CONNECTICUT DEPARTMENT OF TRANSPORTATION PLAN

FOR
REHABILITATION
I-84 TR 803 OVER I-84 WESTBOUND,
ROUTE 7 AND BEAVER BROOK
IN THE CITY OF
DANBURY

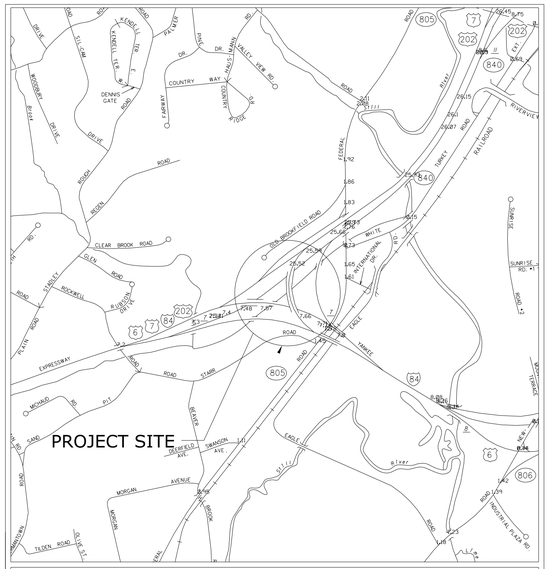

LOCATION PLAN
SCALE IN FEET
1000 0 1000 2000

FROM STA.	283+28.09	TO STA.	293+14.60	LENGTH	986.51 ft.
FROM STA.	-	TO STA.	-	LENGTH	- ft.
FROM STA.	-	TO STA.	-	LENGTH	- ft.
FROM STA.	-	TO STA.	-	LENGTH	- ft.
FROM STA.	-	TO STA.	-	LENGTH	- ft.
FROM STA.	-	TO STA.	-	LENGTH	- ft.

DESIGN SCALES
PLAN 1 in. = 40 ft.
PROFILE HOR. 1 in. = - ft. VERT. 1 in. = - ft.
CROSS SECTIONS 1 in. = - ft.
OTHER SCALES AS NOTED -

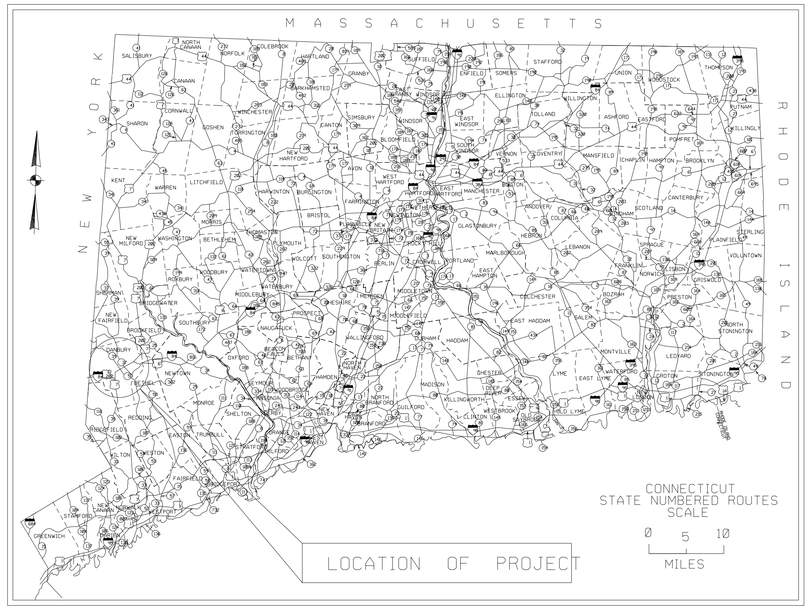

2004 SPECIFICATIONS, FORM 816 GOVERN INCLUDING SUPPLEMENTTHERETO DATED JULY 2010
ALL ELEVATIONS ON THIS PROJECT BASED ON NAVD 88
COORDINATES BASED ON CONNECTICUT COORDINATE SYSTEM NAD83

FEDERAL AID PROJECT NO.	-	TO BE MAINTAINED BY	-	STATE PROJECT NO.	-
FEDERAL AID PROJECT NO.	-	TO BE MAINTAINED BY	-	STATE PROJECT NO.	-
FEDERAL AID PROJECT NO.	-	TO BE MAINTAINED BY	-	STATE PROJECT NO.	-
FEDERAL AID PROJECT NO.	-	TO BE MAINTAINED BY	-	STATE PROJECT NO.	-

LIST OF DRAWING REVISIONS

SHEET NO.	DESCRIPTION	DATE	BY

STANDARD EXISTNG CONVENTIONS

Hedge Row
North Arrow W/No. Coor.
Edge Of Road
Dirt Road
BCLC
Granite Curb
Guide Rail
Concrete Median Barrier
Bit. Walk
Conc. Sidewalk
Railroad Tracks
Chain Link Fence
Rustic Fence
Pipe Fence
Board Fence
Water Edge
Stream
Ditch
TOWN LINE
Grid Arrow
Limit Of Marsh
Stone Wall
Ledge Outcrop
Inland Wetland Limits
STATE LINE
Power Line
Easement Line
Swamp
Building
Transmission Tower
Riprap
Tree Line
Shrub
Evergreen Tree
Deciduous Tree
Retaining Wall
Highway Line
Street Line
Property Line
Lot Line

Border VERSION 10/19/07

LIST OF DRAWINGS

DWG. NO.	SHEET NO.	TITLE	DWG. NO.	SHEET NO.	TITLE
1	1	TITLE SHEET			
EST-1	2	DETAILED ESTIMATE SHEET			
TYP-1	3	TYPICAL SECTIONS			
HWY-1	4	SITE ACCESS PLAN			
SPM-1	5	SIGNING AND PAVEMENT MARKING PLAN			
STR-1	6	GENERAL PLAN			
STR-2	7	TYPICAL SECTION			
STR-3	8	PIERS 1, 2, AND 3 EXISTING CONDITION			
STR-4	9	PIERS 4, 5, AND 6 EXISTING CONDITION			
STR-5	10	PIERS 7, 8, AND 9 EXISTING CONDITION			
STR-6	11	PIERS 10 AND 11 EXISTING CONDITION			
STR-7	12	PIERS 12 AND 13 EXISTING CONDITION			
STR-8	13	ABUTMENTS NO 1 AND 2 EXISTING CONDITION			
STR-9	14	SUBSTRUCTURE REPAIRS - 1 OF 2			
STR-10	15	SUBSTRUCTURE REPAIRS - 2 OF 2			
STR-11	16	DECK SLAB REPAIRS			
STR-11	17	ASPHALTIC PLUG EXP. JOINT SYSTEM			
STR-12	18	BEARING DETAILS			
STR-13	19	PARTIAL CONCRETE HAUNCH REMOVAL			
STR-14	20	WEB REPAIR DETAILS			
TTS-1	21	STANDARD DRAWING			

CONNECTICUT DEPARTMENT OF TRANSPORTATION BIDDING AND OTHER INFORMATION AND DOCUMENTS WHICH ARE OBTAINED THROUGH THE INTERNET WORLD WIDE WEB SITES OR OTHER SOURCES ARE NOT TO BE CONSTRUED TO BE OFFICIAL INFORMATION FOR THE PURPOSES OF BIDDING OR CONDUCTING OTHER BUSINESS WITH THE DEPARTMENT.

IT IS THE RESPONSIBILITY OF EACH BIDDER AND ALL OTHER INTERESTED PARTIES TO OBTAIN ALL BIDDING RELATED INFORMATION AND DOCUMENTS FROM OFFICIAL SOURCES WITHIN THE DEPARTMENT.

PERSONS AND/OR ENTITIES WHICH REPRODUCE AND/OR MAKE SUCH INFORMATION AVAILABLE BY ANY MEANS ARE NOT AUTHORIZED BY THE DEPARTMENT TO DO SO AND MAY BE LIABLE FOR CLAIMS RESULTING FROM THE DISSEMINATION OF UNOFFICIAL, INCOMPLETE AND/OR INACCURATE INFORMATION.

THE DESIGN APPEARS TO CONFORM TO APPLICABLE CRITERIA. APPROVAL IS NOT TO BE CONSTRUED TO MEAN THAT ALL ASPECTS OF THE DESIGN HAVE BEEN PERSONALLY CHECKED BY THE UNDERSIGNED.

SUBMITTED - 2012

TRANSPORTATION PRINCIPAL ENGINEER - TIMOTHY M. WILSON, P.E.

APPROVAL RECOMMENDED - 2012

MANAGER OF STATE DESIGN

APPROVED - 2012

TRANSPORTATION ENGINEERING ADMINISTRATOR (ACTING) - JAMES H. NORMAN, P.E.

TOWN: 90% DESIGN REVIEW

F.H.W.A. REGION NO.	STATE	TOWN	FED. AID PROJ. NO.	PROJ. NO.	YEAR	ROUTE NO.	SHEET NO.	TOTAL SHEETS
1	CT	DANBURY	-	34-334	2012	TR803	1	21

Border Version: 11/14/08

EARTHWORK

ITEM NUMBER	0201001A	0202000	0207000	0209001	0219001	0944000	0953005
ITEM	CLEARING AND GRUBBING	EARTH EXCAVATION	BORROW	FORMATION OF SUBGRADE	SEDIMENTATION CONTROL SYSTEM	FURNISHING AND PLACING TOPSOIL	TURF ESTABLISHMENT
UNIT	LS	C.Y.	C.Y.	S.Y.	L.F.	S.Y.	S.Y.
PROJECT WIDE	1	1084	3170	1765	2230	2570	2570
SUBTOTAL	1	1084	3170	1765	2230	2570	2570
UNASSIGNED							
TOTAL	1	1084	3170	1765	2230	2570	2570

ITEM NUMBER	0202479	0202529	0406010-1	0406010-2	0411000	0503808	0503862A	0511116	0521014A	0601073	0601196	0601318	0601604	0601954	0602006	0603081A	0603147	0603248	0603444	0603802	0707001	0726001	0821127	0821189A	0921201A	0910170	0911923	0912509	0912518	0912531	0918001	0918311	0971001A	0974099
ITEM	REMOVAL OF HMA WEARING SURFACE	CUT BITUMINOUS CONCRETE PAVEMENT	BITUMINOUS CONCRETE, CLASS 1	BITUMINOUS CONCRETE, CLASS 2	ROLLED BANK GRAVEL SURFACE	REMOVAL OF EXISTING STRUCTURAL STEEL	JACKING EXISTING SUPERSTRUCTURE	REPAIR WEEP DRAINS	STEEL-LAMINATED ELASTOMERIC BEARINGS	CLASS "S" CONCRETE	VARIABLE DEPTH PATCH	PARTIAL DEPTH PATCH	ASPHALTIC PLUG EXPANSION JOINT SYSTEM	EPOXY INJECTION CRACK REPAIR	DEFORMED STEEL BARS - EPOXY COATED	REPAIR TO STRUCTURAL STEEL	ABRASIVE BLAST CLEANING AND FIELD PAINTING OF STRUCTURE	CLASS 1 CONTAINMENT AND COLLECTION OF SURFACE PREPARATION DEBRIS	LEAD HEALTH PROTECTION PROGRAM (LHPP)	STRUCTURAL STEEL - SIGN SUPPORTS	MEMBRANE WATERPROOFING (WOVEN GLASS FABRIC)	CRUSHED STONE FOR SLOPE PROTECTION	REMOVAL OF PRECAST CONCRETE BARRIER CURB	CONCRETE BARRIER TRANSITION SECTION	PRECAST CONCRETE BARRIER CURB	METAL BEAM RAIL (TYPE R-B 350)	R-B END ANCHORAGE - TYPE 1	REMOVE THREE CABLE GUIDE RAILING	REMOVE AND RESET METAL BEAM RAIL	REMOVE METAL BEAM RAIL (TYPE R-B 350)	THREE-CABLE GUIDE RAILING I (BEAM POSTS)	END ANCHORAGE - TYPE I	MAINTENANCE AND PROTECTION OF TRAFFIC	REMOVAL OF DETERIORATED CONCRETE
UNIT	S.Y.	L.F.	TON	TON	C.Y.	CWT.	L.S.	EA.	EA.	C.F.	C.F.	C.F.	L.F.	L.F.	LB.	CWT.	L.S.	L.S.	L.S.	CWT.	S.Y.	TON	L.F.	L.F.	L.F.	L.F.	EA.	L.F.	L.F.	L.F.	L.F.	EA.	L.S.	C.F.
PROJECT WIDE	2750	145	240	160	405	165	1	12	70	395	5	45	450	200	3880	3.10	1	1	1	1	2750	211	60	20	40	112.5	2	100	350	225	35	1	1	355
SUBTOTAL	2750	145	240	160	405	165	70	12	70	395	45	450	200	3880	20	1	1	1	1	2750	211	60	20	40	112.5	2	100	350	225	35	1	1	355	725
UNASSIGNED																																		
TOTAL	2750	145	240	160	405	165	70	12	70	395	45	450	200	3880	20	1	1	1	1	2750	211	60	20	40	112.5	2	100	350	225	35	1	1	355	725

ITEM NUMBER	0974105	0976002	0978002	0980001	0981100	1010901A	1130300	1131001A	1200828	1210113	1210114	1220013A	1801319A	1809001
ITEM	CONCRETE HAUNCH REMOVAL	BARRICADE WARNING LIGHTS - HIGH INTENSITY	TRAFFIC DRUM	CONSTRUCTION STAKING	42" TRAFFIC CONE	REMOVE AND RELOCATE HANDHOLE	HIGH MOUNTED INTERNALLY ILLUMINATED FLASHING ARROW	CHANGEABLE MESSAGE SIGN	SIGN FACE - SHEET ALUMINUM I TYPE III REFLECTIVE SHEETING	6" WHITE TYPE I EPOXY RESIN PAVEMENT MARKINGS	6" YELLOW TYPE I EPOXY RESIN PAVEMENT MARKINGS	CONSTRUCTION SIGNS - BRIGHT FLUORESCENT SHEETING	TYPE NC IMPACT ATTENUATION SYSTEM	REMOVE IMPACT ATTENUATION DEVICE (SAND INTERNAL BARRIER MODULE)
UNIT	L.F.	DAY	EA.	L.S.	EA.	EA.	DAY	DAY	S.F.	L.F.	L.F.	S.F.	EA.	EA.
PROJECT WIDE	725	8820	259	1	259	1	930	930	10	890	890	912	1	1
SUBTOTAL	8820	259	1	259	1	930	930	20	890	890	912	1	1	
UNASSIGNED														
TOTAL	8820	259	1	259	1	930	930	20	890	890	912	1	1	

P = FEDERAL AID PARTICIPATING
NP = FEDERAL AID NON PARTICIPATING
= FOR ITERNAL USE ONLY
NOT A LEGAL DEFINITION

90% DESIGN REVIEW

REV.	DATE	REVISION DESCRIPTION	SHEET NO.
-	-	-	-
-	-	-	-
-	-	-	-
-	-	-	-
-	-	-	-
-	-	-	-

THE INFORMATION, INCLUDING ESTIMATED QUANTITIES OF WORK, SHOWN ON THESE SHEETS IS BASED ON LIMITED INVESTIGATIONS BY THE STATE AND IS IN NO WAY WARRANTED TO INDICATE THE CONDITIONS OF ACTUAL QUANTITIES OF WORK WHICH WILL BE REQUIRED.

Plotted Date: 12/17/2012

DESIGNER/DRAFTER: K. YUEN
CHECKED BY: W. VARRELL
SCALE AS NOTED

STATE OF CONNECTICUT
DEPARTMENT OF TRANSPORTATION

Filename: $FILEA$

SIGNATURE/BLOCK: OFFICE OF ENGINEERING
APPROVED BY: DATE:

PROJECT TITLE: TR 803 OVER I-84., U.S. 7 N.B. AND BEAVER BROOK

TOWN: DANBURY

DRAWING TITLE: DETAILED ESTIMATE SHEET

PROJECT NO. 34-334
DRAWING NO. EST-1
SHEET NO. 2

Border Version: 11/14/08

LEGEND:

Ⓐ 8" ROLLED GRAVEL BASE

Ⓑ 4" TOP SOIL AND TURF ESTABLISHMENT

Ⓒ 6" CRUSHED STONE FOR SLOPE PROTECTION AT 1.5:1 SLOPE

NOTES:

1. SEE SITE ACCESS PLAN FOR GUIDERAIL.
2. SLOPES WITH "FURNISHING AND PLACING TOP SOIL" TO HAVE 4" THICK TOPSOIL.

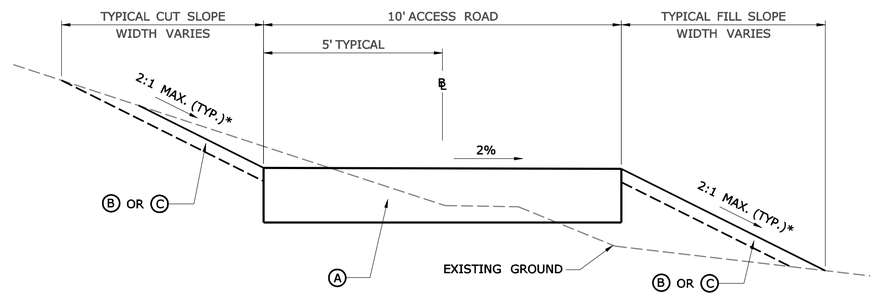

TYPICAL ACCESS ROAD

NOT TO SCALE

* 1.5:1 SLOPE MAY BE USED IN AREAS OF STEEP SLOPES WITH APPROVAL OF THE ENGINEER OR AS SHOWN ON THE PLAN AT LOCATIONS WITH CRUSHED STONE FOR SLOPE PROTECTION.

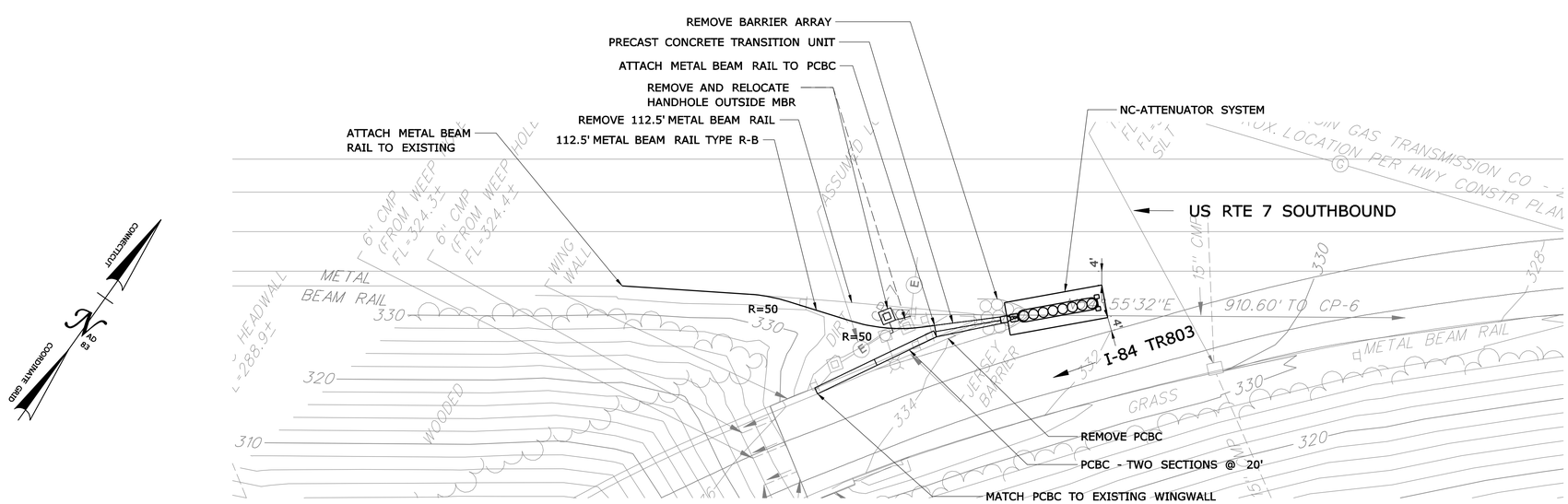

NC-IMPACT ATTENUATOR LOCATION DETAIL

SCALE: 1"=20'

90% DESIGN REVIEW

REV.	DATE	REVISION DESCRIPTION	SHEET NO.
-	-	-	-
-	-	-	-
-	-	-	-
-	-	-	-
-	-	-	-
-	-	-	-

THE INFORMATION, INCLUDING ESTIMATED QUANTITIES OF WORK, SHOWN ON THESE SHEETS IS BASED ON LIMITED INVESTIGATIONS BY THE STATE AND IS IN NO WAY WARRANTED TO INDICATE THE CONDITIONS OF ACTUAL QUANTITIES OF WORK WHICH WILL BE REQUIRED.

Plotted Date: 9/6/2012

DESIGNER/DRAFTER: **E. BUCKLEY**

CHECKED BY: **J. KEEFE**

SCALE AS NOTED

STATE OF CONNECTICUT
DEPARTMENT OF TRANSPORTATION

Filename: ...\Highways\HW_MSH_34_334_TYP.dgn

SIGNATURE/
BLOCK:

PROJECT TITLE:
TR 803 OVER I-84 W.B., U.S. 7 N.B. AND BEAVER BROOK

TOWN: **DANBURY**

DRAWING TITLE: **TYPICAL SECTIONS**

PROJECT NO. **34-334**

DRAWING NO. **TYP-1**

SHEET NO. **3**

Border Version: 11/14/08

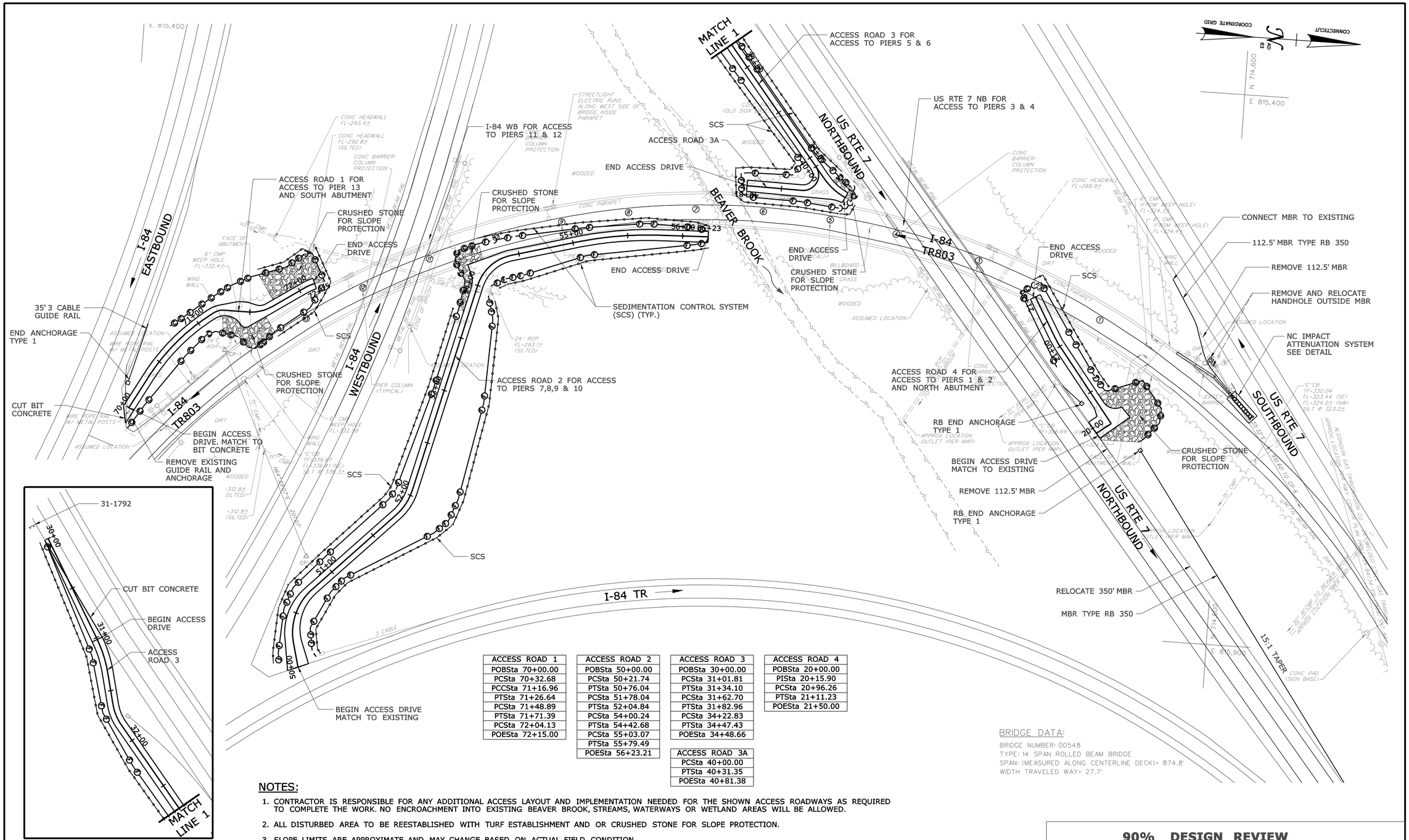

ACCESS ROAD 1
POBSta 70+00.00
PCSta 70+32.68
PCCSta 71+16.96
PTSta 71+26.64
PCSta 71+48.89
PTSta 71+71.39
PCSta 72+04.13
POESta 72+15.00

ACCESS ROAD 2
POBSta 50+00.00
PCSta 50+21.74
PTSta 50+76.04
PCSta 51+78.04
PTSta 52+04.84
PCSta 54+00.24
PTSta 54+42.68
PCSta 55+03.07
PTSta 55+79.49
POESta 56+23.21

ACCESS ROAD 3
POBSta 30+00.00
PCSta 31+01.81
PTSta 31+34.10
PCSta 31+62.70
PTSta 31+82.96
PCSta 34+22.83
PTSta 34+47.43
POESta 34+48.66

ACCESS ROAD 3A
PCSta 40+00.00
PTSta 40+31.35
POESta 40+81.38

ACCESS ROAD 4
POBSta 20+00.00
PISta 20+15.90
PCSta 20+96.26
PTSta 21+11.23
POESta 21+50.00

BRIDGE DATA:

BRIDGE NUMBER: 00548
TYPE: 14 SPAN ROLLED BEAM BRIDGE
SPAN: (MEASURED ALONG CENTERLINE DECK)= 874.8'
WIDTH TRAVELED WAY= 27.7'

NOTES:

1. CONTRACTOR IS RESPONSIBLE FOR ANY ADDITIONAL ACCESS LAYOUT AND IMPLEMENTATION NEEDED FOR THE SHOWN ACCESS ROADWAYS AS REQUIRED TO COMPLETE THE WORK. NO ENCROACHMENT INTO EXISTING BEAVER BROOK, STREAMS, WATERWAYS OR WETLAND AREAS WILL BE ALLOWED.
2. ALL DISTURBED AREA TO BE REESTABLISHED WITH TURF ESTABLISHMENT AND OR CRUSHED STONE FOR SLOPE PROTECTION.
3. SLOPE LIMITS ARE APPROXIMATE AND MAY CHANGE BASED ON ACTUAL FIELD CONDITION.

90% DESIGN REVIEW

REV.	DATE	REVISION DESCRIPTION	SHEET NO.
-	-	-	-
-	-	-	-
-	-	-	-
-	-	-	-
-	-	-	-
-	-	-	-

THE INFORMATION, INCLUDING ESTIMATED QUANTITIES OF WORK, SHOWN ON THESE SHEETS IS BASED ON LIMITED INVESTIGATIONS BY THE STATE AND IS IN NO WAY WARRANTED TO INDICATE THE CONDITIONS OF ACTUAL QUANTITIES OF WORK WHICH WILL BE REQUIRED.

Plotted Date: 9/7/2012

DESIGNER/DRAFTER: **E. BUCKLEY**
CHECKED BY: **J. KEEFE**
SCALE IN FEET 0 40 80
SCALE 1"=40'

STATE OF CONNECTICUT
DEPARTMENT OF TRANSPORTATION

Filename: ...\Highways\HW_MSH_34_334_PLN.dgn

SIGNATURE/ BLOCK:

PROJECT TITLE: **TR 803 OVER I-84 W.B., U.S. 7 N.B. AND BEAVER BROOK**

TOWN: **DANBURY**

DRAWING TITLE: **SITE ACCESS PLAN**

PROJECT NO. **34-334**
DRAWING NO. **HWY-1**
SHEET NO. **5**

Border Version: 11/14/08

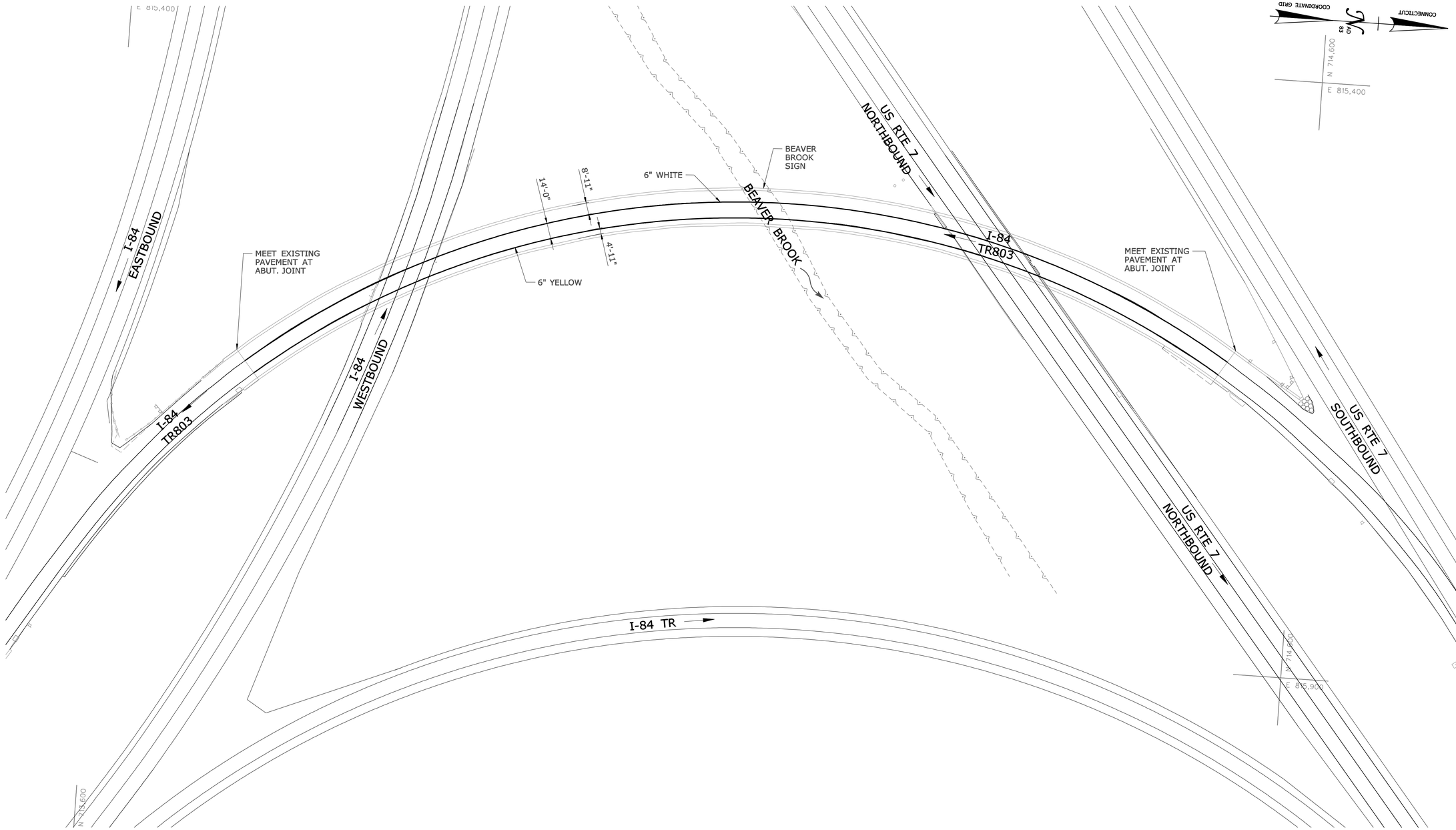

90% DESIGN REVIEW

REV.	DATE	REVISION DESCRIPTION	SHEET NO.
-	-	-	-
-	-	-	-
-	-	-	-
-	-	-	-
-	-	-	-
-	-	-	-

THE INFORMATION, INCLUDING ESTIMATED QUANTITIES OF WORK, SHOWN ON THESE SHEETS IS BASED ON LIMITED INVESTIGATIONS BY THE STATE AND IS IN NO WAY WARRANTED TO INDICATE THE CONDITIONS OF ACTUAL QUANTITIES OF WORK WHICH WILL BE REQUIRED.

Plotted Date: 9/12/2012

DESIGNER/DRAFTER: **K. YUEN**

CHECKED BY: **W. VARRELL**

SCALE IN FEET

0 40 80

SCALE 1"=40'

STATE OF CONNECTICUT
DEPARTMENT OF TRANSPORTATION

Filename: ...\Highways\HW_MSH_34_334_TRM.dgn

SIGNATURE/
BLOCK:

PROJECT TITLE:
TR 803 OVER I-84 W.B., U.S. 7 N.B. AND BEAVER BROOK

TOWN:
TOWN OF DANBURY

DRAWING TITLE:
SIGNING AND PAVEMENT MARKING PLAN

PROJECT NO. **34-334**

DRAWING NO. **SPM-1**

SHEET NO. **6**

Border Version: 11/14/08

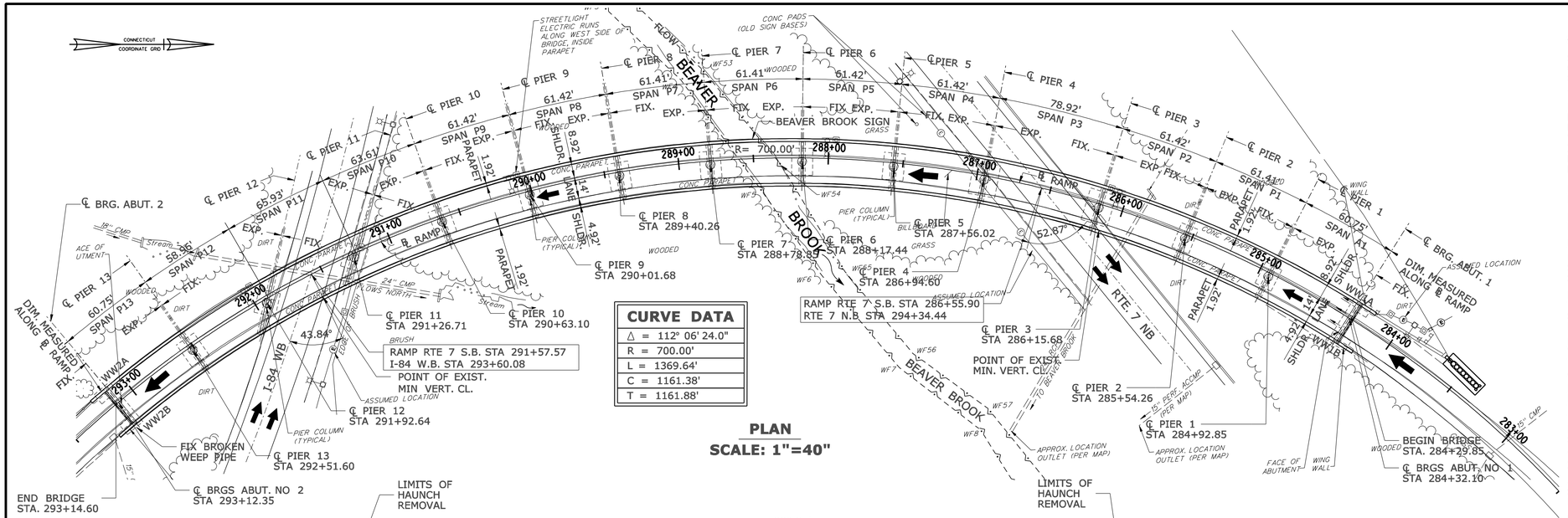

PLAN
SCALE: 1"=40"

ELEVATION
SCALE: 1"=40"

CURVE DATA
Δ = 112° 06' 24.0"
R = 700.00'
L = 1369.64'
C = 1161.38'
T = 1161.88'

GENERAL NOTES:

SPECIFICATIONS:
CONNECTICUT DEPARTMENT OF TRANSPORTATION FORM 816 (2004), SUPPLEMENTAL SPECIFICATION, DATED JULY 2010, AND SPECIAL PROVISIONS.

DESIGN SPECIFICATIONS:
EXPANSION BEARINGS HAVE BEEN DESIGNED PER AASHTO LRFD BRIDGE DESIGN SPECIFICATIONS (5th EDITION), WITH THE INTERIM SPECIFICATIONS UP TO AND INCLUDING 2010, AS SUPPLEMENTED BY THE CONNECTICUT DEPARTMENT OF TRANSPORTATION BRIDGE DESIGN MANUAL (2003) U.S. CUSTOMARY UNITS.

LIVE LOAD:
HL-93

FUTURE PAVING ALLOWANCE:
NONE

PAINT:
PAINT SHALL CONFORM TO THE REQUIREMENTS OF THE STANDARD SPECIFICATIONS, FORM 816 WITH ALL SUPPLEMENT FORMS THROUGH JULY 2012.

BITUMINOUS CONCRETE OVERLAY:
THIS SHALL CONSIST OF TWO LIFTS. THE FIRST LIFT SHALL BE HMA (1" THICK) AND THE SECOND SHALL BE HMA (1 ½" THICK).

DIMENSIONS:
WHEN DECIMAL DIMENSIONS ARE GIVEN TO LESS THAN THREE DECIMAL PLACES, THE OMITTED DIGITS SHALL BE ASSUMED ZEROS.

EXISTING DIMENSIONS:
DIMENSIONS OF THE EXISTING STRUCTURE SHOWN ON THESE PLANS ARE FOR GENERAL REFERENCE ONLY. THEY HAVE BEEN TAKEN FROM THE ORIGINAL DESIGN DRAWINGS AND ARE NOT GUARANTEED. THE CONTRACTOR SHALL TAKE ALL FIELD MEASUREMENTS NECESSARY TO ASSURE PROPER FIT OF THE FINISHED WORK AND SHALL ASSUME FULL RESPONSIBILITY FOR THEIR ACCURACY. WHEN SHOP DRAWINGS BASED ON FIELD MEASUREMENTS ARE SUBMITTED FOR APPROVAL, THE FIELD MEASUREMENTS SHALL ALSO BE SUBMITTED FOR REFERENCE BY THE REVIEWER.

CLASS 'S' CONCRETE
CLASS 'S' CONCRETE SHALL BE USED FOR PATCHING SUBSTRUCTURE ELEMENTS GREATER THAN 1½" THICK.

JOINT SEAL:
SEE SPECIAL PROVISIONS.

EXPOSED EDGES:
EXPOSED EDGES OF CONCRETE SHALL BE BEVELED 1" x 1" UNLESS DIMENSIONED OTHERWISE.

CONCRETE COVER:
ALL REINFORCEMENT SHALL HAVE 2" OF COVER UNLESS DIMENSIONED OTHERWISE.

REINFORCEMENT:
ALL REINFORCEMENT SHALL BE EPOXY COATED ASTM A615 GRADE 60. EPOXY COATING SHALL CONFORM TO ASTM A775.

CONSTRUCTION JOINTS:
CONSTRUCTION JOINTS OTHER THAN THOSE SHOWN ON THE PLANS, WILL NOT BE PERMITTED WITHOUT THE PRIOR APPROVAL OF THE ENGINEER.

TRAFFIC
ALL WORK SHALL BE DONE IN ACCORDANCE WITH THE SPECIAL PROVISIONS ARTICLE 1.08.04 - PROSECUTION AND PROGRESS - LIMITATION OF OPERATIONS AND FOR ITEM NO. 0971001A - MAINTENANCE AND PROTECTION OF TRAFFIC.

NOTICE TO BRIDGE INSPECTORS

THE DEPARTMENT'S BRIDGE SAFETY PROCEDURES REQUIRE THIS BRIDGE TO BE INSPECTED FOR, BUT NOT LIMITED TO, ALL APPROPRIATE COMPONENTSINDICATED IN THE GOVERNING MANUALS FOR BRIDGE INSPECTION. ATTENTIONMUST BE GIVEN TO INSPECTING THE FOLLOWING SPECIAL COMPONENTS AND DETAILS. (THE LISTING FOR COMPONENTS FOR SPECIFIC ATTENTION SHALLNOT BE CONSTRUED TO REDUCE THE IMPORTANCE OF INSPECTION OF ANYOTHER COMPONENT OF THE STRUCTURE). THE FREQUENCY OF INSPECTION OF THIS STRUCTURE SHALL BE IN ACCORDANCE WITH THE GOVERNING MANUALS FOR BRIDGE INSPECTION, UNLESS OTHERWISE DIRECTED BY THE MANAGER OF BRIDGE SAFETY AND EVALUATION.

COMPONENT OR DETAIL	STRUCTURE SHEET REFERENCE
NONE	-

CONCRETE DISTRIBUTION		
SUPERSTRUCTURE	C.Y.	82
SUBSTRUCTURE	C.Y.	313
FOOTINGS	C.Y.	0
TOTAL	C.Y.	395

INSPECTION OF FIELD WELDS		
METHODS	UNIT	QUANTITY
ULTRASONIC	INCH	XX
MAGNETIC PARTICLE	FEET	NONE

TRANSPORTATION DIMENSION AND WEIGHT				
MEMBER	SHIPPING LENGTH	SHIPPING HEIGHT	SHIPPING WIDTH	SHIPPING WEIGHT

90% DESIGN REVIEW

REV.	DATE	REVISION DESCRIPTION	SHEET NO.
-	-	-	-
-	-	-	-
-	-	-	-
-	-	-	-
-	-	-	-
-	-	-	-

THE INFORMATION, INCLUDING ESTIMATED QUANTITIES OF WORK, SHOWN ON THESE SHEETS IS BASED ON LIMITED INVESTIGATIONS BY THE STATE AND IS IN NO WAY WARRANTED TO INDICATE THE CONDITIONS OF ACTUAL QUANTITIES OF WORK WHICH WILL BE REQUIRED.

Plotted Date: 9/11/2012

DESIGNER/DRAFTER: **K. YUEN**
CHECKED BY: **W. VARRELL**
SCALE AS NOTED

STATE OF CONNECTICUT
DEPARTMENT OF TRANSPORTATION

Filename: ...\SB_MSH_GPN_034_334.dgn

SIGNATURE/ BLOCK:
OFFICE OF ENGINEERING
APPROVED BY: DATE:

PROJECT TITLE:
TR 803 OVER I-84 W.B., U.S. 7 N.B. AND BEAVER BROOK

TOWN: **DANBURY**
DRAWING TITLE: **GENERAL PLAN**

PROJECT NO. **34-334**
DRAWING NO. **STR-1**
SHEET NO. **7**

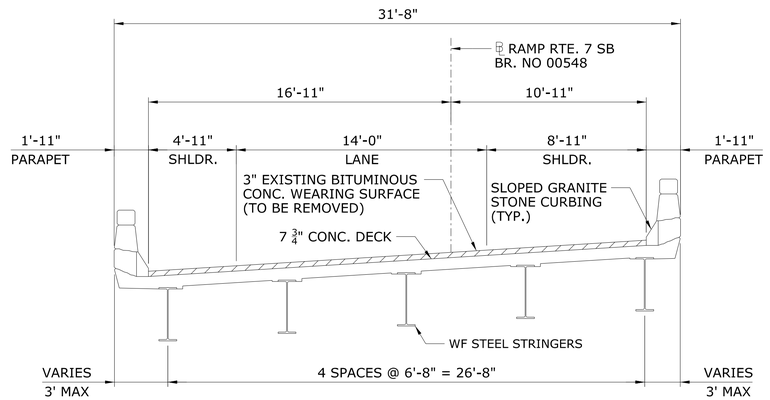

EXISTING BRIDGE SECTION
SCALE: 1/4" = 1'-0"

BRIDGE QUANTITIES

ITEM	UNIT	TOTAL
REMOVAL OF HMA WEARING SURFACE	S.Y.	2750
BITUMINOUS CONCRETE, CLASS 1	TON	240
BITUMINOUS CONCRETE, CLASS 2	TON	160
JACKING FOR BEARING REPLACEMENT	EA.	70
REMOVAL OF EXISTING STRUCTURAL STEEL	C.W.T.	165
REPAIR WEEP DRAINS	EA.	12
STEEL-LAMINATED ELASTOMERIC BEARINGS	EA.	70
CLASS "S" CONCRETE	C.Y.	395
PARTIAL DEPTH PATCH	C.Y.	45
VARIABLE DEPTH PATCH	C.Y.	5
ASPHALTIC PLUG EXPANSION JOINT SYSTEM	L.F.	450
EPOXY INJECTION CRACK REPAIR	L.F.	200
DEFORMED STEEL BARS - EPOXY COATED	LB.	3880
REPAIR TO STRUCTURAL STEEL	C.W.T.	3.1
ABRASIVE BLAST CLEANING AND FIELD PAINTING OF STRUCTURE	L.S.	1
CLASS 1 CONTAINMENT AND COLLECTION OF SURFACE PREPARATION DEBRIS	L.S.	1
LEAD HEALTH PROTECTION PROGRAM (LHPP)	L.S.	1
MEMBRANE WATERPROOFING (WOVEN GLASS FABRIC)	S.Y.	2750
REMOVAL OF DETERIORATED CONCRETE	C.F.	355
CONCRETE HAUNCH REMOVAL	L.F.	725
SIGN SUPPORT	L.S.	1

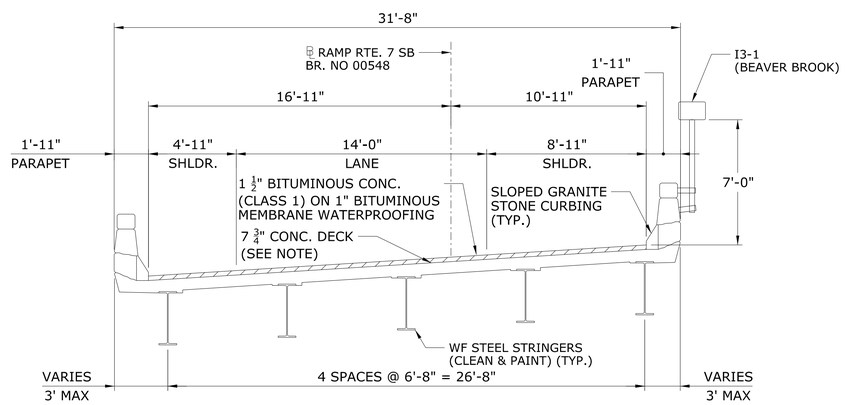

PROPSED BRIDGE SECTION
SCALE: 1/4" = 1'-0"

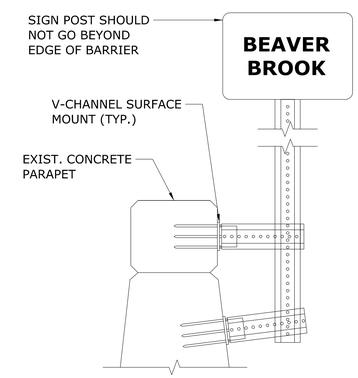

SIGN SUPPORT
SCALE: 1" = 1'-0"

90% DESIGN REVIEW

REV.	DATE	REVISION DESCRIPTION	SHEET NO.
-	-	-	-
-	-	-	-
-	-	-	-
-	-	-	-
-	-	-	-
-	-	-	-

THE INFORMATION, INCLUDING ESTIMATED QUANTITIES OF WORK, SHOWN ON THESE SHEETS IS BASED ON LIMITED INVESTIGATIONS BY THE STATE AND IS IN NO WAY WARRANTED TO INDICATE THE CONDITIONS OF ACTUAL QUANTITIES OF WORK WHICH WILL BE REQUIRED.

Plotted Date: 12/14/2012

DESIGNER/DRAFTER: K. YUEN
CHECKED BY: W. VARRELL
SCALE AS NOTED

STATE OF CONNECTICUT
DEPARTMENT OF TRANSPORTATION

Filename: $FILEA$

SIGNATURE/BLOCK: OFFICE OF ENGINEERING
APPROVED BY: DATE:

PROJECT TITLE: TR 803 OVER I-84., U.S. 7 N.B. AND BEAVER BROOK

TOWN: DANBURY

DRAWING TITLE: TYPICAL SECTION

PROJECT NO. 34-334
DRAWING NO. STR-2
SHEET NO. 7

Border Version: 11/14/08

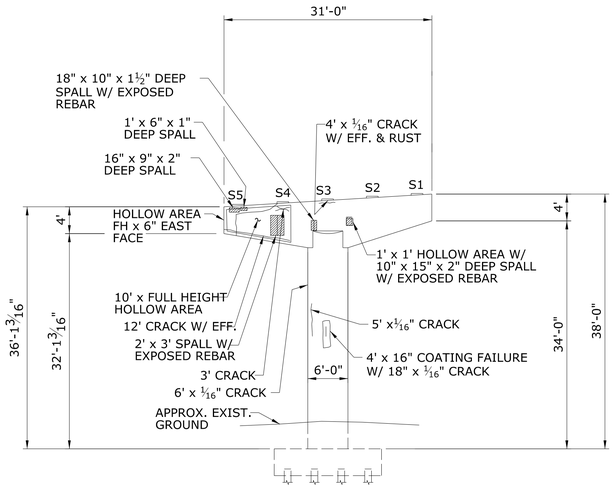

PIER 1 NORTH ELEVATION

SCALE: 3/32" = 1'-0"

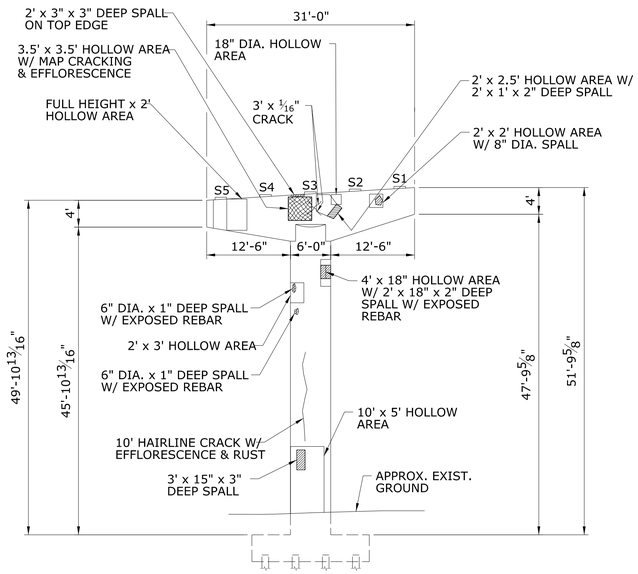

PIER 2 NORTH ELEVATION

SCALE: 3/32" = 1'-0"

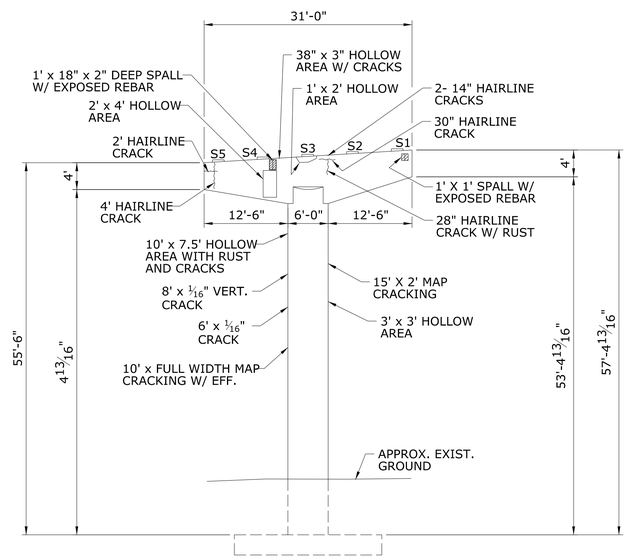

PIER 3 NORTH ELEVATION

SCALE: 3/32" = 1'-0"

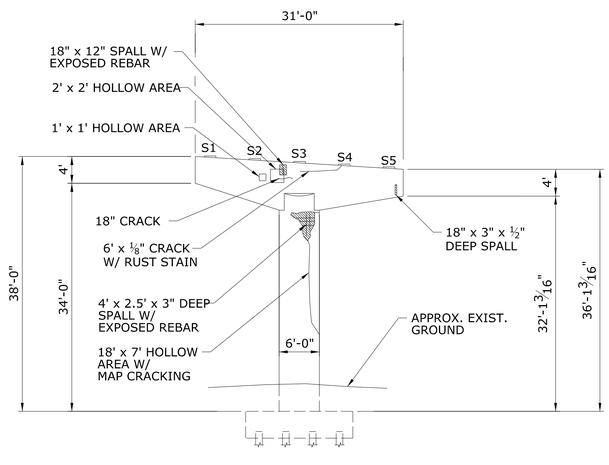

PIER 1 SOUTH ELEVATION

SCALE: 3/32" = 1'-0"

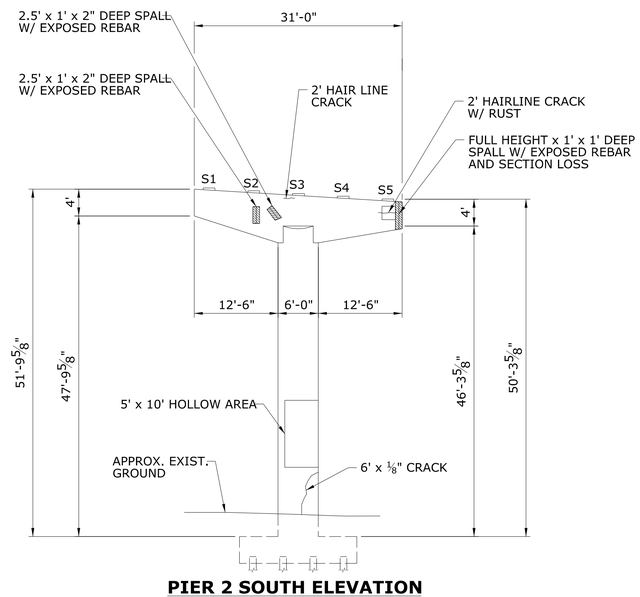

PIER 2 SOUTH ELEVATION

SCALE: 3/32" = 1'-0"

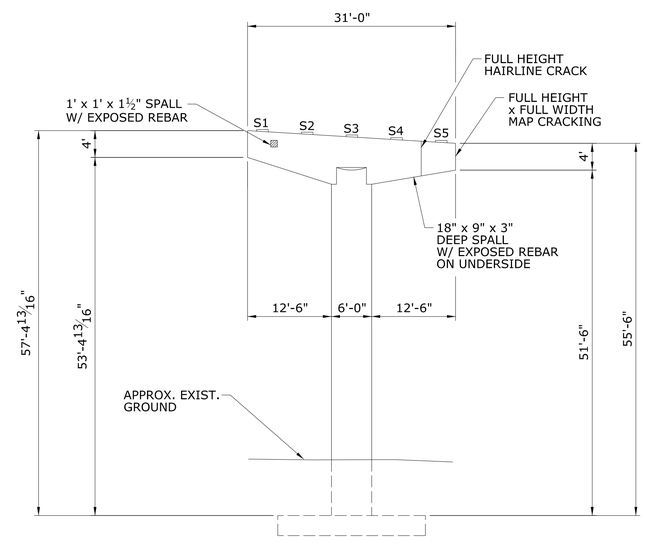

PIER 3 SOUTH ELEVATION

SCALE: 3/32" = 1'-0"

90% DESIGN REVIEW

REV.	DATE	REVISION DESCRIPTION	SHEET NO.
-	-	-	-
-	-	-	-
-	-	-	-
-	-	-	-
-	-	-	-
-	-	-	-

THE INFORMATION, INCLUDING ESTIMATED QUANTITIES OF WORK, SHOWN ON THESE SHEETS IS BASED ON LIMITED INVESTIGATIONS BY THE STATE AND IS IN NO WAY WARRANTED TO INDICATE THE CONDITIONS OF ACTUAL QUANTITIES OF WORK WHICH WILL BE REQUIRED.

Plotted Date: 12/14/2012

DESIGNER/DRAFTER: K. YUEN

CHECKED BY: W. VARRELL

SCALE AS NOTED

STATE OF CONNECTICUT
DEPARTMENT OF TRANSPORTATION

Filename: $FILEA$

SIGNATURE/BLOCK: OFFICE OF ENGINEERING

APPROVED BY: DATE:

PROJECT TITLE: TR 803 OVER I-84., U.S. 7 N.B. AND BEAVER BROOK

TOWN: DANBURY

DRAWING TITLE: PIERS 1,2 AND 3 EXISTING CONDITION

PROJECT NO. 34-334

DRAWING NO. STR-3

SHEET NO. 8

Border Version: 11/14/08

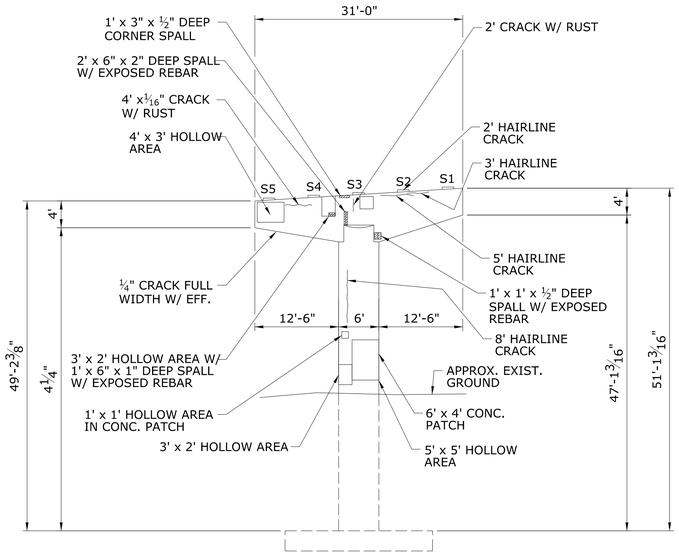

PIER 4 NORTH ELEVATION

SCALE: 3/32" = 1'-0"

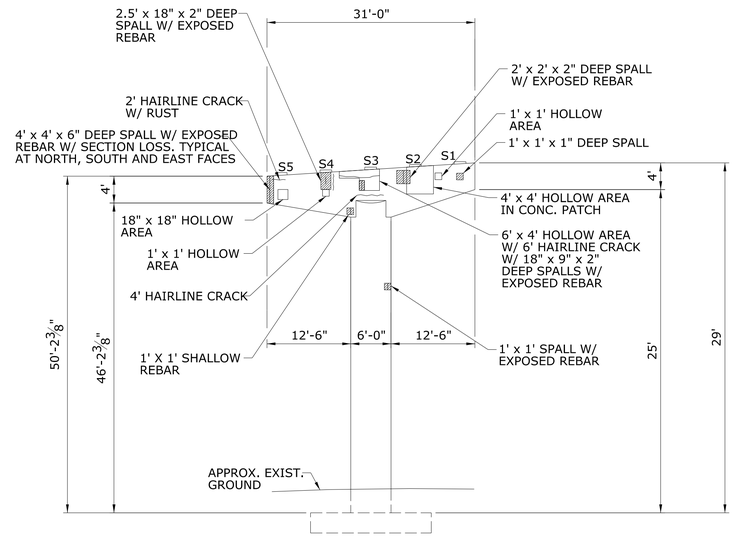

PIER 5 NORTH ELEVATION

SCALE: 3/32" = 1'-0"

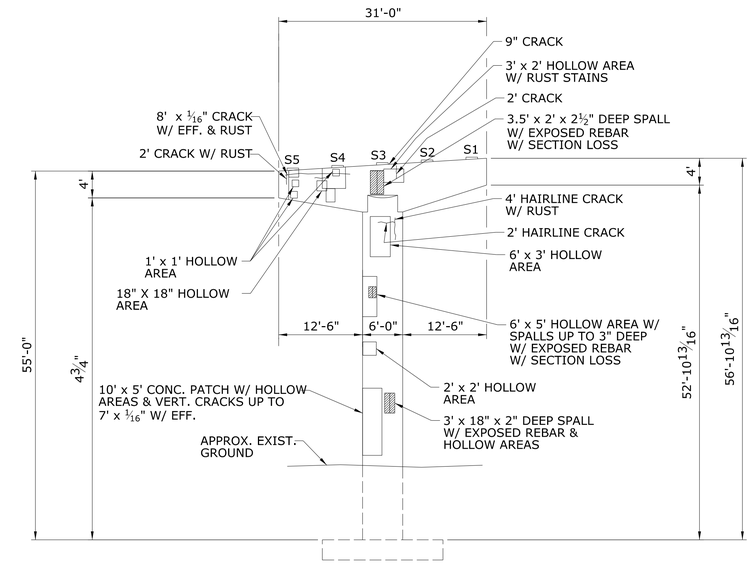

PIER 6 NORTH ELEVATION

SCALE: 3/32" = 1'-0"

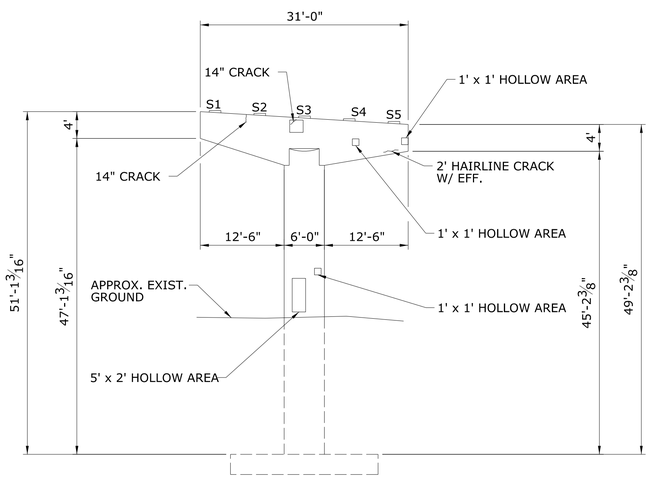

PIER 4 SOUTH ELEVATION

SCALE: 3/32" = 1'-0"

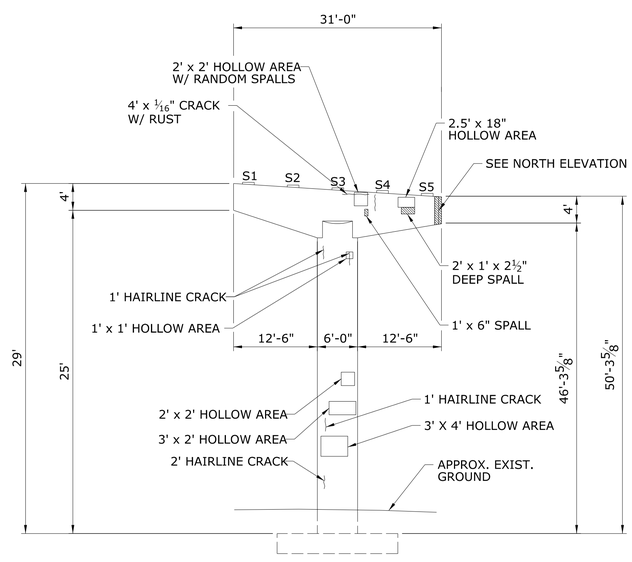

PIER 5 SOUTH ELEVATION

SCALE: 3/32" = 1'-0"

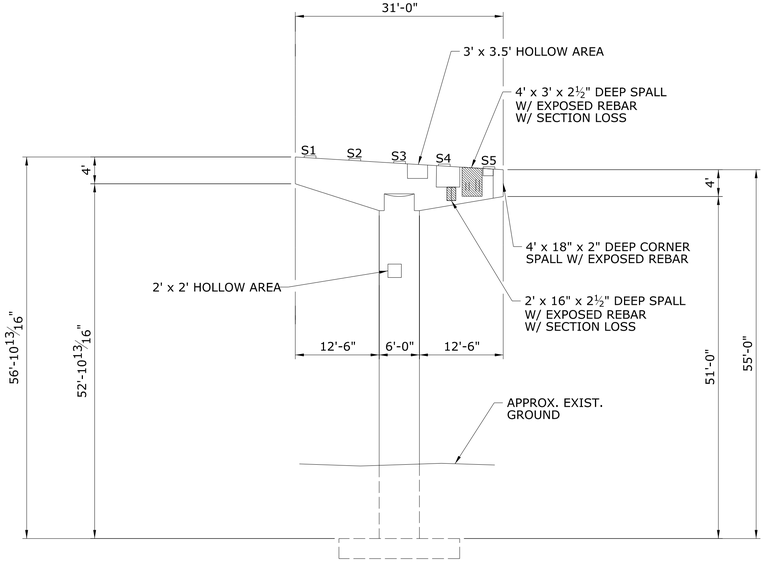

PIER 6 SOUTH ELEVATION

SCALE: 3/32" = 1'-0"

90% DESIGN REVIEW

REV.	DATE	REVISION DESCRIPTION	SHEET NO.
-	-	-	-
-	-	-	-
-	-	-	-
-	-	-	-
-	-	-	-
-	-	-	-

THE INFORMATION, INCLUDING ESTIMATED QUANTITIES OF WORK, SHOWN ON THESE SHEETS IS BASED ON LIMITED INVESTIGATIONS BY THE STATE AND IS IN NO WAY WARRANTED TO INDICATE THE CONDITIONS OF ACTUAL QUANTITIES OF WORK WHICH WILL BE REQUIRED.

Plotted Date: 12/14/2012

DESIGNER/DRAFTER: K. YUEN
CHECKED BY: W. VARRELL
SCALE IN FEET
~~SCALE AS NOTED~~
0 40 80
SCALE 1"=40'

STATE OF CONNECTICUT
DEPARTMENT OF TRANSPORTATION

Filename: $FILEA$

SIGNATURE/ BLOCK:
OFFICE OF ENGINEERING
APPROVED BY: DATE:

PROJECT TITLE:
TR 803 OVER I-84.,
U.S. 7 N.B. AND BEAVER BROOK

TOWN: DANBURY

DRAWING TITLE:
PIERS 4,5 AND 6
EXISTING CONDITION

PROJECT NO. 34-334
DRAWING NO. STR-4
SHEET NO. 9

Border Version: 11/14/08

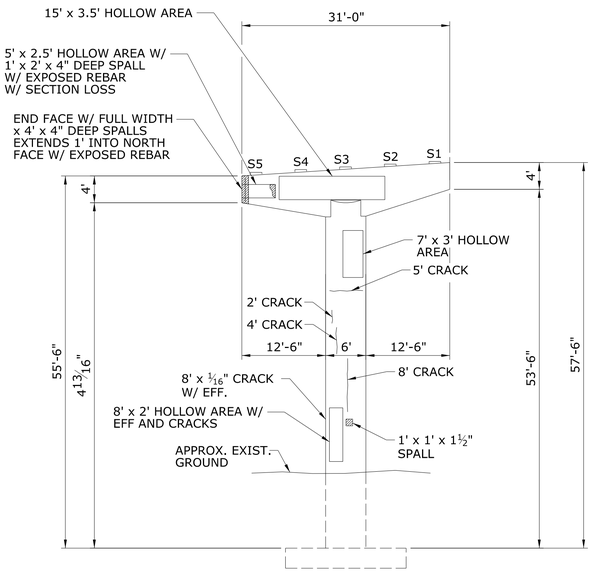

PIER 7 NORTH ELEVATION
SCALE: 3/32" = 1'-0"

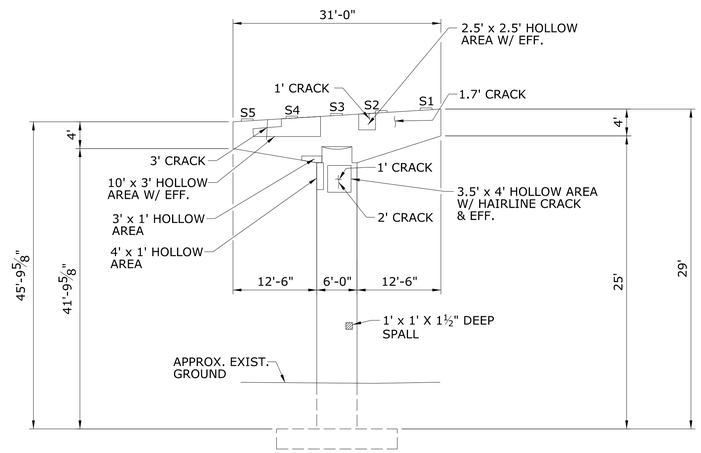

PIER 8 NORTH ELEVATION
SCALE: 3/32" = 1'-0"

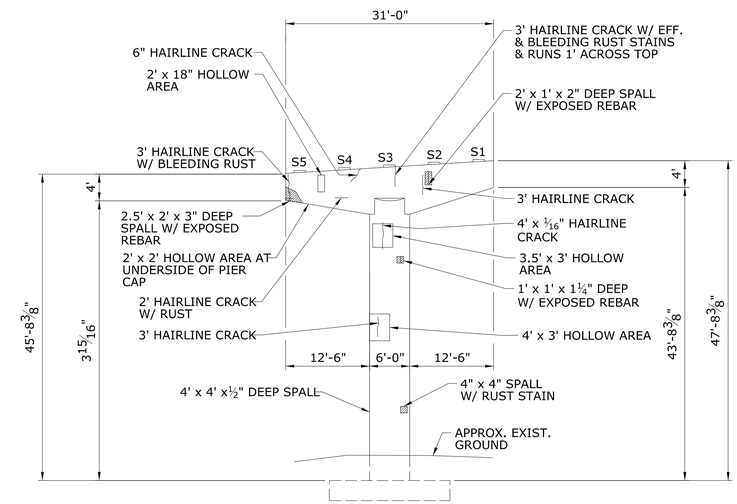

PIER 9 NORTH ELEVATION
SCALE: 3/32" = 1'-0"

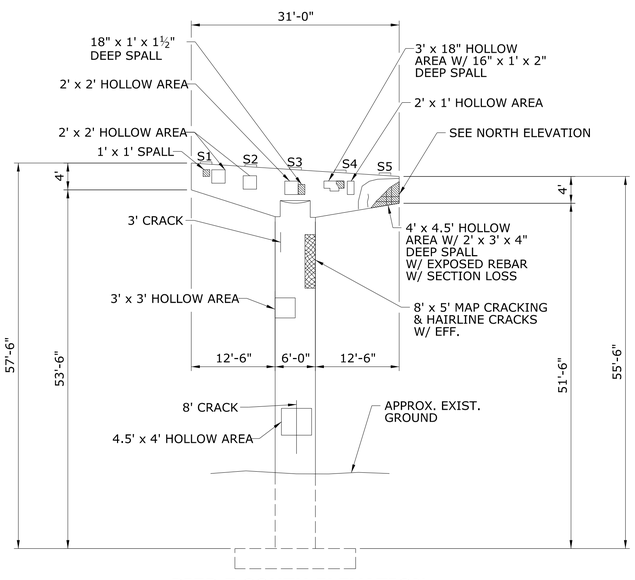

PIER 7 SOUTH ELEVATION
SCALE: 3/32" = 1'-0"

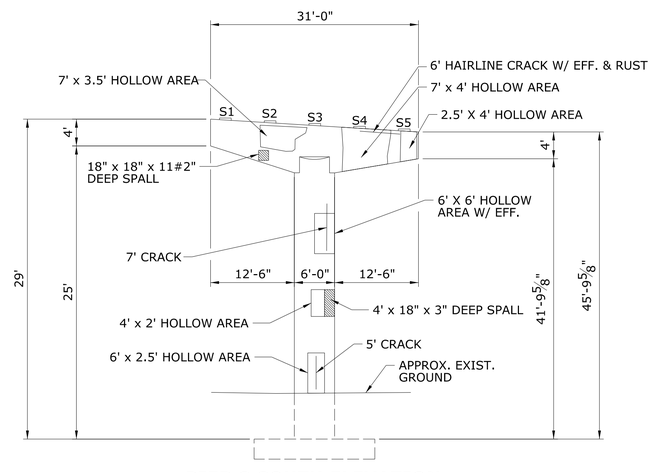

PIER 8 SOUTH ELEVATION
SCALE: 3/32" = 1'-0"

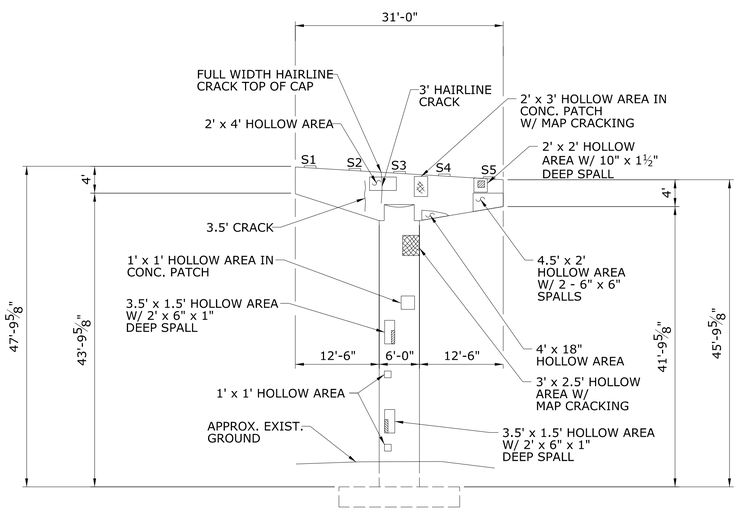

PIER 9 SOUTH ELEVATION
SCALE: 3/32" = 1'-0"

90% DESIGN REVIEW

REV.	DATE	REVISION DESCRIPTION	SHEET NO.
-	-	-	-
-	-	-	-
-	-	-	-
-	-	-	-
-	-	-	-
-	-	-	-

THE INFORMATION, INCLUDING ESTIMATED QUANTITIES OF WORK, SHOWN ON THESE SHEETS IS BASED ON LIMITED INVESTIGATIONS BY THE STATE AND IS IN NO WAY WARRANTED TO INDICATE THE CONDITIONS OF ACTUAL QUANTITIES OF WORK WHICH WILL BE REQUIRED.

Plotted Date: 12/14/2012

DESIGNER/DRAFTER: K. YUEN
CHECKED BY: W. VARRELL
SCALE AS NOTED

STATE OF CONNECTICUT
DEPARTMENT OF TRANSPORTATION

Filename: $FILEA$

SIGNATURE/BLOCK: OFFICE OF ENGINEERING
APPROVED BY: DATE:

PROJECT TITLE: TR 803 OVER I-84., U.S. 7 N.B. AND BEAVER BROOK

TOWN: DANBURY

DRAWING TITLE: PIERS 7,8 and 9 EXISTING CONDITION

PROJECT NO. 34-334
DRAWING NO. STR-5
SHEET NO. 10

Border Version: 11/14/08

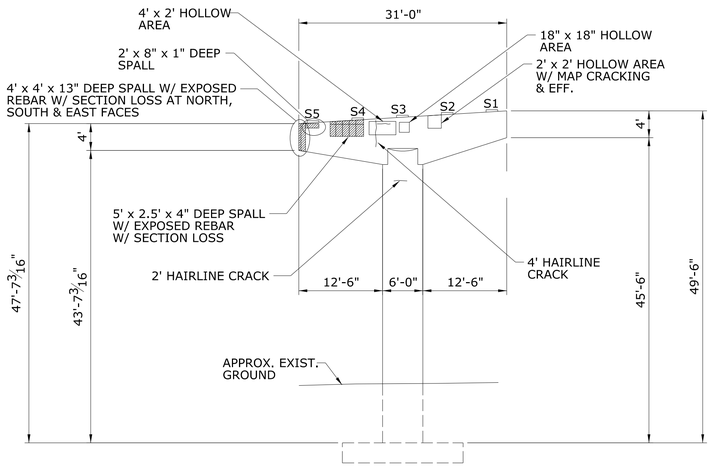

PIER 10 NORTH ELEVATION

SCALE: 3/32" = 1'-0"

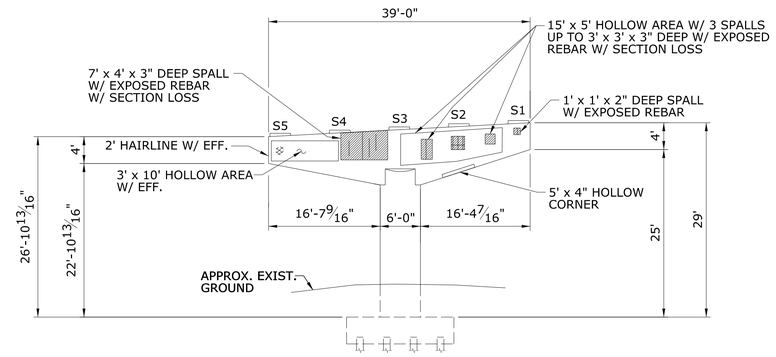

PIER 11 NORTH ELEVATION

SCALE: 3/32" = 1'-0"

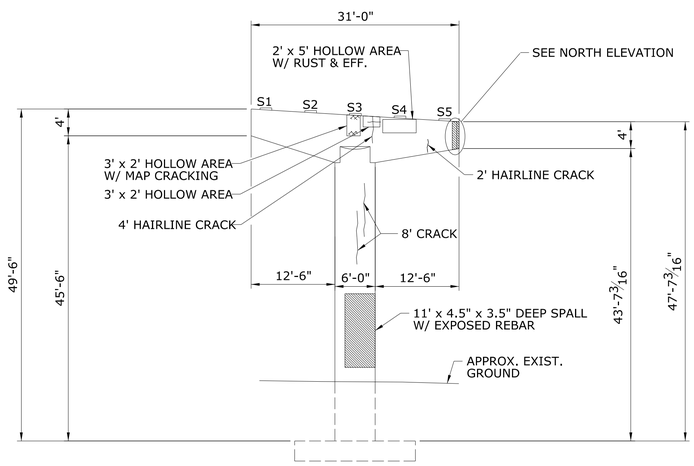

PIER 10 SOUTH ELEVATION

SCALE: 3/32" = 1'-0"

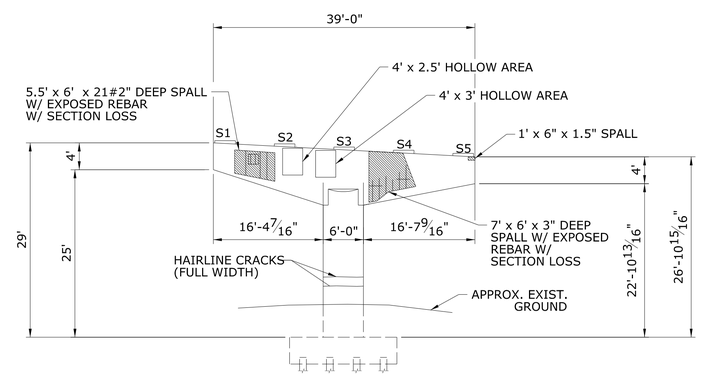

PIER 11 SOUTH ELEVATION

SCALE: 3/32" = 1'-0"

90% DESIGN REVIEW

REV.	DATE	REVISION DESCRIPTION	SHEET NO.
-	-	-	-
-	-	-	-
-	-	-	-
-	-	-	-
-	-	-	-
-	-	-	-

THE INFORMATION, INCLUDING ESTIMATED QUANTITIES OF WORK, SHOWN ON THESE SHEETS IS BASED ON LIMITED INVESTIGATIONS BY THE STATE AND IS IN NO WAY WARRANTED TO INDICATE THE CONDITIONS OF ACTUAL QUANTITIES OF WORK WHICH WILL BE REQUIRED.

Plotted Date: 12/14/2012

DESIGNER/DRAFTER: K. YUEN

CHECKED BY: W. VARRELL

SCALE AS NOTED

STATE OF CONNECTICUT
DEPARTMENT OF TRANSPORTATION

Filename: $FILEA$

SIGNATURE/BLOCK: OFFICE OF ENGINEERING

APPROVED BY: DATE:

PROJECT TITLE: TR 803 OVER I-84., U.S. 7 N.B. AND BEAVER BROOK

TOWN: DANBURY

DRAWING TITLE: PIERS 10 AND 11 EXISTING CONDITION

PROJECT NO. 34-334

DRAWING NO. STR-6

SHEET NO. 11

Border Verslon: 11/14/08

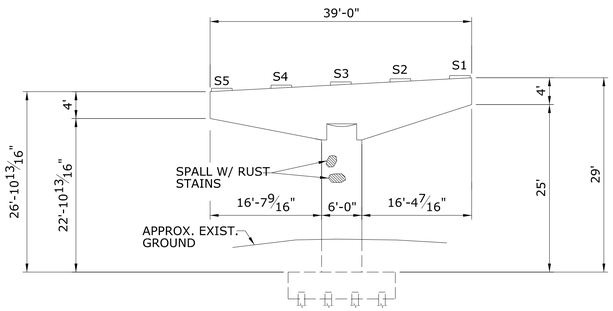

PIER 12 NORTH ELEVATION

SCALE: 3/32" = 1'-0"

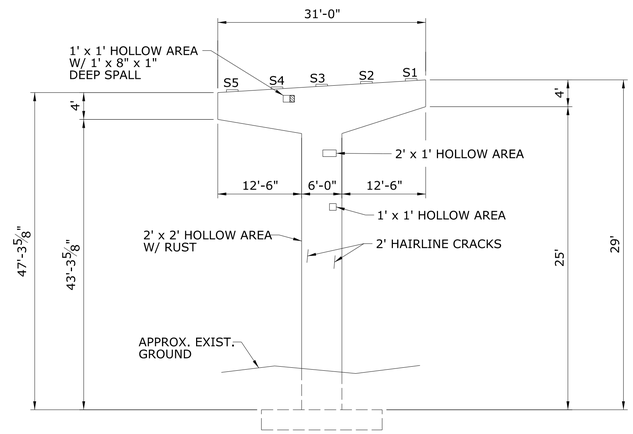

PIER 13 NORTH ELEVATION

SCALE: 3/32" = 1'-0"

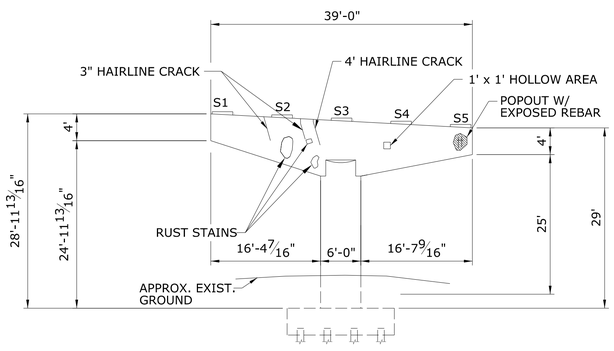

PIER 12 SOUTH ELEVATION

SCALE: 3/32" = 1'-0"

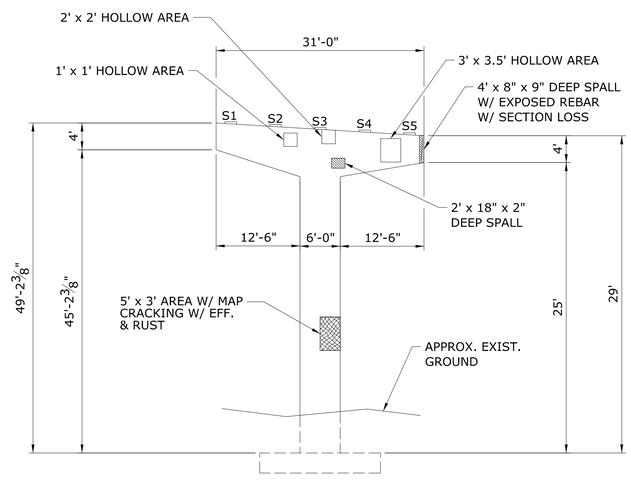

PIER 13 SOUTH ELEVATION

SCALE: 3/32" = 1'-0"

90% DESIGN REVIEW

REV.	DATE	REVISION DESCRIPTION	SHEET NO.
-	-	-	-
-	-	-	-
-	-	-	-
-	-	-	-
-	-	-	-
-	-	-	-

THE INFORMATION, INCLUDING ESTIMATED QUANTITIES OF WORK, SHOWN ON THESE SHEETS IS BASED ON LIMITED INVESTIGATIONS BY THE STATE AND IS IN NO WAY WARRANTED TO INDICATE THE CONDITIONS OF ACTUAL QUANTITIES OF WORK WHICH WILL BE REQUIRED.

Plotted Date: 12/14/2012

DESIGNER/DRAFTER: K. YUEN

CHECKED BY: W. VARRELL

SCALE AS NOTED

STATE OF CONNECTICUT
DEPARTMENT OF TRANSPORTATION

Filename: $FILEA$

SIGNATURE/BLOCK: OFFICE OF ENGINEERING

APPROVED BY: DATE:

PROJECT TITLE: TR 803 OVER I-84., U.S. 7 N.B. AND BEAVER BROOK

TOWN: DANBURY

DRAWING TITLE: PIERS 12 AND 13 EXISTING CONDITION

PROJECT NO. 34-334

DRAWING NO. STR-7

SHEET NO. 12

Border Version: 11/14/08

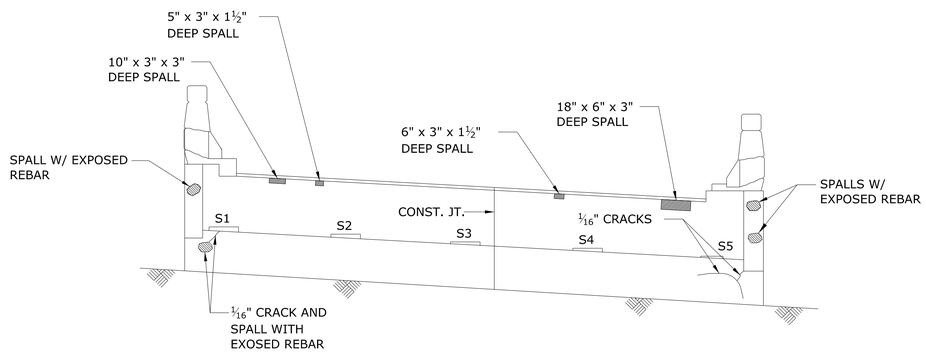

ELEVATION

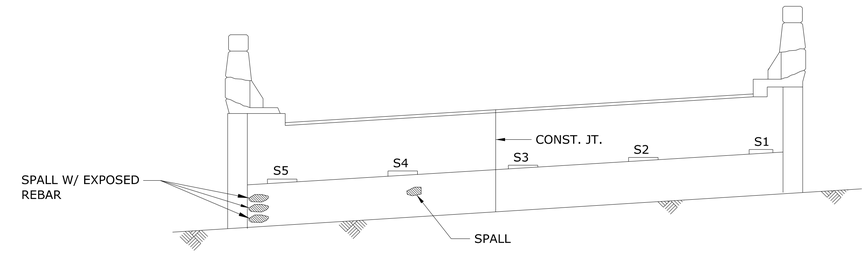

ELEVATION

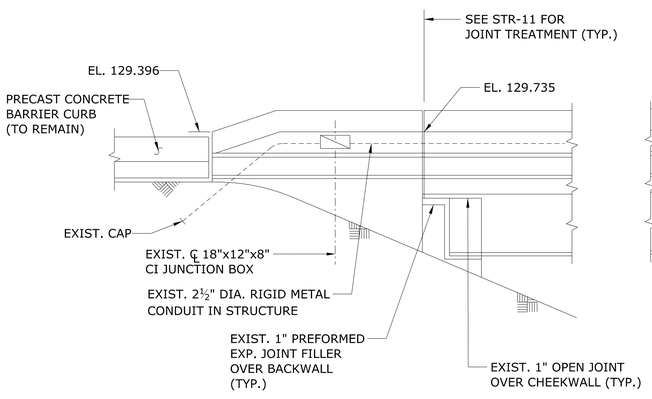

WINGWALL 1A

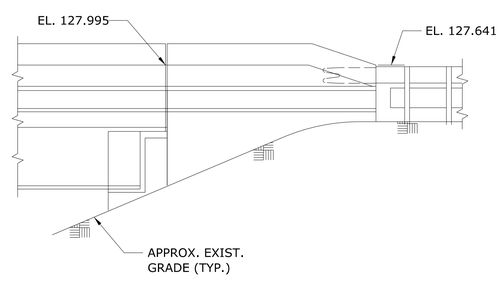

WINGWALL 1B

ABUTMENT NO. 1
SCALE: ¼" = 1'-0"

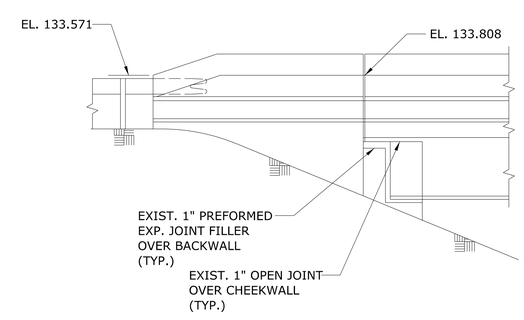

WINGWALL 2B

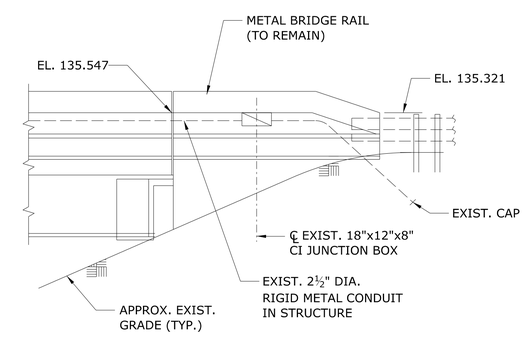

WINGWALL 2A

ABUTMENT NO. 2
SCALE: ¼" = 1'-0"

90% DESIGN REVIEW

REV.	DATE	REVISION DESCRIPTION	SHEET NO.
-	-	-	-
-	-	-	-
-	-	-	-
-	-	-	-
-	-	-	-
-	-	-	-

THE INFORMATION, INCLUDING ESTIMATED QUANTITIES OF WORK, SHOWN ON THESE SHEETS IS BASED ON LIMITED INVESTIGATIONS BY THE STATE AND IS IN NO WAY WARRANTED TO INDICATE THE CONDITIONS OF ACTUAL QUANTITIES OF WORK WHICH WILL BE REQUIRED.

Plotted Date: 12/14/2012

DESIGNER/DRAFTER: K. YUEN
CHECKED BY: W. VARRELL
SCALE AS NOTED

STATE OF CONNECTICUT
DEPARTMENT OF TRANSPORTATION

Filename: $FILEA$

SIGNATURE/ BLOCK:
OFFICE OF ENGINEERING
APPROVED BY: DATE:

PROJECT TITLE:
TR 803 OVER I-84.,
U.S. 7 N.B. AND BEAVER BROOK

TOWN: DANBURY

DRAWING TITLE:
ABUTMENTS NO 1 AND 2
EXISTING CONDITIONS

PROJECT NO. 34-334
DRAWING NO. STR-8
SHEET NO. 13

Border Version: 11/14/08

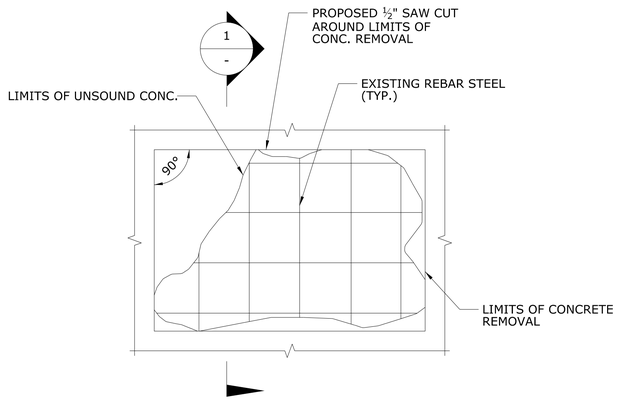

ELEVATION

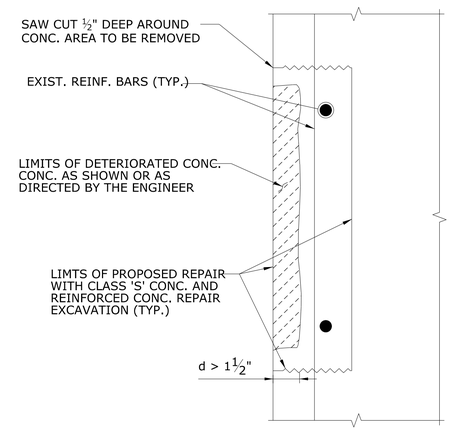

SECTION 1

SUBSTRUCTURE REPAIR DETAIL - DEPTH OF DETERIORATED CONCRETE d > 1 1/2"

SCALE: N.T.S.

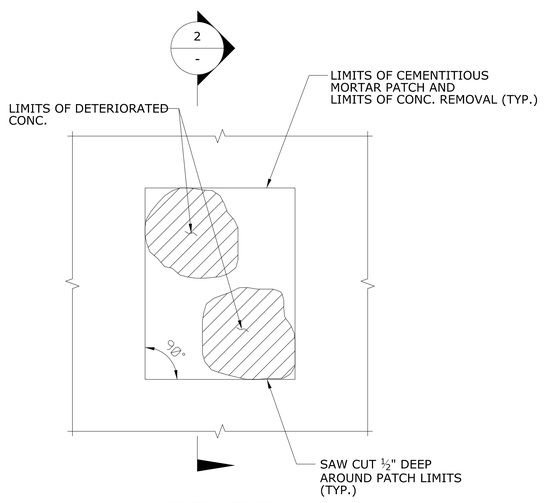

ELEVATION

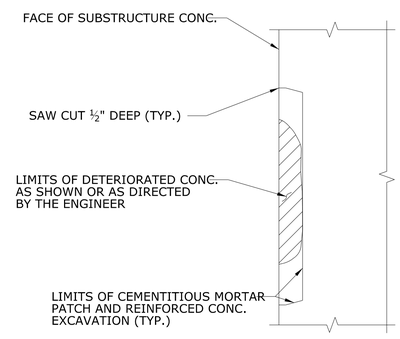

SECTION 2

SUBSTRUCTURE REPAIR DETAIL - DEPTH OF DETERIORATED CONCRETE d < 1 1/2"

SCALE: N.T.S.

SUBSTRUCTURE REPAIR NOTES:

1. CONTRACTOR SHALL ESTABLISH LIMITS OF VARIOUS REPAIRS AS SHOWN AND AT THE DIRECTION OF THE ENGINEER. THE EXTENT, LOCATION AND REPAIR TYPE OF ALL CONCRETE REPAIRS ARE TO BE FIELD VERIFIED AND APPROVED BY THE ENGINEER AFTER THE CONTRACTOR HAS SOUNDED AND MARKED OUT THE REPAIR AREAS. REPAIR CONFIGURATIONS SHOULD BE KEPT AS SIMPLE AS POSSIBLE, PREFERABLY WITH SQUARE CORNERS.
2. THE LIMITS OF THE REPAIRS SHALL BE SAWCUT ALONG NEAT LINES TO A DEPTH OF ½" WHERE PRACTICAL TO PRODUCE A CLEAN EDGE.
3. REMOVE DETERIORATED AND UNSOUND CONCRETE. REINFORCEMENT BARS SHALL ONLY BE EXPOSED ONE HALF OF THE SURFACE BEFORE THE REMOVAL EXTENDS TO A MINIMUM OF 1" BEYOND THE BAR. UNDERCUT EXPOSED REINFORCING STEEL TO PROVIDE MINIMUM CLEARANCE OF 1" AROUND BARS. REMOVE ADDITIONAL CONCRETE AS NECESSARY TO PROVIDE MINIMUM REQUIRED THICKNESS OF REPAIR MATERIAL.
4. MISSING OR DETERIORATED REINFORCING STEEL SHALL BE REPLACED AS DIRECTED BY THE ENGINEER AND WILL BE PAID FOR UNDER THE "DEFORMED STEEL BARS - EPOXY COATED" ITEM.
5. FOR ALL REPAIRS WHERE REINFORCEMENT HAS BEEN EXPOSED TO A POINT 1" ALL AROUND THE BAR, USE CLASS 'S' CONCRETE, OTHERWISE USE MATERIAL REQUIRED UNDER VARIABLE DEPTH PATCH.
6. IF REINFORCING STEEL IS EXPOSED, THEN CLEAN BY MECHANICAL CLEANING AND HIGH PRESSURE WASHING WITH WATER THAT CONTAINS NO DETERGENTS OR BOND INHIBITING CHEMICALS. WHERE ACTIVE CORROSION HAS OCCURRED (THAT WHICH WOULD INHIBIT BONDING) SANDBLAST STEEL TO WHITE METAL FINISH.
7. THE SURFACE OF EXISTING OR PREVIOUSLY CAST CONCRETE SHALL BE BLAST CLEANED, ROUGHENED, WETTED WITH CLEAN WATER, AND THEN FLUSHED WITH A MORTAR COMPOSED OF EQUAL PARTS OF THE CEMENT AND SAND SPECIFIED FOR THE NEW CONCRETE, BEFORE NEW CONCRETE IS PLACED ADJACENT THERETO. NEW CONCRETE SHALL BE PLACED BEFORE MORTAR HAS TAKEN INITIAL SET.
8. IN LIEU OF THE MORTAR, AN EPOXY ADHESIVE SUITABLE FOR BONDING FRESH CONCRETE TO HARDENED CONCRETE FOR LOAD BEARING APPLICATIONS MAY BE USED. THE EPOXY ADHESIVE SHALL CONFORM TO AASHTO M 235 TYPE V AND SHALL BE APPLIED IN ACCORDANCE WITH THE MANUFACTURER'S RECOMMENDATIONS.
9. ALL SURFACES SHALL BE RUBBED TO PRODUCE A SMOOTH FINISH TO MATCH EXISTING SURFACES.
10. EXISTING CRACKS IDENTIFIED BY THE ENGINEER SHALL BE SEALED IN ACCORDANCE WITH THE SPECIAL PROVISIONS.
11. COVER OVER EXISTING REINFORCEMENT SHALL BE A MINIMUM OF 2". FACE OF PATCHED AREA MAY BE "BUMPED OUT" TO MEET THIS REQUIREMENT, IF NECESSARY.
12. THE MAXIMUM EXPOSED SURFACE AREA OF PIER COLUMN OR PIER FACE REPAIR AT ONE TIME IS 20 SQUARE FEET. IN ADDITION, DO NOT EXPOSE MORE THAN 1/3 OF THE PERIMETER OF THE COLUMN. USE

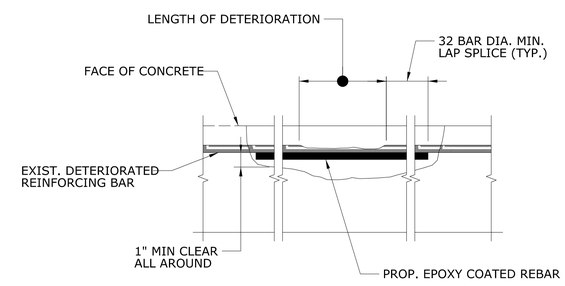

DETERIORATED REINFORCING BAR REPAIR DETAIL (TYP.)

SCALE: N.T.S.

90% DESIGN REVIEW

REV.	DATE	REVISION DESCRIPTION	SHEET NO.
-	-	-	-
-	-	-	-
-	-	-	-
-	-	-	-
-	-	-	-
-	-	-	-

THE INFORMATION, INCLUDING ESTIMATED QUANTITIES OF WORK, SHOWN ON THESE SHEETS IS BASED ON LIMITED INVESTIGATIONS BY THE STATE AND IS IN NO WAY WARRANTED TO INDICATE THE CONDITIONS OF ACTUAL QUANTITIES OF WORK WHICH WILL BE REQUIRED.

Plotted Date: 12/14/2012

DESIGNER/DRAFTER: K. YUEN
CHECKED BY: W. VARRELL
SCALE AS NOTED

STATE OF CONNECTICUT
DEPARTMENT OF TRANSPORTATION

Filename: $FILEA$

SIGNATURE/BLOCK: OFFICE OF ENGINEERING
APPROVED BY: DATE:

PROJECT TITLE: TR 803 OVER I-84., U.S. 7 N.B. AND BEAVER BROOK

TOWN: DANBURY

DRAWING TITLE: SUBSTRUCTURE REPAIRS - 1 OF 2

PROJECT NO. 34-334
DRAWING NO. STR-9
SHEET NO. 14

Border Version: 11/14/08

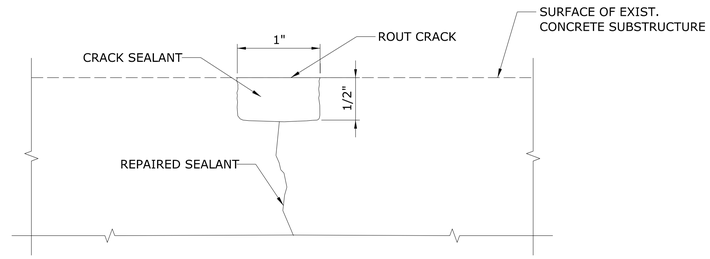

CRACK SURFACE SEALANT REPAIR

SCALE: N.T.S.

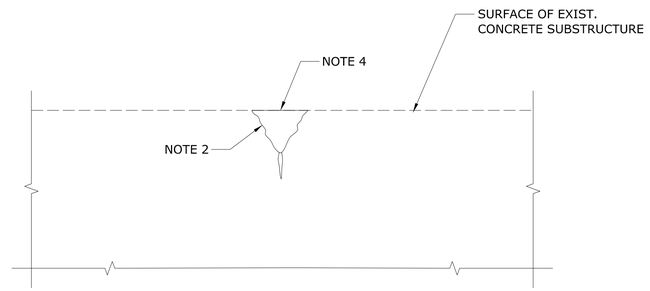

CRACK REPAIR

SCALE: N.T.S.

REPAIR PROCEDURE:

1. REPAIR AREA SHOULD NOT BE LESS THAN ⅛" IN DEPTH.
2. APPLY SCRUB COAT TO PREPARED SUBSTRATE.
3. PRESSURE INJECT EPOXY GEL INTO CRACK.
4. WHILE THE EPOXY GEL IN CRACK IS STILL WET, PATCH SPALL WITH TWO-COMPONENT, POLYMER-MODIFIED, PORTLAND CEMENT, FAST-SETTING, NON-SAG MORTAR IN ACCORDANCE WITH THE MANUFACTURER'S SPECIFICATIONS.
5. STRIKE OFF AND LEVEL AS REQUIRED.

90% DESIGN REVIEW

REV.	DATE	REVISION DESCRIPTION	SHEET NO.
-	-	-	-
-	-	-	-
-	-	-	-
-	-	-	-
-	-	-	-
-	-	-	-

THE INFORMATION, INCLUDING ESTIMATED QUANTITIES OF WORK, SHOWN ON THESE SHEETS IS BASED ON LIMITED INVESTIGATIONS BY THE STATE AND IS IN NO WAY WARRANTED TO INDICATE THE CONDITIONS OF ACTUAL QUANTITIES OF WORK WHICH WILL BE REQUIRED.

Plotted Date: 12/14/2012

DESIGNER/DRAFTER: K. YUEN
CHECKED BY: W. VARRELL
SCALE AS NOTED

STATE OF CONNECTICUT
DEPARTMENT OF TRANSPORTATION

Filename: $FILEA$

SIGNATURE/ BLOCK: OFFICE OF ENGINEERING
APPROVED BY: DATE:

PROJECT TITLE: TR 803 OVER I-84., U.S. 7 N.B. AND BEAVER BROOK

TOWN: DANBURY

DRAWING TITLE: SUBSTRUCTURE REPAIRS - 2 OF 2

PROJECT NO. 34-334
DRAWING NO. STR-10
SHEET NO. 15

Border Version: 11/14/08

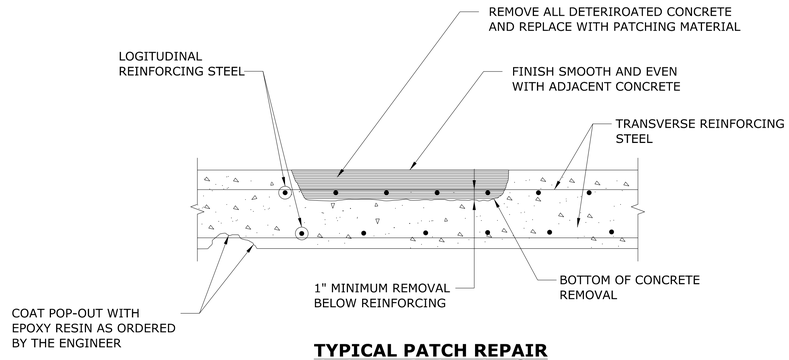

TYPICAL PATCH REPAIR
PARTIAL DEPTH PATCH

SCALE: N.T.S

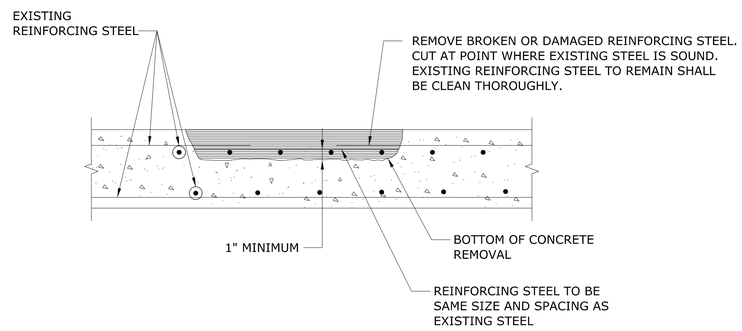

REPAIR OF DAMAGED
REINFORCING STEEL

SCALE: N.T.S

SLAB PATCHING NOTES:

1. THE REINFORCEMENT SHALL BE EPOXY COATED AND CONFORM TO ASTM A615M, GRADE 420.
2. THE EXACT LOCATION AND EXTENT OF ALL DETERIORATED DECK SLAB AND APPROACH SLAB AREAS TO BE REPAIRED WILL BE DETERMINED BY THE ENGINEER. AFTER REMOVAL OF THE EXISTING OVERLAY, THE ENGINEER SHALL CHAIN DRAG AND/OR HAMMER TAP THE SLAB TO DELINATE THE DETERIORATED AREAS. THE DETERIORATED SLAB AREAS SHALL BE REPAIRED BY THE CONTRACTOR UNDER THE ITEM "PARTIAL DEPTH PATCH."
3. THE COST OF REMOVAL OF THE DETERIORATED CONCRETE, INCLUDING THE 15 mm SAW CUT, AND THE FURNISHING AND PLACING THE PATCHING MATERIAL SHALL BE PAID FOR UNDER THE ITEM "PARTIAL DEPTH PATCH."
4. THE COST OF THE FRNISHING AND PLACING THE REINFORCEMENT SHALL BE PAID FOR UNDER THE ITEM "DEFORMED STEEL BARS (EPOXY COATED)."

90% DESIGN REVIEW

REV.	DATE	REVISION DESCRIPTION	SHEET NO.
-	-	-	-
-	-	-	-
-	-	-	-
-	-	-	-
-	-	-	-
-	-	-	-

THE INFORMATION, INCLUDING ESTIMATED QUANTITIES OF WORK, SHOWN ON THESE SHEETS IS BASED ON LIMITED INVESTIGATIONS BY THE STATE AND IS IN NO WAY WARRANTED TO INDICATE THE CONDITIONS OF ACTUAL QUANTITIES OF WORK WHICH WILL BE REQUIRED.

Plotted Date: 12/13/2012

DESIGNER/DRAFTER: K. YUEN
CHECKED BY: W. VARRELL
SCALE AS NOTED

STATE OF CONNECTICUT
DEPARTMENT OF TRANSPORTATION

Filename: ...\SB_MSH_Br00548_034-334_DECK REPAIRS-2.dgn

SIGNATURE/ BLOCK:
OFFICE OF ENGINEERING
APPROVED BY: DATE:

PROJECT TITLE:
TR 803 OVER I-84.,
U.S. 7 N.B. AND BEAVER BROOK

TOWN: DANBURY

DRAWING TITLE: DECK SLAB REPAIRS

PROJECT NO. 34-334
DRAWING NO. STR-11
SHEET NO. 16

Border Version: 11/14/08

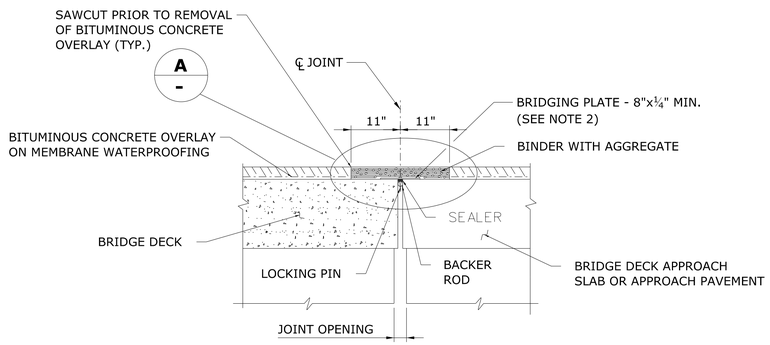

ASPHALTIC PLUG EXPANSION JOINT SYSTEM

SCALE: ¾" = 1'-0"

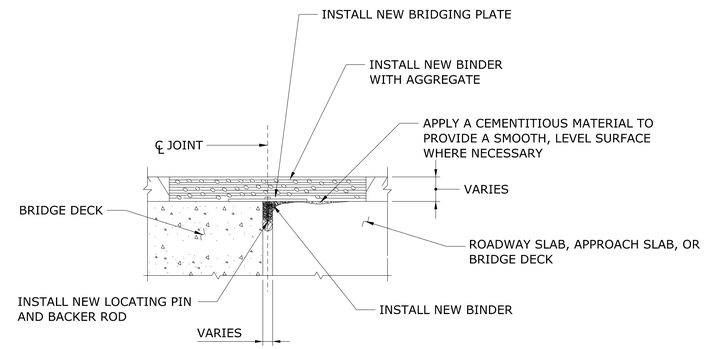

INSTALLATION OF ASPHALTIC PLUG EXPANSION JOINT SYSTEM

SCALE: 1½" = 1'-0"

SECTION A / -

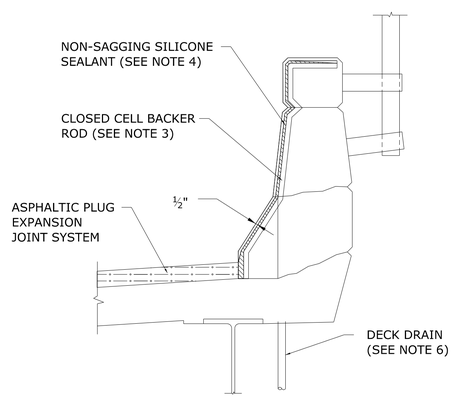

JOINT TREATMENT AT PARAPET

SCALE: 1/4" = 1'-0"

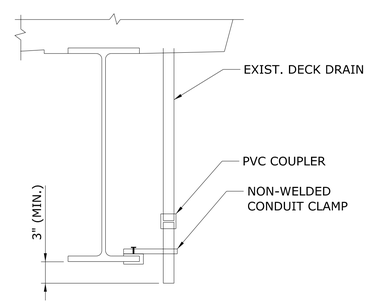

DECK DRAIN REPAIR

SCALE: ¼" = 1'-0"

NOTES:

1. REMOVE NEW BITUMINOUS CONCRETE OVERLAY AND MEMBRANE WATERPROOFING. REPLACE WITH ASPHALTIC PLUG EXPANSION JOINT SYSTEM. TO BE PAID FOR UNDER THE ITEM "ASPHALTIC PLUG EXPANSION JOINT SYSTEM".
2. BRIDGING PLATE ONLY USED AT JOINTS AT PIERS.
3. THE CLOSED CELL BACKER ROD SHALL BE PLACED A MINIMUM OF 2" FROM THE OUTSIDE FACE OF PARAPETS AND MEDIAN BARRIERS.
4. THE NON-SAGGING SILICONE SEALANT SHALL BE PLACED ON THE BACKER ROD ½" THICK. AT THE GUTTER, THE SILICONE SEALANT SHALL BE PLACED FLUSH WITH THE OUTSIDE FACE OF CONCRETE.
5. PRIOR TO INSTALLING THE SILICONE SEALANT, CLEAN JOINT SIDES BY SANDBLASTING. DUST SHALL BE REMOVED BY THE METHOD APPROVED BY THE ENGINEER. THIS WORK SHALL BE PAID FOR UNDER THE ITEM "ASPHALTIC PLUG EXPANSION JOINT SYSTEM".
6. ALL DECK DRAINS SHALL BE INSPECTED AND BE REPAIRED OR LENGTHENED AS SHOWN IN THE DECK DRAIN REPAIR DETAIL ON THIS SHEET. ALL DECK DRAINS SHALL POINT AWAY FROM THE STRUCTURAL STEEL AND EXTEND A MINIMUM OF 3" BELOW THE GIRDER BOTTOM FLANGES.

90% DESIGN REVIEW

REV.	DATE	REVISION DESCRIPTION	SHEET NO.
-	-	-	-
-	-	-	-
-	-	-	-
-	-	-	-
-	-	-	-
-	-	-	-

THE INFORMATION, INCLUDING ESTIMATED QUANTITIES OF WORK, SHOWN ON THESE SHEETS IS BASED ON LIMITED INVESTIGATIONS BY THE STATE AND IS IN NO WAY WARRANTED TO INDICATE THE CONDITIONS OF ACTUAL QUANTITIES OF WORK WHICH WILL BE REQUIRED.

Plotted Date: 12/14/2012

DESIGNER/DRAFTER: K. YUEN
CHECKED BY: W. VARRELL
SCALE AS NOTED

STATE OF CONNECTICUT
DEPARTMENT OF TRANSPORTATION

Filename: $FILEA$

SIGNATURE/BLOCK:
OFFICE OF ENGINEERING
APPROVED BY: DATE:

PROJECT TITLE:
TR 803 OVER I-84.,
U.S. 7 N.B. AND BEAVER BROOK

TOWN: DANBURY

DRAWING TITLE:
ASPHALTIC PLUG
EXP. JOINT SYSTEM

PROJECT NO. 34-334
DRAWING NO. STR-12
SHEET NO. 17

Border Version: 11/14/08

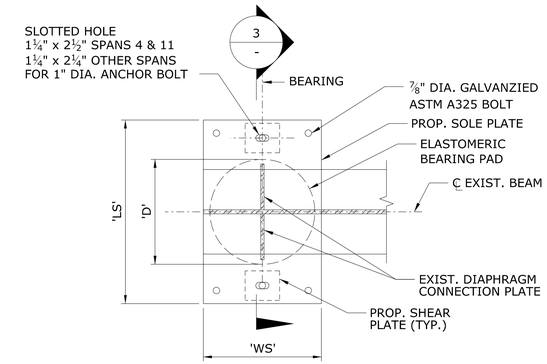

PLAN

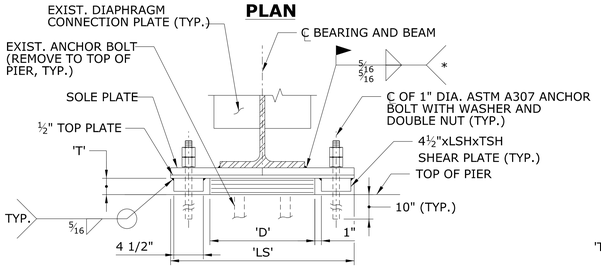

(*) - WELDS SHALL TERMINATE ¼"
FROM EDGE OF PLATE.

SECTION 3

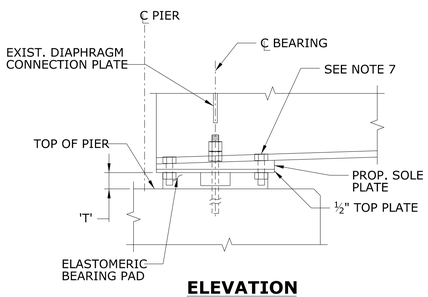

ELEVATION

ELASTOMERIC BEARING ASSEMBLY EXPANSION BEARINGS

SCALE: 1" = 1'-0"

EXPANSION BEARING NOTES:

1. STEEL SOLE PLATES, TOP PLATES, AND SHEAR PLATES SHALL CONFORM TO AASHTO M 270 GRADE 36 AND SHALL BE HOT-DIP GALVANIZED.
2. CENTER THE ELASTOMERIC PAD UNDER THE SOLE PLATE DURING BEAM JACKING.
3. BEAMS SHALL BE JACKED WHEN THE AMBIENT TEMPERATURE IS BETWEEN 50°F AND 77°F.
4. WELD SOLE PLATE TO BOTTOM FLANGE OF EXISTING PLATE PRIOR TO BOLTING SOLE PLATE TO TOP PLATE.
5. CONTRACTOR SHALL FIELD VERIFY THE SLOPE OF THE BOTTOM FLANGES AND THE CLEARANCES BETWEEN THE BOTTOM FLANGES AND THE BRIDGE SEAT PRIOR TO FABRICATION OF BEARING ASSEMBLIES.
6. ONLY ONE BEARING ASSEMBLY SHALL BE REPLACED AT A TIME.
7. BURR THREADS ONCE BEARING INSTALLATION IS COMPLETE.

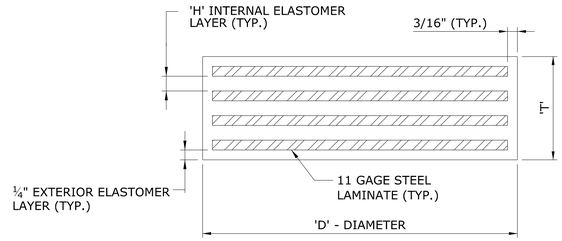

ELASTOMERIC BEARING PAD NOTES:

1. ELASTOMER SHALL HAVE A HARDNESS OF 60 DUROMETER.
2. STEEL LAMINATES SHALL CONFORM TO ASTM A 36 GRADE 36.
3. SEE ELASTOMERIC BEARING TABLE FOR COMPRESSIVE DESIGN LOADS AND STRESSES.
4. ELASTOMERIC BEARING PAD SHALL BE SHOP VULCANIZED TO THE TOP PLATE.

ELASTOMERIC BEARING PAD

SCALE: N.T.S.

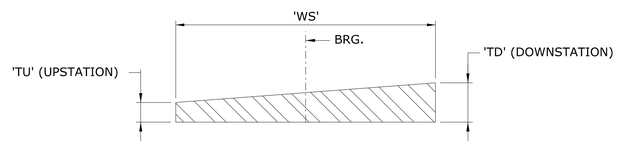

SOLE PLATE DETAIL

SCALE: 3" = 1'-0"

SHEAR PLATE DIMENSIONS		
LOCATION	LSH (IN)	TSH (IN)
PIER 4 - SPAN P3	5½	2⅜
PIER 10	5½	2
ALL OTHER PIERS	5¼	2

EXPANSION BEARING INSTALLATION PROCEDURE:

1. JACK BEAMS AT ENDS OF SPANS. ENSURE THAT FULL LOAD ON BEARINGS HAVE BEEN REMOVED. JACK ENTIRE SPAN AT ONE TIME.
2. REMOVE EXISTING KEEPER DEVICE.
3. REMOVE EXISTING EXPANSION BEARINGS. EXISTING ANCHOR BOLTS SHALL BE REMOVED FLUSH TO TOP OF PIER SURFACE.
4. IDENTIFY PROPOSED ANCHOR BOLT LOCATIONS AND CORE HOLES AS REQUIRED FOR ANCHOR BOLT INSTALLATION.
5. WELD SOLE PLATE TO BOTTOM FLANGE OF BEAM.
6. INSTALL AND BOLT VULCANIZED ELASTOMERIC BEARING AND TOP PLATE TO SOLE PLATE.
7. INSTALL EPOXY ANCHOR BOLTS PER MANUFACTURER'S RECOMMENDATIONS.

ELASTOMERIC BEARING DETAILS						
LOCATION	D (IN)	# INTERNAL LAYERS	H (IN)	T (IN)	COMPRESSIVE LOAD (KIP)	COMPRESSIVE STRESS (KSI)
PIER 4 - SPAN P3	14	3	5/8	2 7/8	117.9	0.766
ALL OTHER PIERS	12	3	1/2	2 1/2	104.6	0.925

SOLE PLATE DIMENSIONS					
LOCATION	WS (IN)	LS (IN)	TU (IN) UPSTATION	TC (IN) CENTER	TD (IN) DOWNSTATION
PIERS 1 & 2	14	24	1 17/32	1 23/32	1 29/32
PIER 3	14	24	1 9/16	1 23/32	1 7/8
PIER 4 - SPAN P3	16	28½	1	1 5/32	1 5/16
PIER 4 - SPAN P4	14	24	1 13/16	1 23/32	1 5/8
PIER 5	14	24	1 25/32	1 23/32	1 21/32
PIER 6	14	24	1 3/4	1 23/32	1 11/16
PIERS 7, 8, 9	14	24	1 23/32	1 23/32	1 23/32
PIER 10 (P1001, P1003, P1004)	14	24	1 11/16	1 23/32	1 3/4
PIER 10 (P1002)	14	24	1 17/32	1 9/16	1 19/32
PIER 10 (P1005)	14	28½	1½	1 17/32	1 9/16
PIER 11 (P1101-P1104)	14	24	1 21/32	1 23/32	1 25/32
PIER 11 (P1105)	14	24	1 5/8	1 23/32	1 13/16
PIER 12 (P1202, P1203, P1204)	14	24	1 5/8	1 23/32	1 13/16
PIER 12 (P1205)	14	28½	1 19/32	1 11/16	1 25/32
PIER 12 (P1201)	14	28½	1 7/16	1 17/32	1 5/8
PIER 13	14	24	1 19/32	1 23/32	1 27/32

*TOP PLATES SHALL HAVE THE SAME LENGTH AND WIDTH AS THE SOLE PLATES.

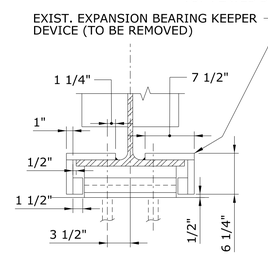

END VIEW FOR 16 1/2" STRINGER FLANGE

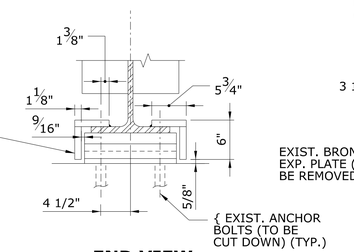

END VIEW FOR 12" STRINGER FLANGE

EXISTING BEARING ASSEMBLY

SCALE: 1" = 1'-0"

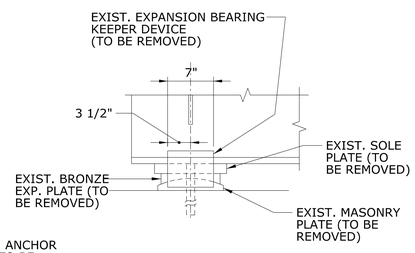

END VIEW FOR BOTH FLANGE WIDTHS

NOTE:
SEE EXISTING PLANS FOR ADDITIONAL EXISTING BEARING ASSEMBLY DETAIL

90% DESIGN REVIEW

REV.	DATE	REVISION DESCRIPTION	SHEET NO.
-	-	-	-
-	-	-	-
-	-	-	-
-	-	-	-
-	-	-	-
-	-	-	-

THE INFORMATION, INCLUDING ESTIMATED QUANTITIES OF WORK, SHOWN ON THESE SHEETS IS BASED ON LIMITED INVESTIGATIONS BY THE STATE AND IS IN NO WAY WARRANTED TO INDICATE THE CONDITIONS OF ACTUAL QUANTITIES OF WORK WHICH WILL BE REQUIRED.

Plotted Date: 12/14/2012

DESIGNER/DRAFTER: K. YUEN
CHECKED BY: W. VARRELL
SCALE AS NOTED

STATE OF CONNECTICUT
DEPARTMENT OF TRANSPORTATION

Filename: $FILE$

SIGNATURE/BLOCK: OFFICE OF ENGINEERING
APPROVED BY: DATE:

PROJECT TITLE: TR 803 OVER I-84., U.S. 7 N.B. AND BEAVER BROOK

TOWN: DANBURY

DRAWING TITLE: BEARING DETAILS

PROJECT NO. 34-334
DRAWING NO. STR-13
SHEET NO. 18

Border Version: 11/14/08

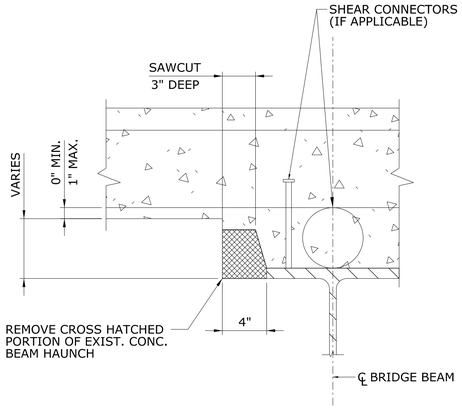

DETAILS FOR CONCRETE HAUNCH REMOVAL
SCALE: N.T.S.

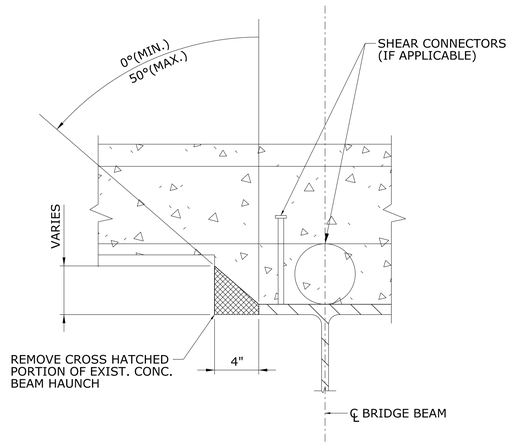

EXISTING CONDITION

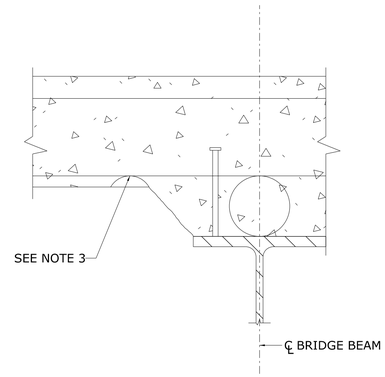

FINAL CONDITION

DETAILS FOR CONCRETE HAUNCH REMOVAL - INACCESSIBLE LOCATIONS*
SCALE: N.T.S.

*SEE NOTE 2

NOTES:

1. THE REMOVAL OF THE PORTION OF THE CONCRETE HAUNCH SHOWN SHALL BE PAID FOR AT THE CONTRACT UNIT PRICE PER LINEAR FOOT FOR "CONCRETE HAUNCH REMOVAL".
2. THIS METHOD TO BE USED ONLY IN THOSE AREAS HAVING INSUFFICIENT CLEARANCE FOR SAW-CUTTING EQUIPMENT SUCH AS ABOVE SOME DIAPHRAGMS AS ORDERED BY THE ENGINEER.
3. IF OVER-REMOVAL RESULTS, APPLY TWO COATS OF EPOXY RESIN TO DECK REINFORCING STEEL EXPOSED DURING REMOVAL. ALL REASONABLE PRECAUTIONS SHALL BE TAKEN TO AVOID THIS CONDITION.

90% DESIGN REVIEW

REV.	DATE	REVISION DESCRIPTION	SHEET NO.
-	-	-	-
-	-	-	-
-	-	-	-
-	-	-	-
-	-	-	-
-	-	-	-

THE INFORMATION, INCLUDING ESTIMATED QUANTITIES OF WORK, SHOWN ON THESE SHEETS IS BASED ON LIMITED INVESTIGATIONS BY THE STATE AND IS IN NO WAY WARRANTED TO INDICATE THE CONDITIONS OF ACTUAL QUANTITIES OF WORK WHICH WILL BE REQUIRED.

Plotted Date: 12/14/2012

DESIGNER/DRAFTER: K. YUEN
CHECKED BY: W. VARRELL
SCALE AS NOTED

STATE OF CONNECTICUT
DEPARTMENT OF TRANSPORTATION

Filename: $FILEA$

SIGNATURE/BLOCK:
OFFICE OF ENGINEERING
APPROVED BY: DATE:

PROJECT TITLE:
TR 803 OVER I-84.,
U.S. 7 N.B. AND BEAVER BROOK

TOWN: DANBURY

DRAWING TITLE: PARTIAL CONCRETE HAUNCH REMOVAL

PROJECT NO. 34-334
DRAWING NO. STR-14
SHEET NO. 19

Border Verslon: 11/14/08

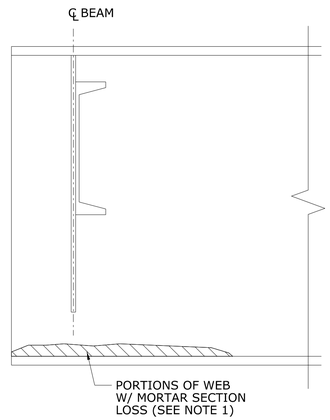

EXISTING WEB DETERIORATION

SCALE: 3/4" = 1'-0"

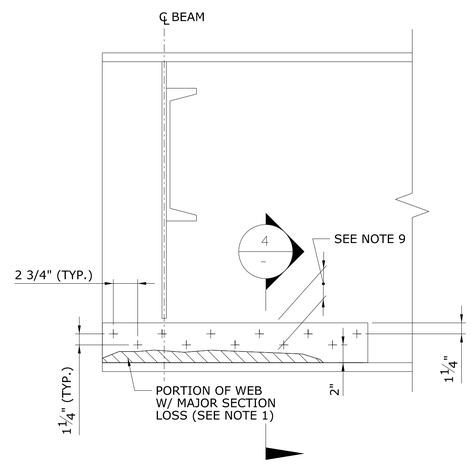

TYPICAL REPAIR DETAIL FOR DETERIORATED WEB

SCALE: 3/4" = 1'-0"

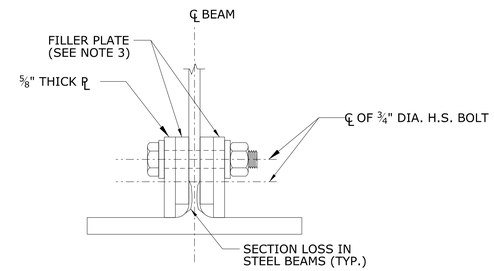

SECTION 4

SCALE: 3" = 1'-0"

NOTES:

1. SECTION LOSS IN GIRDER WEBS HAS BEEN IDENTIFIED AT THE ENDS OF THE GIRDER G5 AT PIERS 8 AND 9. THE CONTRACTOR SHALL INSPECT THE ENDS OF ALL GIRDERS AFTER THEY ARE BLAST CLEANED AND/OR REPAIR ALL MAJOR SECTION LOSS AS DIRECTED BY THE ENGINEER.
2. SECTION LOSS OF WEB SHALL BE CONSIDERED MAJOR SECTION LOSS THAT REQUIRES A REPAIR WHEN SECTION LOSS EXCEEDS 25% OF AS-BUILT SECTION THICKNESS AND/OR AREA OF SECTION LOSS EXCEEDS 16 SQUARE INCHES.
3. LIMITS OF WEB REPAIR SHALL BE WITHIN A DISTANCE OF 2 TIMES THE DEPTH OF THE MEMBER FROM THE CENTERLINE OF BEARING.
4. THE FILL PLATE THICKNESS SHALL EQUAL THE RADIUS OF THE FILLET OF THE ROLLED BEAM.
5. ONLY ONE REPAIR SHALL BE DONE AT ONE TIME.
6. HOLES IN REPAIR PLATES AND FILL PLATES SHALL BE SHOP DRILLED. FIELD DRILLING OF HOLES IN BEAMS SHALL BE DONE ONE AT A TIME AND A BOLT SHALL BE IMMEDIATELY INSTALLED IN THE HOLE. NO MORE THAN ONE EMPTY HOLE SHALL BE ALLOWED AT ANY TIME.
7. PERIMETER OF NEW WEB REPAIR PLATES SHALL BE CAULKED WITH A PAINTABLE CAULK PER SPECIFICATIONS.
8. MAXIMUM EDGE DISTANCE TO CENTERLINE OF BOLTS SHALL NOT EXCEED 3 INCHES.
9. REPAIR PLATE TO EXTEND A MINIMUM OF 3" BEYOND LIMITS OF DETERIORATION.

90% DESIGN REVIEW

REV.	DATE	REVISION DESCRIPTION	SHEET NO.
-	-	-	-
-	-	-	-
-	-	-	-
-	-	-	-
-	-	-	-
-	-	-	-

THE INFORMATION, INCLUDING ESTIMATED QUANTITIES OF WORK, SHOWN ON THESE SHEETS IS BASED ON LIMITED INVESTIGATIONS BY THE STATE AND IS IN NO WAY WARRANTED TO INDICATE THE CONDITIONS OF ACTUAL QUANTITIES OF WORK WHICH WILL BE REQUIRED.

Plotted Date: 12/13/2012

DESIGNER/DRAFTER: K. YUEN
CHECKED BY: W. VARRELL
SCALE AS NOTED

STATE OF CONNECTICUT
DEPARTMENT OF TRANSPORTATION

Filename: ...\SB_MSH_Br00548_034-334_WEBREPAIR-2.dgn

SIGNATURE/ BLOCK: OFFICE OF ENGINEERING
APPROVED BY: DATE:

PROJECT TITLE: TR 803 OVER I-84., U.S. 7 N.B. AND BEAVER BROOK

TOWN: DANBURY

DRAWING TITLE: WEB REPAIR DETAILS

PROJECT NO. 34-334
DRAWING NO. STR-15
SHEET NO. 20

Border Version: 11/14/08

D1 - SERIES

D1-1

(DESTINATION)

VARIABLE LEGEND & ARROW DIRECTION

AREA SQ.FT	SIZE (INCHES)	CONN. D.O.T. #	POSTS	ALUM. THK.
4.16	60X10	51-5202	2	.100
8.30	60X20	51-5203	2	.100

D2 - SERIES

D2-1

(DESTINATION) 00

VARIABLE LEGEND & MILEAGE

AREA SQ.FT	SIZE (INCHES)	CONN. D.O.T. #	POSTS	ALUM. THK.
4.16	60X10	51-5222	2	.100
8.30	60X20	51-5223	2	.100

D4 - SERIES

PARK & RIDE

AREA SQ.FT	SIZE (INCHES)	CONN. D.O.T. #	POSTS	ALUM. THK.
5.00	24X30	51-6001	1	.080

PARK & RIDE 51-6002 | PARK & RIDE 51-6003

AREA SQ.FT	SIZE (INCHES)	CONN. D.O.T. #	POSTS	ALUM. THK.
5.00	24X30		1	.080

51-2666 51-2646 L OR R | 51-2645

AREA SQ.FT	SIZE (INCHES)	CONN. D.O.T. #	POSTS	ALUM. THK.
0.75	12X9	51-2666		.080
1.50	21X18	51-2646		.080
1.50	21X18	51-2645		.080

51-2650 | 51-2651

AREA SQ.FT	SIZE (INCHES)	CONN. D.O.T. #	POSTS	ALUM. THK.
2.19	21X15	51-2650		.080
2.19	21X15	51-2651		.080

D9 - SERIES

D9-2

**

AREA SQ.FT	SIZE (INCHES)	CONN. D.O.T. #	POSTS	ALUM. THK.
4.00	24	51-6788	1	.080

D9-3a

**

AREA SQ.FT	SIZE (INCHES)	CONN. D.O.T. #	POSTS	ALUM. THK.
4.00	24	51-6762	1	.080

DIESEL 51-6705
FOOD 51-6706
PHONE 51-6707
GAS 51-6708
LODGING 51-6709

VARIABLE ARROWS

AREA SQ.FT	SIZE (INCHES)	CONN. D.O.T. #	POSTS	ALUM. THK.
2.25	36X9		2	.100

D10 - SERIES

D10-1 D10-2 D10-3

AREA SQ.FT	SIZE (INCHES)	CONN. D.O.T. #	POSTS	ALUM. THK.
2.00	12X24	51-5291	1	.080
3.00	12X36	51-5292	1	.080
4.00	12X48	51-5293	1	.080

BACKGROUND - BLUE
LEGEND - SILVER

REST AREA

AREA SQ.FT	SIZE (INCHES)	CONN. D.O.T. #	POSTS	ALUM. THK.
42.2	78X78	51-6901	2B ◀	.125

RECREATIONAL - SERIES

RW-080

AREA SQ.FT	SIZE (INCHES)	CONN. D.O.T. #	POSTS	ALUM. THK.
4.00	24	51-6873	1	.080

51-2705 | 51-2706 L OR R

AREA SQ.FT	SIZE (INCHES)	CONN. D.O.T. #	POSTS	ALUM. THK.
2.19	21X15	51-2706		.080
2.19	21X15	51-2705		.080

D-7

W OR W/O ARROW
ARROW VARIABLE

(VARIABLE) 51-6802

(VARIABLE) (VARIABLE) 51-6803

AREA SQ.FT	SIZE (INCHES)	CONN. D.O.T. #	POSTS	ALUM. THK.
4.17	60X10	51-6802	2	.100
8.33	60X20	51-6803	2	.100

E5 - SERIES

E5-1

EXIT (L) | EXIT (R)

AREA SQ.FT	SIZE (INCHES)	CONN. D.O.T. #	POSTS	ALUM. THK.
30.0	72X60	51-6150 (L OR R)	2B◀	.125

E5-1a

EXIT 00 (L) | EXIT 00 (R)

AREA SQ.FT	SIZE (INCHES)	CONN. D.O.T. # (L OR R)	POSTS	ALUM. THK.
30.0	72X60	51-6152	2B◀	.125
37.5	90X60	51-6153	2B◀	.125
47.5	114X60	51-6154	2B◀	.125

I - SERIES

(VARIABLE) RIVER

AREA SQ.FT	SIZE (INCHES)	CONN. D.O.T. #	POSTS	ALUM. THK.
1.50	18X12	51-2009	1	.080

(TOWN NAME) (INCORPORATED OR SETTLED) (DATE) TOWN LINE

AREA SQ.FT	SIZE (INCHES)	CONN. D.O.T. #	POSTS	ALUM. THK.
7.70	40X27	51-2020	2	.080

M1 - SERIES

M1-1

INTERSTATE CONNECTICUT 00

BACKGROUND - RED & BLUE
LEGEND - SILVER

AREA S.F.	SIZE (INCHES)	CONN. D.O.T. #	POSTS	ALUM. THK.
3.20	24X24	51-6662	1	.080
7.20	36X36	51-6666	2	.080
3.99	30X24	51-6663	1	.080
8.99	45X36	51-6667	2	.100

M1-4

00

BACKGROUND - SILVER
LEGEND - BLACK

AREA S.F.	SIZE (INCHES)	CONN. D.O.T. #	POSTS	ALUM. THK.
4.00	24	51-6615	1	.080
9.00	36	51-6635	2	.080

M1-5

00

BACKGROUND - SILVER
LEGEND - BLACK

AREA S.F.	SIZE (INCHES)	CONN. D.O.T. #	POSTS	ALUM. THK.
4.00	24	51-6616	1	.080
9.00	36	51-6636	2	.080

M2 - SERIES

M2-1

JCT

AREA S.F.	SIZE (INCHES)	CONN. D.O.T. #	COLOR	ALUM. THK.
2.19	21X15	51-6640	(1)	.080
2.19	21X15	51-6610	(2)	.080

M3 - SERIES

M3-1

NORTH

AREA S.F.	SIZE (INCHES)	CONN. D.O.T. #	COLOR	ALUM. THK.
2.00	24X12	51-6651	(1)	.080
2.00	24X12	51-6611	(2)	.080
3.12	30X15	51-6671	(3)	.080
3.12	30X15	51-6631	(4)	.080

M3-2

EAST

AREA S.F.	SIZE (INCHES)	CONN. D.O.T. #	COLOR	ALUM. THK.
2.00	24X12	51-6652	(1)	.080
2.00	24X12	51-6612	(2)	.080
3.12	30X15	51-6672	(3)	.080
3.12	30X15	51-6632	(4)	.080

M3-3

SOUTH

AREA S.F.	SIZE (INCHES)	CONN. D.O.T. #	COLOR	ALUM. THK.
2.00	24X12	51-6653	(1)	.080
2.00	24X12	51-6613	(2)	.080
3.12	30X15	51-6673	(3)	.080
3.12	30X15	51-6633	(4)	.080

M3-4

WEST

AREA S.F.	SIZE (INCHES)	CONN. D.O.T. #	COLOR	ALUM. THK.
2.00	24X12	51-6654	(1)	.080
2.00	24X12	51-6614	(2)	.080
3.12	30X15	51-6674	(3)	.080
3.12	30X15	51-6634	(4)	.080

M4 - SERIES

M4-5

TO

AREA S.F.	SIZE (INCHES)	CONN. D.O.T. #	COLOR	ALUM. THK.
2.00	24X12	51-6650	(1)	.080
2.00	24X12	51-6620	(2)	.080

M5 - SERIES

M5-1

(L) | (R)

AREA S.F.		SIZE (INCHES)	CONN. D.O.T. #	COLOR	ALUM. THK.
2.19	(L)	21X15	51-2690	(1)	.080
2.19	(R)	21X15	51-2691	(1)	.080
2.19	(L)	21X15	51-2630	(2)	.080
2.19	(R)	21X15	51-2631	(2)	.080

M5-2

(L) | (R)

AREA S.F.		SIZE (INCHES)	CONN. D.O.T. #	COLOR	ALUM. THK.
2.19	(L)	21X15	51-2692	(1)	.080
2.19	(R)	21X15	51-2693	(1)	.080
2.19	(L)	21X15	51-2632	(2)	.080
2.19	(R)	21X15	51-2633	(2)	.080

M6 - SERIES

M6-1

AREA S.F.		SIZE (INCHES)	CONN. D.O.T. #	COLOR	ALUM. THK.
2.19	(L) OR (R)	21X15	51-2686	(1)	.080
2.19	(L) OR (R)	21X15	51-2626	(2)	.080

M6-2

(L) | (R)

AREA S.F.		SIZE (INCHES)	CONN. D.O.T. #	COLOR	ALUM. THK.
2.19	(L)	21X15	51-2688	(1)	.080
2.19	(R)	21X15	51-2689	(1)	.080
2.19	(L)	21X15	51-2628	(2)	.080
2.19	(R)	21X15	51-2629	(2)	.080

M6-3

AREA S.F.	SIZE (INCHES)	CONN. D.O.T. #	COLOR	ALUM. THK.
2.19	21X15	51-2685	(1)	.080
2.19	21X15	51-2625	(2)	.080

M6-4

AREA S.F.	SIZE (INCHES)	CONN. D.O.T. #	COLOR	ALUM. THK.
2.19	21X15	51-2687	(1)	.080
2.19	21X15	51-2627	(2)	.080

NOTES:

1. FOR SPECIFIC SIGN DESIGN CONTACT CONN. D.O.T., DIVISION OF TRAFFIC ENGINEERING. FOR BOLT HOLE PATTERN REFER TO FHWA PUBLICATION "STANDARD HIGHWAY SIGNS" AS SPECIFIED IN THE MUTCD. SIGNS OF DIFFERENT DIMENSIONS TO BE ERECTED ON THE SAME POSTS. OR SPAN/MAST ARM MOUNTED MAY REQUIRE SPECIAL BOLT HOLE PATTERNS.
2. POSTS - SEE TYP. SHEET (SHT #9)- "TYP. METAL SIGN POSTS AND SIGN MOUNTING DETAILS."
   SEE TYP. SHEET (SHT #9A)- "TYP. SQUARE METAL SIGN POSTS & SIGN MOUNTING DETAILS."
3. POSTS - TYPE A (EXCEPT WHERE NOTED WITH A "B" FOR TYPE B)
   ▶ IF METAL SIGN POSTS USED. TYPE "B" REQUIRED.
   IF SQUARE METAL SIGN POSTS USED. TYPE "C" REQUIRED.
4. SIGNS SHALL BE FABRICATED OF ONE CONTINUOUS PIECE OF SHEET ALUMINUM. SPLICING OF SHEET ALUMINUM WILL NOT BE ACCEPTED.

** FOR ARROWS USE M5 & M6 SERIES (1).

COLORS:

I - SERIES
BACKGROUND-GREEN, LEGEND-SILVER (EXCEPT AS NOTED)

M2 - M6 SERIES
(1) & (3) BACKGROUND-BLUE, LEGEND-SILVER
(2) & (4) BACKGROUND-SILVER, LEGEND-BLACK

D - SERIES
D-1, 2, 3, 4, 10 BACKGROUND-GREEN, LEGEND-SILVER
D-9 BACKGROUND-BLUE, LEGEND-SILVER
D-7 BACKGROUND-BROWN, LEGEND-SILVER
ALL OTHER D-SERIES AS NOTED

E - SERIES
BACKGROUND-GREEN, LEGEND-SILVER

ALL COLORS SHALL BE TYPE III REFLECTIVE SHEETING WITH THE EXCEPTION OF BLACK WHICH SHALL BE OPAQUE. AND SILVER BACKGROUND SIDE MOUNTED SIGNS WHICH SHALL BE TYPE I REFLECTIVE SHEETING.

REV.	DATE	INIT.	DESCRIPTION
2	1-03	CSH	ADDED COLUMN FOR AREA IN SQ. FT.
1	2-01	JFC	REVISED 51-6802 & 51-6803 FOR ACCURACY PURPOSES

REVISIONS

SCALE - NONE

ORIGINAL SIGNED

DIVISION OF TRAFFIC ENGINEERING CADD

STATE OF CONNECTICUT
DEPARTMENT OF TRANSPORTATION

SUBMITTED BY: JOHN F. CAREY DATE: 8-21-98
APPROVED BY: JOHN A. VIVARI DATE: 8-25-98

OFFICE OF ENGINEERING

PROJECT TITLE: BRIDGE NO. 00548 TR 803 OVER I-84 W.B. U.S. 7 N.B. AND BEAVER BROOK

CADD - FILENAME: ZENG2003.DGN

TOWN: DANBURY

DRAWING TITLE: SIGN FACE SHEET ALUMINUM D.E.I & M - SERIES SIGNS TYPICAL DETAILS

PROJECT NO.: 34-334
DRAWING NO.: TTS-001
SHEET NO.: 21