# VOLUME 02, SUBSET 03 - STRUCTURES
## INDEX OF DRAWINGS

| DRAWING NUMBER | DRAWING TITLE | DRAWING NUMBER | DRAWING TITLE |
|---|---|---|---|
| BSM-0 | INDEX OF DRAWINGS | | |
| BSM-1 | BREAKAWAY SIGN SUPPORTS GENERAL NOTES | | |
| BSM-2 | BREAKAWAY SIGN SUPPORTS POST SELECTION TABLE 1 (W ≤ 15 FT.) | | |
| BSM-3 | BREAKAWAY SIGN SUPPORTS POST SELECTION TABLE 2 (W > 15 FT.) | | |
| BSM-4 | BREAKAWAY SIGN SUPPORTS FOUNDATION DETAILS | | |
| BSM-5 | BREAKAWAY SIGN SUPPORTS BRACKET DETAILS | | |
| BSM-6 | BREAKAWAY SIGN SUPPORTS HINGE DETAILS | | |
| BSM-7 | EXTRUDED ALUMINUM SIGN PANEL MANUFACTURING DETAILS | | |
| BSM-8 | EXTRUDED ALUMINUM SIGN PANEL CONNECTION DETAILS | | |

THE DESIGN APPEARS TO CONFORM TO APPLICABLE CRITERIA. APPROVAL IS NOT TO BE CONSTRUED TO MEAN THAT ALL ASPECTS OF THE DESIGN HAVE BEEN PERSONALLY CHECKED BY THE UNDERSIGNED.

Mary E. Baker, P.E.
2016.08.08
15:22:34-04'00'

TRANSPORTATION PRINCIPAL ENGINEER

### VOLUME 02 SUBSETS

| SUBSET NO. | SUBSET TITLE | *SUBSET SHEET COUNT |
|---|---|---|
| 01 | PROJECT 158-211 | 54 |
| 02 | REHAB/ORIGINAL BRIDGE PLANS | 80 |
| 03 | TYPICAL BREAKAWAY SIGN POST | 9 |

| REV. | DATE | REVISION DESCRIPTION | SHEET NO. |
|---|---|---|---|
| - | - | - | - |
| - | - | - | - |
| - | - | - | - |
| - | - | - | - |
| - | - | - | - |
| - | - | - | - |

THE INFORMATION, INCLUDING ESTIMATED QUANTITIES OF WORK, SHOWN ON THESE SHEETS IS BASED ON LIMITED INVESTIGATIONS BY THE STATE AND IS IN NO WAY WARRANTED TO INDICATE THE CONDITIONS OF ACTUAL QUANTITIES OF WORK WHICH WILL BE REQUIRED.

Plotted Date: 7/26/2016

DESIGNER/DRAFTER: MC
CHECKED BY: DSG/JRH
SCALE AS NOTED

STATE OF CONNECTICUT
DEPARTMENT OF TRANSPORTATION

Filename: ...\SB_Breakaway_Signpost_BSM0_Master_Title_Sheet.dgn

SIGNATURE/BLOCK: OFFICE OF ENGINEERING
APPROVED BY:

PROJECT TITLE: MERRITT PARKWAY (ROUTE 15) SAFETY IMPROVEMENTS, RESURFACING, ENHANCEMENTS AND BRIDGE IMPROVEMENTS

TOWN: WESTPORT/FAIRFIELD

DRAWING TITLE: INDEX OF DRAWINGS

PROJECT NO. 158-211
DRAWING NO. BSM-0
SHEET NO. 02.03.01

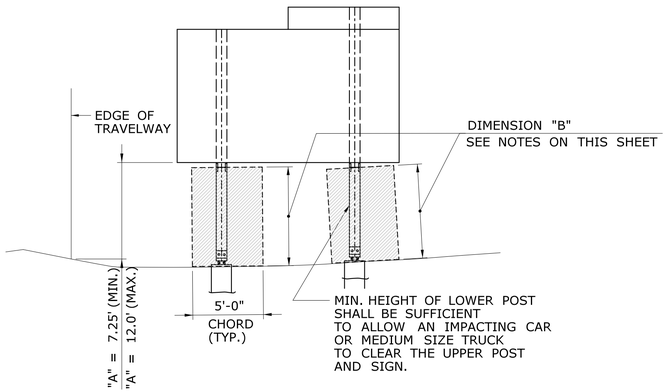


LEVEL TO SHALLOW SLOPES

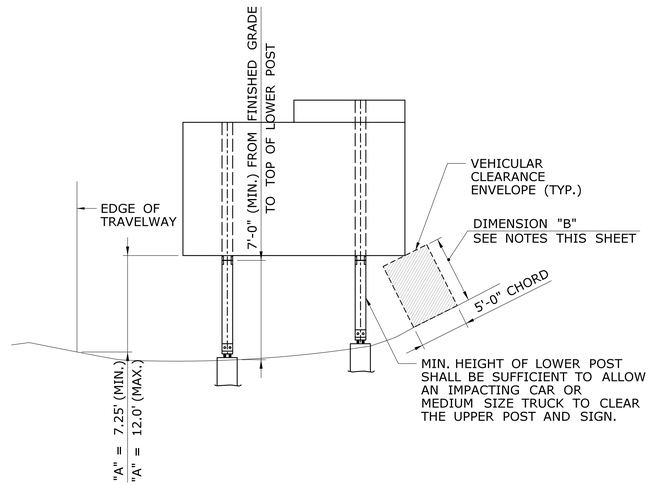


STEEPER SLOPES

**SIGN LOCATION - CUT**

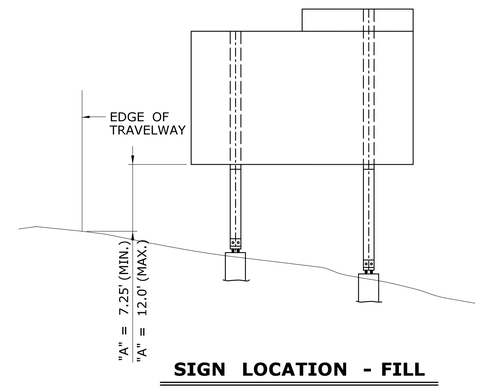


**SIGN LOCATION - FILL**

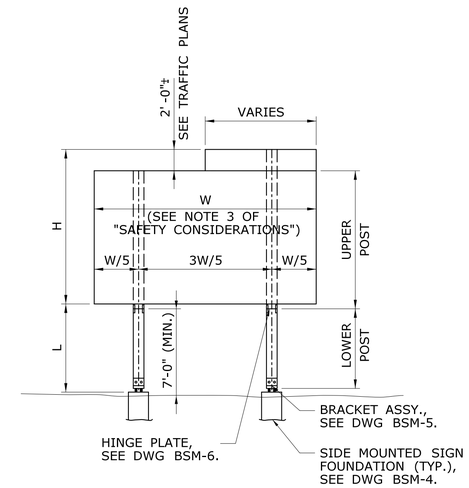


**TYPICAL POST MOUNTED SIGN**

## NOTES FOR DETERMINING DIMENSION "B"

1. DIMENSION "B" IS THE SMALLER OF:
   A. THE CLEAR DISTANCE BETWEEN THE BOTTOM OF SIGN AND THE FINISHED GRADE.
   B. THE CLEAR DISTANCE BETWEEN THE BOTTOM OF UPPER POST AND THE FINISHED GRADE.
2. DIMENSION "B" SHALL TYPICALLY BE A MINIMUM OF 7'-0" TO CLEAR AN IMPACTING CAR OR MEDIUM SIZE TRUCK.
3. WHEN DIMENSION "A" WOULD EXCEED 12'-0", CONSIDERATION MAY BE GIVEN TO REDUCING DIMENSION "B" IN ACCORDANCE WITH PROVISIONS OF NOTE 4.
4. DIMENSION "B" MAY BE LESS THAN 7'-0":
   A. IF THE POST IS OUT OF THE CLEAR ZONE.
   B. IF THE POST IS WITHIN THE CLEAR ZONE BUT SHIELDED BY AN APPROPRIATE BARRIER SYSTEM.
   C. IN NO CASE SHALL DIMENSION "B" BE LESS THAN 2'-6".
5. IF FIELD CONDITIONS EXCEED THESE REQUIREMENTS, CONTACT THE ENGINEER FOR DIRECTION.

## SAFETY CONSIDERATIONS

1. THE HINGE BETWEEN THE UPPER AND LOWER POSTS SHALL BE AT LEAST 7 FT. ABOVE THE GROUND.
2. NO SUPPLEMENTARY SIGNS SHALL BE ATTACHED BELOW THE HINGES.
3. THE POST SPACING SHALL BE 3/5 W EXCEPT AS NOTED BELOW:

| UNIT WEIGHT OF POST | POST SPACING REQUIREMENTS |
|---|---|
| LESS THAN 18 PLF | NO RESTRICTIONS ON POST SPACING ** |
| FROM 18 PLF TO 45 PLF | PROVIDE AT LEAST 7 FT. CLEAR DISTANCE BETWEEN POSTS *** |
| EXCEEDS 45 PLF | RELOCATE SIGN OUTSIDE OF CLEAR ZONE OR SHIELD SIGN FROM VEHICULAR IMPACT AS DIRECTED BY THE ENGINEER |

** IF THE TOTAL COMBINED WEIGHT OF ONE LOWER POST AND TWO BRACKETS EXCEEDS 600 LBS OR THE COMBINED WEIGHT OF TWO POSTS AND FOUR BRACKETS LOCATED WITHIN A CLEAR DISTANCE OF 7 FT OF EACH OTHER EXCEEDS 600 LBS, THE SIGN SHALL BE RELOCATED OUTSIDE OF THE CLEAR ZONE OR SHALL BE PROPERLY SHIELDED FROM VEHICULAR IMPACT AS DIRECTED BY THE ENGINEER. SEE "TABLE 1 - BRACKET DATA" ON BSM-5 FOR BRACKET WEIGHT.

*** IF THE REQUIRED CLEAR DISTANCE CANNOT BE ATTAINED, THE ENGINEER MAY DIRECT THAT THE SIGN BE RELOCATED OUTSIDE THE CLEAR ZONE OR THAT IT BE PROPERLY SHIELDED FROM VEHICULAR IMPACT.

## SELECTING A POST SIZE, BRACKET NUMBER, AND HINGE TYPE

1. DETERMINE THE REQUIRED SIGN DIMENSIONS AND POST HEIGHTS (SEE "TYPICAL POST MOUNTED SIGN" DETAIL, THIS SHEET).

   W = SIGN WIDTH (HORIZONTAL DIMENSION)
   H = SIGN HEIGHT (VERTICAL DIMENSION) (ADD CROWN HEIGHT WHEN APPLICABLE)
   L = POST HEIGHT (THE DISTANCE BETWEEN THE TOP OF THE FOUNDATION AND THE BOTTOM OF THE SIGN MEASURED AT THE TALLER POST)

2. ENTER "POST SELECTION TABLE 1 AND 2" ON DWG BSM-2 AND BSM-3 WITH THE DESIRED VALUES OF W, H, AND L. ROUND UP TO THE NEAREST VALUES IN THE TABLE. READ THE CORRESPONDING POST SIZE AND BRACKET NUMBER. REFER TO DWG BSM-5 FOR BRACKET TYPE AND BSM-6 FOR TYPICAL HINGE REQUIREMENTS.

   EXAMPLE: W = 8', L = 10', H = 14'

   ENTER "POST SELECTION TABLE 1" ON DWG BSM-2 SINCE TABLE 1 IS APPLICABLE FOR SIGN WIDTH ≤ 15'. LOCATE THE FOLLOWING CELL:

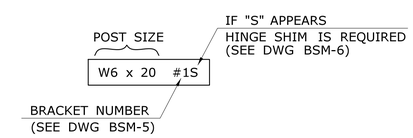


3. IF NO POST SIZE IS SHOWN FOR THE COMBINATION OF DIMENSIONS W, L, AND H, THE ENGINEER WILL EITHER PROVIDE A DESIGN FOR THE POST AND FOUNDATION OR RELOCATE THE SIGN.

## NOTES ON TOTAL HEIGHT OF SIGN POSTS

1. UPPER SIGN POSTS SHALL EXTEND TO THE TOP OF FULL WIDTH SIGN PANEL OR THE TOP OF CROWN, WHICHEVER IS HIGHER.
2. FOR SIGN OR CROWN PANEL RETROFIT, THE EXISTING SIGN POSTS SHALL BE REPLACED WITH NEW POSTS OR EXTENDED WITH ADDITIONAL SECTIONS USING HINGE ASSEMBLIES. REFER TO TRAFFIC TYPICAL SHEETS "EXTRUDED SIGN PANEL - RETROFIT DETAIL".

## BREAKAWAY SIGN SUPPORT TYPICAL SHEETS ARE IN US CUSTOMARY UNITS

FOR METRIC PROJECTS:
1. DETERMINE US CUSTOMARY POST SIZE FROM THE POST SELECTION TABLE.
2. CALCULATE THE WEIGHT OF POSTS IN US CUSTOMARY UNITS (CWT) THEN USE THE FOLLOWING CONVERSION FACTOR TO CONVERT CWT TO KILOGRAMS.

1 CWT = 45.36 KG

EXAMPLE: 120 CWT x 45.36 KG/CWT = 5443 KG

## TABLE OF CONTENT


| DWG. NO. | DESCRIPTION |
|---|---|
| BSM-1 | GENERAL NOTES |
| BSM-2 | POST SELECTION TABLE 1 (W ≤ 15 FT.) |
| BSM-3 | POST SELECTION TABLE 2 (W > 15 FT.) |
| BSM-4 | FOUNDATION DETAILS |
| BSM-5 | BRACKET DETAILS |
| BSM-6 | HINGE DETAILS |


| REV. | DATE | REVISION DESCRIPTION | SHEET NO. |
|---|---|---|---|
| - | - | - | - |
| - | - | - | - |
| - | - | - | - |
| - | - | - | - |
| - | - | - | - |
| - | - | - | - |

THE INFORMATION, INCLUDING ESTIMATED QUANTITIES OF WORK, SHOWN ON THESE SHEETS IS BASED ON LIMITED INVESTIGATIONS BY THE STATE AND IS IN NO WAY WARRANTED TO INDICATE THE CONDITIONS OF ACTUAL QUANTITIES OF WORK WHICH WILL BE REQUIRED.

Plotted Date: 6/2/2016

DESIGNER/DRAFTER: **BKC**
CHECKED BY: **JRH**
SCALE AS NOTED

**STATE OF CONNECTICUT**
**DEPARTMENT OF TRANSPORTATION**

Filename: ...\SB_Breakaway_Signpost_BSM1_General Note.dgn

SIGNATURE/BLOCK: **OFFICE OF ENGINEERING**
APPROVED BY: DATE:

PROJECT TITLE: **MERRITT PARKWAY (ROUTE 15) SAFETY IMPROVEMENTS, RESURFACING, ENHANCEMENTS AND BRIDGE IMPROVEMENTS**

TOWN: **WESTPORT/FAIRFIELD**
DRAWING TITLE: **BREAKAWAY SIGN SUPPORTS GENERAL NOTES**

PROJECT NO. **158-211**
DRAWING NO. **BSM-1**
SHEET NO. 02.03.02

# POST SELECTION TABLE 1

| W | L | H (Sign Height + Crown Height) | | | | | | | | | | | | | | | | | | |
|---|---|---|---|---|---|---|---|---|---|---|---|---|---|---|---|---|---|---|---|---|
| | | 4 ft | 5 ft | 6 ft | 7 ft | 8 ft | 9 ft | 10 ft | 11 ft | 12 ft | 13 ft | 14 ft | 15 ft | 16 ft | 17 ft | 18 ft | 19 ft | 20 ft | 21 ft | 22 ft |
| 8 ft | 7 ft | W6 x 9 #3 | W6 x 9 #3 | W6 x 9 #2 | W6 x 9 #2 | W6 x 9 #2 | W6 x 12 #2 | W6 x 12 #2 | W6 x 12 #2 | W6 x 15 #2 | W6 x 15 #1 | W6 x 15 #1S | W6 x 16 #1S | W8 x 18 #2S | W8 x 21 #1S | W10 x 22 #2 | W10 x 22 #2 | W10 x 26 #2 | W10 x 26 #1S | W10 x 26 #1S |
| | 8 ft | W6 x 9 #2 | W6 x 9 #2 | W6 x 9 #2 | W6 x 9 #2 | W6 x 12 #2 | W6 x 12 #2 | W6 x 12 #2 | W6 x 15 #2 | W6 x 15 #1 | W6 x 15 #1 | W6 x 16 #1S | W8 x 18 #1 | W8 x 21 #1S | W8 x 21 #1S | W10 x 22 #2 | W10 x 26 #1 | W10 x 26 #1 | W10 x 26 #1S | W10 x 30 #1S |
| | 9 ft | W6 x 9 #2 | W6 x 9 #2 | W6 x 9 #2 | W6 x 12 #2 | W6 x 12 #2 | W6 x 12 #2 | W6 x 15 #1 | W6 x 15 #1 | W6 x 15 #1 | W6 x 16 #1 | W8 x 18 #1 | W6 x 20 #1S | W8 x 21 #1S | W8 x 21 #1S | W10 x 26 #1 | W10 x 26 #1 | W10 x 26 #1 | W10 x 30 #1S | W12 x 30 #1 |
| | 10 ft | W6 x 9 #2 | W6 x 9 #2 | W6 x 12 #2 | W6 x 12 #2 | W6 x 12 #1 | W6 x 15 #1 | W6 x 15 #1 | W6 x 15 #1 | W6 x 15 #1 | W8 x 18 #1 | W6 x 20 #1S | W6 x 20 #1S | W8 x 21 #1S | W10 x 26 #1 | W10 x 26 #1 | W10 x 26 #1 | - | - | - |
| | 11 ft | W6 x 9 #2 | W6 x 9 #2 | W6 x 12 #1 | W6 x 12 #1 | W6 x 15 #1 | W6 x 15 #1 | W6 x 15 #1 | W6 x 15 #1 | W8 x 18 #1 | W6 x 20 #1 | W6 x 20 #1S | W8 x 21 #1 | - | - | - | - | - | - | - |
| | 12 ft | W6 x 9 #2 | W6 x 12 #1 | W6 x 12 #1 | W6 x 15 #1 | W6 x 15 #1 | W6 x 15 #1 | W6 x 15 #1 | W8 x 18 #1 | W6 x 20 #1 | W6 x 20 #1 | W6 x 20 #1S | - | - | - | - | - | - | - | - |
| | 13 ft | W6 x 12 #1 | W6 x 12 #1 | W6 x 12 #1 | W6 x 15 #1 | W6 x 15 #1 | W6 x 15 #1 | W8 x 18 #1 | W8 x 18 #1 | W6 x 20 #1 | W6 x 20 #1 | - | - | - | - | - | - | - | - | - |
| | 14 ft | W6 x 12 #1 | W6 x 12 #1 | W6 x 15 #1 | W6 x 15 #1 | W6 x 15 #1 | W6 x 16 #1 | W8 x 18 #1 | W6 x 20 #1 | W6 x 20 #1 | - | - | - | - | - | - | - | - | - | - |
| | 15 ft | W6 x 12 #1 | W6 x 15 #1 | W6 x 15 #1 | W6 x 15 #1 | W6 x 15 #1 | W8 x 18 #1 | - | - | - | - | - | - | - | - | - | - | - | - | - |
| | 16 ft | W6 x 12 #1 | W6 x 15 #1 | W6 x 15 #1 | W6 x 15 #1 | - | - | - | - | - | - | - | - | - | - | - | - | - | - | - |
| 9 ft | 7 ft | W6 x 9 #3 | W6 x 9 #3 | W6 x 9 #2 | W6 x 9 #2 | W8 x 10 #2 | W6 x 12 #2 | W6 x 12 #2 | W6 x 15 #2 | W6 x 15 #2 | W6 x 15 #1S | W6 x 15 #1S | W8 x 18 #2S | W8 x 21 #2S | W10 x 22 #2 | W10 x 22 #2 | W10 x 26 #2 | W10 x 26 #2S | W10 x 26 #1S | W12 x 30 #2S |
| | 8 ft | W6 x 9 #2 | W6 x 9 #2 | W6 x 9 #2 | W8 x 10 #2 | W6 x 12 #2 | W6 x 12 #2 | W6 x 15 #2 | W6 x 15 #2 | W6 x 15 #1 | W6 x 15 #1S | W8 x 18 #2 | W8 x 21 #2S | W8 x 21 #1S | W10 x 22 #2 | W10 x 26 #2 | W10 x 26 #1 | W10 x 26 #1S | W12 x 30 #2 | W12 x 30 #2S |
| | 9 ft | W6 x 9 #2 | W6 x 9 #2 | W6 x 9 #2 | W6 x 12 #2 | W6 x 12 #2 | W6 x 15 #2 | W6 x 15 #1 | W6 x 15 #1 | W6 x 15 #1 | W8 x 18 #2 | W6 x 20 #1S | W8 x 21 #1S | W8 x 21 #1S | W10 x 26 #2 | W10 x 26 #2 | W10 x 26 #1 | W10 x 30 #1S | W12 x 30 #1 | - |
| | 10 ft | W6 x 9 #2 | W6 x 9 #2 | W6 x 12 #2 | W6 x 12 #2 | W6 x 15 #1 | W6 x 15 #1 | W6 x 15 #1 | W6 x 15 #1 | W8 x 18 #1 | W6 x 20 #1S | W6 x 20 #1S | W8 x 21 #1S | W10 x 26 #1 | W10 x 26 #1 | W10 x 26 #1 | - | - | - | - |
| | 11 ft | W6 x 9 #2 | W6 x 12 #2 | W6 x 12 #1 | W6 x 12 #1 | W6 x 15 #1 | W6 x 15 #1 | W6 x 15 #1 | W8 x 18 #1 | W8 x 18 #1 | W6 x 20 #1S | W8 x 21 #1 | - | - | - | - | - | - | - | - |
| | 12 ft | W6 x 9 #2 | W6 x 12 #1 | W6 x 12 #1 | W6 x 15 #1 | W6 x 15 #1 | W6 x 15 #1 | W8 x 18 #1 | W8 x 18 #1 | W6 x 20 #1S | - | - | - | - | - | - | - | - | - | - |
| | 13 ft | W6 x 12 #1 | W6 x 12 #1 | W6 x 15 #1 | W6 x 15 #1 | W6 x 15 #1 | W6 x 16 #1 | W8 x 18 #1 | W6 x 20 #1 | W6 x 20 #1 | - | - | - | - | - | - | - | - | - | - |
| | 14 ft | W6 x 12 #1 | W6 x 12 #1 | W6 x 15 #1 | W6 x 15 #1 | W6 x 15 #1 | W8 x 18 #1 | W6 x 20 #1 | W6 x 20 #1 | W6 x 20 #1 | - | - | - | - | - | - | - | - | - | - |
| | 15 ft | W6 x 12 #1 | W6 x 15 #1 | W6 x 15 #1 | W6 x 15 #1 | W8 x 18 #1 | - | - | - | - | - | - | - | - | - | - | - | - | - | - |
| | 16 ft | W6 x 15 #1 | W6 x 15 #1 | W6 x 15 #1 | - | - | - | - | - | - | - | - | - | - | - | - | - | - | - | - |
| 10 ft | 7 ft | W6 x 9 #3 | W6 x 9 #3 | W6 x 9 #2 | W6 x 9 #2 | W6 x 12 #2 | W6 x 12 #2 | W6 x 12 #2 | W6 x 15 #2 | W6 x 15 #2 | W6 x 15 #1S | W8 x 18 #2 | W8 x 18 #2S | W10 x 22 #2 | W10 x 22 #2 | W10 x 26 #2 | W10 x 26 #2S | W10 x 26 #2S | W12 x 30 #2S | W14 x 30 #2S |
| | 8 ft | W6 x 9 #2 | W6 x 9 #2 | W6 x 9 #2 | W6 x 12 #2 | W6 x 12 #2 | W6 x 12 #2 | W6 x 15 #2 | W6 x 15 #1 | W6 x 15 #1 | W8 x 18 #2 | W8 x 18 #2S | W8 x 21 #1S | W10 x 22 #2 | W10 x 26 #2 | W10 x 26 #2 | W10 x 26 #1S | W12 x 30 #2 | W14 x 30 #2 | - |
| | 9 ft | W6 x 9 #2 | W6 x 9 #2 | W6 x 12 #2 | W6 x 12 #2 | W6 x 12 #2 | W6 x 15 #2 | W6 x 15 #1 | W6 x 15 #1 | W8 x 18 #2 | W8 x 18 #1 | W6 x 20 #1S | W8 x 21 #1S | W10 x 26 #2 | W10 x 26 #2 | W10 x 26 #1 | W10 x 30 #1S | W12 x 30 #2 | - | - |
| | 10 ft | W6 x 9 #2 | W6 x 12 #2 | W6 x 12 #2 | W6 x 12 #2 | W6 x 15 #1 | W6 x 15 #1 | W6 x 15 #1 | W6 x 16 #1 | W8 x 18 #1 | W6 x 20 #1S | W8 x 21 #1S | W10 x 26 #2 | W10 x 26 #1 | W10 x 26 #1 | - | - | - | - | - |
| | 11 ft | W6 x 9 #2 | W6 x 12 #2 | W6 x 12 #1 | W6 x 12 #1 | W6 x 15 #1 | W6 x 15 #1 | W6 x 15 #1 | W6 x 16 #1 | W8 x 18 #1 | W6 x 20 #1 | W6 x 20 #1S | W8 x 24 #1S | - | - | - | - | - | - | - |
| | 12 ft | W6 x 12 #2 | W6 x 12 #1 | W6 x 15 #1 | W6 x 15 #1 | W6 x 15 #1 | W6 x 15 #1 | W8 x 18 #1 | W6 x 20 #1 | W6 x 20 #1 | W10 x 22 #1 | - | - | - | - | - | - | - | - | - |
| | 13 ft | W6 x 12 #1 | W6 x 12 #1 | W6 x 15 #1 | W6 x 15 #1 | W6 x 15 #1 | W8 x 18 #1 | W6 x 20 #1 | W6 x 20 #1 | W8 x 21 #1 | - | - | - | - | - | - | - | - | - | - |
| | 14 ft | W6 x 12 #1 | W6 x 15 #1 | W6 x 15 #1 | W6 x 15 #1 | W8 x 18 #1 | W6 x 20 #1 | W6 x 20 #1 | W6 x 20 #1 | - | - | - | - | - | - | - | - | - | - | - |
| | 15 ft | W6 x 12 #1 | W6 x 15 #1 | W6 x 15 #1 | W6 x 15 #1 | W8 x 18 #1 | W6 x 20 #1 | W6 x 20 #1 | W6 x 20 #1 | - | - | - | - | - | - | - | - | - | - | - |
| | 16 ft | W6 x 15 #1 | W6 x 15 #1 | W6 x 15 #1 | - | - | - | - | - | - | - | - | - | - | - | - | - | - | - | - |
| 11 ft | 7 ft | W6 x 9 #3 | W6 x 9 #3 | W6 x 9 #2 | W8 x 10 #3 | W6 x 12 #2 | W6 x 12 #2 | W6 x 15 #2 | W6 x 15 #2 | W6 x 15 #2S | W6 x 15 #1S | W8 x 18 #2S | W8 x 21 #2S | W10 x 22 #2 | W10 x 22 #2 | W10 x 26 #2 | W10 x 26 #2S | W12 x 26 #2S | W14 x 30 #2S | W16 x 36 #2S |
| | 8 ft | W6 x 9 #2 | W6 x 9 #2 | W6 x 9 #2 | W6 x 12 #2 | W6 x 12 #2 | W6 x 15 #2 | W6 x 15 #2 | W6 x 15 #1 | W6 x 15 #1S | W8 x 18 #2 | W8 x 21 #2S | W8 x 21 #1S | W10 x 22 #2 | W10 x 26 #2 | W10 x 26 #2S | W12 x 30 #2 | W14 x 30 #2 | - | - |
| | 9 ft | W6 x 9 #2 | W6 x 9 #2 | W6 x 12 #2 | W6 x 12 #2 | W6 x 12 #2 | W6 x 15 #2 | W6 x 15 #2 | W6 x 15 #1 | W8 x 18 #2 | W6 x 20 #1S | W8 x 21 #1S | W10 x 22 #2 | W10 x 26 #2 | W10 x 26 #1 | W10 x 26 #1S | W12 x 30 #2 | - | - | - |
| | 10 ft | W6 x 9 #2 | W6 x 12 #2 | W6 x 12 #2 | W6 x 15 #2 | W6 x 15 #1 | W6 x 15 #1 | W6 x 15 #1 | W8 x 18 #2 | W6 x 20 #1S | W6 x 20 #1S | W8 x 21 #1S | W10 x 26 #2 | W10 x 26 #1 | W10 x 26 #1 | - | - | - | - | - |
| | 11 ft | W6 x 9 #2 | W6 x 12 #2 | W6 x 12 #1 | W6 x 15 #1 | W6 x 15 #1 | W6 x 15 #1 | W8 x 18 #1 | W6 x 20 #1 | W6 x 20 #1S | W8 x 21 #1 | - | - | - | - | - | - | - | - | - |
| | 12 ft | W6 x 12 #2 | W6 x 12 #1 | W6 x 15 #1 | W6 x 15 #1 | W6 x 15 #1 | W8 x 18 #1 | W6 x 20 #1 | W6 x 20 #1 | W8 x 21 #1 | - | - | - | - | - | - | - | - | - | - |
| | 13 ft | W6 x 12 #1 | W6 x 15 #1 | W6 x 15 #1 | W6 x 15 #1 | W8 x 18 #1 | W8 x 18 #1 | W6 x 20 #1 | W6 x 20 #1 | - | - | - | - | - | - | - | - | - | - | - |
| | 14 ft | W6 x 12 #1 | W6 x 15 #1 | W6 x 15 #1 | W8 x 18 #1 | W6 x 20 #1 | W6 x 20 #1 | W6 x 20 #1 | - | - | - | - | - | - | - | - | - | - | - | - |
| | 15 ft | W6 x 15 #1 | W6 x 15 #1 | W6 x 15 #1 | W8 x 18 #1 | - | - | - | - | - | - | - | - | - | - | - | - | - | - | - |
| | 16 ft | W6 x 15 #1 | W6 x 15 #1 | W6 x 15 #1 | - | - | - | - | - | - | - | - | - | - | - | - | - | - | - | - |
| 12 ft | 7 ft | W6 x 9 #3 | W6 x 9 #3 | W6 x 9 #2 | W6 x 12 #2 | W6 x 12 #2 | W6 x 12 #2 | W6 x 15 #2 | W6 x 15 #2 | W6 x 15 #2S | W6 x 15 #1S | W8 x 18 #2S | W8 x 21 #2S | W10 x 22 #2 | W10 x 22 #2 | W10 x 26 #2 | W10 x 26 #2S | W12 x 26 #2S | W14 x 30 #2S | W18 x 35 #2 |
| | 8 ft | W6 x 9 #2 | W6 x 9 #2 | W6 x 12 #2 | W6 x 12 #2 | W6 x 12 #2 | W6 x 15 #2 | W6 x 15 #2 | W6 x 15 #1 | W8 x 18 #2 | W8 x 18 #2S | W8 x 21 #2S | W10 x 22 #2 | W10 x 26 #2 | W10 x 26 #2 | W12 x 26 #2 | W14 x 30 #2 | W18 x 35 #2 | - | - |
| | 9 ft | W6 x 9 #2 | W8 x 10 #2 | W6 x 12 #2 | W6 x 12 #2 | W6 x 15 #2 | W6 x 15 #2 | W6 x 15 #1 | W8 x 18 #2 | W8 x 18 #2 | W8 x 21 #1S | W8 x 21 #1S | W10 x 26 #2 | W10 x 26 #2 | W10 x 26 #1 | W12 x 30 #2 | - | - | - | - |
| | 10 ft | W6 x 9 #2 | W6 x 12 #2 | W6 x 12 #2 | W6 x 15 #2 | W6 x 15 #1 | W6 x 15 #1 | W8 x 18 #2 | W8 x 18 #1 | W6 x 20 #1S | W8 x 21 #1S | W10 x 26 #2 | W10 x 26 #1 | W10 x 26 #1 | - | - | - | - | - | - |
| | 11 ft | W6 x 12 #2 | W6 x 12 #2 | W6 x 15 #1 | W6 x 15 #1 | W6 x 15 #1 | W6 x 16 #1 | W8 x 18 #1 | W6 x 20 #1 | W8 x 21 #1 | - | - | - | - | - | - | - | - | - | - |
| | 12 ft | W6 x 12 #2 | W6 x 12 #1 | W6 x 15 #1 | W6 x 15 #1 | W6 x 15 #1 | W8 x 18 #1 | W6 x 20 #1 | W6 x 20 #1 | - | - | - | - | - | - | - | - | - | - | - |
| | 13 ft | W6 x 12 #1 | W6 x 15 #1 | W6 x 15 #1 | W6 x 15 #1 | W8 x 18 #1 | W6 x 20 #1 | W6 x 20 #1 | - | - | - | - | - | - | - | - | - | - | - | - |
| | 14 ft | W6 x 12 #1 | W6 x 15 #1 | W6 x 15 #1 | W8 x 18 #1 | W6 x 20 #1 | W6 x 20 #1 | W6 x 20 #1 | - | - | - | - | - | - | - | - | - | - | - | - |
| | 15 ft | W6 x 15 #1 | W6 x 15 #1 | W6 x 16 #1 | W8 x 18 #1 | - | - | - | - | - | - | - | - | - | - | - | - | - | - | - |
| | 16 ft | W6 x 15 #1 | W6 x 15 #1 | - | - | - | - | - | - | - | - | - | - | - | - | - | - | - | - | - |
| 13 ft | 7 ft | W6 x 9 #3 | W6 x 9 #2 | W6 x 9 #2 | W6 x 12 #2 | W6 x 12 #2 | W6 x 15 #2 | W6 x 15 #2 | W6 x 15 #2S | W6 x 15 #1S | W8 x 18 #2S | W8 x 21 #2S | W10 x 22 #2 | W10 x 22 #2 | W10 x 26 #2 | W10 x 26 #2S | W12 x 26 #2 | W14 x 30 #2 | W18 x 35 #3 | W18 x 40 #2 |
| | 8 ft | W6 x 9 #2 | W6 x 9 #2 | W6 x 12 #2 | W6 x 12 #2 | W6 x 12 #2 | W6 x 15 #2 | W6 x 15 #2 | W6 x 15 #2 | W6 x 15 #1S | W8 x 18 #2 | W8 x 21 #2S | W8 x 21 #2S | W10 x 22 #2 | W10 x 26 #2 | W10 x 26 #2S | W12 x 30 #2 | W14 x 34 #2 | W18 x 40 #2 | W21 x 44 #3 |
| | 9 ft | W6 x 9 #2 | W6 x 12 #2 | W6 x 12 #2 | W6 x 15 #2 | W6 x 15 #2 | W6 x 15 #1 | W6 x 15 #1 | W8 x 18 #2 | W6 x 20 #1S | W8 x 21 #1S | W10 x 22 #2 | W10 x 26 #2 | W10 x 26 #2 | W12 x 30 #2 | W14 x 30 #2 | W16 x 36 #2 | W18 x 40 #2 | W21 x 44 #2 | - |
| | 10 ft | W6 x 9 #2 | W6 x 12 #2 | W6 x 12 #2 | W6 x 15 #2 | W6 x 15 #1 | W6 x 15 #1 | W8 x 18 #2 | W6 x 20 #1S | W8 x 21 #1 | W10 x 22 #2 | W10 x 26 #2 | W10 x 26 #1 | W12 x 30 #2 | W14 x 30 #2 | W16 x 36 #2 | W18 x 40 #2 | W21 x 44 #2 | - | - |
| | 11 ft | W6 x 12 #2 | W6 x 12 #2 | W6 x 15 #1 | W6 x 15 #1 | W6 x 15 #1 | W8 x 18 #2 | W6 x 20 #1 | W6 x 20 #1S | W8 x 21 #1 | W10 x 26 #2 | W10 x 26 #1 | W10 x 30 #1 | W12 x 30 #2 | W14 x 34 #2 | W18 x 40 #2 | W21 x 44 #2 | - | - | - |
| | 12 ft | W6 x 12 #1 | W6 x 15 #1 | W6 x 15 #1 | W6 x 15 #1 | W8 x 18 #1 | W6 x 20 #1 | W6 x 20 #1 | W8 x 21 #1 | W10 x 26 #1 | W10 x 26 #1 | W10 x 26 #1 | W12 x 30 #2 | W14 x 34 #2 | W16 x 36 #2 | W18 x 40 #2 | - | - | - | - |
| | 13 ft | W6 x 12 #1 | W6 x 15 #1 | W6 x 15 #1 | W6 x 16 #1 | W8 x 18 #1 | W6 x 20 #1 | W8 x 21 #1 | W10 x 26 #1 | W10 x 26 #1 | W10 x 26 #1 | W10 x 30 #1 | W12 x 30 #1 | W16 x 36 #2 | W18 x 40 #2 | - | - | - | - | - |
| | 14 ft | W6 x 15 #1 | W6 x 15 #1 | W6 x 15 #1 | W8 x 18 #1 | W6 x 20 #1 | W6 x 20 #1 | W8 x 24 #1 | W10 x 26 #1 | W10 x 26 #1 | W10 x 30 #1 | W12 x 30 #1 | W14 x 34 #1 | W16 x 40 #2 | - | - | - | - | - | - |
| | 15 ft | W6 x 15 #1 | W6 x 15 #1 | W8 x 18 #1 | W6 x 20 #1 | W6 x 20 #1 | W8 x 24 #1 | W10 x 26 #1 | W10 x 26 #1 | W10 x 30 #1 | W10 x 30 #1 | W14 x 34 #1 | - | - | - | - | - | - | - | - |
| | 16 ft | W6 x 15 #1 | W6 x 16 #1 | W8 x 18 #1 | W6 x 20 #1 | W6 x 20 #1 | W8 x 24 #1 | W10 x 26 #1 | W10 x 30 #1 | W10 x 30 #1 | W14 x 34 #1 | W14 x 34 #1 | - | - | - | - | - | - | - | - |
| 14 ft | 7 ft | W6 x 9 #3 | W6 x 9 #2 | W8 x 10 #3 | W6 x 12 #2 | W6 x 12 #2 | W6 x 15 #2 | W6 x 15 #2 | W6 x 15 #2S | W8 x 18 #2 | W8 x 18 #2S | W10 x 22 #2 | W10 x 22 #2 | W10 x 26 #2 | W10 x 26 #2S | W12 x 26 #2S | W14 x 30 #2S | W18 x 35 #3 | W21 x 44 #3 | - |
| | 8 ft | W6 x 9 #2 | W6 x 9 #2 | W6 x 12 #2 | W6 x 12 #2 | W6 x 15 #2 | W6 x 15 #2 | W6 x 15 #2 | W8 x 18 #2 | W8 x 18 #2S | W8 x 21 #2S | W10 x 22 #2 | W10 x 26 #2 | W10 x 26 #2 | W12 x 26 #2 | W14 x 30 #2 | W18 x 35 #2 | W18 x 40 #2 | W21 x 44 #3 | - |
| | 9 ft | W6 x 9 #2 | W6 x 12 #2 | W6 x 12 #2 | W6 x 15 #2 | W6 x 15 #2 | W6 x 15 #1 | W8 x 18 #2 | W8 x 18 #2 | W8 x 21 #2S | W10 x 22 #2 | W10 x 26 #2 | W10 x 26 #2 | W12 x 26 #2 | W14 x 30 #2 | W16 x 36 #2 | W18 x 40 #2 | W21 x 44 #3 | - | - |
| | 10 ft | W6 x 9 #2 | W6 x 12 #2 | W6 x 12 #2 | W6 x 15 #2 | W6 x 15 #1 | W6 x 15 #1 | W8 x 18 #2 | W8 x 18 #2 | W6 x 20 #1S | W8 x 21 #1S | W10 x 26 #2 | W10 x 26 #2 | W10 x 26 #1 | W12 x 30 #2 | W16 x 36 #2 | W18 x 40 #2 | W21 x 44 #3 | - | - |
| | 11 ft | W6 x 12 #2 | W6 x 12 #2 | W6 x 15 #1 | W6 x 15 #1 | W6 x 16 #1 | W8 x 18 #2 | W6 x 20 #1 | W8 x 21 #1 | W10 x 26 #2 | W10 x 26 #2 | W10 x 26 #1 | W12 x 30 #2 | W14 x 34 #2 | W16 x 36 #2 | W18 x 40 #2 | - | - | - | - |
| | 12 ft | W6 x 12 #1 | W6 x 15 #1 | W6 x 15 #1 | W6 x 15 #1 | W8 x 18 #1 | W6 x 20 #1 | W8 x 21 #1 | W10 x 26 #2 | W10 x 26 #1 | W10 x 30 #1 | W12 x 30 #2 | W14 x 34 #2 | W16 x 36 #2 | W18 x 40 #2 | - | - | - | - | - |
| | 13 ft | W6 x 12 #1 | W6 x 15 #1 | W6 x 15 #1 | W6 x 15 #1 | W8 x 18 #1 | W6 x 20 #1 | W8 x 21 #1 | W10 x 26 #1 | W10 x 26 #1 | W10 x 30 #1 | W12 x 30 #1 | W14 x 34 #2 | W16 x 36 #2 | W18 x 40 #2 | - | - | - | - | - |
| | 14 ft | W6 x 15 #1 | W6 x 15 #1 | W6 x 15 #1 | W8 x 18 #1 | W6 x 20 #1 | W6 x 20 #1 | W8 x 24 #1 | W10 x 26 #1 | W10 x 26 #1 | W10 x 30 #1 | W12 x 30 #1 | W14 x 34 #2 | W16 x 36 #2 | W18 x 40 #2 | - | - | - | - | - |
| | 15 ft | W6 x 15 #1 | W6 x 15 #1 | W8 x 18 #1 | W6 x 20 #1 | W6 x 20 #1 | W8 x 24 #1 | W10 x 26 #1 | W10 x 30 #1 | W10 x 30 #1 | W14 x 34 #1 | W14 x 34 #1 | W16 x 36 #2 | W18 x 40 #2 | - | - | - | - | - | - |
| | 16 ft | W6 x 15 #1 | W8 x 18 #1 | W6 x 20 #1 | W6 x 20 #1 | W8 x 24 #1 | W10 x 26 #1 | W10 x 30 #1 | W12 x 30 #1 | W14 x 34 #1 | - | - | - | - | - | - | - | - | - | - |
| 15 ft | 7 ft | - | W6 x 9 #2 | W8 x 10 #3 | W6 x 12 #2 | W12 x 14 #3 | W6 x 15 #2 | W6 x 15 #2S | W6 x 15 #2S | W8 x 18 #2S | W8 x 21 #2S | W10 x 22 #2 | W10 x 22 #2 | W10 x 26 #2S | W12 x 26 #2 | W14 x 30 #2 | W18 x 35 #3 | W18 x 40 #3 | W21 x 44 #3 | - |
| | 8 ft | - | W8 x 10 #3 | W6 x 12 #2 | W12 x 14 #3 | W6 x 15 #2 | W6 x 15 #2 | W6 x 15 #2S | W8 x 18 #2 | W8 x 21 #2S | W10 x 22 #2 | W10 x 22 #2 | W10 x 26 #2 | W12 x 26 #2 | W14 x 30 #2 | W18 x 35 #3 | W18 x 40 #2 | W21 x 44 #3 | - | - |
| | 9 ft | - | W6 x 12 #2 | W6 x 12 #2 | W6 x 15 #2 | W6 x 15 #2 | W6 x 15 #1 | W8 x 18 #2 | W6 x 20 #1S | W8 x 21 #2S | W10 x 22 #2 | W10 x 26 #2 | W10 x 26 #2 | W12 x 30 #2 | W14 x 34 #2 | W18 x 40 #2 | W21 x 44 #3 | - | - | - |
| | 10 ft | - | W6 x 12 #2 | W6 x 15 #2 | W6 x 15 #2 | W6 x 15 #1 | W8 x 18 #2 | W6 x 20 #1S | W8 x 21 #1 | W10 x 22 #2 | W10 x 26 #2 | W10 x 26 #2 | W12 x 30 #2 | W14 x 30 #2 | W16 x 36 #2 | W18 x 40 #2 | W21 x 44 #2 | - | - | - |
| | 11 ft | - | W6 x 15 #2 | W6 x 15 #1 | W6 x 15 #1 | W8 x 18 #2 | W6 x 20 #1 | W8 x 21 #1 | W10 x 22 #2 | W10 x 26 #2 | W10 x 26 #1 | W10 x 30 #1 | W14 x 30 #2 | W16 x 36 #2 | W18 x 40 #2 | W21 x 44 #2 | - | - | - | - |
| | 12 ft | - | W6 x 15 #1 | W6 x 15 #1 | W6 x 16 #1 | W8 x 18 #1 | W6 x 20 #1 | W8 x 21 #1 | W10 x 26 #2 | W10 x 26 #1 | W10 x 30 #1 | W12 x 30 #2 | W14 x 34 #2 | W18 x 40 #2 | W21 x 44 #2 | - | - | - | - | - |
| | 13 ft | - | W6 x 15 #1 | W6 x 15 #1 | W8 x 18 #1 | W6 x 20 #1 | W8 x 21 #1 | W10 x 26 #1 | W10 x 26 #1 | W10 x 26 #1 | W12 x 30 #2 | W14 x 34 #2 | W16 x 36 #2 | W18 x 40 #2 | - | - | - | - | - | - |
| | 14 ft | - | W6 x 15 #1 | W8 x 18 #1 | W6 x 20 #1 | W6 x 20 #1 | W8 x 24 #1 | W10 x 26 #1 | W10 x 26 #1 | W10 x 30 #1 | W12 x 30 #1 | W16 x 36 #2 | W18 x 40 #2 | - | - | - | - | - | - | - |
| | 15 ft | - | W6 x 16 #1 | W8 x 18 #1 | W6 x 20 #1 | W8 x 24 #1 | W10 x 26 #1 | W10 x 26 #1 | W10 x 30 #1 | W12 x 30 #1 | W14 x 34 #1 | - | - | - | - | - | - | - | - | - |
| | 16 ft | - | W8 x 18 #1 | W6 x 20 #1 | W6 x 20 #1 | W8 x 24 #1 | W10 x 26 #1 | W10 x 30 #1 | W10 x 30 #1 | W14 x 34 #1 | - | - | - | - | - | - | - | - | - | - |

| REV. | DATE | REVISION DESCRIPTION | SHEET NO. |
|---|---|---|---|
| - | - | - | - |
| - | - | - | - |
| - | - | - | - |
| - | - | - | - |
| - | - | - | - |
| - | - | - | - |

THE INFORMATION, INCLUDING ESTIMATED QUANTITIES OF WORK, SHOWN ON THESE SHEETS IS BASED ON LIMITED INVESTIGATIONS BY THE STATE AND IS IN NO WAY WARRANTED TO INDICATE THE CONDITIONS OF ACTUAL QUANTITIES OF WORK WHICH WILL BE REQUIRED.

Plotted Date: 6/2/2016

DESIGNER/DRAFTER: BKC

CHECKED BY: JRH

SCALE AS NOTED

STATE OF CONNECTICUT
DEPARTMENT OF TRANSPORTATION

Filename: ...\SB_Breakaway_Signpost_BSM2_PostSelectionTable_1.dgn

SIGNATURE/BLOCK: OFFICE OF ENGINEERING

APPROVED BY: DATE:

PROJECT TITLE: MERRITT PARKWAY (ROUTE 15) SAFETY IMPROVEMENTS, RESURFACING, ENHANCEMENTS AND BRIDGE IMPROVEMENTS

TOWN: WESTPORT/FAIRFIELD

DRAWING TITLE: BREAKAWAY SIGN SUPPORTS POST SELECTION TABLE 1

PROJECT NO. 158-211

DRAWING NO. BSM-2

SHEET NO. 02.03.03

# POST SELECTION TABLE 2

| W | L | H (Sign Height + Crown Height) | | | | | | | | | | | | | | | | | | |
|---|---|---|---|---|---|---|---|---|---|---|---|---|---|---|---|---|---|---|---|---|
| | | 4 ft | 5 ft | 6 ft | 7 ft | 8 ft | 9 ft | 10 ft | 11 ft | 12 ft | 13 ft | 14 ft | 15 ft | 16 ft | 17 ft | 18 ft | 19 ft | 20 ft | 21 ft | 22 ft |
| 16 ft | 7 ft | - | W6 x 9 #2 | W6 x 12 #2 | W6 x 12 #2 | W6 x 15 #2 | W6 x 15 #2 | W6 x 15 #2S | W8 x 18 #2 | W8 x 18 #2S | W10 x 22 #2 | W10 x 22 #2 | W10 x 26 #2 | W10 x 26 #2S | W12 x 26 #2S | W18 x 35 #3 | W18 x 35 #3 | W21 x 44 #3 | - | - |
| | 8 ft | - | W8 x 10 #3 | W6 x 12 #2 | W6 x 15 #2 | W6 x 15 #2 | W6 x 15 #2 | W6 x 16 #2S | W8 x 18 #2 | W8 x 21 #2S | W10 x 22 #2 | W10 x 26 #2 | W10 x 26 #2 | W12 x 26 #2 | W14 x 30 #2 | W18 x 35 #3 | W21 x 44 #3 | - | - | - |
| | 9 ft | - | W6 x 12 #2 | W6 x 15 #2 | W6 x 15 #2 | W6 x 15 #2 | W6 x 16 #1 | W8 x 18 #2 | W8 x 21 #2 | W10 x 22 #2 | W10 x 26 #2 | W10 x 26 #2 | W12 x 26 #2 | W14 x 30 #2 | W18 x 35 #2 | W18 x 40 #2 | W21 x 44 #3 | - | - | - |
| | 10 ft | - | W6 x 12 #2 | W6 x 15 #2 | W6 x 15 #2 | W6 x 16 #1 | W8 x 18 #2 | W8 x 21 #2 | W8 x 21 #1 | W10 x 26 #2 | W10 x 26 #2 | W12 x 26 #2 | W14 x 30 #2 | W16 x 36 #2 | W18 x 40 #2 | W21 x 44 #3 | - | - | - | - |
| | 11 ft | - | W6 x 15 #2 | W6 x 15 #1 | W6 x 15 #1 | W8 x 18 #2 | W6 x 20 #1 | W8 x 21 #1 | W10 x 26 #2 | W10 x 26 #2 | W10 x 26 #1 | W12 x 30 #2 | W14 x 34 #2 | W18 x 40 #2 | W21 x 44 #3 | - | - | - | - | - |
| | 12 ft | - | W6 x 15 #1 | W6 x 15 #1 | W8 x 18 #2 | W6 x 20 #1 | W8 x 21 #1 | W10 x 26 #2 | W10 x 26 #2 | W10 x 26 #1 | W12 x 30 #2 | W14 x 34 #2 | W16 x 36 #2 | W18 x 40 #2 | - | - | - | - | - | - |
| | 13 ft | - | W6 x 15 #1 | W6 x 16 #1 | W6 x 20 #1 | W6 x 20 #1 | W10 x 22 #2 | W10 x 26 #1 | W10 x 26 #1 | W10 x 30 #1 | W14 x 34 #2 | W16 x 36 #2 | W18 x 40 #2 | - | - | - | - | - | - | - |
| | 14 ft | - | W6 x 15 #1 | W8 x 18 #1 | W6 x 20 #1 | W8 x 21 #1 | W10 x 26 #1 | W10 x 26 #1 | W10 x 30 #1 | W12 x 30 #1 | W14 x 34 #2 | W18 x 40 #2 | - | - | - | - | - | - | - | - |
| | 15 ft | - | W8 x 18 #1 | W6 x 20 #1 | W6 x 20 #1 | W8 x 24 #1 | W10 x 26 #1 | W10 x 30 #1 | W10 x 30 #1 | W14 x 34 #2 | W16 x 36 #2 | - | - | - | - | - | - | - | - | - |
| | 16 ft | - | W8 x 18 #1 | W6 x 20 #1 | W8 x 24 #1 | W10 x 26 #1 | W10 x 26 #1 | W10 x 30 #1 | W12 x 30 #1 | W14 x 34 #1 | - | - | - | - | - | - | - | - | - | - |
| 17 ft | 7 ft | - | W6 x 9 #2 | W6 x 12 #2 | W6 x 12 #2 | W6 x 15 #2 | W6 x 15 #2 | W6 x 15 #2S | W8 x 18 #2S | W8 x 21 #2S | W10 x 22 #2 | W10 x 22 #2 | W10 x 26 #2S | W12 x 26 #2 | W14 x 30 #2 | W18 x 35 #3 | W21 x 44 #3 | - | - | - |
| | 8 ft | - | W6 x 12 #2 | W6 x 12 #2 | W6 x 15 #2 | W6 x 15 #2 | W6 x 15 #2 | W8 x 18 #2 | W8 x 21 #2S | W10 x 22 #2 | W10 x 22 #2 | W10 x 26 #2 | W12 x 26 #2 | W14 x 30 #2 | W18 x 35 #3 | W18 x 40 #3 | W21 x 44 #3 | - | - | - |
| | 9 ft | - | W6 x 12 #2 | W6 x 15 #2 | W6 x 15 #2 | W6 x 15 #2 | W8 x 18 #2 | W6 x 20 #1S | W8 x 21 #2S | W10 x 22 #2 | W10 x 26 #2 | W10 x 26 #2 | W14 x 30 #2 | W18 x 35 #3 | W18 x 40 #2 | W21 x 44 #3 | - | - | - | - |
| | 10 ft | - | W6 x 12 #2 | W6 x 15 #2 | W6 x 15 #1 | W8 x 18 #2 | W6 x 20 #1 | W8 x 21 #2 | W10 x 22 #2 | W10 x 26 #2 | W10 x 26 #2 | W12 x 30 #2 | W14 x 34 #2 | W18 x 40 #2 | W21 x 44 #3 | - | - | - | - | - |
| | 11 ft | - | W6 x 15 #2 | W6 x 15 #1 | W6 x 16 #1 | W8 x 18 #2 | W8 x 21 #2 | W10 x 22 #2 | W10 x 26 #2 | W10 x 26 #2 | W12 x 30 #2 | W14 x 30 #2 | W16 x 36 #2 | W18 x 40 #2 | W21 x 44 #3 | - | - | - | - | - |
| | 12 ft | - | W6 x 15 #1 | W6 x 15 #1 | W8 x 18 #2 | W6 x 20 #1 | W8 x 21 #1 | W10 x 26 #2 | W10 x 26 #2 | W10 x 30 #1 | W14 x 30 #2 | W16 x 36 #2 | W18 x 40 #2 | W21 x 44 #2 | - | - | - | - | - | - |
| | 13 ft | - | W6 x 15 #1 | W8 x 18 #1 | W6 x 20 #1 | W8 x 21 #1 | W10 x 26 #2 | W10 x 26 #1 | W10 x 26 #1 | W12 x 30 #2 | W14 x 34 #2 | W18 x 40 #2 | W21 x 44 #2 | - | - | - | - | - | - | - |
| | 14 ft | - | W6 x 15 #1 | W8 x 18 #1 | W6 x 20 #1 | W8 x 24 #1 | W10 x 26 #1 | W10 x 26 #1 | W12 x 30 #2 | W14 x 34 #2 | W16 x 36 #2 | W18 x 40 #2 | - | - | - | - | - | - | - | - |
| | 15 ft | - | W8 x 18 #1 | W6 x 20 #1 | W8 x 21 #1 | W10 x 26 #1 | W10 x 26 #1 | W10 x 30 #1 | W12 x 30 #1 | W16 x 36 #2 | - | - | - | - | - | - | - | - | - | - |
| | 16 ft | - | W6 x 20 #1 | W6 x 20 #1 | W8 x 24 #1 | W10 x 26 #1 | W10 x 30 #1 | W12 x 30 #1 | W14 x 34 #1 | - | - | - | - | - | - | - | - | - | - | - |
| 18 ft | 7 ft | - | W8 x 10 #3 | W6 x 12 #2 | W12 x 14 #3 | W6 x 15 #2 | W6 x 15 #2S | W6 x 15 #2S | W8 x 18 #2S | W8 x 21 #2S | W10 x 22 #2 | W10 x 26 #2 | W12 x 26 #2 | W14 x 30 #2 | W18 x 35 #3 | W18 x 35 #3 | W21 x 44 #3 | - | - | - |
| | 8 ft | - | W6 x 12 #2 | W6 x 12 #2 | W6 x 15 #2 | W6 x 15 #2 | W6 x 15 #2S | W8 x 18 #2 | W8 x 21 #2S | W10 x 22 #2 | W10 x 26 #2 | W10 x 26 #2 | W12 x 26 #2 | W18 x 35 #3 | W18 x 35 #3 | W21 x 44 #3 | - | - | - | - |
| | 9 ft | - | W6 x 12 #2 | W6 x 15 #2 | W6 x 15 #2 | W6 x 15 #2 | W8 x 18 #2 | W8 x 21 #2 | W10 x 22 #2 | W10 x 26 #2 | W10 x 26 #2 | W12 x 26 #2 | W14 x 30 #2 | W18 x 35 #3 | W21 x 44 #3 | - | - | - | - | - |
| | 10 ft | - | W6 x 15 #2 | W6 x 15 #2 | W6 x 15 #1 | W8 x 18 #2 | W8 x 21 #2 | W8 x 21 #2 | W10 x 26 #2 | W10 x 26 #2 | W12 x 26 #2 | W14 x 30 #2 | W18 x 35 #2 | W18 x 40 #2 | W21 x 44 #3 | - | - | - | - | - |
| | 11 ft | - | W6 x 15 #2 | W6 x 15 #1 | W8 x 18 #2 | W6 x 20 #1 | W8 x 21 #2 | W10 x 26 #2 | W10 x 26 #2 | W10 x 26 #2 | W12 x 30 #2 | W16 x 36 #2 | W18 x 40 #2 | W21 x 44 #3 | - | - | - | - | - | - |
| | 12 ft | - | W6 x 15 #1 | W6 x 15 #1 | W8 x 18 #2 | W8 x 21 #1 | W10 x 22 #2 | W10 x 26 #2 | W10 x 26 #1 | W12 x 30 #2 | W14 x 34 #2 | W18 x 40 #2 | W21 x 44 #3 | - | - | - | - | - | - | - |
| | 13 ft | - | W6 x 15 #1 | W8 x 18 #1 | W6 x 20 #1 | W8 x 21 #1 | W10 x 26 #2 | W10 x 26 #1 | W10 x 30 #1 | W14 x 34 #2 | W16 x 36 #2 | W18 x 40 #2 | - | - | - | - | - | - | - | - |
| | 14 ft | - | W6 x 16 #1 | W6 x 20 #1 | W6 x 20 #1 | W10 x 26 #1 | W10 x 26 #1 | W10 x 30 #1 | W12 x 30 #2 | W16 x 36 #2 | W18 x 40 #2 | - | - | - | - | - | - | - | - | - |
| | 15 ft | - | W8 x 18 #1 | W6 x 20 #1 | W8 x 24 #1 | W10 x 26 #1 | W10 x 26 #1 | W12 x 30 #1 | W14 x 34 #2 | W16 x 36 #2 | - | - | - | - | - | - | - | - | - | - |
| | 16 ft | - | W6 x 20 #1 | W6 x 20 #1 | W10 x 26 #1 | W10 x 26 #1 | W10 x 30 #1 | W12 x 30 #1 | W16 x 36 #2 | - | - | - | - | - | - | - | - | - | - | - |
| 19 ft | 7 ft | - | - | W6 x 12 #2 | W12 x 14 #3 | W6 x 15 #2 | W6 x 15 #2S | W8 x 18 #2 | W8 x 18 #2S | W10 x 22 #2 | W10 x 22 #2 | W10 x 26 #2 | W12 x 26 #2 | W14 x 30 #2 | W18 x 35 #3 | W21 x 44 #3 | - | - | - | - |
| | 8 ft | - | - | W12 x 14 #3 | W6 x 15 #2 | W6 x 15 #2 | W6 x 16 #2S | W8 x 18 #2 | W10 x 22 #2 | W10 x 22 #2 | W10 x 26 #2 | W12 x 26 #2 | W14 x 30 #2 | W18 x 35 #3 | W21 x 44 #3 | W21 x 44 #3 | - | - | - | - |
| | 9 ft | - | - | W6 x 15 #2 | W6 x 15 #2 | W6 x 16 #2 | W8 x 18 #2 | W8 x 21 #2 | W10 x 22 #2 | W10 x 26 #2 | W12 x 26 #2 | W14 x 30 #2 | W18 x 35 #3 | W18 x 35 #3 | W21 x 44 #3 | - | - | - | - | - |
| | 10 ft | - | - | W6 x 15 #2 | W6 x 15 #1 | W8 x 18 #2 | W8 x 21 #2 | W10 x 22 #2 | W10 x 26 #2 | W10 x 26 #2 | W12 x 26 #2 | W18 x 35 #3 | W18 x 40 #3 | W21 x 44 #3 | - | - | - | - | - | - |
| | 11 ft | - | - | W6 x 15 #1 | W8 x 18 #2 | W6 x 20 #1 | W8 x 21 #1 | W10 x 26 #2 | W10 x 26 #2 | W12 x 26 #2 | W14 x 30 #2 | W16 x 36 #2 | W21 x 44 #3 | - | - | - | - | - | - | - |
| | 12 ft | - | - | W8 x 18 #2 | W6 x 20 #1 | W8 x 21 #1 | W10 x 26 #2 | W10 x 26 #2 | W10 x 26 #1 | W14 x 30 #2 | W16 x 36 #2 | W18 x 40 #2 | W21 x 44 #3 | - | - | - | - | - | - | - |
| | 13 ft | - | - | W8 x 18 #1 | W6 x 20 #1 | W10 x 22 #2 | W10 x 26 #2 | W10 x 26 #1 | W12 x 30 #2 | W16 x 36 #2 | W18 x 40 #2 | W21 x 44 #2 | - | - | - | - | - | - | - | - |
| | 14 ft | - | - | W6 x 20 #1 | W8 x 21 #1 | W10 x 26 #1 | W10 x 26 #1 | W12 x 30 #2 | W14 x 34 #2 | W16 x 36 #2 | - | - | - | - | - | - | - | - | - | - |
| | 15 ft | - | - | W6 x 20 #1 | W8 x 24 #1 | W10 x 26 #1 | W10 x 30 #1 | W12 x 30 #1 | W16 x 36 #2 | - | - | - | - | - | - | - | - | - | - | - |
| | 16 ft | - | - | W6 x 20 #1 | W10 x 26 #1 | W10 x 26 #1 | W10 x 30 #1 | W14 x 34 #2 | - | - | - | - | - | - | - | - | - | - | - | - |
| 20 ft | 7 ft | - | - | W6 x 12 #2 | W6 x 15 #2 | W6 x 15 #2 | W6 x 15 #2S | W8 x 18 #2S | W8 x 21 #2S | W10 x 22 #2 | W10 x 22 #2 | W12 x 26 #2 | W14 x 30 #3 | W16 x 31 #3 | W18 x 35 #3 | W21 x 44 #3 | - | - | - | - |
| | 8 ft | - | - | W6 x 15 #2 | W6 x 15 #2 | W6 x 15 #2 | W8 x 18 #2 | W8 x 21 #2S | W10 x 22 #2 | W10 x 22 #2 | W10 x 26 #2 | W12 x 26 #2 | W18 x 35 #3 | W18 x 35 #3 | W21 x 44 #3 | - | - | - | - | - |
| | 9 ft | - | - | W6 x 15 #2 | W6 x 15 #2 | W8 x 18 #2 | W8 x 21 #2 | W10 x 22 #2 | W10 x 22 #2 | W10 x 26 #2 | W12 x 26 #2 | W14 x 34 #2 | W18 x 35 #3 | W21 x 44 #3 | - | - | - | - | - | - |
| | 10 ft | - | - | W6 x 15 #2 | W6 x 16 #1 | W8 x 18 #2 | W8 x 21 #2 | W10 x 22 #2 | W10 x 26 #2 | W12 x 26 #2 | W14 x 30 #2 | W18 x 35 #3 | W21 x 44 #3 | W21 x 44 #3 | - | - | - | - | - | - |
| | 11 ft | - | - | W6 x 15 #1 | W8 x 18 #2 | W8 x 21 #2 | W10 x 22 #2 | W10 x 26 #2 | W10 x 26 #2 | W12 x 30 #2 | W18 x 35 #2 | W18 x 40 #2 | W21 x 44 #3 | - | - | - | - | - | - | - |
| | 12 ft | - | - | W8 x 18 #2 | W6 x 20 #1 | W8 x 21 #1 | W10 x 26 #2 | W10 x 26 #2 | W12 x 30 #2 | W14 x 30 #2 | W18 x 40 #2 | W21 x 44 #3 | - | - | - | - | - | - | - | - |
| | 13 ft | - | - | W6 x 20 #1 | W8 x 21 #1 | W10 x 26 #2 | W10 x 26 #2 | W10 x 30 #1 | W14 x 30 #2 | W16 x 36 #2 | W18 x 40 #2 | W21 x 44 #2 | - | - | - | - | - | - | - | - |
| | 14 ft | - | - | W6 x 20 #1 | W8 x 21 #1 | W10 x 26 #1 | W10 x 26 #1 | W12 x 30 #2 | W16 x 36 #2 | W18 x 40 #2 | - | - | - | - | - | - | - | - | - | - |
| | 15 ft | - | - | W6 x 20 #1 | W10 x 26 #1 | W10 x 26 #1 | W10 x 30 #1 | W14 x 34 #2 | W16 x 36 #2 | - | - | - | - | - | - | - | - | - | - | - |
| | 16 ft | - | - | W8 x 24 #1 | W10 x 26 #1 | W10 x 30 #1 | W12 x 30 #1 | W16 x 36 #2 | - | - | - | - | - | - | - | - | - | - | - | - |
| 21 ft | 7 ft | - | - | W6 x 12 #2 | W6 x 15 #2 | W6 x 15 #2 | W6 x 16 #2S | W8 x 18 #2S | W10 x 22 #2 | W10 x 22 #2 | W10 x 26 #2 | W12 x 26 #2 | W16 x 31 #3 | W18 x 35 #3 | W21 x 44 #3 | - | - | - | - | - |
| | 8 ft | - | - | W6 x 15 #2 | W6 x 15 #2 | W6 x 15 #2 | W8 x 18 #2 | W8 x 21 #2S | W10 x 22 #2 | W10 x 26 #2 | W12 x 26 #2 | W14 x 30 #2 | W18 x 35 #3 | W21 x 44 #3 | - | - | - | - | - | - |
| | 9 ft | - | - | W6 x 15 #2 | W6 x 15 #2 | W8 x 18 #2 | W8 x 21 #2 | W10 x 22 #2 | W10 x 22 #2 | W12 x 26 #2 | W14 x 30 #2 | W18 x 35 #3 | W18 x 35 #3 | W21 x 44 #3 | - | - | - | - | - | - |
| | 10 ft | - | - | W6 x 15 #2 | W8 x 18 #2 | W6 x 20 #1 | W10 x 22 #2 | W10 x 26 #2 | W10 x 26 #2 | W12 x 26 #2 | W18 x 35 #3 | W18 x 35 #3 | W21 x 44 #3 | - | - | - | - | - | - | - |
| | 11 ft | - | - | W6 x 15 #1 | W8 x 18 #2 | W8 x 21 #1 | W10 x 22 #2 | W10 x 26 #2 | W12 x 26 #2 | W14 x 30 #2 | W16 x 40 #2 | W21 x 44 #3 | - | - | - | - | - | - | - | - |
| | 12 ft | - | - | W8 x 18 #2 | W6 x 20 #1 | W10 x 22 #2 | W10 x 26 #2 | W10 x 26 #2 | W14 x 30 #2 | W16 x 36 #2 | W18 x 40 #2 | W21 x 44 #3 | - | - | - | - | - | - | - | - |
| | 13 ft | - | - | W6 x 20 #1 | W8 x 21 #1 | W10 x 26 #2 | W10 x 26 #2 | W12 x 30 #2 | W14 x 34 #2 | W18 x 40 #2 | W21 x 44 #3 | - | - | - | - | - | - | - | - | - |
| | 14 ft | - | - | W6 x 20 #1 | W10 x 26 #2 | W10 x 26 #1 | W10 x 30 #1 | W14 x 34 #2 | W16 x 36 #2 | - | - | - | - | - | - | - | - | - | - | - |
| | 15 ft | - | - | W8 x 21 #1 | W10 x 26 #1 | W10 x 26 #1 | W12 x 30 #2 | W16 x 36 #2 | - | - | - | - | - | - | - | - | - | - | - | - |
| | 16 ft | - | - | W8 x 24 #1 | W10 x 26 #1 | W10 x 30 #1 | W14 x 34 #2 | W16 x 36 #2 | - | - | - | - | - | - | - | - | - | - | - | - |
| 22 ft | 7 ft | - | - | W6 x 12 #2 | W6 x 15 #2 | W6 x 15 #2 | W8 x 18 #2 | W8 x 18 #2S | W10 x 22 #2 | W10 x 22 #2 | W12 x 26 #3 | W16 x 26 #3 | W16 x 31 #3 | W18 x 35 #3 | W21 x 44 #3 | - | - | - | - | - |
| | 8 ft | - | - | W6 x 15 #2 | W6 x 15 #2 | W6 x 15 #2 | W8 x 18 #2 | W10 x 22 #2 | W10 x 22 #2 | W10 x 26 #2 | W12 x 26 #2 | W16 x 31 #3 | W18 x 35 #3 | W21 x 44 #3 | - | - | - | - | - | - |
| | 9 ft | - | - | W6 x 15 #2 | W6 x 15 #2 | W8 x 18 #2 | W8 x 21 #2 | W10 x 22 #2 | W10 x 26 #2 | W12 x 26 #2 | W14 x 30 #2 | W18 x 35 #3 | W21 x 44 #3 | - | - | - | - | - | - | - |
| | 10 ft | - | - | W6 x 15 #2 | W8 x 18 #2 | W8 x 21 #2 | W10 x 22 #2 | W10 x 26 #2 | W12 x 26 #2 | W14 x 30 #2 | W18 x 35 #3 | W21 x 44 #3 | - | - | - | - | - | - | - | - |
| | 11 ft | - | - | W6 x 16 #1 | W6 x 20 #1 | W8 x 21 #2 | W10 x 26 #2 | W10 x 26 #2 | W12 x 26 #2 | W18 x 35 #3 | W18 x 40 #3 | W21 x 44 #3 | - | - | - | - | - | - | - | - |
| | 12 ft | - | - | W8 x 18 #2 | W8 x 21 #2 | W10 x 22 #2 | W10 x 26 #2 | W12 x 26 #2 | W14 x 30 #2 | W18 x 40 #2 | W21 x 44 #3 | - | - | - | - | - | - | - | - | - |
| | 13 ft | - | - | W6 x 20 #1 | W8 x 21 #1 | W10 x 26 #2 | W10 x 26 #1 | W12 x 30 #2 | W16 x 36 #2 | W18 x 40 #2 | - | - | - | - | - | - | - | - | - | - |
| | 14 ft | - | - | W6 x 20 #1 | W10 x 26 #2 | W10 x 26 #1 | W12 x 30 #2 | W14 x 34 #2 | W18 x 40 #2 | - | - | - | - | - | - | - | - | - | - | - |
| | 15 ft | - | - | W10 x 22 #1 | W10 x 26 #1 | W10 x 30 #1 | W12 x 30 #2 | W16 x 36 #2 | - | - | - | - | - | - | - | - | - | - | - | - |
| | 16 ft | - | - | W10 x 26 #1 | W10 x 26 #1 | W10 x 30 #1 | W14 x 34 #2 | - | - | - | - | - | - | - | - | - | - | - | - | - |

| REV. | DATE | REVISION DESCRIPTION | SHEET NO. |
|---|---|---|---|
| - | - | - | - |
| - | - | - | - |
| - | - | - | - |
| - | - | - | - |
| - | - | - | - |
| - | - | - | - |

THE INFORMATION, INCLUDING ESTIMATED QUANTITIES OF WORK, SHOWN ON THESE SHEETS IS BASED ON LIMITED INVESTIGATIONS BY THE STATE AND IS IN NO WAY WARRANTED TO INDICATE THE CONDITIONS OF ACTUAL QUANTITIES OF WORK WHICH WILL BE REQUIRED.

Plotted Date: 6/2/2016

DESIGNER/DRAFTER: **BKC**

CHECKED BY: **JRH**

SCALE AS NOTED

**STATE OF CONNECTICUT**
**DEPARTMENT OF TRANSPORTATION**

Filename: ...\SB_Breakaway_Signpost_BSM3_PostSelectionTable_2.dgn

SIGNATURE/ BLOCK: **OFFICE OF ENGINEERING**

APPROVED BY: DATE:

Mary E Bak

PROJECT TITLE: **MERRITT PARKWAY (ROUTE 15) SAFETY IMPROVEMENTS, RESURFACING, ENHANCEMENTS AND BRIDGE IMPROVEMENTS**

TOWN: **WESTPORT/FAIRFIELD**

DRAWING TITLE: **BREAKAWAY SIGN SUPPORTS POST SELECTION TABLE 2**

PROJECT NO. **158-211**

DRAWING NO. **BSM-3**

SHEET NO. 02.03.04

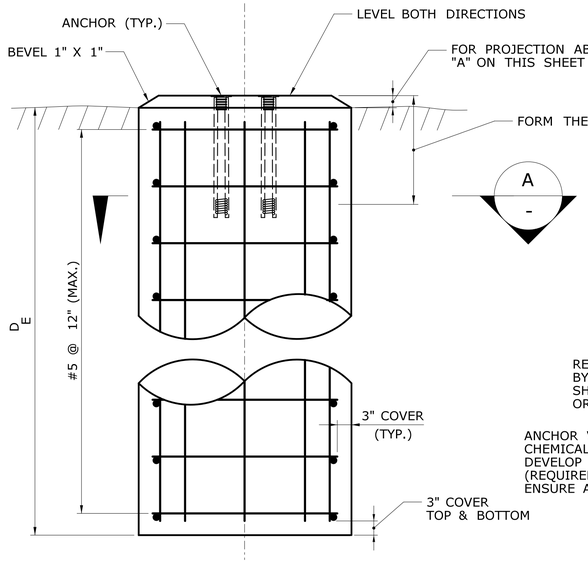


TYPICAL SECTION
SIGN SUPPORT FOUNDATION IN EARTH
SCALE: $\frac{3}{4}$" = 1'-0"

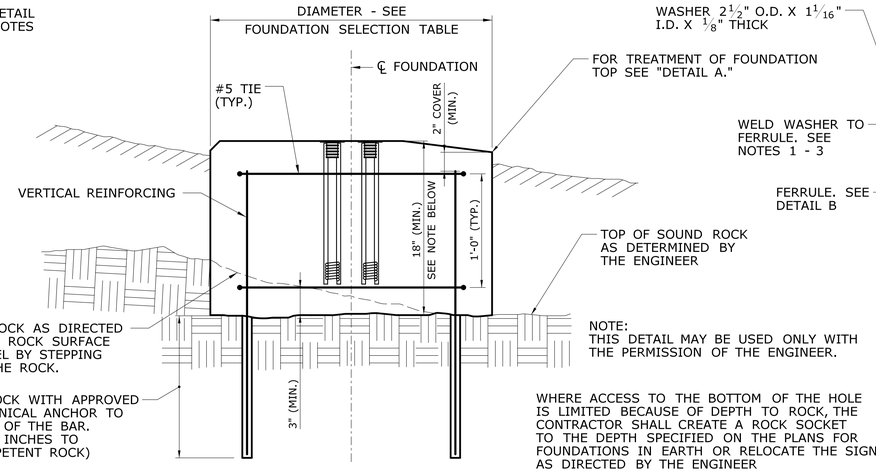


NOTE:
THIS DETAIL MAY BE USED ONLY WITH THE PERMISSION OF THE ENGINEER.

WHERE ACCESS TO THE BOTTOM OF THE HOLE IS LIMITED BECAUSE OF DEPTH TO ROCK, THE CONTRACTOR SHALL CREATE A ROCK SOCKET TO THE DEPTH SPECIFIED ON THE PLANS FOR FOUNDATIONS IN EARTH OR RELOCATE THE SIGN AS DIRECTED BY THE ENGINEER

TYPICAL SECTION SIGN
SUPPORT FOUNDATION IN ROCK
SCALE: $1\frac{1}{2}$" = 1'-0"

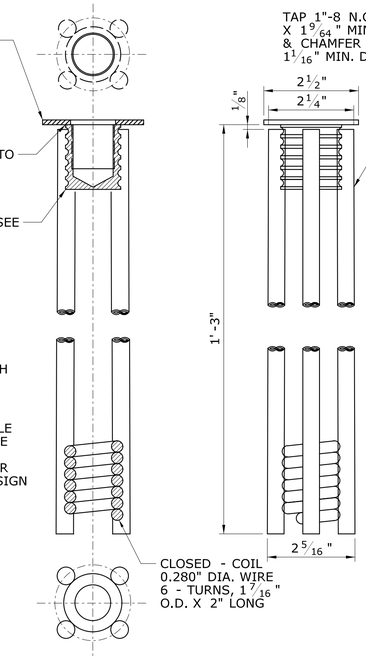





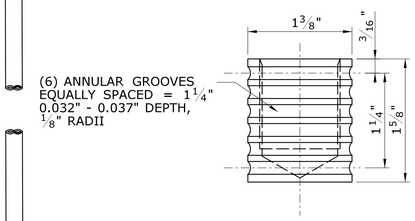


DETAIL B

ANCHOR NOTES:

1. FILLET WELD WASHER TO FERRULE AT 4 PLACES 90° APART. WELD MUST NOT PENETRATE THROUGH THE WASHER. WASHER MUST BE PERPENDICULAR TO THE FERRULE CENTER LINE.
2. WIRES (4) TO BE PERCUSSION WELDED TO FERRULE AND TO THE CLOSED COIL.
3. WELD MUST NOT PENETRATE TO FERRULE INTERIOR THREADS.
4. WIRE TO BE DRAWN PER ASTM A510.
5. CHEMICAL & PHYSICAL CERTIFICATION SHOULD ACCOMPANY THE MATERIAL.
6. CERTIFICATION SHOULD EXPLICITLY INDICATE THE MATERIAL TO BE DOMESTIC.
7. TOLERANCES ON DECIMAL DIMENSIONS SHALL BE ± 0.004". ALL OTHER TOLERANCES SHALL BE ± 0.04", EXCEPT AS NOTED.

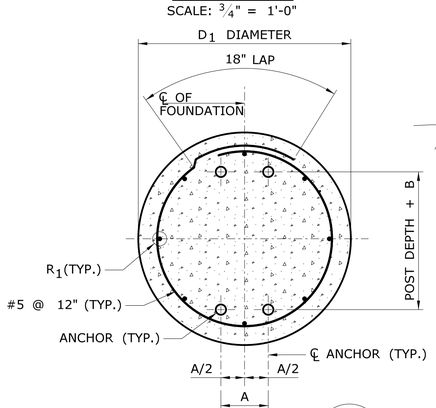


SECTION
DRILLED FOUNDATION
A
-

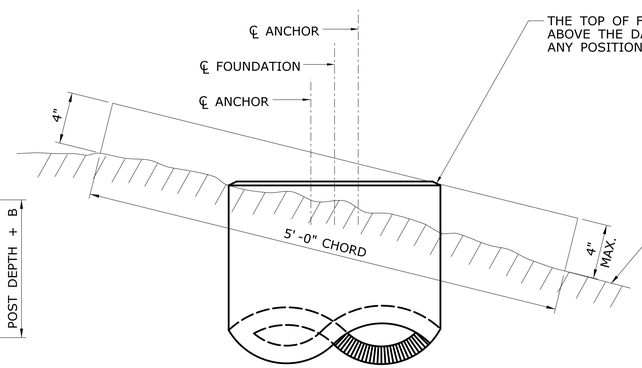


STANDARD FOUNDATION TOP

THE TOP OF FOUNDATION SHALL NOT PROJECT ABOVE THE DASHED LINE WHEN THE LINE IS IN ANY POSITION STRADDLING THE FOUNDATION

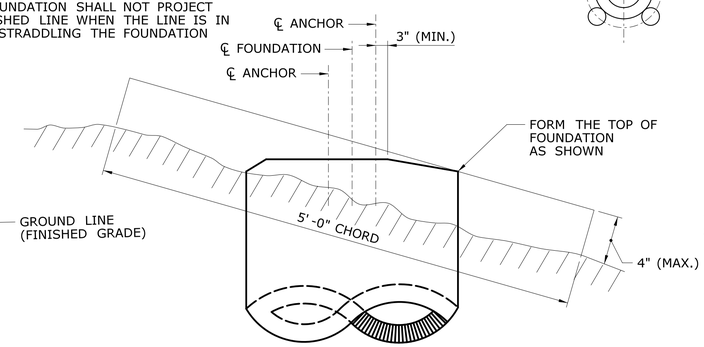


MODIFIED FOUNDATION TOP
(SEE FOUNDATION NOTE 3)

DETAIL A - PROJECTION OF
FOUNDATION ABOVE GROUND

ERECTION NOTE:

FOR MAXIMUM EFFECTIVENESS AND TO ELIMINATE OR MINIMIZE SPECULAR GLARE, POSITION SIDE MOUNTED SIGNS AS FOLLOWS:

A. ON TANGENT SECTION, POSITION THE SIGN SUCH THAT THE VERTICAL AXIS IS PLUMB AND THE HORIZONTAL AXIS IS AT AN ANGLE OF 93° WITH THE TRAFFIC LANE WHICH THE SIGN SERVES (SEE DIAGRAM).

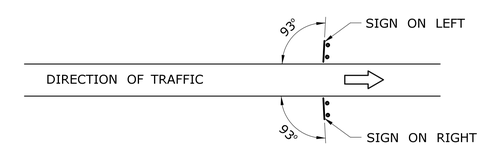


B. WHERE THE SIGN IS POSITIONED ON THE OUTSIDE OR INSIDE OF THE HORIZONTAL CURVE, THE SIGN FACE SHOULD BE ORIENTED 90° TO THE STRAIGHT LINE BETWEEN THE SIGN AND THE POINT FROM WHICH THE SIGN IS TO BE READ AT THE DISTANCE SHOWN.

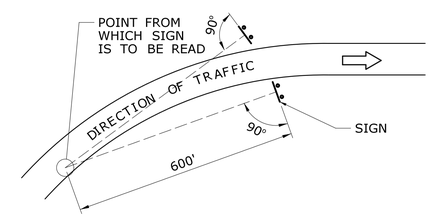


SIGN SUPPORT PLACEMENT DETAILS

FOUNDATION NOTES

1. DETAIL A ILLUSTRATES THE METHOD USED TO MEASURE THE PROJECTION OF THE FOUNDATION ABOVE FINISHED GRADE. IT IS IMPORTANT THAT THE TOP OF THE FOUNDATION BE PLACED IN ACCORDANCE WITH THIS DETAIL.
2. THE TOP OF FOUNDATION SHALL BE CONSTRUCTED AS CLOSE TO THE FINISHED GRADE AS POSSIBLE, BUT SHOULD NOT BE COVERED BY SOIL.
3. USE A MODIFIED TOP WHERE PROJECTION LIMITS CANNOT BE MET WITH THE STANDARD TOP.
4. FOUNDATIONS SHALL BE PLACED AGAINST UNDISTURBED SOIL. WHERE ROCK IS ENCOUNTERED, THE CONTRACTOR MAY USE THE "SIGN SUPPORT FOUNDATION IN ROCK" DETAIL SHOWN ON THIS SHEET WITH THE PERMISSION OF THE ENGINEER.
5. IF UNSUITABLE SOIL IS ENCOUNTERED DURING EXCAVATION, THE ENGINEER SHALL BE NOTIFIED. AN ALTERNATE FOUNDATION DESIGN MAY BE SUPPLIED BY THE ENGINEER, OR THE SIGN MAY BE RELOCATED.
6. PLACEMENT OF FOUNDATIONS SHALL BE IN ACCORDANCE WITH "SIGN SUPPORT PLACEMENT DETAILS" ON THIS SHEET.
7. WHERE FOUNDATIONS ARE PLACED ON SLOPES STEEPER THAN 1V : 6H, GRADE AROUND THE FOUNDATIONS IN CONFORMANCE WITH DETAIL A.

SELECTING A FOUNDATION:

ENTER THE "FOUNDATION SELECTION TABLE" WITH THE POST SIZE AND BRACKET NO. SELECTED FROM THE "POST SELECTION TABLE 1 OR 2" ON DWG BSM-2 OR DWG BSM-3. READ HORIZONTALLY ACROSS THE TABLE THE CORRESPONDING VALUES OF FOUNDATION DIAMETER, EMBEDMENT DEPTH, REINFORCING BAR SIZE, ANCHOR SPACING AND DIMENSION "B".

FOUNDATION SELECTION TABLE FOR BREAKAWAY SIGNS

| POST SIZE | DIAMETER $D_I$ (FT.) | DEPTH $D_E$ (FT.) | REINF. STEEL $R_I$ | ANCHOR SPACING A (IN.) | B (IN.) BRACKET NO. 1 | 2 | 3 |
|---|---|---|---|---|---|---|---|
| W6 W8 | 2.5 | 8 | 8 - #5 | 3 | $7\frac{15}{16}$ | $8\frac{1}{16}$ | $8\frac{1}{8}$ |
| W10 W12 | 2.5 | 8 | 8 - #5 | 4 | $7\frac{15}{16}$ | $8\frac{1}{16}$ | $8\frac{1}{8}$ |
| W14 W16 W18 W21 | 3.25 | 8 | 8 - #6 | 4 | $7\frac{15}{16}$ | $8\frac{1}{16}$ | $8\frac{1}{8}$ |

| REV. | DATE | REVISION DESCRIPTION | SHEET NO. |
|---|---|---|---|
| - | - | - | - |
| - | - | - | - |
| - | - | - | - |
| - | - | - | - |
| - | - | - | - |
| - | - | - | - |

THE INFORMATION, INCLUDING ESTIMATED QUANTITIES OF WORK, SHOWN ON THESE SHEETS IS BASED ON LIMITED INVESTIGATIONS BY THE STATE AND IS IN NO WAY WARRANTED TO INDICATE THE CONDITIONS OF ACTUAL QUANTITIES OF WORK WHICH WILL BE REQUIRED.

Plotted Date: 6/2/2016

DESIGNER/DRAFTER: BKC
CHECKED BY: JRH
SCALE AS NOTED

STATE OF CONNECTICUT
DEPARTMENT OF TRANSPORTATION

Filename: ...\SB_Breakaway_Signpost_BSM4_FoundationDet.dgn

SIGNATURE/BLOCK: OFFICE OF ENGINEERING
APPROVED BY: DATE:

PROJECT TITLE: MERRITT PARKWAY (ROUTE 15) SAFETY IMPROVEMENTS, RESURFACING, ENHANCEMENTS AND BRIDGE IMPROVEMENTS

TOWN: WESTPORT/FAIRFIELD

DRAWING TITLE: BREAKAWAY SIGN SUPPORTS FOUNDATION DETAILS

PROJECT NO. 158-211
DRAWING NO. BSM-4
SHEET NO. 02.03.05

## TABLE 1 - BRACKET DATA

| POST SIZE | BRACKET TYPE | BRACKET WEIGHT (LBS) | DIMENSIONS (IN.) | | | HOLE DIAMETERS (IN.) | | | DIMENSIONS (IN.) | | | | |
|---|---|---|---|---|---|---|---|---|---|---|---|---|---|
| | | | | | | | | | E BRACKET NO. | | | F | G |
| | | | A | B | C | D1 | D2 | D3 | 1 | 2 | 3 | | |
| W6, W8 | B525 | $7\frac{5}{8}$ | $5\frac{1}{4}$ | $1\frac{1}{8}$ | $1\frac{1}{2}$ | $\frac{17}{32}$ | $\frac{7}{16}$ | $\frac{1}{2}$" -13 UNC 1A | 0.100 | 0.150 | 0.200 | $1\frac{7}{8}$ | $\frac{1}{2}$ |
| ALL OTHERS | B650 | $9\frac{1}{2}$ | $6\frac{1}{2}$ | $1\frac{1}{8}$ | 2 | $\frac{21}{32}$ | $\frac{17}{32}$ | $\frac{5}{8}$"-11 UNC 1A | 0.100 | 0.150 | 0.200 | $2\frac{7}{8}$ | $\frac{1}{2}$ |

## TABLE 2 - BRACKET BOLTS

| POST SIZE | BRACKET TYPE | BOLT AND CAP SCREW DIAMETER | BOLT LENTGH | | | CAP SCREW LENGTH | THREAD DESIGNATION (U.S. CUSTOMARY UNITS) | |
|---|---|---|---|---|---|---|---|---|
| | | | TOP | MIDDLE | BOTTOM | | BOLT | CAP SCREW |
| W6, W8 | B525 | $\frac{1}{2}$ | $2\frac{1}{2}$ | $2\frac{3}{4}$ | 3 | $1\frac{1}{4}$ | 13 UNC | 13 UNC |
| ALL OTHERS | B650 | $\frac{5}{8}$ | $2\frac{3}{4}$ | 3 | $3\frac{1}{4}$ | $1\frac{1}{4}$ | 11 UNC | 11 UNC |

SHIM AS REQUIRED WITH MANUFACTURER SUPPLIED SHIMS (4 LOCATIONS). NO MORE THAN TWO SHIMS UNDERNEATH ANY ONE COUPLING AND NO MORE THAN THREE SHIMS UNDERNEATH ANY TWO COUPLINGS.

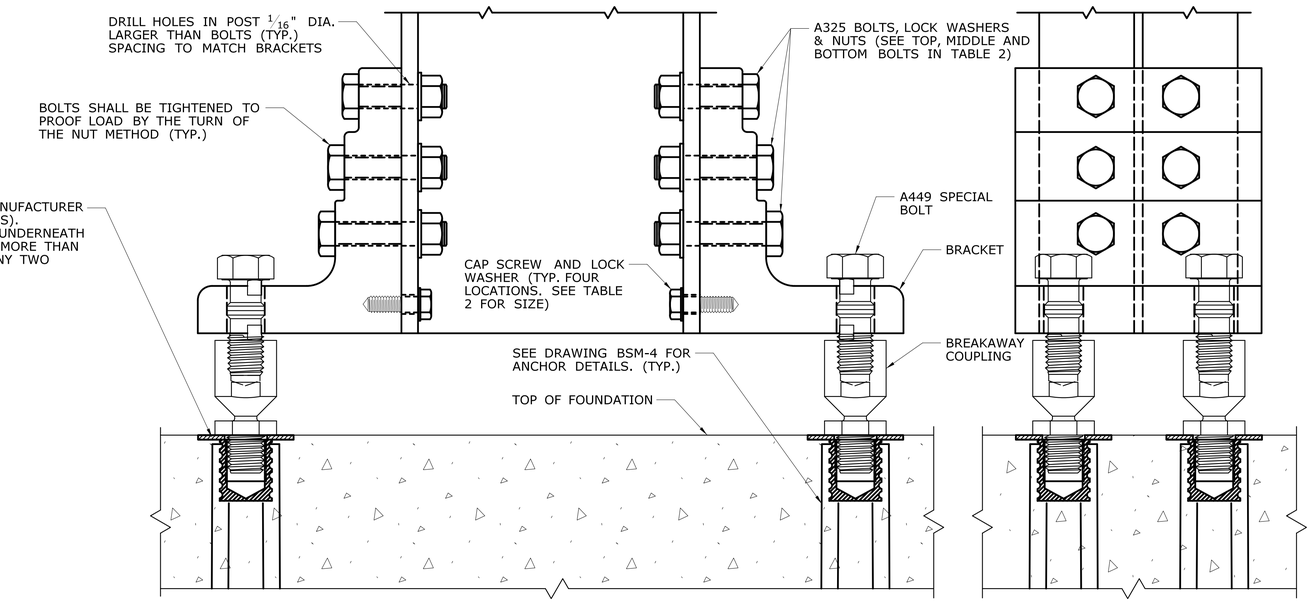


SIDE ELEVATION

FRONT ELEVATION

BRACKET ASSEMBLY DETAILS

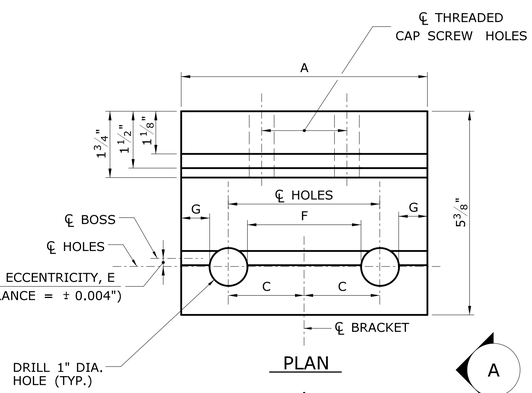


PLAN

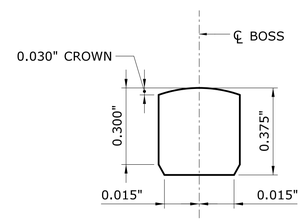


BOSS DETAIL

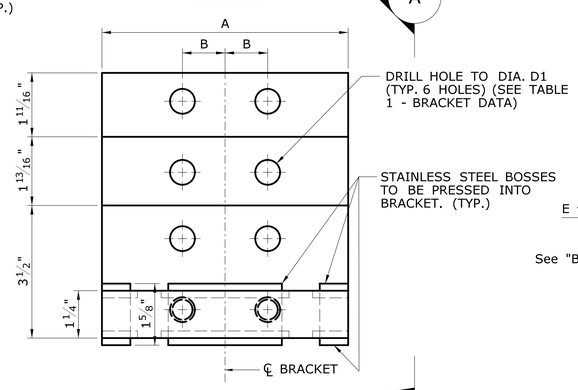


ELEVATION

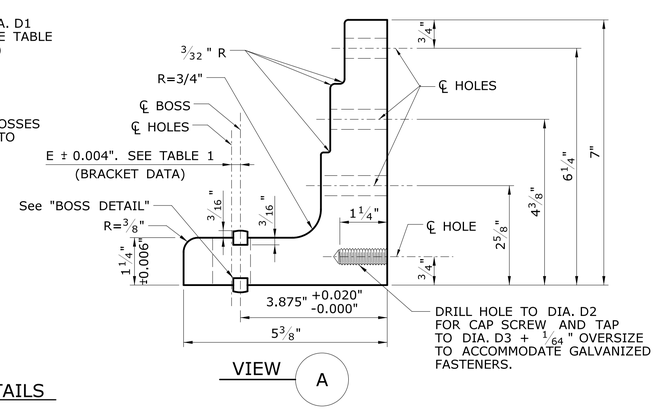


VIEW A

BRACKET DETAILS

HALF SCALE

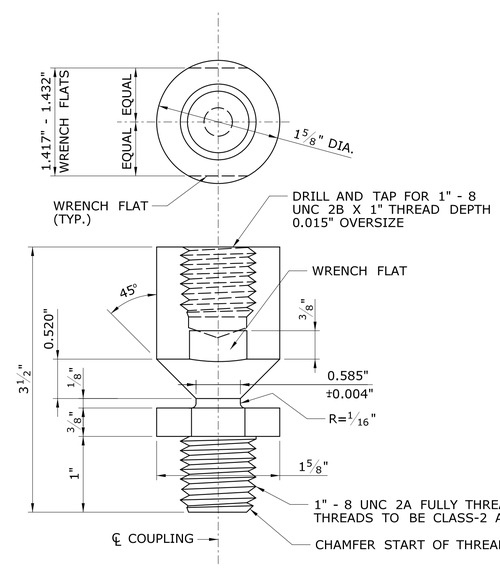


NOTE:
TOLERANCES TO $\frac{1}{32}$" EXCEPT AS NOTED

BREAKAWAY COUPLING

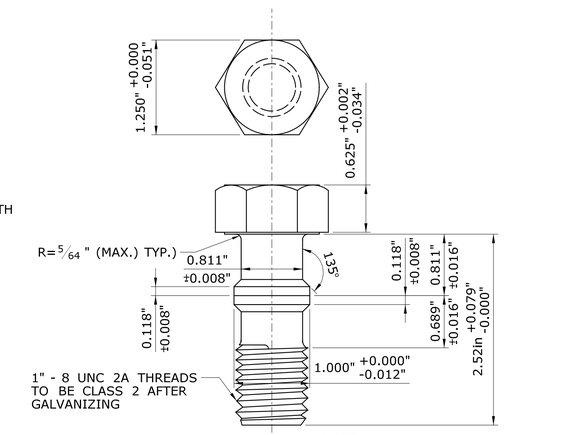


NOTE:
CHEMICAL & PHYSICAL PROPERTIES OF "SPECIAL BOLT" SHALL CONFORM TO ASTM A449.

SPECIAL BOLT

| REV. | DATE | REVISION DESCRIPTION | SHEET NO. |
|---|---|---|---|
| - | - | - | - |
| - | - | - | - |
| - | - | - | - |
| - | - | - | - |
| - | - | - | - |
| - | - | - | - |

THE INFORMATION, INCLUDING ESTIMATED QUANTITIES OF WORK, SHOWN ON THESE SHEETS IS BASED ON LIMITED INVESTIGATIONS BY THE STATE AND IS IN NO WAY WARRANTED TO INDICATE THE CONDITIONS OF ACTUAL QUANTITIES OF WORK WHICH WILL BE REQUIRED.

Plotted Date: 6/2/2016

DESIGNER/DRAFTER: **BKC**

CHECKED BY: **JRH**

SCALE AS NOTED

**STATE OF CONNECTICUT**
**DEPARTMENT OF TRANSPORTATION**

Filename: ...\SB_Breakaway_Signpost_BSM5_BracketDet.dgn

SIGNATURE/BLOCK: **OFFICE OF ENGINEERING**

APPROVED BY: DATE:

PROJECT TITLE: **MERRITT PARKWAY (ROUTE 15) SAFETY IMPROVEMENTS, RESURFACING, ENHANCEMENTS AND BRIDGE IMPROVEMENTS**

TOWN: **WESTPORT/FAIRFIELD**

DRAWING TITLE: **BREAKAWAY SIGN SUPPORTS BRACKET DETAILS**

PROJECT NO. **158-211**

DRAWING NO. **BSM-5**

SHEET NO. 02.03.06

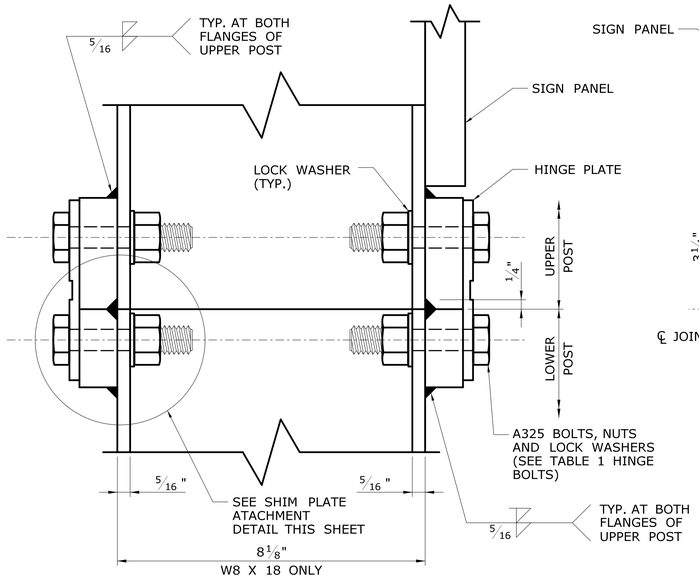


SIDE ELEVATION

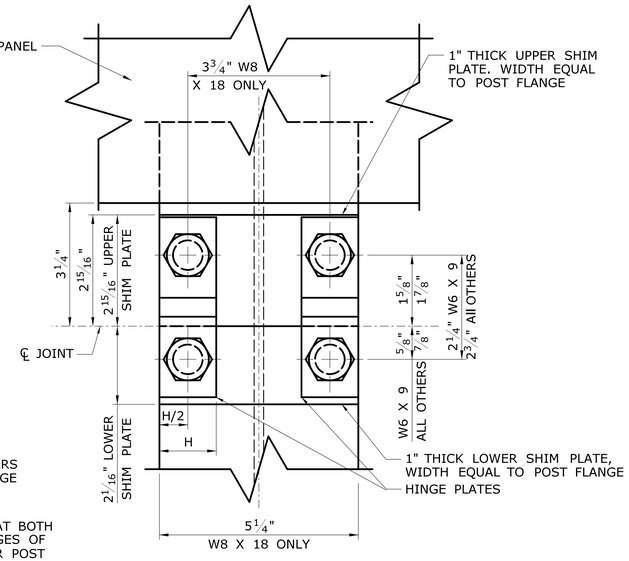


FRONT ELEVATION

WITH SHIM PLATE

SCALE: 1/2 (W8 X 18)

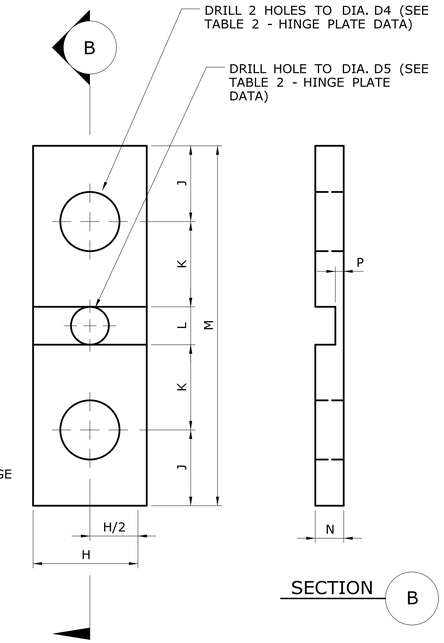


SECTION

HINGE PLATE DETAILS

SCALE: FULL

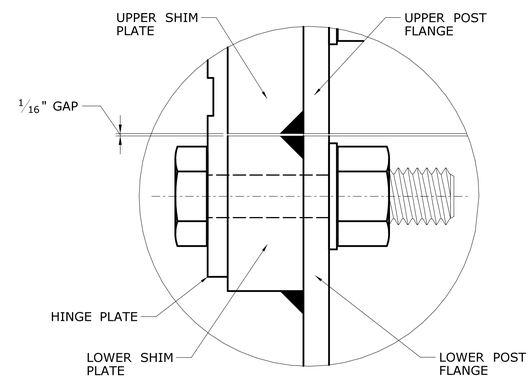


SHIM PLATE ATTACHMENT DETAILS

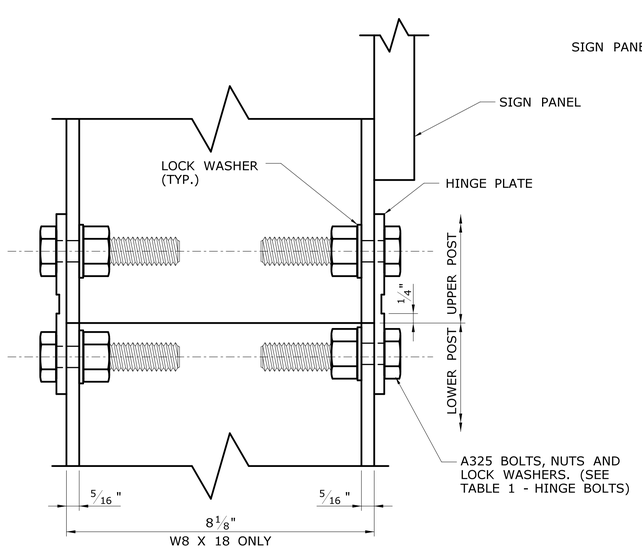


SIDE ELEVATION

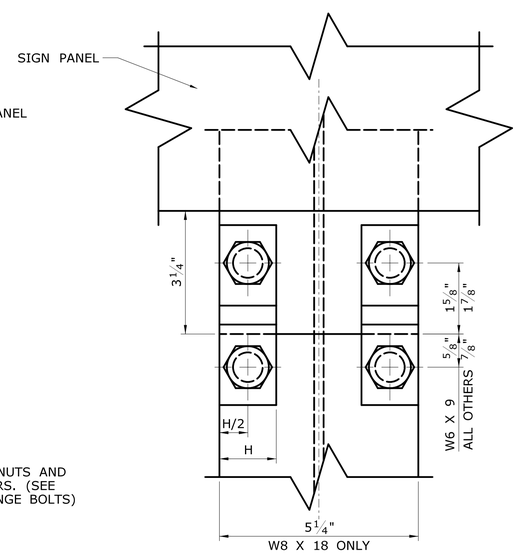


FRONT ELEVATION

WITHOUT SHIM PLATE

SCALE: 1/2 (W8 X 18)

TABLE 2 - HINGE PLATE DATA

| POST SIZE | PLATE NO. | DIMENSIONS (IN.) | | | | | | | HOLE DIA. (IN.) | |
|---|---|---|---|---|---|---|---|---|---|---|
| | | H | J | K | L | M | N | P | D4 | D5 |
| W6 X 9 | 1 | 1 | 3/4 | 7/8 | 1/2 | 3 3/4 | 15/64 | 0.071 ± 0.004 | 17/32 | NONE |
| W6* AND W8 | 2 | 1 1/2 | 1 | 1 1/8 | 1/2 | 4 3/4 | 3/8 | 0.113 ± 0.004 | 25/32 | 1/2 |
| ALL OTHERS | 3 | 1 1/2 | 1 | 1 1/8 | 1/2 | 4 3/4 | 3/8 | 0.113 ± 0.004 | 25/32 | NONE |

* EXCLUDING W6 X 9

## GENERAL NOTES

SPECIFICATIONS: CONNECTICUT DEPARTMENT OF TRANSPORTATION FORM 816 (2004), SUPPLEMENTAL SPECIFICATION DATED JULY 2015, AND SPECIAL PROVISIONS.
DESIGN SPECIFICATIONS: AASHTO STANDARD SPECIFICATIONS FOR HIGHWAY BRIDGES 17TH EDITION DATED 2002, AND AASHTO STANDARD SPECIFICATIONS FOR STRUCTURAL SUPPORTS FOR HIGHWAY SIGNS, LUMINAIRES AND TRAFFIC SIGNALS (2009) WITH THE 2011 INTERIM SPECIFICATIONS.
DESIGN LOADS: THE DESIGN WIND SPEED IS 100 MPH, BASED ON A 10-YEAR MEAN RECURRENCE INTERVAL.
MATERIALS:

FOUNDATIONS: CONCRETE FOR FOUNDATIONS SHALL BE CLASS "A" CONCRETE.

REINFORCEMENT: REINFORCING STEEL SHALL CONFORM TO THE REQUIREMENTS OF ASTM A615, GRADE 60.
SIGN POSTS: STEEL FOR SIGN POSTS SHALL CONFORM TO THE REQUIREMENTS OF ASTM A709, GRADE 36, AND SHALL BE HOT DIP GALVANIZED AFTER FABRICATION IN ACCORDANCE WITH ASTM A123. THE POST SHALL BE PERMANENTLY LABELED WITH THE POST SIZE ON THE WEB AT THE BOTTOM OF THE LOWER POST.
ANCHORS: THREADED FERRULES SHALL BE FABRICATED FROM TYPE 304 STAINLESS STEEL. RODS SHALL BE FABRICATED FROM STEEL CONFORMING TO AISI 1038. STEEL COILS SHALL CONFORM TO THE REQUIREMENTS OF AISI 1008. MINIMUM TENSILE STRENGTH OF 60,000 LBS.
SHIMS: 1" HORSESHOE SHIMS SHALL BE FABRICATED FROM 14 OR 18 GAUGE SHEET STEEL.

BREAKAWAY COUPLINGS: BREAKAWAY COUPLINGS SHALL BE MADE FROM ALLOY STEEL CONFORMING TO AMS 6378D WITH EXCEPTIONS TO DECARBURIZATION AND MACROSTRUCTURE CLAUSES OR AN EQUIVALENT MATERIAL, AND SHALL HAVE A MINIMUM TENSILE YIELD STRENGTH OF 130,000 PSI. THE COUPLING SHALL HAVE A MINIMUM TENSILE ULTIMATE STRENGTH OF 40,400 LBS. THE ROCKWELL HARDNESS SHALL BE C32 MINIMUM. COUPLINGS SHALL BE HOT DIP GALVANIZED IN ACCORDANCE WITH ASTM A153, CLEANED AND PHOSPHATED PER FEDERAL SPECIFICATION TT-C-490C, COATED, 0.002" - 0.004" THICK, USING MORTON POWDER COATINGS' 20-7037 BLACK POLYESTER POWDER OR EQUIVALENT.
CHIPPED AREAS OF THE COATED SURFACE SHALL BE REPAIRED. ALL THREADED SURFACES, AFTER COATING, SHALL BE CLEANED TO ALLOW THEM TO FUNCTION PROPERLY.

BRACKETS: BRACKETS SHALL BE MADE FROM ALUMINUM ALLOY 6061-T6 OR AN EQUIVALENT MATERIAL. THE LOAD CONCENTRATING MEMBER (BOSS) SHALL BE MADE FROM STAINLESS STEEL CONFORMING TO ASTM A582, TYPE 416 WITH ROCKWELL HARDNESS OF C33 - C45. LOCATION HOLES FOR THE BREAKAWAY COUPLING SHALL BE ACCURATELY POSITIONED RELATIVE TO THE LOAD CONCENTRATING MEMBER AND BRACKETS SHALL BE PERMANENTLY LABELED WITH THE BRACKET NUMBER TO REFLECT THE HOLE POSITIONING. SEE DWG. NO. BSM-5 FOR IDENTIFICATION OF BRACKETS BY NUMBER.

HINGE PLATES: HINGE PLATES SHALL BE MADE FROM ALLOY STEEL CONFORMING TO AISI 4130 OR AN EQUIVALENT MATERIAL AND SHALL BE GALVANIZED AFTER FABRICATION IN ACCORDANCE WITH ASTM A123. THE HINGE PLATE SHALL HAVE A MINIMUM TENSILE YIELD STRENGTH OF 90,000 PSI AND MINIMUM TENSILE ULTIMATE STRENGTH AS FOLLOWS:

HI-1 7,100 LBS
HI-2 11,300 LBS
HI-3 17,000 LBS

BOLTS, NUTS AND WASHERS: UNLESS NOTED OTHERWISE, ALL BOLTS SHALL CONFORM TO THE REQUIREMENTS OF ASTM A325. SPECIAL BOLTS SHALL CONFORM TO ASTM A449. NUTS SHALL CONFORM TO THE REQUIREMENTS OF ASTM A563, GRADE DH. LOCKWASHERS SHALL CONFORM TO THE REQUIREMENTS OF ANSI B18-21-1. BOLTS, NUTS AND WASHERS SHALL BE GALVANIZED IN ACCORDANCE WITH THE REQUIREMENTS OF ASTM A153. SPECIAL BOLTS MAY BE MECHANICALLY GALVANIZED IN ACCORDANCE WITH THE REQUIREMENTS OF ASTM B695, CLASS 50.

CAP SCREWS: CAP SCREWS ATTACHING BRACKETS TO POSTS SHALL CONFORM TO THE REQUIREMENTS OF ASTM A307 AND SHALL BE HOT DIP GALVANIZED IN ACCORDANCE WITH ASTM A153.

BREAKAWAY HARDWARE: BREAKAWAY HARDWARE SHALL BE SUPPLIED AS COMPONENTS OF A CRASH-TESTED SYSTEM COMPLYING WITH THE GUIDELINES OF NCHRP REPORT 350 (RECOMMENDED PROCEDURES FOR THE SAFETY PERFORMANCE EVALUATION OF HIGHWAY FEATURES). THE MANUFACTURER SHALL SUBMIT TEST REPORTS TO FHWA FOR APPROVAL.

CERTIFICATION: THE CONTRACTOR SHALL PROVIDE A MATERIALS CERTIFICATE TO CERTIFY THAT THE MATERIAL AND COMPONENTS CONFORM TO THOSE SHOWN ON THE PLANS AND SPECIFICATIONS.

CHANGES: NO CHANGE IN DESIGN MATERIALS OR DETAIL ALTERATIONS WILL BE PERMITTED WITHOUT PRIOR APPROVAL BY THE ENGINEER.

INSTALLATION: INSTALLATION OF THE BREAKAWAY ASSEMBLY SHALL BE IN ACCORDANCE WITH THE RECOMMENDED PRACTICES OF THE SUPPLIER.

BASIS OF PAYMENT: THE COST OF FURNISHING AND INSTALLING THE BREAKAWAY HINGE PLATE ASSEMBLY WILL BE INCLUDED IN THE PAY ITEM "STRUCTURAL STEEL SIGN SUPPORTS." THE COST OF FURNISHING AND INSTALLING THE BREAKAWAY COUPLING SYSTEM, CONSISTING OF BRACKET, BREAKAWAY COUPLINGS, SPECIAL BOLTS, AND SHIMS WILL BE INCLUDED IN THE PAY ITEM "SIDE MOUNTED SIGN FOUNDATION." THE COST OF FURNISHING AND INSTALLING FOUNDATIONS, INCLUDING EXCAVATING, CLASS "A" CONCRETE, REINFORCING STEEL AND ANCHOR FERRULES, WILL BE INCLUDED IN THE PAY ITEM "SIDE MOUNTED SIGN FOUNDATION."

TABLE 1 - HINGE BOLTS

| POST SIZE | HINGE ASSEMBLY | | THREAD DESIGNATION (U.S. CUSTOMARY UNITS) |
|---|---|---|---|
| | BOLT DIAMETER | BOLT LENGTH | |
| W6 x 9 | 1/2 | 1 1/2 | 13 UNC |
| ALL OTHERS | 3/4 | 2 1/4 | 10 UNC |

| REV. | DATE | REVISION DESCRIPTION | SHEET NO. |
|---|---|---|---|
| - | - | - | - |
| - | - | - | - |
| - | - | - | - |
| - | - | - | - |
| - | - | - | - |
| - | - | - | - |

THE INFORMATION, INCLUDING ESTIMATED QUANTITIES OF WORK, SHOWN ON THESE SHEETS IS BASED ON LIMITED INVESTIGATIONS BY THE STATE AND IS IN NO WAY WARRANTED TO INDICATE THE CONDITIONS OF ACTUAL QUANTITIES OF WORK WHICH WILL BE REQUIRED.

Plotted Date: 6/2/2016

DESIGNER/DRAFTER: BKC
CHECKED BY: JRH
SCALE AS NOTED

STATE OF CONNECTICUT
DEPARTMENT OF TRANSPORTATION

Filename: ...\SB_Breakaway_Signpost_BSM6_HingeDet.dgn

SIGNATURE/BLOCK: OFFICE OF ENGINEERING
APPROVED BY: DATE:

PROJECT TITLE: MERRITT PARKWAY (ROUTE 15) SAFETY IMPROVEMENTS, RESURFACING, ENHANCEMENTS AND BRIDGE IMPROVEMENTS

TOWN: WESTPORT/FAIRFIELD

DRAWING TITLE: BREAKAWAY SIGN SUPPORTS HINGE DETAILS

PROJECT NO. 158-211
DRAWING NO. BSM-6
SHEET NO. 02.03.07

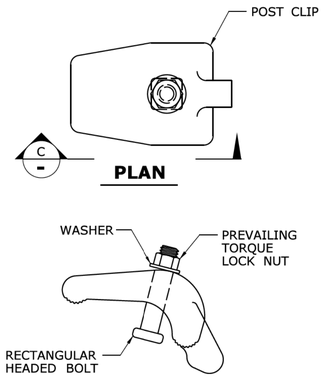


**ELEVATION**
**POST CLIP DETAIL** C -
FULL SCALE

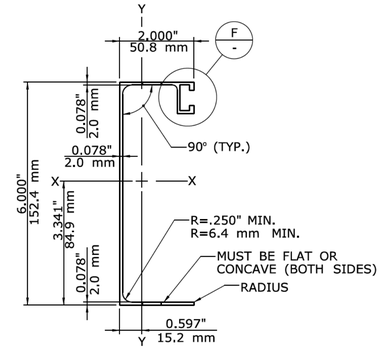


**6" (150 mm) EXTRUDED PANEL** D BS-1
SCALE: 6" = 1-0'

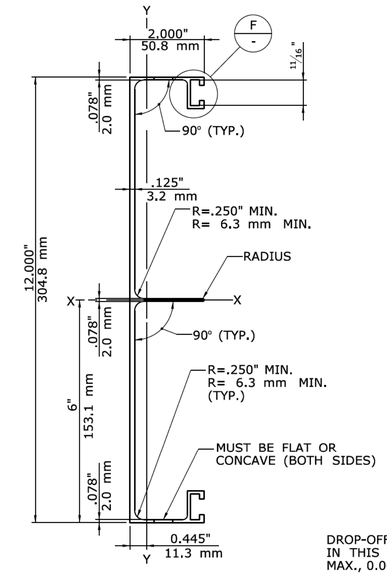


**ALTERNATE A**

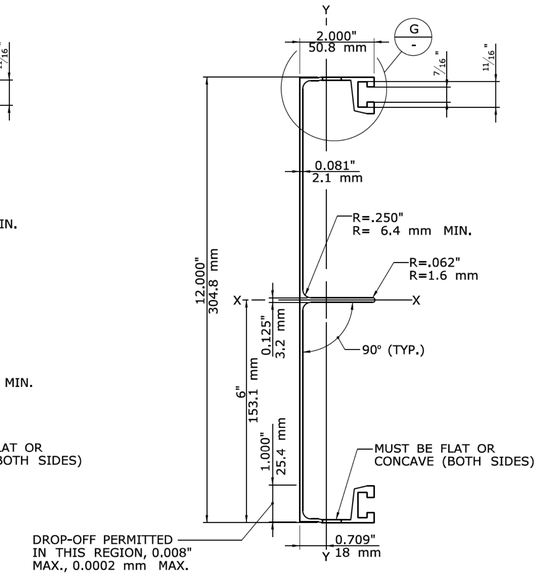


**ALTERNATE B**

**12" (305 mm) EXTRUDED PANEL** E BS-1
SCALE: 6" = 1-0'

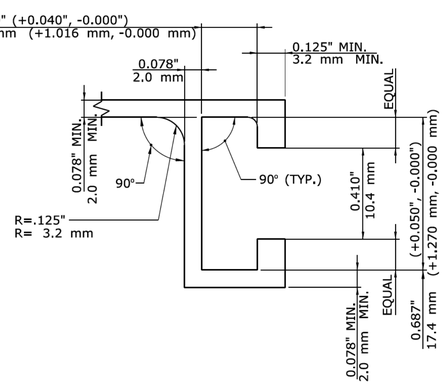


**DETAIL** F -
SCALE: 3 X FULL SCALE

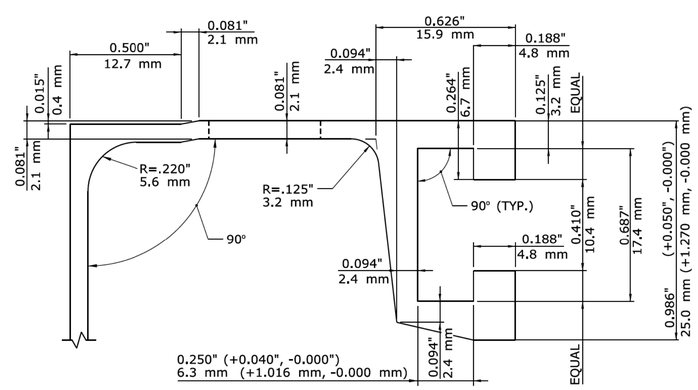


**DETAIL** G -
SCALE: 3 X FULL SCALE

## NOTES

THE EXTRUDED PANELS SHALL CONFORM TO THE REQUIREMENTS ASTM B221, ALLOY 6063-T6 AND THE FOLLOWING SECTION PROPERTIES:

| SECTION | AREA OF SECTION $in^2$ ($mm^2$) | WT. / FT. LBS. / FT. (KG / M) | $I_{X-X}$ $in^4$ ($mm^4$) | $I_{Y-Y}$ $in^4$ ($mm^4$) |
|---|---|---|---|---|
| 6" (150 mm) EXTRUDED PANEL | 0.933 (601.93) | 1.13 (0.16) | 5.023 (2 090 730) | 0.473 (196 877) |
| 12" (305 mm) EXTRUDED PANEL ALTERNATE A | 2.237 (1443.22) | 2.72 (0.38) | 36.284 (15 102 541) | 0.941 (391 674) |
| 12" (305 mm) EXTRUDED PANEL ALTERNATE B | 2.091 (1349.03) | 2.54 (0.35) | 38.947 (16 210 965) | 1.183 (492 402) |

## NOTES

THE PANEL BOLTS SHALL CONFORM TO ASTM A193, CLASS 1, GRADE B8 (TYPE 304). THE NUTS SHALL BE A COMPATIBLE HEX, PREVAILING TORQUE (NYLON INSERT) LOCK NUTS CONFORMING TO ASTM A194, CLASS 1, GRADE B8 (TYPE 304). THE WASHERS SHALL BE A COMPATIBLE, FLAT, CIRCULAR WASHERS CONFORMING TO ASTM A276, TYPE 304, ANNEALED.

THE POST CLIP ASSEMBLY SHALL COMPOSED OF A POST CLIP AND A BOLT WITH A NUT AND WASHER. THE POST CLIP SHALL CONFORM TO THE REQUIREMENTS OF ASTM B26, ALLOY 356.0-T6. THE POST BOLT SHALL BE A $^3/_8$" DIA. X $1^3/_4$" LONG (9 mm DIA. X 44 mm LONG) RECTANGULAR HEAD BOLT CONFORMING TO ASTM A193, CLASS 1, GRADE B8 (TYPE 304). THE NUT SHALL BE A COMPATIBLE HEX, PREVAILING TORQUE (NYLON INSERT) LOCK NUT CONFORMING TO ASTM A194, CLASS 1, GRADE B8 (TYPE 304). THE WASHER SHALL BE A COMPATIBLE, FLAT, CIRCULAR WASHER CONFORMING TO ASTM A276, TYPE 304, ANNEALED. THE DIMENSIONS OF THE RECTANGULAR BOLT HEAD SHALL BE SUCH THAT IT WILL FIT INTO THE EXTRUDED PANEL SLOT AND WILL NOT ROTATE WHILE THE NUT IS BEING TURNED.

THE COST OF FURNISHING AND INSTALLING THE EXTRUDED ALUMINUM SIGN AND CROWN PANELS, INCLUDING THE PANELS BOLTS AND POST CLIP ASSEMBLIES, SHALL BE PAID FOR UNDER THE ITEM "SIGN FACE - EXTRUDED ALUMINUM (TYPE IV RETROREFLECTIVE SHEETING)".

| REV. | DATE | REVISION DESCRIPTION | SHEET NO. |
|---|---|---|---|
| - | - | - | - |
| - | - | - | - |
| - | - | - | - |
| - | - | - | - |
| - | - | - | - |
| - | - | - | - |

THE INFORMATION, INCLUDING ESTIMATED QUANTITIES OF WORK, SHOWN ON THESE SHEETS IS BASED ON LIMITED INVESTIGATIONS BY THE STATE AND IS IN NO WAY WARRANTED TO INDICATE THE CONDITIONS OF ACTUAL QUANTITIES OF WORK WHICH WILL BE REQUIRED.

Plotted Date: 7/6/2016

DESIGNER/DRAFTER: **MC**
CHECKED BY: **DSG/JRH**
SCALE AS NOTED

**STATE OF CONNECTICUT**
**DEPARTMENT OF TRANSPORTATION**

Filename: ...\SB_Aluminum_Sign_Panel_Manufacturing_Details.dgn

SIGNATURE/BLOCK: **OFFICE OF ENGINEERING**
APPROVED BY: Mary E. Bach DATE:

PROJECT TITLE: **MERRITT PARKWAY (ROUTE 15) SAFETY IMPROVEMENTS, RESURFACING, ENHANCEMENTS AND BRIDGE IMPROVEMENTS**

TOWN: **WESTPORT/FAIRFIELD**

DRAWING TITLE: **EXTRUDED ALUMINUM SIGN PANEL MANUFACTURING DETAILS**

PROJECT NO. **158-211**
DRAWING NO. **BSM-7**
SHEET NO. 02.03.08

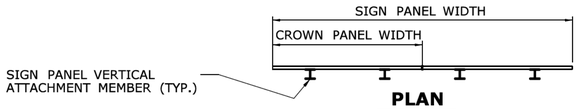


**PLAN**

**OVERHEAD MOUNTED SIGN PANEL**

SCALE: 1/4" = 1' - 0"

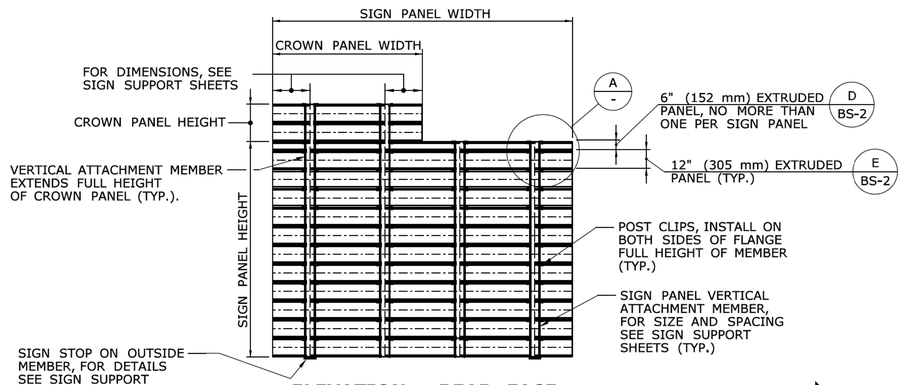


**ELEVATION - REAR FACE**

**OVERHEAD MOUNTED SIGN PANEL**

SCALE: 1/4" = 1' - 0"

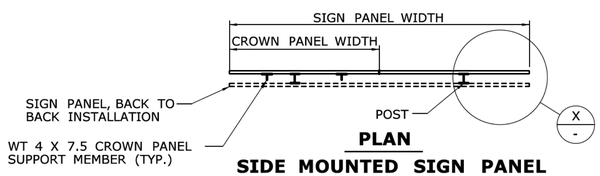


**PLAN**

**SIDE MOUNTED SIGN PANEL**

SCALE: 1/4" = 1' - 0"

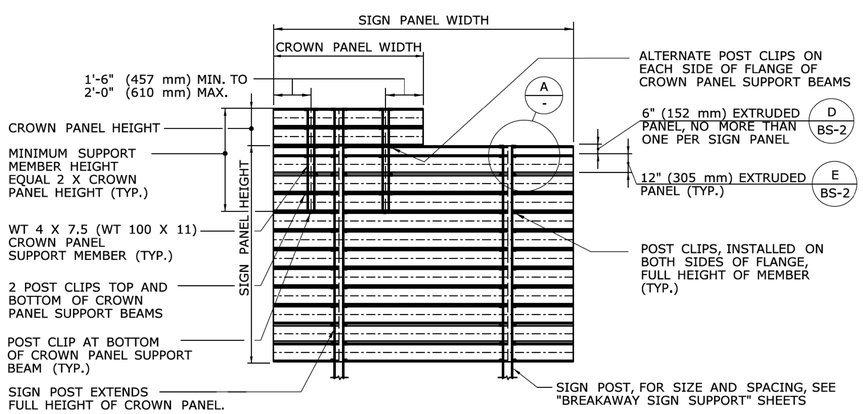


**ELEVATION - REAR FACE**

**SIDE MOUNTED SIGN PANEL**

SCALE: 1/4" = 1' - 0"

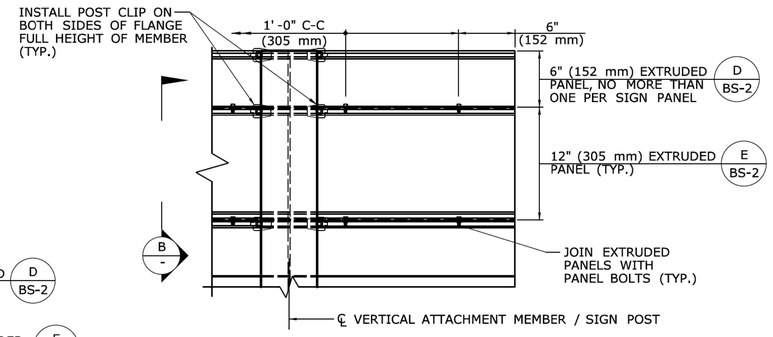


**SIGN PANEL CONNECTION DETAILS** A -

SCALE: 1 1/2" = 1'-0"

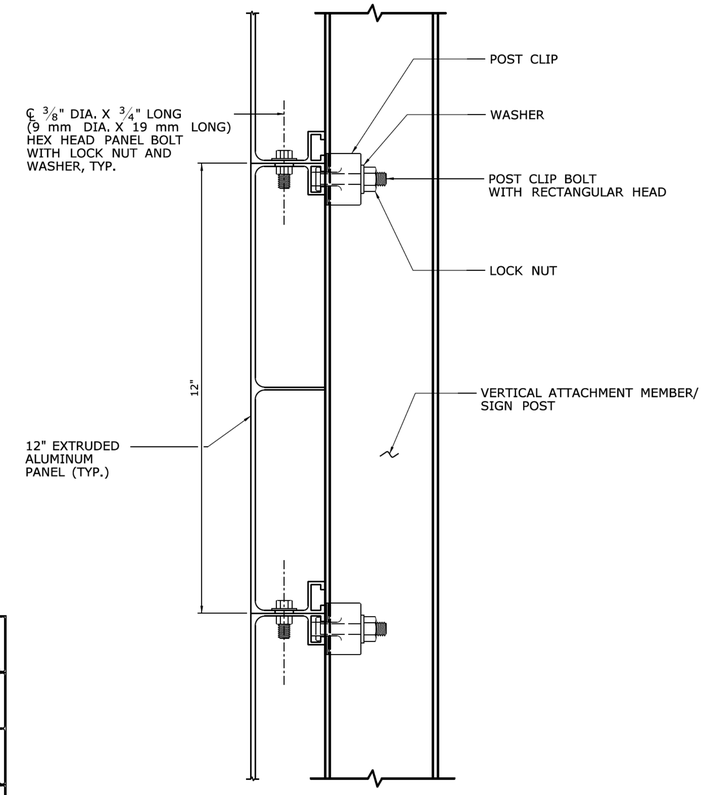


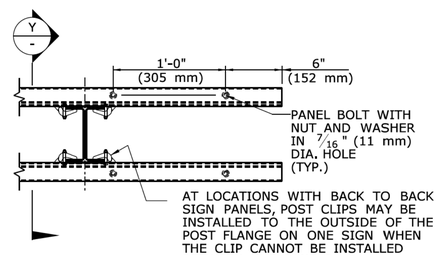


**PLAN - PANEL BOLT** X -

SCALE: 1 1/2" = 1'-0"

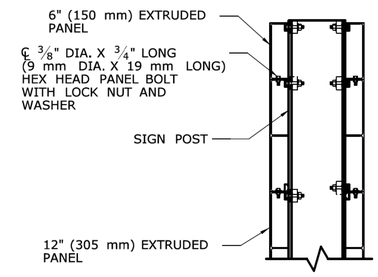


**SECTION - DOUBLE PANELS** Y -

SCALE: 1 1/2" = 1'-0"

NOTE:

IF THE PANEL BOLTS CANNOT BE INSTALLED DUE TO MISALIGNED HOLES, A NEW HOLE(S) SHALL BE INSTALLED IN THE FLANGE OF THE EXTRUDED PANEL. THE NEW HOLE(S) SHALL BE A MINIMUM OF 2" (50 mm) FROM ANY EXISTING PANEL BOLT HOLES.

**SECTION - SIGN PANEL CONNECTION** B -

SCALE: 6" = 1'-0"

| REV. | DATE | REVISION DESCRIPTION | SHEET NO. |
|---|---|---|---|
| - | - | - | - |
| - | - | - | - |
| - | - | - | - |
| - | - | - | - |
| - | - | - | - |
| - | - | - | - |

THE INFORMATION, INCLUDING ESTIMATED QUANTITIES OF WORK, SHOWN ON THESE SHEETS IS BASED ON LIMITED INVESTIGATIONS BY THE STATE AND IS IN NO WAY WARRANTED TO INDICATE THE CONDITIONS OF ACTUAL QUANTITIES OF WORK WHICH WILL BE REQUIRED.

Plotted Date: 7/6/2016

DESIGNER/DRAFTER: MC

CHECKED BY: DSG/JRH

SCALE AS NOTED

STATE OF CONNECTICUT
DEPARTMENT OF TRANSPORTATION

Filename: ...\SB_Aluminum_Sign_Panel_Connection_Details.dgn

SIGNATURE/ BLOCK:

OFFICE OF ENGINEERING

APPROVED BY: DATE:

Mary E. Bach

PROJECT TITLE:

MERRITT PARKWAY (ROUTE 15)
SAFETY IMPROVEMENTS, RESURFACING, ENHANCEMENTS AND BRIDGE IMPROVEMENTS

TOWN: WESTPORT/FAIRFIELD

DRAWING TITLE: EXTRUDED ALUMINUM SIGN PANEL CONNECTION DETAILS

PROJECT NO. 158-211

DRAWING NO. BSM-8

SHEET NO. 02.03.09