# BRIDGE MONITORING NETWORK - INSTALLATION AND OPERATION

**December 2006**

**John T. DeWolf, University of Connecticut**
**Paul F. D'Attilio, Connecticut DOT**
**Eric G. Feldblum, Connecticut DOT**
**Robert G. Lauzon, Connecticut DOT**

**Report No.**
**CT-2217-F-06-10**

**Connecticut Department of Transportation**
**Bureau of Engineering and Highway Operations**
**Research and Materials**

**Keith R. Lane, P.E.**
**Director of Research and Materials**

**James M. Sime, P.E.**
**Manager of Research**

**A Project in Cooperation with the U.S. Department of Transportation**
**Federal Highway Administration**

**Technical Report Documentation Page**

| | | |
|---|---|---|
| 1. Report No.<br>CT-2217-F-06-10 | 2. Government Accession No. | 3. Recipient's Catalog No.<br>2217-F-06-10 |
| 4. Title and Subtitle<br>Bridge Monitoring Network – Installation and Operation | | 5. Report Date<br>December 2006<br>6. Performing Organization Code<br>SPR-2217 |
| 7. Author(s)<br>J.T. DeWolf, P.F. D'Attilio, E.G. Feldblum, R.G. Lauzon | | 8. Performing Organization Report No.<br>CT-2217-F-06-10 |
| 9. Performing Organization Name and Address<br>University of Connecticut<br>Connecticut Transportation Institute<br>Storrs, CT 06269-5202 | | 10. Work Unit No. (TRAIS)<br>11. Contract or Grant No.<br>CT-SPR Study No. 2216 |
| 12. Sponsoring Agency Name and Address<br>Connecticut Department of Transportation<br>280 West Street<br>Rocky Hill, CT 06067-0207 | | 13. Type of Report and Period Covered<br>Final Report<br>January 1995 – August 2006<br>14. Sponsoring Agency Code |

15. Supplementary Notes

This study was conducted in cooperation with the U.S. Department of Transportation, Federal Highway Administration.

16. Abstract

This report discusses the planning, design and installation of structural monitoring systems on a network of bridges in the State of Connecticut. The project, "Monitoring Highway Bridges in Connecticut," began with the development of a generic set of guidelines for using currently available monitoring equipment to serve as a basis for designing long-term systems for each of the different bridges. These were then used to design individual monitoring systems that were tailored to each bridge, using sensors for strain, temperature, tilt and vibration. Monitoring has been conducted on a continuous basis, with excitation provided by normal traffic loading. Results from the four fully operational monitored bridges are presented. Researchers worked to use long-term monitoring technologies to learn how bridges behave over many years and to examine and analyze data from the monitoring systems to establish a basis for long-term structural health monitoring. Systems for five additional bridges are planned or under construction.

| | |
|---|---|
| 17. Key Words<br>Bridge monitoring, testing, steel bridges, concrete bridges, instruments for measuring specific phenomena, accelerometers for vibration, strain gages for stresses, tilt meters and RTD's for thermal movement. | 18. Distribution Statement<br>No restrictions. This document is available to the public through the National Technical Information Service Springfield, Virginia 22161 |

| | | | |
|---|---|---|---|
| 19. Security Classif. (of this report) | 20. Security Classif. (of this page) | 21. No. of Pages | 22. Price |
| Unclassified | Unclassified | 45 | |

**Form DOT F 1700.7 (8-72)**

## Acknowledgements

This research has been a joint effort between the University of Connecticut and the Connecticut Department of Transportation, with funding from the Connecticut Department of Transportation and the U.S. Federal Highway Administration. The support of the Connecticut Transportation Institute, located at the University of Connecticut, is gratefully acknowledged. Many graduate students at the University of Connecticut have worked on this research project over the years, including those listed in the references as coauthors. Their efforts and contributions have been invaluable to this research.

## Executive Summary

In 1994, the Connecticut Department of Transportation and the University of Connecticut began a large-scale research program to install permanent monitoring systems on a network of bridges in the State of Connecticut. The project was developed based on a decade of research in the State to evaluate structural strains and accelerations, using both short and long-term bridge monitoring systems on a wide variety of bridges.

The prime goal of this project has been to develop monitoring systems and techniques for the quantitative evaluation of bridges. The project began with development of a network of bridges for study, providing an opportunity to investigate, develop and evaluate the structural behavior of different bridges in the State that are critical to its transportation infrastructure. At this time, five systems have been placed on bridges, with four fully operational. Additional systems have been planned. Two bridges are being added to the network during this calendar year.

This report describes the development of a generic specification for the monitoring systems. The key components of the systems are the control unit, sensors, software and communication capability. The extensive information developed for each of these areas has been used to design the different systems, using accelerometers, strain gages, temperature transducers and tilt-meters. All systems are operated remotely from the University of Connecticut, providing the ability to reset monitoring parameters, alter software collection and save data.

Sensor selection, system installation, data acquisition approach, data reduction components, data interpretation and storage of the long-term data are discussed for each of the four fully operating systems. Bridges include a post-tensioned curved concrete box girder bridge, a large post-tensioned segmental concrete box-girder bridge, a curved steel box girder-bridge, and a steel multi-girder bridge.

Monitoring systems collect data on a continuous basis. All data sets are taken from normal traffic loading, with measurements for temperature. Data sets are collected in two general ways. Temperature and tilt are saved at specified intervals. Strain and accelerations are saved using a trigger basis, with data typically saved only when a larger vehicle has crossed the bridge. All data sets are saved in a database at the University for additional evaluations and for long-term structural health monitoring.

This continuing research has shown how long-term bridge monitoring systems can be used in the evaluation of the in-service behavior, and it has been used to develop a basis for long-term structural health monitoring of each bridge. During this research, a series of papers have been developed to provide information on both the overall project and each monitored bridge.

Table - Four Fully-Operational Bridge Monitoring Systems in Connecticut

| Bridge | Bridge Description | Monitoring System | Date of Installation |
|---|---|---|---|
| **Post-tensioned Box girder bridge** | Curved, post-tensioned five-celled box girder bridge continuous over 3 unequal spans | 6 accelerometers<br>16 strain gages<br>12 temperature sensors<br>6 tilt-meters | 1999 |
| **Post-tensioned segmental box girder bridge** | Multi-span segmental box-girder bridge with post-tensioning | 16 temperature sensors | 1999 |
| **Steel Box Girder Bridge** | Multi-span curved continuous double steel box-girder bridge | 8 temperature sensors<br>6 tilt-meters<br>8 accelerometers | 2001 |
| **Steel Multi-Girder Bridge** | Three-span, simply supported bridge with 8 steel plate girders | 20 strain gages | 2004 |

# SI* (MODERN METRIC) CONVERSION FACTORS

## APPROXIMATE CONVERSIONS TO SI UNITS

| SYMBOL | WHEN YOU KNOW | MULTIPLY BY | TO FIND | SYMBOL |
|---|---|---|---|---|
| | | **LENGTH** | | |
| in | inches | 25.4 | millimeters | mm |
| ft | feet | 0.305 | meters | m |
| yd | yards | 0.914 | meters | m |
| mi | miles | 1.61 | kilometers | km |
| | | **AREA** | | |
| $in^2$ | square inches | 645.2 | square millimeters | $mm^2$ |
| $ft^2$ | square feet | 0.093 | square meters | $m^2$ |
| $yd^2$ | square yard | 0.836 | square meters | $m^2$ |
| ac | acres | 0.405 | hectares | ha |
| $mi^2$ | square miles | 2.59 | square kilometers | $km^2$ |
| | | **VOLUME** | | |
| fl oz | fluid ounces | 29.57 | milliliters | mL |
| gal | gallons | 3.785 | liters | L |
| $ft^3$ | cubic feet | 0.028 | cubic meters | $m^3$ |
| $yd^3$ | cubic yards | 0.765 | cubic meters | $m^3$ |
| | NOTE: volumes greater than 1000 L shall be shown in $m^3$ | | | |
| | | **MASS** | | |
| oz | ounces | 28.35 | grams | g |
| lb | pounds | 0.454 | kilograms | kg |
| T | short tons (2000 lb) | 0.907 | megagrams (or "metric ton") | Mg (or "t") |
| | | **TEMPERATURE (exact degrees)** | | |
| °F | Fahrenheit | 5 (F-32)/9 or (F-32)/1.8 | Celsius | °C |
| | | **ILLUMINATION** | | |
| fc | foot-candles | 10.76 | lux | lx |
| fl | foot-Lamberts | 3.426 | candela/$m^2$ | cd/$m^2$ |
| | | **FORCE and PRESSURE or STRESS** | | |
| lbf | poundforce | 4.45 | newtons | N |
| lbf/$in^2$ | poundforce per square inch | 6.89 | kilopascals | kPa |

## APPROXIMATE CONVERSIONS FROM SI UNITS

| SYMBOL | WHEN YOU KNOW | MULTIPLY BY | TO FIND | SYMBOL |
|---|---|---|---|---|
| | | **LENGTH** | | |
| mm | millimeters | 0.039 | inches | in |
| m | meters | 3.28 | feet | ft |
| m | meters | 1.09 | yards | yd |
| km | kilometers | 0.621 | miles | mi |
| | | **AREA** | | |
| $mm^2$ | square millimeters | 0.0016 | square inches | $in^2$ |
| $m^2$ | square meters | 10.764 | square feet | $ft^2$ |
| $m^2$ | square meters | 1.195 | square yards | $yd^2$ |
| ha | hectares | 2.47 | acres | ac |
| $km^2$ | square kilometers | 0.386 | square miles | $mi^2$ |
| | | **VOLUME** | | |
| mL | milliliters | 0.034 | fluid ounces | fl oz |
| L | liters | 0.264 | gallons | gal |
| $m^3$ | cubic meters | 35.314 | cubic feet | $ft^3$ |
| $m^3$ | cubic meters | 1.307 | cubic yards | $yd^3$ |
| | | **MASS** | | |
| g | grams | 0.035 | ounces | oz |
| kg | kilograms | 2.202 | pounds | lb |
| Mg (or "t") | megagrams (or "metric ton") | 1.103 | short tons (2000 lb) | T |
| | | **TEMPERATURE (exact degrees)** | | |
| °C | Celsius | 1.8C+32 | Fahrenheit | °F |
| | | **ILLUMINATION** | | |
| lx | lux | 0.0929 | foot-candles | fc |
| cd/$m^2$ | candela/$m^2$ | 0.2919 | foot-Lamberts | fl |
| | | **FORCE and PRESSURE or STRESS** | | |
| N | newtons | 0.225 | poundforce | lbf |
| kPa | kilopascals | 0.145 | poundforce per square inch | lbf/$in^2$ |

*SI is the symbol for the International System of Units. Appropriate rounding should be made to comply with Section 4 of ASTM E380.
(Revised March 2003)

## Table of Contents

Technical Report Documentation Page ii
Acknowledgments iii
Executive Summary iv
Modern Metric Conversion Factors vi
Table of Contents vii
List of Figures viii

Chapter 1 1
Introduction 1
Background to Research 2
Development of Generic Monitoring Guidelines 3
Development of Individual Monitoring Systems 6

Chapter 2 8
Introduction 8
Post-Tensioned Box Girder Bridge 8
Post-Tensioned Segmental Box Girder Bridge 14
Steel Box Girder Bridge 18
Steel Multi-Girder Bridge 21
Additional Monitoring Systems 24

Chapter 3 29
Conclusions 29

References 31

Appendix A - Publications Developed from this Research 34

## List of Figures


1 Aerial View of Post-Tensioned Box Girder Bridge ..... 9

2 Underside of Post-Tensioned Box Girder Bridge ..... 9

3 Plan and Elevation of Post-Tensioned Box Girder Bridge ..... 10

4 Cross-Section of Post-Tensioned Box Girder Bridge ..... 10

5 Location of Sensors for Post-Tensioned Box Girder Bridge ..... 11

6 Enclosure for System Control and Cable Conduit for Post-Tensioned Box Girder Bridge ..... 12

7 Installation of Temperature Sensor on Post-Tensioned Box Girder Bridge ..... 13

8 Aerial View of Post-Tensioned Segmental Box Girder Bridge ..... 15

9 Elevation of Post-Tensioned Segmental Box Girder Bridge ..... 15

10 Cross-Section of Post-Tensioned Segmental Box Girder Bridge ..... 16

11 Interior of Post-Tensioned Segmental Box Girder Bridge ..... 17

12 Aerial View of Steel Box Girder Bridge ..... 18

13 Support at Pier 3 for Steel Box Girder Bridge ..... 19

14 Plan View of Steel Box Girder Bridge ..... 20

15 Typical Cross-Section of Steel Box Girder Bridge ..... 20

16 Aerial View of Steel Multi-Girder Bridge ..... 21

17 Elevation of Steel Multi-Girder Bridge ..... 22

18 Location of Sensors on Steel Multi-Girder Bridge ..... 22

19 Installation of Strain Gages on Steel Multi-Girder Bridge ..... 23

20 Monitoring Cabinet for Steel Multi-Girder Bridge ..... 23

21 Elevation of Concrete Multi-Girder Bridge (NEBT) 25

22 Multi-Steel-Plate Girder Bridge 25

23 Large Multi-Span Steel Truss Bridge with Central Hung Trusses 26

24 Extradosed Bridge 27

25 Old Truss Swing Bridge 28

# Chapter 1

## Introduction

For many years, transportation agencies, universities, private firms and research organizations have instrumented individual bridges on a temporary basis for a variety of structural needs. These temporary systems have differed in complexity and functionality. While these systems have provided valuable information, little has been done to develop and operate long-term monitoring systems. The current research project was developed to place permanent monitoring systems on a series of bridges in the State of Connecticut, and at this time, five continuous monitoring systems have been installed on in-service bridges, and four are fully operational. Other systems are in design. These monitoring systems are producing information on the long-term performance of the different types of bridges, each with unique designs and monitoring requirements. The project utilizes the extensive experience gained from two decades of bridge monitoring in the State of Connecticut by researchers at the University of Connecticut and in the Connecticut Department of Transportation.

This project was developed to meet one of the Federal Highway Administration's research objectives, which was to develop tools and techniques for the quantitative evaluation of highway bridges. The project goal has been to develop a global bridge monitoring program to instrument and monitor a network of typical highway bridges. This project includes the investigation, development and evaluation of methods for long term measurement and monitoring of the structural behavior of these bridges. The study has included background modeling and analysis, needed to design efficient monitoring systems. One of the requirements for the project has been the monitoring of concrete and prestressed concrete bridges. Included in the research has been the need to investigate issues associated with sensor selection and design, instrumentation system installation, data acquisition, data reduction, data interpretation and long term storage of data. The long term reliability of the instrumentation and monitoring system was a key area of interest.

The project began with the development of a generic specification to serve as a basis for development of individual monitoring systems, using an integrated monitoring system approach to develop systems for a variety of bridge types and sensor types. The project has utilized existing technology to use different kinds of sensors and techniques for the assessment of behavior, based on the type of bridge studied. The work has also involved the development of software that is tailored to the individual bridges. The resulting interactive software automates the collection of data for the different sensors and provides information that is readily available to engineers and Department managers.

The project has provided researchers with experience purchasing, installing, and operating monitoring systems developed for a network of remote systems on different in-service highway bridges. A goal has been to develop information on the long-term performance of these structures.

## Background to Research

Bridge monitoring research at the University of Connecticut began in 1984 [1, 2]. The projects have assisted the Connecticut Department of Transportation in their need for continual evaluation of the State's bridges. This work has involved both strain measurements and vibration behavior. Both short and long term studies have been conducted. Short term monitoring studies have typically been based on strain monitoring, with some effort to integrate vibration information with strain data. These studies have generated data for the evaluation of specific members or connections and have provided information needed for the determination of overall bridge performance. Long term monitoring has involved the use of accelerometers to determine vibration information, both to evaluate the causes of what was perceived as excessive vibrations and to evaluate the overall structural integrity. The following briefly reviews what has been done in these two areas in Connecticut.

Strain Monitoring – Short term monitoring studies have involved the development and application of portable monitoring systems for the determination of strains and stresses. They have normally involved testing over one to three days. While most studies have involved the use of 8 strain gages or less, as many as 100 gages, not all read simultaneously, have been used. Strain data have been collected under normal traffic for most bridges. In some, test vehicles were used, and in the case of movable bridges, data was collected during opening and closing of the bridge structure. In addition software has been developed for both the strain monitoring and post-processing of the data to evaluate the remaining fatigue life.

This work involved short term field monitoring approximately 20 different steel bridge types and two reinforced concrete bridges [3]. The studies have addressed the following needs:

1. Fatigue problems - Evaluation of the causes, determination of whether repairs should be made, and if needed, how they can be carried out economically. This has included diaphragm connections, connections between girders, weld crack problems and evaluation of cracks at changes in beam cross-sections.

2. Capacity evaluation - Determination of stress levels in major load carrying members that have aged and/or corroded.

3. Live load rating - Evaluation of load distribution to different girders in a multi-girder bridge.

4. Temporary supports - Evaluation of potential stresses caused by impact with a drifting ice pack.

5. Movable bridges – Evaluation of main drive shafts in a bascule bridge and evaluation of load distribution to different members in another bascule bridge.

6. Excessive deflections - Testing of a newly constructed curved bridge in which the deflections were larger than predicted. This study allowed the bridge to be opened on time.

7. Historic truss bridge - Determination of how loads are transferred to the support and how different truss elements are performing after strengthening.

8. Older reinforced concrete bridges - Determination of load carrying capacity of bridges constructed with box girders and arch spans.

Vibration Monitoring – The bridge monitoring research began with a vibration study to evaluate a continuous four span, non-prismatic steel plate-girder bridge across the Connecticut River [4]. The State was receiving complaints from the public about the vibrations. The University of Connecticut was requested to conduct a field study to evaluate the cause of the vibrations, to determine if they would be detrimental to the structural integrity and to suggest methods for alterations, if needed. An extensive experimental study was carried out to determine the natural frequencies and corresponding mode shapes. A finite element analysis was used to correlate the field data with the actual vibration modes. The results demonstrated that the accelerations were higher than desirable in terms of comfort levels, but that they were not causing structural problems. Continued analytical studies have explained the causes of vibrations and provided general information on how they can be reduced.

Vibration monitoring of additional bridges was used to develop techniques for global bridge monitoring. This work was used to design a prototype monitoring system for continuous, long-term installation on bridges; this work was carried out with an economic development grant from the State of Connecticut and in conjunction with a Connecticut company specializing in the manufacturing of vibration equipment. The system was successfully used on two different bridges during all weather conditions [5]. An additional study was used to evaluate the vibration behavior in an existing bridge when a crack was introduced into the exterior girder [6]. This study demonstrated that changes in the overall vibration signature can show conclusively major changes in the structural integrity.

**Development of Generic Monitoring Guidelines**

At the start of this project, generic monitoring guidelines were established to facilitate development and procurement of monitoring systems for a variety of bridges [7]. Monitoring was to be controlled from computers at the University of Connecticut and in the Connecticut Department of Transportation. The generic guidelines involved four parts needed for a fully operational monitoring system: (a) System Control Unit including

hardware and computer requirements for overall management of monitoring and data analysis; (b) Sensors for collecting different types of data; (c) Software to control data collection and to provide operating engineers with needed information; (d) Communication Capability so that control of the system and information collected are carried out from a remote monitoring location.

All systems were required to have flexibility to allow for incorporation of different types of sensors and to provide options on how data are collected and processed. In addition, all systems needed to be expandable. An important requirement was that the system should operate under normal traffic conditions. This would allow for continuous monitoring, without necessitating the need to interrupt traffic flow.

System Control Unit

The system control unit operates the monitoring system. A host computer controls the excitation and data interpretation hardware, stores the recorded data on the hard disk, analyzes the data and provides communication capability with remote computers. The host computer is the brain of the system. A weatherproof box was specified for all control units. Flexible conduit is typically used for all exposed cables.

The signal processing hardware links the monitoring system directly to the sensors. It is used to excite the sensors electrically and to feed the resulting electronic voltage back to the monitoring system. This voltage is then converted to the appropriate engineering units of interest, i.e. strain, acceleration, temperature, etc. This hardware can be located either in the system control unit or in satellite units.

Sensors

Since one of the aims of the project was to use a variety of sensors currently in use for bridge monitoring, it was important to develop guidelines for a variety of sensors. The project has been based on the use of four sensor types, based on the information needed:

(1) Structural - Strains, deformations, tilt, vibrations, forces, continuity and crack development.

(2) Environmental - Temperature, dew point, relative humidity, wind speed and direction, identification of precipitation type, rainfall rate, snowfall intensity and fog conditions.

(3) Traffic Flow - Volume of traffic, vehicle weights and vehicle speeds.

(4) Maintenance - Pavement information, corrosion and paint condition, bearing conditions and condition of cathodic protection system.

Sensor types used in the project have included strain gages, tilt meters, accelerometers, LVDT (Linear variable displacement transducers), acoustic emission sensors, sensors for counting vehicles, and temperature sensors. Considerations needed for the choice of sensors include data ranges, sensitivity, durability, power requirements, and signal conditioning requirements. Additional requirements include the option of being able to move the sensor to different locations and of being able to set sensor requirements, such as input gain, sensitivity and filter characteristics, from the remote monitoring site.

Software

The requirements for the software include system control, operation of the system and the sensors, data analysis and communication. Guidelines were developed for each of these operations. The general requirements are:

(1) All software must be addressable from the host computer at a remote site, for alteration, replacement, additions, etc.

(2) Interfaces with all software must be readily understandable by those operating the system, using graphics and clearly worded statements or menus.

(3) Documentation, both hard copy and in the computer software, must be provided and readily understandable by those using the monitoring system.

(4) All software must be integrated into the field system, so that it is not necessary to have a remote computer operating to fully operate the system.

(5) Diagnostics must be provided for all software.

A critical capability has been control of all sensors with the software, allowing for different ways to collect and save data. The software for different sensors needs to be addressable by the operating software, must allow for data in different formats and be capable of being operated through the monitoring system software. The software must be capable of displaying the information in different formats and exporting data in suitable format for the data analysis software. The software also must be able to reduce the collected data to readily-usable information, with options on storing peak values only, a time history based on selected pieces of data only and processing of the data into alternative values, such as natural frequencies and mode shapes for vibration data or numerical values to indicate how much change has occurred.

Communication Capability

A key requirement is the need operate the system and access data remotely.

Communication software should be capable of high speed data communication using different kinds of data links, including modems with a telephone line, modems with a cellular connection, a data link, and telemetry or radio link.

Since large amounts of data are generated in the project, transmission speed is often a critical consideration. An alternative that should be considered is to process the data in the field so that only selected results are transmitted. At the start of the project, modems were specified. A current consideration is to use digital subscriber line (DSL) connections for improved communication.

**Development of Individual Monitoring Systems**

Installation of Systems - The initial phase was to place secure control cabinets, allowing space for the system control unit, communication hardware and a cooling/heating unit as needed to keep the temperatures within the box to acceptable limits. Previous experience with a prototype vibration monitoring system demonstrated the need for cooling/heating units in all control boxes.

Control cabinets were wired for both electricity and telephone access. The project was initially based on use of modems for interaction with the remote monitoring facilities. As computer technology has developed, recent work has indicated that DSL connections are both possible and desirable using conventional phone lines. Currently, most field monitoring systems in the project are being converted to DSL connections. These will allow for high speed connections, with the opportunity to see data in real-time and with improved opportunities to develop interactive monitoring software.

Data Collection – The project is based on collecting data during regular operational periods, i.e. at 24-hour (daily) intervals. The goal is to get data on a continuous basis. Many vibration and strain studies reported in the literature have been based on closing the bridge to traffic. In the case of vibration studies, this allows for impact testing using a known input signal. The main advantage provided by impact testing is that the energy from the impact mechanism is distributed continuously over the frequency domain, resulting in the determination of a large number of natural frequencies. The alternative is to conduct ambient testing using normal traffic. With ambient testing, there is increased signal noise, and as a result, it is not always possible to establish as many natural frequencies as with impact studies. In the case of strain studies, closure of the bridge provides an opportunity to conduct load testing with a known vehicle, with predetermined axle spacing and axle loads. The end result is better data. However, previous studies in Connecticut have shown that normal traffic can be used to establish information on the structural integrity, and this approach is the basis of all monitoring systems used in this study.

Typically, data sets are collected in two general ways, depending on the data type. Temperature and tilt are normally collected at specified intervals. Accelerations and

strains are collected using a trigger approach. Accelerations, used with FFT software, are used to provide frequency spectra. Strains, used to get information on vehicle passages, provide live load information. Both accelerations and strains are collected at very small time intervals, and as a result they generate large data sets. What is of interest typically for these two types of information are data associated with large vehicles, typically truck traffic. Therefore, in order to reduce the quantity of data obtained from accelerations and strains, a trigger approach is used.

Temperature data is typically collected at 15- or 30-minute intervals, which is consistent with expected variations. This allows for plots of variations in both the vertical and horizontal directions, necessary to determine the influence of temperature on the stress/strain behavior and to gain insight into the overall deformations. The time intervals can be set remotely.

Tilt meters provide rotational changes in either the transverse or longitudinal directions. This information is also collected typically at 15- to 30-minute intervals. The tilt information gives global changes corresponding to static displacements. It is not possible to collect dynamic information due to the minimum time interval provided by these sensors. The tilt information has been especially useful in calibrating finite element models. It has also provided information on how temperature changes influence overall bridge behavior.

Accelerations, used with FFT software, are used to provide frequency spectra. Strains, used to get information on vehicle passages, provide live load information. Both accelerations and strains are collected using a trigger approach. This involves checking the output of a specified sensor. When the output level is at a preset level, a data set is saved which comprises a time period prior to reaching the trigger level and a time period following the trigger level. The total time period is set to assure that the resulting data set covers the full passage of the vehicle.

Data Storage – The large quantities of data collected are being saved on a web Server within the School of Engineering computer system, with controlled access. Data sets are typically organized into monthly segments, and key results for each month are retrievable along with comparative information. All data sets are backed up on a parallel hard disk, as well as onto CDs for storage in a different location.

# Chapter 2

## Introduction

Monitoring systems have been designed to collect information on current needs/performance, as required by maintenance personnel, to provide the added assurance that bridge structures are performing satisfactorily, to develop detailed knowledge of exactly how a structure is behaving, particularly with respect to larger loads, to monitor climate changes and aging and to learn how continuous, structural health monitoring can provide a supplemental bridge inspection tool. The goal in this research has been to develop a network of remote monitoring systems to provide first-hand knowledge and experience in the installation and operation of these types of systems and provide a solid foundation for the enhancement of these systems.

Currently, monitoring systems have been placed on five bridges, with four fully operational. These bridges were selected because they are critical to the State of Connecticut and because they provide a variety of bridge types to study. In the following, the four fully operational bridge systems are discussed separately, with a description of the bridge, the design of the monitoring system, and what has been learned from the monitoring.

## Post-Tensioned Box Girder Bridge

This bridge (NBI # 05686) was the first monitored in the project, and it has the largest number of sensors. The generic specification was invaluable in preparing the document defining requirements for the monitoring system, and the experience in purchasing and installing this system provided substantial guidance in the development of subsequent monitoring systems.

The bridge was constructed in 1985 in East Harford, Connecticut. The bridge is a curved, post-tensioned, five-celled, box-girder bridge with three unequal spans. An aerial view is shown in Fig. 1. There are two curved box girder bridges in the interchange, located between the two transverse expansion joints, appearing as white lines in the photo. The monitored bridge is the one on the right, i.e. the longer of the two bridges. It carries traffic in the westbound direction. Figure 2 shows a view taken below the bridge from one of the two abutments.

Figure 1 – Aerial View of Post-Tensioned Box Girder Bridge

Figure 2 - Underside of Post-Tensioned Box Girder Bridge

The bridge plan, elevation and cross-sections are shown in Figures 3 and 4. The box girders are filled in over the interior supports so that there are a total of 15 separate interior cells in the bridge. Each is accessed from a hatch on the underside of the bridge. The two interior round column supports are connected integrally with the superstructure. The ends are partially restrained against longitudinal displacements, so that they are neither pinned nor fixed.

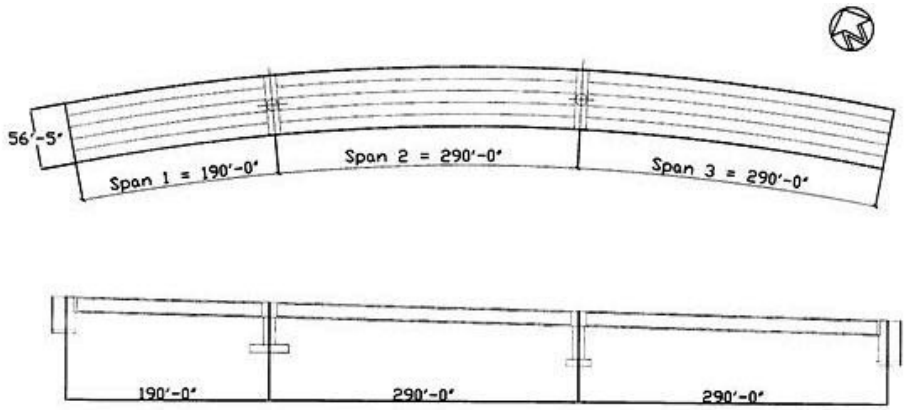


Figure 3 - Plan and Elevation of Post-Tensioned Box Girder Bridge

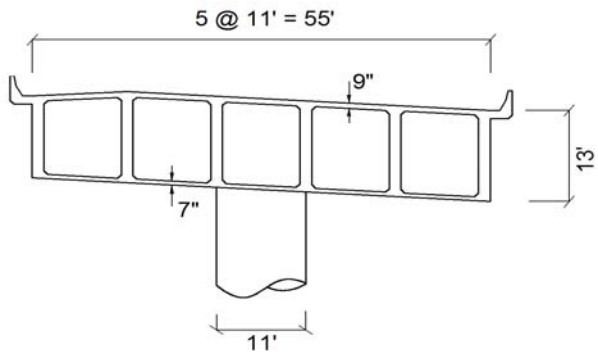


Figure 4 – Cross-Section of Post-Tensioned Box girder Bridge.

The bridge experienced excessive cracking in the pier caps, columns and decks following construction. A large number of cracks were epoxy injected in the first few years following completion. The continued crack growth led to more extensive repairs in 1998, prior to installation of the monitoring system. This included injection of cracks with epoxy, the addition of post-tensioning over the interior column supports in the transverse direction and FRP wrapping of the two interior columns.

The requirements for the monitoring system were developed to provide information on the overall behavior. One of the key requirements in this and other systems is that the cost of the total system be reasonable. The concern expressed by the Department of Transportation was that the system should be economical so that ultimately it could be duplicated on other bridges. The system was also designed so that it would use the four main types of sensors that were currently used for bridge monitoring, with 6 accelerometers, 16 strain gages, 12 temperature sensors and 6 tiltmeters. All sensors were to be placed on the inside of the box girders, distributed over the three spans and across the cross-section. The planned layout is shown in Figure 5. The generic guidelines were used to develop a request for bids.

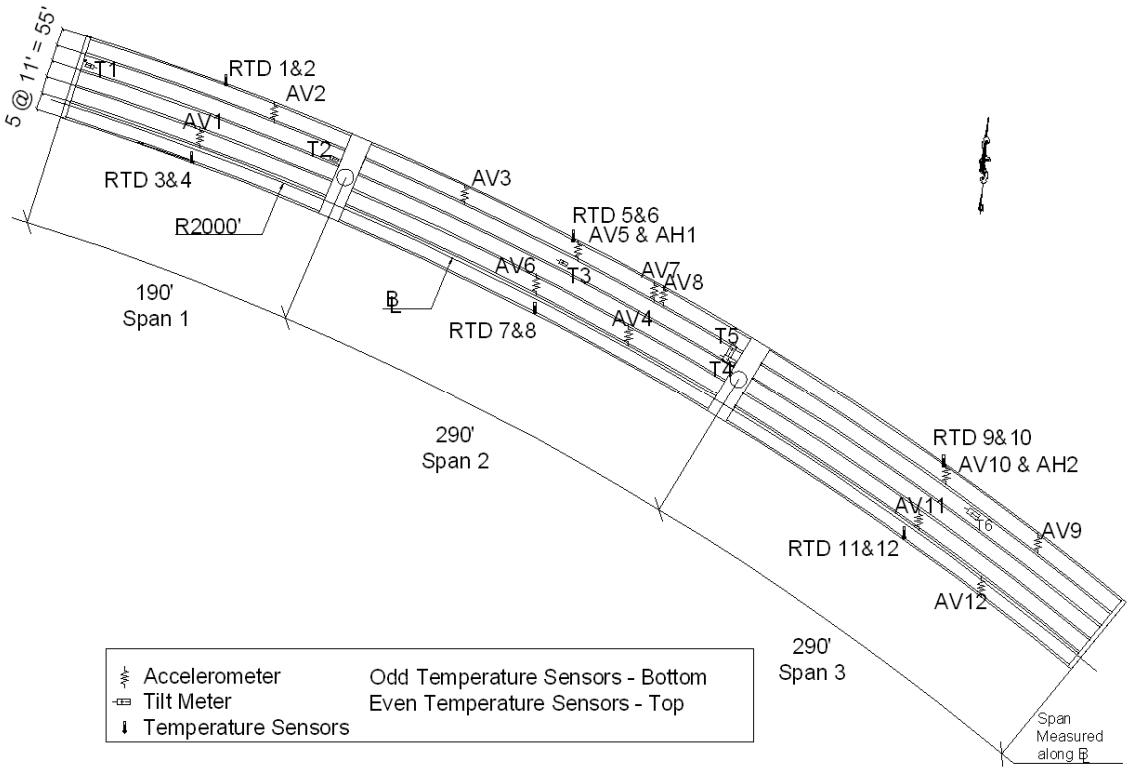


Figure 5 - Location of Sensors for Post-Tensioned Box Girder Bridge

Two companies bid on the system, and the lowest bidder was selected, CTL in Illinois. CTL supplied a manual on the system, including both installation and operation [8]. The monitoring system was installed in the summer of 1999 [9]. The control system is located in a secure cabinet located under the bridge on one of the two abutments. It is shown in Figure 6. Also shown is the cable enclosure leading into the hatchway closest to the cabinet. It was necessary to drill holes internally for the wires through both webs and through the transverse beams at the interior supports. Access to each of the 15 interior spaces required use of a ladder placed under the bridge where ongoing traffic would not be a problem. All sensors were installed in the box girder interiors. Installation of one of the temperature gages, placed in a hole drilled into the box girder, is

shown in Figure 7. The monitoring system installation took approximately a week. CTL provided assistance during the installation.

Figure 6 - Enclosure for System Control and Cable Conduit for Post-Tensioned Box Girder Bridge

Figure 7 – Installation of Temperature Sensor on Post-Tensioned Box Girder Bridge

An initial problem with the system was that the control cabinet regularly overheated. Following installation, three additional temperature sensors were added, one

for the ambient air temperature inside the control cabinet, one to measure the temperature inside one of the boxes and one to measure the temperature under the bridge. The temperature inside the control cabinet was over 100 degrees Fahrenheit at times, well outside the range of the electronics inside the cabinet. As a result, an air-conditioning unit was installed in the cabinet, and this solved the overheating problem.

When the system came online, it was found that one of the strain gages was not working properly. A new gage was installed, but in the process some other strain gages began to have serious problems. After additional efforts, it was decided that this problem would need to be reviewed after the rest of the system was operational. Further study has attributed the problem to the control panels. However, review of the data combined with an analysis raised questions on the usefulness of the strain gage data. This would only record the live load strains, and based on a study of the traffic and the fact that a vehicle load is small compared to the overall strains, it was determined that the strain information would not be useful in the long run. As a result, efforts to get the strain component of the monitoring system working were discontinued. When all installations (other bridges) have been completed, this system will be reviewed for possible modification.

There have been problems with 2 of the 16 accelerometers. The 14 operating accelerometers provide sufficient information for current monitoring efforts, and as with the strain gages, it was decided to postpone replacements until such time as it is determined to modify the system. The other 14 accelerometers, temperature sensors and tilt meters have performed well over the first 7 years of operation.

Lengyel [9] has described in detail the use of the software supplied with the monitoring system, with guidelines on working with the extensive data generated by the monitoring system. The temperature and tilt data are collected at intervals that can be set remotely, and acceleration data are collected using a trigger. When the acceleration magnitude exceeds a specified level (associated with a large truck), data are saved for the period prior to and following the passage of the vehicle. This is then processed into the frequency domain. Software has been developed to collect natural frequencies and acceleration levels, which are then used to develop the modal information. Lengyel and DeWolf developed an approach using histograms obtained from frequency domain plots that has validated a total of 7 natural frequencies [10].

Monitoring data have been used to study overall structural behavior and to explain the initial causes of cracking. Fu and DeWolf [11] developed an extensive finite element model using the data to determine how temperature influences behavior. It was necessary to calibrate the model using acceleration data to account for partially restrained bearings at the ends of the bridge. The cracking in the interior support columns and box girders were determined to be a result of differential temperatures caused by sunlight and not due to live loads. Liu and DeWolf [12] have used the data to determine how changes in temperature influence the modal information. There is a decrease in natural frequencies with increasing temperature. This information has been used to establish a

basis for the long-term structural health monitoring of this bridge.

**Post-Tensioned Segmental Box Girder Bridge**

The second monitoring system in the network was installed on a large multi-span, post-tensioned, segmental box-girder bridge. The bridge (NBI # 06200A) is part of I-95, and it crosses the Connecticut River. An aerial view is shown in Figure 8, and an elevation is shown in Figure 9. There are two separate bridges, one in the east direction (I-95 N) and one in the west direction (I-95 S). The lower one in Figure 8, in the east direction, is the one with the monitoring system. The sun shines directly on the bridge's south side, and thus this span receives the greatest effect from differential temperatures resulting from the sun.

Figure 8 – Aerial View of Post-Tensioned Segmental Box Girder Bridge

Figure 9 – Elevation of Post-Tensioned Segmental Box Girder Bridge

A typical cross-section of this 11-span bridge is shown in Figure 10. This bridge was selected for long-term monitoring because it is the largest box-girder bridge in Connecticut and because it had experienced significant cracking following completion. As a result, designers of the bridge recommended the monitoring of concrete temperatures to evaluate how differential temperatures influence overall structural behavior.

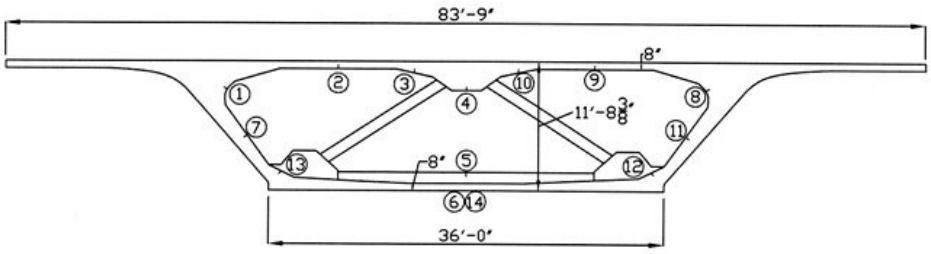


Figure 10 – Cross-Section of Post-Tensioned Segmental Box Girder Bridge

The monitoring system was designed to have a total of 16 temperature sensors.

Fourteen of the sensors are embedded in the box-girders, all on the inside and all in one of the interior spans. The cross-sectional location of these 14 sensors is shown in Figure 10. The remaining two sensors are used to record the air temperature inside the box-girder bridge and the temperature in the instrument cabinet.

The experience gained from the design, purchase and installation of the first monitoring system was used to develop this temperature system in house [9]. The same control system and software were used in this system, and thus it was not necessary to have an outside company supply a turn-key system, resulting in a significant reduction in the total cost.

The system installation took most of a week. The temperature sensors used to measure the box girder temperatures are all installed on the inside of the box girder. Figure 11 shows the interior of the girder. The system has been fully operational since September, 1999.

Figure 11 – Interior of Post-Tensioned Segmental Box Girder Bridge

As with other systems in the project, the data are collected at an interval that can be set remotely from the University of Connecticut. The interval is typically 30 minutes. A study of the data over the multi-year period has shown that the daily temperature variations are larger in the summer than in the winter. Typically, the temperatures recorded in the top temperature sensors are higher than those recorded in the others. Due to the effects of thermal mass, there is a 10 to 12 hour lag between the maximum temperature recorded in the box-girder and the ambient air temperature.

Of particular interest are the temperature differences, both across the bridge and through the depth [13, 14]. The horizontal temperature differences in this bridge, which spans in the east-west direction, are typically less than 2 °F. However, the vertical temperature differences are much greater. In the winter this vertical temperature difference ranges from about 1 °F to 5 °F, and in the summer it ranges from about 9 °F to 13 °F. The maximum vertical difference recorded has been 15 °F. The stress distribution due to the vertical temperature gradient has been compared to design estimates. Allowing for both free expansion and full restraint in the longitudinal directions, the stresses were typically within those allowed by the design specification. The stresses would not lead to damage, and the conclusion is that the cracking that occurred during the first few years was due to initial settlement at the supports and to other movements following construction.

**Steel Box Girder Bridge**

This is a multi-span, curved, continuous, double steel box-girder bridge with a composite deck. The bridge (NBI # 05868) is part of the interchange between I-84 and I-91 in Hartford, Connecticut. An aerial view of the bridge is shown in Figure 12. The connection between the spans at pier 3 and 6 is simply supported. The segment between pier 3 and 6 is continuous and includes the two spans with the monitoring system, which has been placed between piers 3 and 5.

Figure 12 – Aerial View of Steel Box Girder Bridge

The bridge is supported by tall circular steel-reinforced concrete columns. The supporting column at pier 3 is shown in Figure 13. Prior to installation of the monitoring system, inspection had noted that there were substantial cracks in the interior support columns.

Figure 13 – Support at Pier 3 for Steel Box Girder Bridge

The bridge plan and cross-sections are shown in Figures 14 and 15. The bridge has been monitored with 8 temperature sensors, 6 tilt meters and 8 accelerometers, located in the outer box section, as shown in Figures 14 and 15. The monitoring system was designed in-house, following the same approach used in the previous two systems. Installation took approximately 2 weeks. Monitoring began in the summer of 2001.

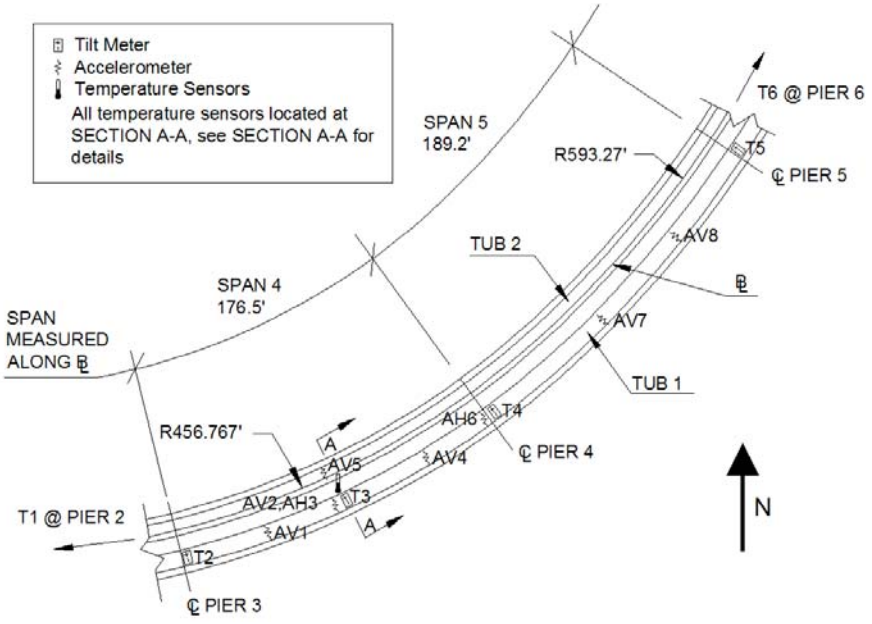


Figure 14: Plan view of Steel Box Girder Bridge

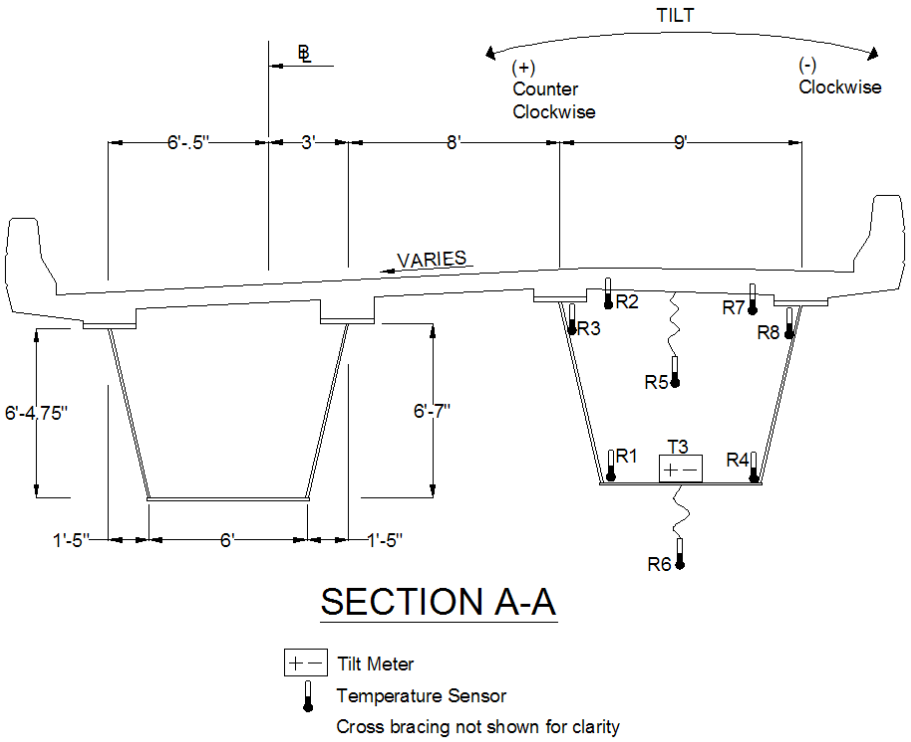


Figure 15: Typical Cross-Section of Steel Box Girder Bridge

Data collection is similar to that for the first bridge, with temperature and tilt data collected at intervals and accelerations collected using the trigger-based approach so that only data representative of large trucks is saved. Virkler and DeWolf [15] used the field data along with an extensive finite element model to evaluate the global deformations. Of particular interest was the determination of the cause of cracking in the columns. They evaluated both the longitudinal deformations and those due to differential temperatures over the cross-section. They concluded that the cause of the column cracking is due to longitudinal temperature variations over time. Temperature increases create longitudinal forces as a result of the constraints at piers 3 and 6. This leads to changes in the horizontal curvature. This in turn causes transverse displacements that place the tall column in bending.

**Steel Multi-Girder Bridge**

The monitoring system on this bridge (NBI # 03078) is the newest in the project. The bridge is a three-span, simply supported, steel multi-girder bridge. An aerial view of the bridge is shown in Figure 16. The monitored bridge is located on I-91 south of the Hartford area. The bridge carries three lanes of traffic over a river in the southbound direction. It is shown as the lower highway in Figure 16. The bridge was selected for monitoring because it is typical of many bridges in the state and because it is on the interstate and thus subject to heavy traffic loading.

Figure 16 – Aerial View of Steel Multi-Girder Bridge

The bridge elevation is shown in Figure 17. The monitoring system was designed to have 20 strain gages for live load monitoring, with 16 gages at the center of the end span entered by the traffic and 4 gages located close to the interior support in this span shown in Figure 18. These four were used to check for continuity at the interior support.

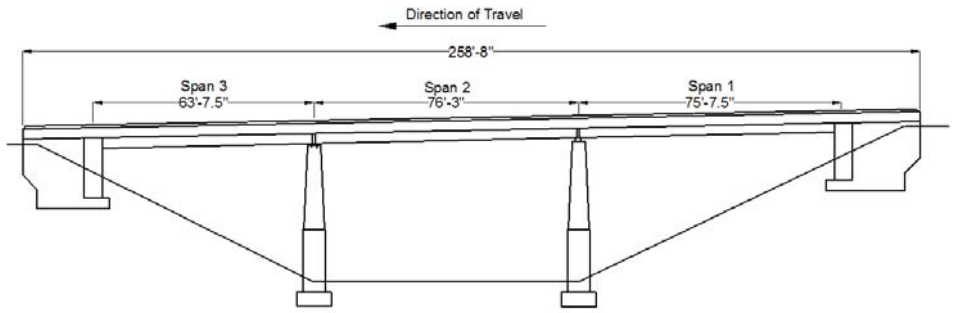


Figure 17 - Elevation of Steel Multi-Girder Bridge

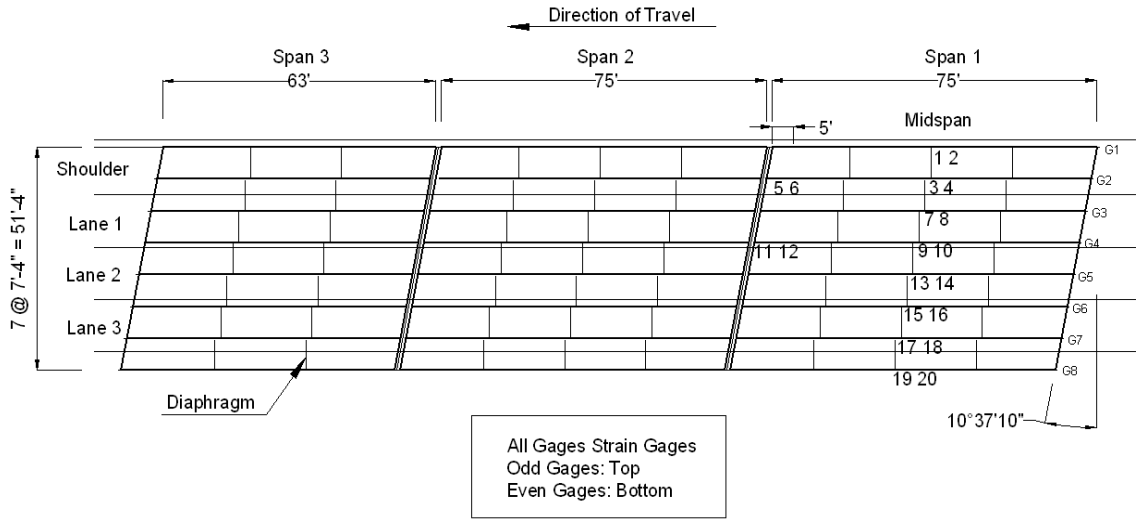


Figure 18 –Location of Sensors on Steel Multi-Girder Bridge.

The monitoring system was procured as a turnkey package, including both the operating system and the resistant strain gages, supplied by Vishay Micro-Measurements. The gages are general purpose, spot-weldable gages. An elevation of the bridge is shown in Figure 19. This photo was taken during the installation of the system using a snooper for access. It was necessary to remove lead paint at the gage locations, and this procedure followed OHSA Standards for lead paint removal. A view from underneath, showing the equipment cabinet located at the abutment, is shown in Figure 20. Installation took approximately one week.

Figure 19 – Installation of Strain Gages on Steel Multi-Girder Bridge

Figure 20 – Monitoring Cabinet for Steel Multi-Girder Bridge

All of the gages are located at the top and bottom of the steel girder webs in this composite bridge. Data are collected continuously. Typically, a trigger is used so that data saved are for truck traffic only. Monitoring began in November, 2004.

Initial monitoring data have been used to determine load histories, the distribution

of the loads to the eight girders, and the effect of the composite action [16, 17]. Analysis has shown that live load stresses are smaller than those used in the design process. Part of the reason for this is that vehicle loads are distributed to more girders than assumed during the design. The bridge is fully composite. Data are currently being used to establish information on the volume of truck traffic, along with truck weights. A finite element analysis has also been developed for additional evaluation of structural behavior.

Currently, data sets are being evaluated to check the feasibility of using the monitoring system as a Bridge-Weigh-in-Motion system. As part of this process, 4 strain gages located near the interior support have been moved to the middle of the middle span. This should more readily provide information on the speed of the trucks, in addition to providing total truck weights.

**Additional Monitoring Systems**

A fifth monitoring system has been installed on a multi-girder bridge (NBI # 00636) that is similar to the previous steel multi-girder bridge. The bridge was selected because it was expected to have large mobile cranes crossing it frequently. Vibrating wire strain gages were specified. At this time, this system has not been functioning as expected. The vibrating wire gages do not respond sufficiently to live loads, and there appear to be far fewer large vehicles than expected. At this time, plans are being developed to move the system to another bridge.

Additional Planned Monitoring Systems – Five additional monitoring systems have been designed and are in different stages of development and acquisition. These are:

1. Precast Prestressed Multi-Girder Bridge – Bridge No. 4470is in Avon (Old Farms Road) and it will have embeddable strain gages that will be installed prior to casting of the girders. The design for this bridge utilizes a new design configuration for prestressed concrete and is referred to as a New England Bulb Tee (NEBT).

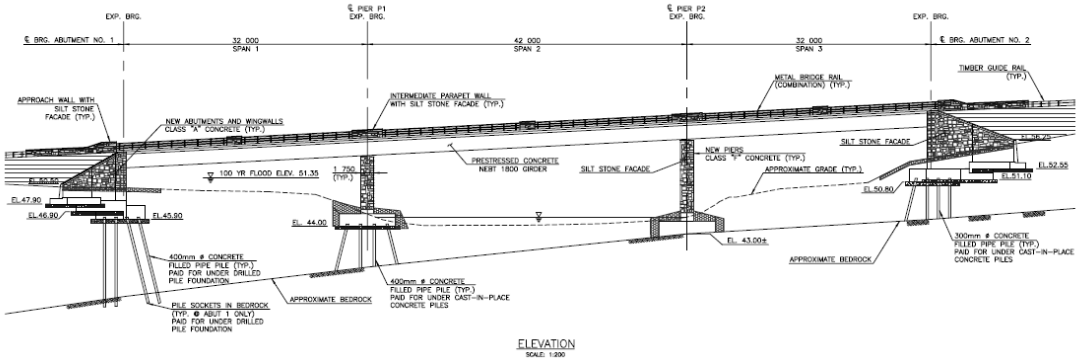


Figure 21 - Elevation of Concrete Multi-Girder Bridge (NEBT)

2. Multi-Steel-Plate Girder Bridge – This is the new Sikorsky Bridge (Bridge No. 761) located on the Merritt Parkway. It is a long multi-span bridge located on one of the State's major highway that is currently in construction. The monitoring system will have accelerometers and strain gages. It will also have displacement gages to monitor the longitudinal deformations at the superstructures ends. The system is being supplied by CTL, Illinois.

Figure 22 – Multi-Steel-Plate Girder Bridge

3. Large Multi-Span Steel Truss Bridge with Central Hung Trusses – This is the longest bridge in the State, and the monitoring system has been designed to evaluate the hangers for one of the central hung spans. The monitoring system uses both accelerometers and strain gages. The distance between the system control cabinet and the hung span is large, and stringing wires over this span would be difficult. As a result, the monitoring system has been designed with wireless sensors. In addition, the monitored area is not readily accessible for routine maintenance, including replacing batteries in the wireless sensors. As a result, researchers have worked with MicroStrain, Williston, Vermont, to design and develop a wireless system in which the battery for each sensor is recharged with solar panels. The system is currently being installed on the bridge.

Figure 23 - Large Multi-Span Steel Truss Bridge with Central Hung Trusses

4. Extradosed Bridge – The State of Connecticut is working on the design and installation of a large extradosed bridge in the I-95 corridor. Construction is expected to start in the near future. A large monitoring system has been under design for this bridge. As planned, it will have accelerometers, temperature sensors, strain gages and GPS sensors.

Figure 24 – Extradosed Bridge

5. Old Truss Swing Bridge – This bridge dates from the 1920s and is the largest moveable bridge in the state. The bridge has previously been monitored on a short-term basis to evaluate the central support system and some of the major truss members. The planned monitoring system will be designed to provide additional information on the long-term performance of this bridge and to provide indications if further problems are developing.

Figure 25 – Old Truss Swing Bridge

# Chapter 3

## Conclusions

This long term research project was developed to learn how bridge monitoring systems can be used in the evaluation of the in-service behavior, provide information that can be used for the long-term structural health monitoring of each bridge, and to assist the Connecticut Department of Transportation in their management of the State's bridge infrastructure.

Some of the major accomplishments from the four fully working bridge monitoring systems that have been operating over multi-year periods are:

- The project has shown the viability of placing monitoring systems on a bridge for multi-year monitoring; the systems have been based on sensors that have been routinely used for short-term studies.

- The extensive data have been used to characterize each bridge, providing additional information on how bridges behave.

- The field data have been used to calibrate finite element models, which have then been used to better define the bridge's behavior.

- In three of the four bridges, field data in combination with finite element models, have been used to show how deformations resulting from temperature changes, either over the daily cycle or due to differentials over the cross-section, have led to cracking in either the bridge or supporting columns.

- Techniques have been developed for reducing the extensive data collected from continuously operating monitoring systems to data that both characterizes the bridge behavior and are in a form that can be used for long-term evaluation.

Data from the four bridges are being used currently to provide a basis for long-term structural health monitoring. This builds on previous work at the University of Connecticut. Mazurek and DeWolf [18], based on model studies, demonstrated the possibility of using bridge field data to indicate major changes in structural integrity. Zhao, Ivan and DeWolf [19] and Zhao and DeWolf [20, 21] explored the use of accelerations for structural health monitoring, using different numerical techniques. Fu and DeWolf [22] demonstrated that accelerations can be used to determine relatively small changes in structural integrity in bridge bearings, indicating the feasibility of using accelerations for structural health monitoring. In a field study, Lauzon and DeWolf [23] demonstrated that the acceleration information collected from a bridge with a crack can

show clearly when there have been changes in the structural integrity. These studies are being used to set up structural health models for each of the four bridges in this study.

The project has supported a number of graduate students, both at the M.S. level and at the Ph.D. level. A list of publications based on the project and theses from the students is given in Appendix A.

## References


1. DeWolf, J.T., Culmo, M.P. and Lauzon, R.G. (1998). "Connecticut's Bridge Infrastructure Monitoring Program for Assessment," J. Infrastructure Systems, ASCE, 4(2): 86-90.

2. R.G. Lauzon and J.T. DeWolf. 2003. Connecticut's Bridge Monitoring Program – Making Important Connections Last. TR News, January/February No. 24:46-47.

3. R. Sartor, M.P. Culmo and J.T. DeWolf. 1999. Short Term Strain Monitoring of Bridge Structures. Journal Bridge Engineering, American Society of Civil Engineers, Vol. 4, No. 3:157-164.

4. J.W. Kou and J.T. DeWolf. 1997. Vibrational Behavior of Continuous Span Highway Bridge - Influencing Variables. Journal Structural Division, American Society of Civil Engineers, Vol. 123, No. 3:333-344.

5. J.T. DeWolf, P.E. Conn and P.N. O'Leary. 1995. Continuous Monitoring of Bridge Structures. International Association for Bridge and Structural Engineering Symposium: Extending the Lifespan of Structures, San Francisco, CA, pp. 935-940.

6. R.G. Lauzon and J.T. DeWolf. 1995. "Nondestructive Evaluation with Vibrational Analysis." Nondestructive Testing Methods for Civil Infrastructure, American Society of Civil Engineers, pp 17-30.

7. University of Connecticut. 1994. "Guidelines for Bridge Monitoring."

8. "Technical Service and Equipment Specification Manual for the High Speed Automatic Data Acquisition System at I-384 Westbound Grande Separation Structure over I-84 East Hartford, CT, Construction Technology Laboratories, Inc., Skokie, IL.

9. T. F. Lengyel. 2001. "Development of a Continuous Structural Monitoring System for Connecticut's Bridges." M.S. Thesis, University of Connecticut, Storrs, CT.

10. T.F. Lengyel and J.T. DeWolf. 2003. "Development and Implementation of a Continuous Monitoring System on a Concrete Box Girder Bridge in Connecticut." Proceedings of the 4th International Workshop on Structural Health Monitoring, Stanford University, Stanford, CA, pp. 262-269.

11. Fu, Y. and J.T. DeWolf. 2004. "Effect of Differential Temperature on a Curved Post-Tensioned Concrete Bridge," *Advances in Structural Engineering*, Vol. 7, No. 4, pp. 385-397.

12. Liu, C. and DeWolf, J.T. 2006. "Effect of Temperature on Modal Variability for a Curved Concrete Bridge," *Proceedings of SPIE – The International Society for Optical Engineering*. Vol. 6174.

13. Mondal, P. and J.T. DeWolf. 2004. "Long-Term Monitoring of Temperatures in a Segmental Concrete Box-Girder Bridge in Connecticut," in *Structural Materials Technology VI, An NDT Conference*. Buffalo, New York, USA, September 2004, pp. 113-120.

14. P. Mondal and J.T. DeWolf. 2006. Development of Computer-Based System for the Temperature Monitoring of a Post-Tensioned Segmental Concrete Box-Girder Bridge. Computer-Aided Civil and Infrastructure Engineering, Vol. 21:612-624.

15. Virkler, C. and DeWolf, J.T. 2005. "Development and Implementation of a Nondestructive Monitoring System on a Composite Steel Box-Girder Bridge in Connecticut," *Proceedings of SPIE – The International Society for Optical Engineering*. Vol. 5765, pp. 960-969.

16. Chakraborty, S. and J.T. DeWolf. 2005. "Development and Implementation of a Continuous Monitoring System on a Multi-Girder Composite Steel Bridge in Connecticut" in *Proceedings of the Fourth International Workshop on Structural Health Monitoring*, Stanford, California, USA.

17. S. Chakraborty and J.T. DeWolf. 2006. Development and Implementation of a Continuous Strain Monitoring System on a Multi-Girder Composite Steel Bridge. Journal of Bridge Engineering, American Society of Civil Engineers (in press).

18. D. Mazurek and J.T. DeWolf. 1990. Experimental Study of a Bridge Monitoring Technique. Journal of Structural Division, American Society of Civil Engineers, Vol. 116, No.:2532-2549.

19. J. Zhao, J. Ivan and J.T. DeWolf. 1998. Structural Damage Detection Using Artificial Neural Networks. Journal of Structural Division, American Society of Civil Engineers, Vol. 124, No.3:93-101.

20. J. Zhao and J.T. DeWolf. 1999. Sensitivity Study for Vibrational Parameters Used in Damage Detection. Journal of Structural Division, American Society of Civil Engineers, Vol. 125 No.4:410-416.

21. J. Zhao and J.T. DeWolf. 2002. Dynamic Monitoring of Steel Girder Highway Bridge. Journal of Bridge Engineering, American Society of Civil Engineers, Vol. 7, No.6:350-356.
22. Y. Fu and J.T. DeWolf. 2001. Monitoring and Analysis of a bridge with Partially Restrained Bearings. 2001. Journal of Bridge Engineering, American Society of Civil Engineers, Vol. 6, No. 1:23-29.

23. R. G. Lauzon and J.T. DeWolf. 2006. Ambient Vibration Monitoring of a Highway Bridge Undergoing a Destructive Test. Journal of Bridge Engineering, American Society of Civil Engineers. Vol. 11, No. 5:1-9

## Appendix A – Publications Developed from this Research

The following publications have been based and related to research conducted during this project and on the theses of graduate students working on the project:


A-1 J.T. DeWolf, M.P. Culmo and R.G. Lauzon. 1998. "Connecticut's Bridge Infrastructure Monitoring Program for Assessment," Journal Infrastructure Systems, American Society of Civil Engineering, Vol. 4, No. 2:86-90.

A-2 J. Zhao, J.N. Ivan and J.T. DeWolf. 1998. "Structural Damage Detection Using Artificial Neural Networks. Journal Infrastructure Systems," American Society of Civil Engineering, Vol. 4, No. 3:93-101.

A-3 R. Sartor, M.P. Culmo and J.T. DeWolf. 1999. "Short Term Strain Monitoring of Bridge Structures," Journal Bridge Engineering, American Society of Civil Engineers, Vol. 4, No. 3:157-164.

A-4 Fu, Y., and DeWolf, J. T. 2001. ''Monitoring and analysis of a bridge with partially restrained bearings,'' ASCE Journal of Bridge Engineering, Vol. 6, No. 1, pp. 23–29.

A-5 J. Yang and J.T. DeWolf. 2002 "Load Testing of a Deteriorated Concrete Box Girder Bridge," Advances in Structural Engineering, Vol. 5, No. 2:63-73.

A-6 J. Zhao and J.T. DeWolf. 2002. "Dynamic Monitoring of Steel Girder Highway Bridge," Journal of Bridge Engineering, American Society of Civil Engineers. Vol. 7, No. 6:350-356.

A-7 Y. Fu and J.T. DeWolf. 2004. "Effect of Differential Temperature on a Curved Post-Tensioned Concrete Bridge," Advances in Structural Engineering, Vol. 7, No. 4:183-195.

A-8 M.P. Culmo, J.T. DeWolf and M. R. DelGrego. 2004. "Behavior of Steel Bridges Under Superload Permit Vehicles," Transportation Research Record: Journal of the Transportation Research Board, No. 1892, TRB, National Research Council, Washington, D.C., pp. 107-114.

A-9 J.T. DeWolf, R.G. Lauzon and M.P. Culmo. 2002. "Monitoring Bridge Performance. Structural Health Monitoring Journal," Vol. 1, No. 2:129-138.

A-10 J.T. DeWolf and Y. Fu. 2003. "Experiences with Using Finite Element Analysis to Model Bridges," Workshop on Innovative Applications of Finite Element Modeling in Highway Structures, Federal Highway Administration, New York,

NY, 14 pages.

A-11 T.F. Lengyel and J.T. DeWolf. 2003. "Development and Implementation of a Continuous Monitoring System on a Concrete Box Girder Bridge in Connecticut," Proceedings of the 4th International Workshop on Structural Health Monitoring, Stanford University, Stanford, CA, pp. 262-269.

A-12 P. Mondal and J.T. DeWolf. 2004. "Long-Term Monitoring of Temperatures in a Segmental Concrete Box-Girder Bridge in Connecticut," Structural Materials Technology Conference, American Society of Nondestructive Testing, Buffalo, N.Y., 8 pages.

A-13 M.P. Culmo, J.T. DeWolf and M. R. DelGrego. 2004. "Behavior of Steel Bridges Under Superload Permit Vehicles," Transportation Research Record: Journal of the Transportation Research Board, No. 1892, TRB, National Research Council, Washington, D.C., pp. 107-114.

A-14 E.G. Feldblum, P.F. D'Attilio and J.T. DeWolf. 2005. "Strain Monitoring of Bridges During Paving Operations," Annual Meeting of Transportation Research Board, Washington, D.C. 19 pages.

A-15 C.D. Virkler and J.T. DeWolf. 2005. "Development and Implementation of a Nondestructive Monitoring System on a Composite Steel Box-Girder Bridge in Connecticut," Sensors and Smart Structures Technologies for Civil, Mechanical, and Aerospace Systems, SPIE Annual International Symposium on Smart Structures and Materials, San Diego, CA, 10 pages.

A-16 P. Mondal, J.T. DeWolf, P. D'Attilio and E. Feldblum. 2005. "Continuous Monitoring for the Management, Safety, and reliability of Connecticut's Bridge Infrastructure," Sixth International Bridge Engineering Conference, Boston, MA, published in Transportation Research Record: Journal of the Transportation Research Board CD 11-S, Transportation research Board of the National Academies, pp. 265-271.

A-17 S. Chakraborty and J.T. DeWolf. 2005. "Development and Implementation of a continuous Monitoring System on a Multi-Girder Composite Steel Bridge in Connecticut," Proceedings of the 5th International Workshop on Structural Health Monitoring, Stanford University, Stanford, CA.

A-18 C. Liu and J.T. DeWolf. 2006. "Effect of Temperature on Modal Variability for a Curved Concrete Bridge," Sensors and Smart Structures Technologies for Civil, Mechanical, and Aerospace Systems, SPIE Annual International Symposium on Smart Structures and Materials, San Diego, CA, 11 pages.

A-19 J.T. DeWolf, J.K. Olund, C. Liu and A.J. Cardini. 2006. The Long Term Structural Health Monitoring of Bridges in the State of Connecticut. Third European Workshop on Structural Health Monitoring, Granada, Spain.

A-20 J.K. Olund, J.T. DeWolf, P.F. D'Attilio, E.G. Feldblum. 2006 Evaluation of Long Term Behavior from Connecticut's Bridge Monitoring Network. 2006 NDE Conference on Civil Engineering, St. Louis, Missouri.

A-21 R.G. Lauzon and J.T. DeWolf. 2006 Ambient Vibration Monitoring of a Highway Bridge Undergoing a Destructive Test. Journal of Bridge Engineering, American Society of Civil Engineers. Vol. 11, No. 5:1-9.

A-22 S. Chakraborty and J.T. DeWolf. 2006. Development and Implementation of a Continuous Strain Monitoring System on a Multi-Girder Composite Steel Bridge. Journal of Bridge Engineering, American Society of Civil Engineers (in press).

A-23 P. Mondal and J.T. DeWolf. 2006. Development of Computer-Based System for the Temperature Monitoring of a Post-Tensioned Segmental Concrete Box-Girder Bridge. Computer-Aided Civil and Infrastructure Engineering, Vol. 22:65-77.

A-24 A.H. McDonnell, P.F. D'Attilio, and EG. Feldblum, J.T. DeWolf, A.J. Cardini, and J.K. Olund. 2006 "Use of Bridge Strain Health Monitoring System for Weigh-in-Motion Evaluation" Presentation at North American Travel Monitoring Exhibition & Conference, Minneapolis, Minnesota.