File-AID for IMS/ISPF

Reference Manual

Release 7.1

Please direct questions about File-AID for IMS
or comments on this document to:

File-AID for IMS Technical Support
Compuware Corporation
One Campus Martius
Detroit, MI 48226-5099
1-800-538-7822

Outside the USA and Canada, please contact
your local Compuware office or agent.

This document and the product referenced in it are subject to the following legends:

Copyright 1984-2005 Compuware Corporation. All rights reserved. Unpublished rights reserved under the Copyright Laws of the United States.

U.S. GOVERNMENT RIGHTS-Use, duplication, or disclosure by the U.S. Government is subject to restrictions as set forth in Compuware Corporation license agreement and as provided in DFARS 227.7202-1(a) and 227.7202-3(a) (1995), DFARS 252.227-7013(c)(1)(ii) (OCT 1988), FAR 12.212(a) (1995), FAR 52.227-19, or FAR 52.227-14 (ALT III), as applicable. Compuware Corporation.

This product contains confidential information and trade secrets of Compuware Corporation. Use, disclosure, or reproduction is prohibited without the prior express written permission of Compuware Corporation. Access is limited to authorized users. Use of this product is subject to the terms and conditions of the user's License Agreement with Compuware Corporation.

Abend-AID, Compuware, File-AID, and FrontLine are trademarks or registered trademarks of Compuware Corporation.

BookManager, CICS, DB2, IBM, IMS, and MVS/ESA are trademarks or registered trademarks of International Business Machines Corporation.

Adobe ® Acrobat ® Reader copyright © 1987-2005 Adobe Systems Incorporated. All rights reserved. Adobe and Acrobat are trademarks of Adobe Systems Incorporated.

All other company and product names are trademarks or registered trademarks of their respective owners.

Doc. CWFIRI7B
June 29, 2005.

Contents

Figures . . . . . **xiii**

Tables . . . . . **xix**

Introduction . . . . . **xxi**
What's in Each Chapter? xxi
Notation Rules xxi
Reading the Syntax Diagrams. xxii
Related Publications xxiii
FrontLine Support Website xxiii
Online Documentation xxiii
World Wide Web xxiv
Getting Help xxiv

Chapter 1. Overview **1-1**
System Requirements 1-1
Key Features 1-2
Invoking File-AID for IMS/ISPF 1-3
File-AID for IMS/ISPF Primary Options. 1-3
Access to Online Databases 1-4
PSB Generation 1-5
DL/I and BMP Processing (Dynamic PSB) 1-5
DL/I and BMP Processing (Static PSB) 1-6
ACB Processing (Dynamic PSB only) 1-6
Database Security 1-6
Terminating File-AID for IMS/ISPF. 1-7
Screen Format 1-10
Types of Screens. 1-11
Option Selection Screen 1-11
Dataset Specification Screen 1-11
Member List Screen 1-12
Scrollable Data Display 1-12
Unscrollable Data Display 1-13
Scrolling 1-13
Split Screen 1-15
Help Function 1-15
Command Entries 1-15
Primary Commands 1-15
Jump Commands 1-16
Line Commands 1-16
Terminal Keys 1-16
Program Access Keys 1-16
Program Function Keys 1-17
File-AID for IMS/ISPF Audit Trail Feature 1-17

Chapter 2. User Parameters **2-1**
Parameters Selection Menu 2-1
Select IMS Environment 2-2
System Parameters 2-3
Double-Byte Character Support 2-4
Formatted Data Presentation 2-5

Unformatted Data Presentation 2-5
Print Parameters 2-5
IMS Parameters 2-6
Dataset Concatenations 2-9
Administration 2-10
GLOBAL 2-11
Assemble IXPGLOBL 2-19
Environments. 2-21
Convert Existing IXPIPRMS Module 2-22
Review Existing IXPIPRMS and Create New IXPENV Module. 2-23
Select Environment 2-24
Modify Existing Environment Definition 2-26
Create New IXPENV Module 2-26
Using the Modify Environment Menu 2-27
Option 1 – IMS System Parameters 2-28
Option 2 – DL/I Parameters 2-31
Option 3 – BMP Parameters 2-34
Option 4 – ACB Parameters 2-36
Option 5 – Dataset Concatenations. 2-38
Assemble IXPENV 2-40
User Exits 2-42
Security Exit 2-43
Application Relationship Exits. 2-45
Segment Control Exit. 2-46
Training Files 2-49
Assemble IXPGLOBL 2-50
Parameters Summary Information 2-52

Chapter 3. Datasets 3-1
Dataset Concatenation Support 3-1
Viewing Concatenation Lists. 3-1
Special Considerations. 3-2
Troubleshooting. 3-2
File-AID for IMS/ISPF Datasets 3-2
Database Dataset 3-2
Database Description Dataset Concatenation. 3-3
DL/I Access Methods Supported 3-3
Segment Layout Dataset Concatenation 3-4
Segment/Layout XREF Dataset Concatenation 3-5
Extract TO/Load FROM File Dataset 3-6
Selection Criteria Dataset Concatenation 3-6
Application Relationship Dataset Concatenation. 3-6
ISPF Log and List Files Datasets 3-6
User Profile Dataset 3-6
IMS Required Datasets 3-7
IMS DD Concatenation 3-7
DFSRESLB DD Concatenation 3-8
TASKLIB/STEPLIB/MDALIB 3-8
DFSVSAMP DD 3-8
RECON DDs 3-8
Database DDs 3-9
IMS PROCLIB and DFSESL Concatenations 3-9
IEFRDER DD 3-9

Chapter 4. Browse/Edit 4-1
Browse/Edit Conversation Flow 4-1
Database Specification 4-2

DL/I Region 4-3
BMP Region 4-3
Database Location 4-3
Edit Formatted 4-3
Edit Unformatted 4-3
Edit Character 4-3
Edit Database Specification. 4-4
Dynamic PSB 4-4
Terminating the Screen 4-7
Member List Processing 4-8
Static PSB 4-9
Terminating the Screen 4-11
DBD Selection List for Static PSB 4-12
Terminating the Screen 4-14
Exclude Segment Specification 4-14
Terminating the Screen 4-15
Database Dataset Specification 4-15
Obtain DB Dataset Names From 4-17
Terminating the Screen 4-17
Edit Database Location 4-18
Selecting a Segment 4-19
Inserting a Segment 4-22
Edit Database Location Primary Commands 4-22
ZOOM 4-22
ZOOMH 4-23
Terminating the Screen 4-24
Common Edit Primary Commands 4-25
Edit Formatted Mode 4-26
Formatted Screen - Character Mode 4-26
Formatted Screen - Hex Mode. 4-33
Excluding Lines 4-34
Edit Formatted Primary Commands 4-35
GOB 4-36
GOF 4-36
GOH/GOT 4-36
GOL 4-36
GOM 4-36
HEX 4-37
MARK. 4-37
Bookmark Screen 4-38
ZOOM 4-41
ZOOMH 4-42
Notes on Formatted Mode 4-43
Edit Unformatted Mode 4-43
Unformatted Screen - Hex Mode. 4-43
Unformatted Screen - Character Mode 4-45
Edit Unformatted Primary Commands. 4-45
GOB, GOF, GOH/GOT, GOL, GOM. 4-45
MARK. 4-46
ZOOM 4-46
ZOOMH 4-46
Edit Character Mode 4-47
Character Screen - Character Mode 4-47
Character Screen - Hex Mode 4-48
Edit Character Primary Commands 4-49
Edit Character Line Commands 4-52

Key Specification 4-53
Key Specification Primary Commands 4-57
HEX 4-57
ZOOM. 4-57
ZOOMH 4-57
Key Specification Examples 4-57
Example 1. 4-57
Example 2 4-59
Example 3 4-61
Example 4 4-63
Secondary Indexing 4-65
Database Specification 4-66
Secondary Index Database List 4-67
Selecting a Secondary Index. 4-67
Terminating the Screen 4-68
Database Dataset Specification 4-68
Terminating the Screen 4-68
Database Location 4-69
Formatted Screen 4-69
Key Specification Screen 4-70
Inserting ORDR040 With a Segment Layout 4-71
Inserting ORDR040 With a Generic Layout 4-72
Secondary Index Special Considerations 4-73
Audit Trail Feature. 4-75
Audit Trail Dataset Usage 4-75
System SMF Log File Usage 4-75
Audit Trail Disposition 4-76
Terminating the Screen 4-77
Notes on the Audit Trail Feature 4-77
Optional IMS Functions 4-78
Logical Relationships 4-78
Virtual Logical Child Segments 4-79
Insert, Delete, and Replace Rules 4-79
Key Specification Screen. 4-80
Key-Only Segments 4-80
Repeat Command 4-81
Nonkeyed and Nonunique Segments 4-82
Variable Length Segments 4-83
Segment Edit/Compression Facility 4-84

Chapter 5. Utilities 5-1
Initialize Data Base Utility (Online Conversation) 5-1
Initialize Database - Database Specification 5-2
Terminating the Screen 5-3
Initialize Data Base Dataset Specification 5-3
Terminating the the Screen 5-4
Data Base Initialize Image Copy Specification 5-5
Initialize Data Base - JCL Specification Screen 5-6
Terminating the Screen 5-7
Editing the Generated JCL 5-7
Initialize Database Utility (Batch Stream) 5-8
Database Initialization Report 5-15

Chapter 6. Extract/Load 6-1
Database Extract Function (Online Conversation) 6-2
Data Base Extract - Data Base Specification 6-2
Dynamic PSB 6-3

Terminating the Screen 6-4
Static PSB 6-5
Terminating the Screen 6-7
Extract DBD Selection List for PSB (Static PSB Only) 6-7
Terminating the Screen 6-9
PCBs Used for Extract 6-9
Suggested PSB to be Used for Extract. 6-9
Data Base Extract - Option Specification 6-9
Terminating the Screen 6-11
XREF Selection List for Convert 6-12
Terminating the Screen 6-13
Display PCBs for Related DBDs Screen 6-13
Terminating the Screen 6-14
Data Base Dataset Specification 6-14
Terminating the Screen 6-16
Data Base Extract - JCL Specification 6-16
Terminating the Screen 6-18
Editing the Generated JCL. 6-18
Database Extract Function (Batch Stream) 6-19
Extract JCL Conversion 6-20
Extract File Contents 6-26
Database Load Function (Online Conversation) 6-28
Data Base Load - Dataset Specification 6-28
Dynamic PSB 6-29
Terminating the Screen 6-30
Static PSB 6-31
Terminating the Screen 6-32
Tape Input Application Relationship Screen. 6-33
Terminating the Screen 6-33
Load DBD Selection List for PSB (Static PSB Only) 6-33
Terminating the Screen 6-35
PCBs Used for the Load Function 6-36
Suggested PSB to be Used for Load 6-36
Display PCBs for Related DBDs 6-36
Terminating the Screen 6-37
DLI Log Usage 6-37
Terminating the Screen 6-39
Data Base Dataset Specification 6-39
Terminating the Screen 6-40
Data Base Load Image Copy Specification 6-41
Data Base Load - JCL Specification 6-42
Terminating the Screen 6-43
Editing the Generated JCL 6-43
Database Load Function (Batch Stream) 6-44
Advanced Topics. 6-54
Extract Processing Flow 6-54
Extract TO/Load FROM File 6-55
Header Record 6-55
DBD Record 6-56
Data Record 6-56
Extracting Roots With Nonunique Keys 6-58
Load Processing Flow 6-58
Sorting the Load From File 6-59
Loading Logically Related Paired Segments 6-59
Loading Segments With Nonunique Keys 6-60
Reorganizing Databases by Editing the Extract File 6-60

Changing Segment Data 6-60
Changing Segment Length 6-61
Adding or Deleting Segment Occurrences Without Changing the DBD 6-62
Changing the DBD 6-62
Comparing Data Bases 6-63
Extracting SDEP Segment Types From a DEDB Data Base 6-64
Converting a DEDB to an HDAM Data Base 6-64
Extracting and Loading a VSAM KSDS File 6-64
Database Extract Report 6-64
Data Base Dataset Summary 6-64
Primary Data Base Summary 6-65
Related Data Base Summary 6-65
Selection Criteria Summary 6-65
Relationship Criteria Summary 6-65
Segment Criteria Summary 6-65
Field Criteria Summary 6-66
Database Load Reports 6-69
Data Base Dataset Summary 6-69
Primary Data Base Summary 6-69
Related Data Base Summary 6-69

Chapter 7. Print 7-1
Print Audit Trail Screen (Online Conversation) 7-1
Terminating the Screen 7-3
Editing the Generated JCL 7-3
Retrieving Audit Trail from SMF 7-4
Print Audit Trail (Batch Stream) 7-4
Audit Trail Report 7-6
Formatted Report Contents 7-7
Hexadecimal Report Contents 7-8
Summary Information 7-9

Chapter 8. Selection Criteria 8-1
Selection Criteria Specification 8-1
Terminating the Screen 8-4
Error Summary 8-4
Terminating the Screen 8-5
Selection Criteria Menu 8-6
Common Primary Commands 8-7
Segment Criteria 8-7
Segment Criteria Segment List 8-8
Terminating the Screen 8-9
Segment Criteria Screen 8-9
Terminating the Screen 8-11
Field Criteria 8-12
Field Criteria Set List 8-13
Terminating the Screen 8-14
Field Criteria Segment List 8-15
Terminating the Screen 8-16
Field Criteria List 8-16
Terminating the Screen 8-18
Select Record Type Value 8-18
Terminating the Screen 8-19
Other Record Type Value Specification Screen 8-19
Terminating the screen 8-20
Multiple Record Type Value Primary Commands 8-20

Formatted Criteria Screen 8-21
Extract with Keys from Input File 8-23
Unformatted Criteria Screen 8-23
Extract with Keys from Input File 8-25
Formatted/Unformatted Field Criteria Primary Commands. 8-26
Direct Access Processing 8-26
HIDAM, HISAM, SHISAM, and MSDB 8-27
HDAM and DEDB 8-28
HSAM and SHSAM. 8-28
Relationship Criteria. 8-28
Relationship Specification. 8-29
Terminating the Screen 8-29
Relationship Criteria 8-29
Limiting Target Data Bases 8-31
Selection Criteria Examples. 8-33
Example 1 8-33
Example 2 8-35
Example 3 8-38

Chapter 9. Segment/Layout Cross-Reference 9-1
Segment/Layout XREF Dataset Specification 9-1
Terminating the Screen 9-2
EDIT XREF Segment List 9-2
Primary Commands 9-4
Segment/Layout Cross-Reference Examples 9-4
Adding a DBD to an XREF 9-4
Maintaining a DBD in an XREF 9-6
Terminating the Screen 9-7
Logical Child Segment 9-8
Terminating the Screen 9-9
Concatenated Segment 9-10
Terminating the Screen 9-11
Edit Record Type 1 Entries 9-12
Hexadecimal Format 9-13
Edit Record Type 2 Screen 9-14
Hexadecimal Format 9-16
Terminating the Screen 9-16

Chapter 10. Application Relationships 10-1
Application Relationship Dataset Specification 10-1
Terminating the Screen 10-2
Error Summary 10-2
Terminating the Screen 10-3
Application Relationship Segment List 10-3
Terminating the Screen 10-5
Primary Commands 10-5
Target DBD Specification 10-5
Source Segment Exit Module 10-6
Example of Creating an Application Relationship 10-8
Terminating the Screen 10-9

Chapter 11. Primary Commands 11-1
ADM 11-1
CANCEL (Edit only) 11-1
*CAPS 11-2
CHANGE and RCHANGE 11-2
Adjusting Length of Strings 11-3

Asterisk (*) Operand 11-3
INVALID Operand 11-4
ANY Operand 11-4
SEGMENT Operand 11-4
Controlling Starting Point and Extent of Change 11-4
FIND/CHANGE Message Screen 11-5
Controlling the Range of Change 11-5
Limiting the Search 11-6
Column Boundaries 11-6
Data-Name Boundary 11-6
Repeat Change (RCHANGE) 11-7
CHANGE Command Screen 11-7
CHAR 11-9
CHILD 11-9
COBOL 11-10
*CURSOR 11-11
DBCS 11-11
DELETE (Edit only) 11-11
DOWN 11-11
DSN 11-12
EBCDIC 11-12
*END 11-12
ENV 11-13
EXCLUDE (Edit Formatted only) 11-13
FIELD 11-13
FIND and RFIND 11-13
Repeat Find (RFIND) 11-14
FIND Command Screen 11-14
FORMAT 11-16
FPRINT 11-16
GOB 11-19
GOF 11-19
GOH/GOT 11-19
GOL 11-19
GOM 11-19
*HELP 11-20
*HEX 11-20
HIERARCHY 11-20
DBD/Segment Information 11-21
Terminating the Screen 11-23
Logical Relationship Information 11-23
Terminating the Screen 11-24
Segment Information Screen 11-24
Terminating the Screen 11-25
Field Information Screen 11-25
IMS 11-26
INFO 11-27
INSERT (Edit only) 11-27
Inserting a Single Record Type Segment (Unformatted Mode) 11-29
Inserting a Multiple Record Type Segment (Unformatted Mode) 11-29
Adding DBDs to Segment/Layout XREF 11-30
JCL 11-30
KEY 11-30
*KEYS 11-31
*LEFT 11-31
LOCATE 11-33

MARK 11-33
MIXED 11-34
NEXT 11-34
*PANELID 11-34
PARENT 11-34
*PFSHOW 11-35
PLI 11-35
*PRINT 11-35
*PRINT-HI 11-36
*PRINTL 11-36
*PRINTLHI 11-36
PRT 11-36
RCHANGE 11-36
RECOVERY (Edit only) 11-36
REFRESH (Edit only) 11-37
RELATIONSHIP 11-37
REPEAT (Edit only) 11-37
*RESET 11-38
RESTORE 11-38
*RETRIEVE 11-38
*RETURN 11-39
RFIND 11-39
RIGHT 11-39
ROOT 11-39
SAVE 11-40
SEGMENT 11-40
*SELECT 11-40
SORT 11-41
SPLIT 11-41
*SWAP 11-41
SYS. 11-41
*TSO 11-41
TWIN 11-42
UNFORMAT 11-43
*UP 11-43
VIEW 11-43
XPSB 11-45
ZOOM 11-45
ZOOMH 11-45

Chapter 12. Line Commands 12-1
C (Copy) 12-1
D (Delete) 12-1
I (Insert) 12-2
K (Key) 12-3
KC (Key - Character mode) 12-3
KU (Key - Unformatted mode) 12-3
MK (Mark - Character mode) 12-3
R (Rename) 12-3
R (Repeat) 12-4
RA (Repeat All) 12-4
S (Select) 12-5
SC (Select - Character mode) 12-5
SU (Select Unformatted) 12-5
V (View) 12-6
X (Exclude) 12-7

Chapter 13. Tutorial **13-1**

Glossary **G-1**

Index **I-1**

Figures

1-1. Primary Option Menu 1-3
1-2. Error Display Screen - Unrecoverable Error 1-8
1-3. Error Display Screen - Abnormal Termination 1-8
1-4. Error Display Screen - Control Program Abend 1-9
1-5. Error Display Screen - Control Program Abend 1-10
1-6. EDIT - Data Base Specification Screen 1-11
1-7. Segment/Layout XREF Member List Screen 1-12
1-8. EDIT - Formatted Screen 1-13
1-9. EDIT XREF - Logical Child Screen 1-13
2-1. Parameters Selection Menu 2-1
2-2. Select IMS Environment Screen 2-2
2-3. System Parameters Screen 2-3
2-4. Print Parameters Screen 2-5
2-5. IMS Parameters Screen 2-6
2-6. View Dataset Concatenations Screen 2-9
2-7. File-AID for IMS – Administration Menu 2-11
2-8. File-AID for IMS – Modify IXPGLOBL Screen, Part 1 2-12
2-9. File-AID for IMS – Modify IXPGLOBL Screen, Part 2 2-12
2-10. File-AID for IMS – Modify IXPGLOBL Screen, Part 3 2-13
2-11. File-AID for IMS – Modify IXPGLOBL Screen, Part 4 2-13
2-12. File-AID for IMS – Modify IXPGLOBL Screen, Part 5 2-14
2-13. File-AID for IMS – Modify IXPGLOBL Screen, Part 6 2-14
2-14. File-AID for IMS – Modify IXPGLOBL Screen, Part 7 2-15
2-15. File-AID for IMS – Assemble IXPGLOBL Screen 2-19
2-16. File-AID for IMS – ADMIN Information Panel 2-21
2-17. File-AID for IMS – Environment Definition Menu 2-21
2-18. File-AID for IMS – Convert IXPIPRMS Screen 2-22
2-19. File-AID for IMS – Review IXPIPRMS 2-24
2-20. File-AID for IMS – Select Environment Screen 2-25
2-21. File-AID for IMS – Create IXPENV Screen 2-27
2-22. File-AID for IMS – Modify Environment Menu 2-28
2-23. File-AID for IMS – Modify System Parameters, Part 1 2-29
2-24. File-AID for IMS – Modify System Parameters, Part 2 2-29
2-25. File-AID for IMS – Modify DLI Parameters Screen, Part 1 2-32
2-26. File-AID for IMS – Modify DLI Parameters Screen, Part 2 2-32
2-27. File-AID for IMS – Modify BMP Parameters, Part 1 2-34
2-28. File-AID for IMS – Modify BMP Parameters, Part 2 2-35
2-29. File-AID for IMS – Modify ACB Parameters Screen 2-37
2-30. File-AID for IMS – Dataset Concatenation Screen 2-38
2-31. File-AID for IMS – Assemble IXPENV 2-41
2-32. File-AID for IMS – ADMIN Information Panel 2-42
2-33. File-AID for IMS – Copy/Modify User Exits Menu 2-42
2-34. File-AID for IMS – Security Exit Option Menu 2-43
2-35. File-AID for IMS – Copy Sample Security Exit Screen 2-44
2-36. File-AID for IMS – Compile Security Exit Screen 2-44
2-37. File-AID for IMS – Restore Inactive Security Exit Screen 2-45
2-38. File-AID for IMS – Application Relationship Exit Menu 2-45
2-39. File-AID for IMS – Copy Sample Appl. Relationship Exit Screen 2-46
2-40. File-AID for IMS – Compile Application Relationship Exit 2-46
2-41. File-AID for IMS – Segment Control Exit Menu 2-47
2-42. File-AID for IMS – Copy Sample Segment Control Exit Table Screen 2-47
2-43. File-AID for IMS – Compile Segment Control Exit Table Screen 2-48
2-44. File-AID for IMS – Copy Sample Segment Control Exit Screen 2-48
2-45. File-AID for IMS – Compile Segment Control Exit Screen 2-49
2-46. File-AID for IMS – Training Files Screen 2-50
2-47. File-AID for IMS – Assemble IXPGLOBL Screen 2-51

2-48. Parameters Summary Information Screen, Part 1 2-52
2-49. Parameters Summary Information Screen, Part 2 2-53
2-50. Parameters Summary Information Screen, Part 3 2-53
2-51. Parameters Summary Information, Part 4....2-54
2-52. Parameters Summary Information Screen, Part 5 2-54
2-53. Parameters Summary Information, Part 6....2-55
2-54. Parameters Summary Information, Part 7....2-55
3-1. Job #1 JCL - Copy File-AID for IMS Log Dataset to Tape 3-10
3-2. Job #2 JCL - Generate PSB for Backout Job 3-11
3-3. Job #3 JCL - Execute IMS Backout Utility....3-12
4-1. Browse/Edit Conversation Flow 4-2
4-2. Edit - Data Base Specification Screen (Dynamic PSB) 4-4
4-3. Member List Screen 4-8
4-4. Edit - Data Base Specification Screen (Static PSB) 4-9
4-5. DBD Selection List for Static PSB Screen 4-12
4-6. EDIT – Exclude Segment Specification Screen 4-14
4-7. EDIT – Data Base Dataset Specification Screen 4-16
4-8. EDIT - Data Base Location Screen....4-18
4-9. EDIT - Data Base Location Screen - Selecting a New Segment....4-19
4-10. EDIT - Data Base Location Screen - Leaving Key Field Blank....4-21
4-11. Edit - Data Base Location Screen - Saved Key Values 4-22
4-12. Zoom Edit Panel 4-23
4-13. Zoomh Edit Panel 4-24
4-14. Formatted Screen - Character Mode....4-26
4-15. Formatted Screen - Invalid Character Beyond Position 30 4-29
4-16. Formatted Screen - Hex Mode 4-33
4-17. Excluding Lines - Before 4-35
4-18. Excluding Lines - After 4-35
4-19. Bookmark Options Screen 4-37
4-20. Bookmark Screen 4-38
4-21. Zoom Edit Panel 4-41
4-22. Zoomh Edit Panel 4-42
4-23. Unformatted Screen - Hex Mode....4-44
4-24. Unformatted Screen - Character Mode 4-45
4-25. Character Screen - Character Mode....4-47
4-26. Character Screen - Hex Mode 4-49
4-27. UP Command Options Screen 4-51
4-28. Navigation Options Screen....4-52
4-29. Key Specification Screen....4-54
4-30. Key Specification Screen - Hex Key Field Values....4-56
4-31. Entering a K Line Command on the EDIT - Data Base Location Screen 4-58
4-32. Initial Key Specification Screen - K Line Command 4-58
4-33. Key Specification Screen with Key Value Specified....4-59
4-34. Formatted Screen with New Current Segment....4-59
4-35. Entering a REPEAT Primary Command on the Formatted Screen....4-60
4-36. Initial Key Specification Screen - REPEAT Primary Command 4-60
4-37. Specifying the Key and Any Data Field Changes for the Target Segment 4-61
4-38. Formatted Screen - Positioned on a New Segment 4-61
4-39. Entering an INSERT Primary Command on the Unformatted Screen....4-62
4-40. Initial Key specification Screen - INSERT Command....4-62
4-41. Specifying the Key and the Data Fields for the Segment to be Inserted. 4-63
4-42. Unformatted Screen - Positioned on the New Segment 4-63
4-43. Entering an RA Line Command on the Character Screen 4-64
4-44. Initial Key Specification Screen - RA Line Command....4-64
4-45. Specifying the Key and Data Fields for the Parent of the Substructure 4-65
4-46. Character Screen - New Substructure Displayed After Old One 4-65
4-47. EDIT - Data Base Specification Screen 4-66
4-48. Secondary Index Data Base List Screen 4-67
4-49. EDIT - Data Base Dataset Specification Screen 4-68
4-50. EDIT - Data Base Location Screen....4-69
4-51. Formatted Screen 4-70

4-52. Insert of Segment with Segment Layouts while Using Secondary Indexing 4-71
4-53. Specify New Keys for Segment with a Segment Layout 4-71
4-54. Formatted Screen with New Segment 4-72
4-55. Initial Insert of Segment with Generic Layout Using Secondary Indexing 4-72
4-56. Specify New Keys for Segment with a Generic Layout 4-73
4-57. Unformatted Screen with New Segment 4-73
4-58. Specify Disposition of Audit Trail Screen 4-76
5-1. Utility Selection Menu Screen 5-1
5-2. Initialize Data Base - Data Base Specification Screen 5-2
5-3. INITIALIZE - Data Base Dataset Specification Screen 5-3
5-4. Data Base Initialize Image Copy Specification Screen 5-5
5-5. Data Base Initialize Image Copy Specification (Informational) Screen 5-6
5-6. Data Base Initialize Image Copy Specification (Informational) Screen 5-6
5-7. Initialize Data Base - JCL Specification Screen 5-7
5-8. ISPF/PDF Edit Screen.....5-8
5-9. JCL to Execute Initialize Batch Job, Part 1 5-10
5-10. JCL to Execute Initialize Batch job, Part 2 5-11
5-11. JCL to Execute Initialize Batch Job, Part 3 5-12
5-12. Data Base Initialization Report.....5-15
6-1. Extract/Load Data Base Menu 6-1
6-2. Data Base Extract - Data Base Specification Screen 6-3
6-3. Data Base Extract - Data Base Specification Screen (static PSB) 6-5
6-4. Extract DBD Selection List for PSB 6-7
6-5. Data Base Extract - Option Specification Screen 6-10
6-6. XREF Selection List for Convert Screen.....6-12
6-7. Display PCBs for Related DBDs Screen.....6-14
6-8. EXTRACT - Data Base Dataset Specification Screen 6-15
6-9. Data Base Extract - JCL Specification Screen 6-17
6-10. ISPF/PDF Edit Screen.....6-19
6-11. DFSORT Parameters 6-21
6-12. Extract JCL-1, Part 1 6-21
6-13. Extract JCL-1, Part 2 6-22
6-14. Extract JCL-1, Part 3 6-23
6-15. Extract File Contents - Hexadecimal Format 6-27
6-16. Data Base Load - Dataset Specification (Dynamic PSB) Screen 6-29
6-17. Data Base Load - Dataset Specification Screen (static) 6-31
6-18. Data Base Load - Application Relationship Option Screen 6-33
6-19. Load DBD Selection List for PSB.....6-34
6-20. Display PCBs for Related DBDs 6-37
6-21. Data Base Load - DLI Log Usage Screen.....6-38
6-22. LOAD - Data Base Dataset Specification Screen 6-39
6-23. Data Base Load Image Copy Specification Screen.....6-41
6-24. Data Base Load Image Copy Specification (Informational) Screen.....6-42
6-25. Data Base Load Image Copy Specification (Informational) Screen.....6-42
6-26. Data Base Load - JCL Specification Screen 6-43
6-27. ISPF/PDF Edit Screen.....6-44
6-28. Sort Load File JCL, Part 1 6-46
6-29. Sort Load File JCL, Part 2 6-47
6-30. Sort Load File JCL, Part 3 6-48
6-31. Sort Load File JCL, Part 4 6-49
6-32. Sort Load File JCL, Part 5 6-50
6-33. Data Base Extract Report - Data Base Dataset Summary 6-66
6-34. Data Base Extract Report - Primary Data Base Summary 6-66
6-35. Data Base Extract Report - Related Database Summary, Part 1 6-67
6-36. Data Base Extract Report - Related Data Base Summary, Part 2.....6-67
6-37. Data Base Extract Report - Selection Criteria Summary.....6-67
6-38. Data Base Extract Report - Relationship Criteria Summary 6-68
6-39. Data Base Extract Report - Segment Criteria Summary.....6-68
6-40. Data Base Extract Report - Field Criteria Summary.....6-68
6-41. Data Base Load Exception Report.....6-70
6-42. Data Base Load Report - Data Base Dataset Summary.....6-71

6-43. Data Base Load Report - Primary Data Base Summary....6-71
6-44. Data Base Load Report - Related Data Base Summary (Part 1)....6-72
6-45. Data Base Load Report - Related Data Base Summary (Part 2)....6-72
7-1. Print Selection Menu Screen....7-1
7-2. Print Audit Trail Screen....7-2
7-3. ISPF/PDF Edit Screen....7-3
7-4. Audit Trail Report - Formatted Print Mode, Part 1....7-10
7-5. Audit Trail Report - Formatted Print Mode, Part 2....7-10
7-6. Audit Trail Report - Formatted Print Mode, Part 3....7-11
7-7. Audit Trail Report - Hexadecimal Print Mode, Part 1....7-12
7-8. Audit Trail Report - Hexadecimal Print Mode, Part 2....7-13
8-1. Selection Criteria - Dataset Specification Screen....8-2
8-2. Selection Criteria Error Summary Screen....8-4
8-3. Selection Criteria - Menu Screen....8-6
8-4. SelectionCriteria - Segment List Information Screen....8-8
8-5. Segment Criteria - Segment List Screen....8-8
8-6. Segment Criteria Screen....8-10
8-7. Field Criteria - Set List Information Screen....8-12
8-8. Criteria Sets and Criteria Records....8-13
8-9. Field Criteria Set List Screen....8-14
8-10. Field Criteria - Segment List Screen....8-15
8-11. Field Criteria List Screen....8-17
8-12. Select Record Type Value Screen....8-18
8-13. Other Record Type Value Specification Screen....8-20
8-14. Formatted Criteria Screen....8-21
8-15. Unformatted Criteria Screen....8-24
8-16. Formatted Criteria Screen....8-27
8-17. Unformatted Criteria Screen - Full Key Qualificaton....8-28
8-18. Relationship Specification Screen....8-29
8-19. Relationship Criteria Screen....8-30
8-20. Example of Limiting Target Data Bases - Part 1....8-32
8-21. Example of Limiting Target Data Bases - Part 2....8-32
8-22. Structure of the Hospital Data Base....8-33
8-23. Field Criteria Set List Screen....8-34
8-24. Field Criteria - Segment List Screen....8-34
8-25. Field Criteria List Screen....8-35
8-26. Formatted Criteria Screen....8-35
8-27. Field Criteria Set List Screen....8-36
8-28. Field Criteria -Segment List Screen....8-36
8-29. Field Criteria List Screen....8-37
8-30. Formatted Criteria Screen....8-37
8-31. Formatted Criteria Screen....8-38
8-32. Field Criteria Set List Screen....8-38
8-33. Field Criteria - Segment List Screen....8-39
8-34. Field Criteria List Screen....8-39
8-35. Formatted Criteria Screen....8-40
8-36. Formatted Criteria Screen....8-40
8-37. Formatted Criteria Screen....8-41
9-1. Segment/Layout XREF - Dataset Specification Screen....9-1
9-2. EDIT XREF Segment List Screen....9-3
9-3. Edit XREF Segment List Screen - Before Inserting a New DBD....9-5
9-4. Edit XREF Segment List Screen - After Inserting a New DBD....9-6
9-5. Edit XREF Segment List Screen - Before Changing an XREF....9-7
9-6. Edit XREF Segment List Screen - After Changing an XREF....9-7
9-7. EDIT XREF Logical Child Segment Screen....9-8
9-8. Formatted Display of Logical Child Segment Screen....9-9
9-9. Edit XREF Concatenated Segment Screen....9-10
9-10. Formatted Display of Concatenated Segment....9-11
9-11. Edit Record Type 1 Screen....9-12
9-12. EDIT Record Type 1 Screen - Hex Format....9-14
9-13. EDIT XREF Record Type 2 Screen....9-15

10-1. Application Relationship - Dataset Specification Screen 10-1
10-2. Application Relationship Error Summary Screen 10-2
10-3. Application Relationship Segment List Screen 10-4
10-4. Target DBD Specification Screen 10-5
10-5. Creating an Application Relationship - Selecting a Segment Type 10-8
10-6. Creating an Application Relationship - Specify Target Root Keys 10-9
11-1. FIND/CHANGE Message Screen 11-5
11-2. CHANGE Command Screen 11-8
11-3. FIND Command Screen 11-15
11-4. Formatted Print Screen 11-17
11-5. Formatted Print Screen with Warning Displayed 11-18
11-6. Hierarchy Display Screen 11-21
11-7. DBD/Segment Information Screen 11-22
11-8. Logical Relationship Information Screen 11-23
11-9. Segment Information Screen 11-24
11-10. Field Information Screen 11-26
13-1. Tutorial Introduction - First Screen 13-1
13-2. Tutorial Introduction - Second Screen 13-2
13-3. Tutorial Introduction - Third Screen 13-2
13-4. Tutorial Introduction - Table of Contents 13-3

Tables

1-1. Scrolling Commands 1-14
3-1. Segment Layout Dataset Types 3-4
3-2. Use Layouts Indicator 3-6
4-1. Destination Parent's Insert Rule File-AID for IMS Restrictions 4-79
5-1. EXEC Statement PARM Field - DBINIT Step 5-12
5-2. DBINIT DD Statements 5-13
5-3. EXEC Statement PARM Field - DBD 5-13
5-4. DBDELETE DD Statements 5-13
5-5. EXEC Statement PARM Field - RPTSTATS Step 5-14
5-6. RPTSTATS DD Statements 5-14
6-1. Default Key File Layout 6-4
6-2. Default Key File Layout 6-6
6-3. EXEC Statement PARM Field - DBEXTRCT Step 6-24
6-4. DBEXTRCT DD Statements 6-24
6-5. EXEC Statement PARM Field - RPTSTATS Step 6-25
6-6. RPTSTATS DD Statements 6-26
6-7. EXEC Statement PARM Field - DBLOAD Step 6-51
6-8. DBLOAD DD Statements 6-52
6-9. EXEC Statement PARM Field - DBDELETE Step 6-52
6-10. DBDELETE DD Statements 6-53
6-11. EXEC Statement PARM Field - RPTSTATS Step 6-53
6-12. RPTSTATS DD Statements 6-53
7-1. EXEC Statement PARM Field - Print Audit Trail in Batch 7-5
7-2. DD Statements to Execute Print Audit Trail Independently In Batch 7-5
8-1. Selection Criteria - Validation Errors 8-5
10-1. Application Relationship - Validation Errors 10-3

Introduction

This is a detailed reference manual for users of File-AID for IMS/ISPF. This manual provides the information necessary to fully use the features of File-AID for IMS/ISPF Release 7.1. This manual is not intended as a learning tool for first time users.

What's in Each Chapter?

The following list briefly describes the contents of each chapter in this manual:

- Chapter 1, "Overview" provides an overview to File-AID for IMS/ISPF.
- Chapter 2, "User Parameters" describes the File-AID for IMS/ISPF Option 0, parameters.
- Chapter 3, "Datasets" describes the different types of datasets used by File-AID for IMS/ISPF.
- Chapter 4, "Browse/Edit" describes File-AID for IMS/ISPF Options 1 and 2, browse and edit database.
- Chapter 5, "Utilities" describes File-AID for IMS/ISPF Option 3, utilities.
- Chapter 6, "Extract/Load" describes File-AID for IMS/ISPF Option 4, extract/load database.
- Chapter 7, "Print" describes File-AID for IMS Option 5, print audit trail.
- Chapter 8, "Selection Criteria" describes File-AID for IMS/ISPF Option 6, selection criteria.
- Chapter 9, "Segment/Layout Cross-Reference" describes File-AID for IMS/ISPF Option 7, segment/layout XREF.
- Chapter 10, "Application Relationships" describes File-AID for IMS/ISPF Option 9, application relationships.
- Chapter 11, "Primary Commands" describes File-AID for IMS/ISPF primary commands.
- Chapter 12, "Line Commands" describes File-AID for IMS/ISPF line commands.
- Chapter 13, "Tutorial" describes File-AID for IMS/ISPF Option T, tutorial.

Although File-AID for IMS supports both the COBOL and PL/I programming languages, much of its processing is unaffected by the language you use. Therefore, much of the text in this reference manual is presented in a language-independent manner. In those instances where processing is affected by the language you use, the COBOL perspective is presented first under its own indented subheading, followed by the PL/I perspective. On many of the screens and reports in File-AID for IMS, occurrences of either the word COBOL or PL/I appear, depending on the language you use. However, most of the screen and report examples presented in this reference manual use COBOL as a default.

Notation Rules

This manual uses the following notation rules:

- Screen, field, and column names appear with initial caps. For example:

  - ...on the Extract specification screen
  - ...in the Region Type field
  - ...in the Line Cmd column
- Primary command names appear in all uppercase. For example, Enter the FIELD command to...

Reading the Syntax Diagrams

Syntax diagrams define primary command syntax.

A **parameter** is either a keyword or a variable.

All KEYWORDs are shown in uppercase characters and must be spelled exactly as shown. You cannot substitute another value. If any part of a KEYWORD is shown in lowercase characters, that part is optional.

Variables are user-specified values and are printed in lowercase italics. For example, *dataset-name* indicates you are to substitute a value.

The syntax for commands is described in diagrams that help you visualize parameter use. The following example shows a command and a parameter:

```
►►─COMMAND─parameter─►◄
```

Read the diagrams from left to right and from top to bottom. These symbols help you follow the path of the syntax:

- ►► indicates the beginning of a statement.
- → indicates the statement is continued on the next line.
- ► indicates the statement is continued from the previous line.
- →◄ indicates the end of a statement.

Required parameters appear on the horizontal line (the main path). Optional parameters appear below the main path. Default parameters appear above the main path and are optional. The command executes the same regardless whether the default parameter is included.

```
                                  ┌DEFAULT-KEYWORD─┐
►►─COMMAND─REQUIRED-KEYWORD─────────────────────────┬──────────────────┬─►◄
                                                    └optional-variable─┘
```

Vertically stacked parameters are mutually exclusive. If you must choose a parameter, one item of the stack appears on the main path. If the parameters are optional, the entire stack appears below the main path. If a parameter in a stack is the default, it appears above the main path.

```
                ┌DEFAULT-KEYWORD1─┐  ┌default-var1─┐
►►─COMMAND─┼─────────────────────┼─┼─────────────┼─►◄
                ├OPTIONAL-KEYWORD2─┤  ├optional-var2─┤
                └OPTIONAL-KEYWORD3─┘  └optional-var3─┘
```

If the same parameters are used with several commands their syntax may be documented in a separate diagram. In the command syntax, these common parameters are indicated with separators before and after the parameter name.

```
►►─COMMAND─┤complex-parameter├─►◄
```

An arrow returning to the left indicates a repeatable item. If the arrow contains a comma, separate the repeated items with a comma.

```
                ┌,──────────────┐
►►─COMMAND─┬─ required-var ─┴─►◄
```

Related Publications

The following File-AID for IMS documents are available from Compuware. To obtain hardcopies, please call your Compuware sales representative.

- *File-AID for IMS/ISPF Reference Manual*: This manual details the information necessary to fully use the features of File-AID for IMS/ISPF.
- *File-AID for IMS/ISPF Installation Guide*: This manual provides a step-by-step description of how to install File-AID for IMS/ISPF on your system. It is intended for Data Base Administrators and the systems group responsible for File-AID for IMS at your installation.
- *File-AID for IMS/CICS Installation Guide*: This guide provides a step-by-step description of how to install File-AID for IMS/CICS on your system. It is intended for Data Base Administrators and the systems group responsible for File-AID for IMS at your installation.
- *File-AID for IMS/DC Installation Guide*: This guide provides a step-by-step description of how to install File-AID for IMS/DC on your system. It is intended for Data Base Administrators and the systems group responsible for File-AID for IMS at your installation.
- *File-AID for IMS/DC/CICS Reference Manual*: This manual details the information necessary to fully use the features of File-AID for IMS/DC/CICS.
- *File-AID for IMS/FLEX Reference Manual*: This manual details the information necessary to fully use the features of File-AID for IMS/FLEX.
- *File-AID for IMS Quick Reference*: This reference provides a summary of the File-AID for IMS options and commands. It is intended for any user of File-AID for IMS.
- *File-AID for IMS Messages and Codes Manual*: This manual provides information on the error messages that you may encounter within File-AID for IMS.

FrontLine Support Website

Access online technical support for Compuware products via our FrontLine support website. View or download documentation, frequently asked questions, and product fixes, or directly e-mail Compuware with questions or comments. To access FrontLine, you must first register and obtain a password at **http://frontline.compuware.com**.

Online Documentation

Documentation for this product is provided on CD-ROM in several electronic formats:

- View PDF files with the free Adobe Acrobat Reader, available at **http://www.adobe.com**.

- View HTML files with any standard Web browser.
- View BookManager softcopy files with any version of IBM BookManager READ or the IBM Softcopy Reader. To learn more about BookManager or to download the free Softcopy Reader, go to **http://www.ibm.com**.

World Wide Web

Compuware's site on the World Wide Web provides information about Compuware and its products. The address is **http://www.compuware.com**.

Getting Help

At Compuware, we strive to make our products and documentation the best in the industry. Feedback from our customers helps us to maintain our quality standards.

Questions about File-AID for IMS or comments on this document should be directed to:

Compuware Corporation
One Campus Martius
Detroit, MI 48226-5099
1-800-538-7822

If problems arise, consult your manual or the File-AID for IMS technical support representative at your site. If problems persist, please obtain the following information before calling Compuware. This information helps us to efficiently determine the cause of the problem.

1. Obtain your client number and write it in the space below.

   Client No._____

2. If you are getting an error message from File-AID for IMS, press **PF1** for an extended explanation of the error.
3. If you are getting a batch error message from File-AID for IMS, keep the JCL and output.
4. Enter the VIEW command from any COMMAND line within the product and print the configuration report. Refer to "VIEW" on page 11-43 for more information.
5. Determine the product function being used and the sequence of events leading up to the problem.
6. If files are involved, determine the file characteristics.
7. Record any ISPF/PDF error messages or operating system messages. If an abend occurs, record the abend or screen information.
8. Determine the versions of current operating system components that may have an impact on the problem.

Chapter 1. Overview

File-AID for IMS/ISPF is an interactive full-screen product designed for use by Application Programmers/Analysts and Database Administrators, and Production Support Personnel.

File-AID for IMS/ISPF enables easy access and data manipulation within IMS databases. The databases can be browsed or edited in any of the following modes directly under TSO/ISPF:

- Formatted using COBOL or PL/I segment layouts
- Unformatted in hexadecimal
- In hierarchical sequence with one segment per screen line

File-AID for IMS/ISPF runs as a single dialog under ISPF and requires absolutely no modification to IMS, TSO, ISPF, or any other existing software.

File-AID for IMS/FLEX is a general purpose IMS database manipulation tool for use by business professionals involved in modifying or reporting on the contents of IMS database. File-AID for IMS/FLEX extends the capabilities of File-AID for IMS to the MVS batch environment.

File-AID for IMS/FLEX simplifies the maintenance of IMS databases by using existing Data Base Descriptions (DBDs); existing or dynamic Program Specification Blocks (PSBs); and COBOL, PL/I, or DL/I segment layouts, without modification, to manipulate databases. Because File-AID for IMS/FLEX is built upon File-AID for IMS, it provides industrial strength editing capabilities while maintaining the system integrity and providing the auditing capability that users have come to expect from the File-AID name.

File-AID for IMS/FLEX is controlled by an easy-to-use and extremely powerful command set. File-AID for IMS/FLEX allows users to quickly and accurately select the data they desire and then allows them to print or modify that data. Users may also output the concatenated keys of the desire segments for later use as input.

Depending on system resource availability, plan to spend from one to five hours to install File-AID for IMS/ISPF.

Note: Options 1 and 2 on the File-AID for IMS/ISPF Primary Option Menu invoke the database editor under TSO/ISPF. Your installation may have chosen not to license this editor, substituting the File-AID for IMS/DC or File-AID for IMS/CICS database editor instead. If so, Options 1 and 2 are not installed and are not available from the File-AID for IMS/ISPF menu.

Certain topics can be skipped when options 1 and 2 are not installed. These are noted where applicable. File-AID for IMS/ISPF must be installed prior to the installation of File-AID for IMS/DC or File-AID for IMS/CICS.

This chapter highlights the key features of File-AID for IMS/ISPF, describes how to invoke File-AID for IMS/ISPF, summarizes the primary options, and covers several other introductory topics.

System Requirements

File-AID for IMS/ISPF has the following system requirements:

- Operating Environment: MVS/ESA, IMS version 7 or higher
- ISPF Release 3.5 or higher
- Disk storage: 15 CYL on a 3380 DASD
- Logon region size of 4 MB recommended
- TSO/E

Key Features

File-AID for IMS/ISPF contains the following:

- Provides the capability to browse and edit IMS databases. Data is viewed and edited with full-screen ISPF panels. Changing a data field in a segment is done by typing over the field value.
- Includes powerful, easy-to-use extract and load capabilities. Segments can be selected for extraction using selection criteria based on segment counts, specific values in individual fields, and/or exclusion of related databases. During extract, logically related and application related database segments are automatically extracted.
- Runs under and is modeled after ISPF. File-AID for IMS/ISPF is a menu-driven interactive system that requires minimal training.
- Uses existing DBDs to define a database structure. Also uses existing COBOL or PL/I segment layouts as templates over the data.
- Provides easily understood commands such as CHILD, TWIN, NEXT, PARENT, and ROOT that enable you to navigate through a database.
- Provides the capability to insert, delete, and repeat segments and their substructures. An optional audit trail of all database updates performed during an edit session can be generated.
- Supports HDAM, HIDAM, HISAM, HSAM, DEDB, MSDB, and logically related databases, including databases with secondary indexes.
- Provides the capability to initialize a database and all its related databases.

Invoking File-AID for IMS/ISPF

File-AID for IMS/ISPF executes as a dialog under IBM's ISPF dialog manager facility. You can invoke File-AID for IMS/ISPF by selecting the File-AID for IMS option from a customized version of the ISPF Primary Option Menu or from a sub-menu panel that your installation has set up.

The first screen displayed upon entry to File-AID for IMS/ISPF is the Primary Option Menu.

Figure 1-1. Primary Option Menu

```
File-AID for IMS ------------- Primary Option Menu ----------------------------
OPTION  ===>

  0  Parameters     Specify user parameters                User ID  - TSOUSER
  1  Browse         Display data base contents             PF Keys  - 24
  2  Edit           Create or change data base contents    Terminal - 3278
  3  Utilities      Perform utility functions              Time     - 13:10
  4  Extract/Load   Extract or load a data base or subset  Julian   - 02.241
  5  Print          Print an audit trail                   Date     - 03/01/10
  6  Selection      Create or change selection criteria   Release  - 07.01.00
  7  Xref           Create or change segment/layout cross reference
  8  Not Available  Reserved for future use                Env      - DEV1
  9  Relationship   Create/change application relationships
  F  FLEX           File-AID for IMS/FLEX Options
  C  Changes        Display summary of File-AID/IMS changes
  T  Tutorial       Display information about File-AID/IMS
  L  Legal          Copyright and Trade Secret Notice
  X  Exit           Terminate File-AID/IMS and return to ISPF


Enter END command to terminate File-AID for IMS
          Visit Compuware's WEB site at http://www.compuware.com/
      Copyright (c) 2005, an unpublished work by Compuware Corporation.
                              All Rights Reserved.
```

Select an option by entering its one-character code in the Option field. For example, to select the Edit option, enter:

```
OPTION ===> 2
```

When invoking File-AID for IMS/ISPF, you can specify the initial option to bypass the Primary Option Menu by entering the File-AID for IMS option (usually I), followed by a period (.), followed by a function number. For example, to select the Edit function from the Primary Option Menu, enter:

```
OPTION ===> I.2
```

File-AID for IMS/ISPF Primary Options

Note: If your installation did not purchase a component, an asterisk appears on the screen in front of the options that are unavailable.

Option 0 The Parameters option screen allows you to view and/or change the common File-AID for IMS/ISPF system, print, and IMS parameters currently in effect for your File-AID for IMS/ISPF session. It includes the administration option where authorized administrators can define IMS system and application environments.

Option 1 The Browse option is used to display but not change the contents of databases using any of three display modes: Formatted, Unformatted, and Character.

Option 2	The Edit option is used to display, change, insert, and delete the contents of databases using the Formatted, Unformatted, and Character display modes.
Option 3	The Utilities option is used to initialize a newly allocated database and all its related databases.
Option 4	The Extract/Load option is used to extract segments from a database into a file and to load records from a file into a database.
Option 5	The Print option is used to print audit trail datasets created while editing a database in Option 2 or in the Batch Component of File-AID for IMS/ISPF.
Option 6	The Selection option is used to create and maintain existing selection criteria for use in the Extract function.
Option 7	The Xref option is used to create and maintain segment/layout cross-references for use in other File-AID for IMS functions.
Option 9	The Relationship option is used to create and maintain application relationships for use in the Selection Criteria and Extract functions.
Option F	The FLEX option is used to access the FLEX ISPF interface to create/edit FLEX commands and generate JCL to execute the FLEX batch job.
Option C	The Change option documents changes made in the various releases of File-AID for IMS/ISPF.
Option T	The Tutorial option provides online documentation about the use of File-AID for IMS/ISPF. You can select the tutorial by entering Option T on the Primary Option Menu or by entering the HELP command on any screen in the system.
Option L	The Legal option contains the copyright and trade secret notices associated with File-AID for IMS.

Access to Online Databases

File-AID for IMS invokes IMS under TSO/ISPF. This allows you to edit or browse an IMS database using TSO/ISPF. If the database is used by an IMS on line system, it can be accessed in the following ways:

1. Under TSO, File-AID for IMS can invoke an IMS BMP region. File-AID for IMS then runs as the IMS application program in a BMP region. In this environment you can browse and edit the online database while other IMS application programs are concurrently accessing the database. Since this BMP region will normally be in wait state, waiting for the key board to be used again after displaying a segment on the screen, it will have negligible impact on the performance of your online system.
2. Under TSO, File-AID for IMS can invoke an IMS DL/I region to access the database, after the database has been taken offline (deallocated from the IMS online system). The IMS DL/I region then has exclusive use of the database.
3. Under TSO, File-AID for IMS can invoke an IMS DL/I region while the database is currently being used by the online system provided that the IMS is using block level data sharing for the database. The normal requirements for block-level data sharing must be satisfied. This requires that DBRC is active, that the database and datasets are registered in DBRC and depending on the DBRC registered share level, that the LM is used for the lock manager. Prior to File-AID for IMS Release 6.1, if the function would potentially update the database (edit or load utility), File-AID for IMS allocated the database DISP=OLD. To use IMS block-level data sharing in the DL/I region, a user provided security exit was necessary to change the allocation from OLD to SHR. With Release 6.1, if the DL/I region is using DBRC and the datasets for the database are the datasets registered in DBRC, File-AID for IMS will allocate the database with DISP=SHR, so the security exit is no longer required for this reason.

PSB Generation

Prior to Release 4.5, File-AID for IMS/ISPF only used dynamic PSBs. When using a dynamic PSB, File-AID for IMS/ISPF generates its own Program Specific Block (PSB) for DL/I and BMP processing. This process is convenient because you do not need to generate any PSBs or specify existing PSBs.

With Release 4.5, File-AID for IMS/ISPF supported both dynamic and static PSBs for browse, edit, and batch option functions. With Release 5.0, File-AID for IMS/ISPF also supports dynamic and static PSBs for Extract/Load. NOTE: When migrating to Release 5.0, existing JCL jobs using IRC regions need to be rebuilt. When using a static PSB, File-AID for IMS/ISPF uses an existing PSB. You specify the name of a PSB and PSB library. File-AID for IMS/ISPF then examines this PSB and asks you to select one or more of the DBDs in the PSB as the database you intend to use.

DL/I and BMP Processing (Dynamic PSB)

When you browse, edit, initialize, extract, or load a database, File-AID for IMS/ISPF generates its own Program Specification Block (PSB) for DL/I and BMP processing. You do not need to generate any PSBs or specify existing PSBs when using DL/I or BMP.

File-AID for IMS/ISPF generates its PSB such that during the browse/edit conversation, the PSB is sensitive to the segments you specify. The methods of including and excluding segments from processing are explained on page 4-14. File-AID for IMS/ISPF uses two PCBs during its processing.

During the Extract/Load and Initialization functions, PCBs are included for the primary database and all logically or application related databases.

File-AID for IMS/ISPF generates its PSB with PROCOPT=GO to browse a database and with PROCOPT=GOT to extract a database.

When editing a database, File-AID for IMS/ISPF generates its PSB with PROCOPT=A. When editing a database via a secondary index, File-AID for IMS/ISPF generates its PSB with PROCOPT=GR for the secondary index target segment and all the target segment's physical parents. PROCOPT=A is generated for all other segments in the DBD.

When initializing or loading a database in Load mode, File-AID for IMS generates its PSB with PROCOPT=L. When loading in Update or Insert mode, the PSB is generated with PROCOPT=A.

The generated PSB resides in main storage and exists only while the database is being accessed.

Listed below are several advantages of using dynamic PSBs:

- You do not have to know and inform File-AID for IMS/ISPF which PSB includes the necessary access (PCB) for the database you need to edit or browse. You only need to tell File-AID for IMS/ISPF which database to use and whether the function is Edit or Browse, and File-AID for IMS/ISPF will generate the PSB for IMS to use.
- The PSB will have the processing options set based on the required function. That is, if the function is Edit, the processing option is A, which provides get, insert, delete, and replace capability. If the function is Browse, the processing option is GO, which provides the get only function without locking.
- File-AID for IMS/ISPF generates a PSB with two PCBs for the database. When doing a repeat all function, File-AID for IMS/ISPF gets segments from one PCB and inserts the segments using the other PCB. This process makes some of the restrictions required when using a static PSB unnecessary when doing a repeat all that involves segments without a unique key.

There are also some disadvantages of using dynamic PSBs:

- A dynamic PSB should not be used when the IMS system is using the Extended Restart Facility, especially if the DOPT library empty option is used. If this facility is used, the DOPT library may be reset empty before the IMS tracking system loads the PSB from its ACBLIB. This results in an abend of the IMS tracking system.
- The IMS batch backout facility requires that the PSB used in the backout process is the same PSB used when the updates were made. Since the dynamic PSB is never placed in a PSB library, should backout be necessary, a PSB would need to be constructed to be used for the batch backout process. Refer to "IEFRDER DD" on page 3-9 for a description of how this is done for a dynamic PSB.

DL/I and BMP Processing (Static PSB)

When using a static PSB to browse or edit, extract or load a database, you must specify a PSB name and PSB library. File-AID for IMS/ISPF examines this PSB and then asks you to specify which databases you want to process.

Within the PSB, the PCB for the DBD you select may not be sensitive to all the segments in the database and the processing options specified for the DBD may limit the functions (insert, delete, replace) that can be performed. File-AID for IMS/ISPF prevents you from attempting to perform functions not supported by the PCB.

Although you are using an existing PSB, you can inform File-AID for IMS/ISPF to exclude some of the segments. Although the PSB is sensitive to the segments, File-AID for IMS/ISPF excludes them from being displayed.

Listed below are several advantages of using static PSBs:

- The normal IMS authorization mechanism is more applicable. Normally authorizing a user to a PSB determines which databases the user can access and what functions the user can perform. This is true using a static PSB. Using a dynamic PSB, the PSB name cannot be used for authorization purposes. When using a dynamic PSB, the File-AID for IMS/ISPF security exit can be used to provide authorization.
- For BMP processing it is not necessary to update the IMS GEN with new APPLCTN macros for the names of the DOPT PSBs.
- For BMP processing it is not necessary to provide an ACBLIB for the ACBGENs for the DOPT PSBs.
- If it is necessary, multiple databases can be edited within one edit session more efficiently using a static PSB that provides access to all the databases.
- A static PSB can limit the update capability during Edit so that a user could, for example, perform replaces but not deletes.
- IMS Batch Backout requires that the same PSB be used for backout as when the changes were made. This PSB is available when using a static PSB. Refer to "IEFRDER DD" on page 3-9 for a description of how this is done for a dynamic PSB.

ACB Processing (Dynamic PSB only)

When you use File-AID for IMS/ISPF to browse, edit, extract, or load databases in BMP, File-AID for IMS dynamically builds its own Application Control Block (ACB). The ACB is created from the PSB generated by File-AID for IMS and from the Data Base Definitions (DBDs) in the user-specified DBD library. You do not need to build any ACBs or specify existing ACBs when using File-AID for IMS/ISPF.

Database Security

File-AID for IMS is compatible with any data security software your installation might have. File-AID for IMS processing does not circumvent your security software in any way.

Your installation can create its own security exit routine that File-AID for IMS calls during its processing. Following are some examples of uses of the optional security exit routine:

- To limit access to certain databases or datasets.
- To force the creation of an audit trail when Option 2, Edit is used to edit selected databases and/or to force the printing of an audit trail report upon completion of the database updates.
- To enable you to enter a shorthand version of a database dataset name that is then translated to a full dataset name.
- To override or customize the parameters passed to IMS based on the database you are processing.
- To validate your specification for the automatic creation and deletion of the IMS log dataset during database editing.

If you require information about your installation's security exit routine, contact the person responsible for File-AID for IMS at your installation.

To minimize the possibility of database integrity loss, File-AID for IMS/ISPF enables you to control the issuance of DL/I CHKP calls through the SAVE and RECOVERY commands in the Edit function. These commands are explained in detail in Chapter 4, "Browse/Edit".

Terminating File-AID for IMS/ISPF

File-AID for IMS/ISPF can be terminated in any of the following ways:

- Enter the END command on the Primary Option Menu.
- Enter Option X on the Primary Option Menu.
- Enter the =X jump command on most product screens.

ISPF/PDF termination is described in the *ISPF/PDF Program Reference Manual*.

File-AID for IMS/ISPF can terminate abnormally in any of the following situations:

- When File-AID for IMS detects an unrecoverable error
- When File-AID for IMS itself terminates abnormally
- When the IMS control program abends

When File-AID for IMS detects an unrecoverable error, the Error Display screen shown in Figure 1-2 is displayed. The error message is shown at the bottom of the screen.

Figure 1-2. Error Display Screen - Unrecoverable Error

```
File-AID for IMS -------------- Error Display -------------------------------
COMMAND ===>

    ********************************************************************
    *                                                                  *
    *                                                                  *
    *    File-AID for IMS/ISPF HAS TERMINATED ABNORMALLY FOR THE       *
    *                                                                  *
    *    REASON SHOWN BELOW.  THE NEXT KEYBOARD INTERACTION WILL       *
    *                                                                  *
    *    RESULT IN A RETURN TO ISPF.                                   *
    *                                                                  *
    *                                                                  *
    ********************************************************************


ERROR MSG ID = F305 UNABLE TO ESTABLISH ESTAE DURING DATASET OPEN PROCESSING
```

When File-AID for IMS itself abnormally terminates, the Error Display screen shown in Figure 1-3 is displayed. The system abend code and user code are displayed along with the name and address of the active load module and the contents of the general registers at the time of the abend. This information is useful in diagnosing the cause of the abend.

Figure 1-3. Error Display Screen - Abnormal Termination

```
File-AID for IMS -------------- Error Display -------------------------------
COMMAND ===>

    ********************************************************************
    *                         Version: 07.01.00                        *
    *                                                                  *
    *    File-AID for IMS HAS TERMINATED ABNORMALLY DUE TO AN O/S      *
    *                                                                  *
    *    ABEND.  PRESS ENTER TO RETURN TO ISPF.                        *
    *                                                                  *
    *                                                                  *
    ********************************************************************

      SYSTEM COMPLETION CODE = SOC1         USER CODE = U000
      PSW AT TIME OF ERROR   478D0000   00174B4A
        ACTIVE LOAD MODULE   ADDRESS = 0016F008     OFFSET = 00005B42
        NAME = IXPEDITS

          R0  000AC928    R1  000AC908    R2  4016F114    R3  00172C18
          R4  000B5140    R5  00000000    R6  000B4E58    R7  000B4988
          R8  000AC7DE    R9  000B5140    R10 000B4988    R11 FF000000
          R12 000AA010    R13 000ABC30    R14 4016FA32    R15 00174B48
```

In both situations, pressing the ENTER key will cause the ISPF abnormal termination screen to be displayed. This screen indicates one of the following abend codes:

2047 File-AID for IMS intercepted an abend.

2045, 2047 An error occurred while establishing or cancelling the File-AID for IMS ESTAE environment.

2040, An error occurred while handling an abend.
2041,
2043,
2044

2042 An abend occurred while handling an abend.

When the IMS control program abends, the Error Display screen shown in Figure 1-4 is displayed. The information displayed is similar to that shown in Figure 1-3. In addition to basic system diagnostics, information concerning the status of IMS may also be displayed.

Figure 1-4. Error Display Screen - Control Program Abend

```
File-AID for IMS -------------- Error Display --------------------------------
COMMAND ===>                                                DATE   99/07/14
                                                            TIME   10:35

    ************************* Version 07.01.00 ***************************
    *   File-AID for IMS HAS TERMINATED ABNORMALLY DUE TO AN O/S ABEND.  *
    *   PRESS ENTER TO RETURN TO THE FIRST BROWSE/EDIT SCREEN.           *
    **********************************************************************

      PSW AT TIME OF ERROR   478D0000   001F92D8
        ACTIVE LOAD MODULE   ADDRESS = 00191004     OFFSET = 000682D4
        NAME = IXPEDITL

          R0  FF2B7D70    R1  002B7C48    R2  401F224C    R3  001F48E0
          R4  00180AD0    R5  00000000    R6  002AF010    R7  002AF3DC
          R8  0017FAD0    R9  00000120    R10 00000000    R11 00000015
          R12 002A5010    R13 002B7B60    R14 401F2744    R15 001F9290

      SYSTEM ABEND CODE = 0C1                     IMS USERCODE = 0000
      CHECKPOINT ID     = IX000001
```

While IMS is active, the following types of abends cause this screen to be displayed:

- A system abend
- An IMS user code
- A File-AID for IMS user code

If IMS returns a non-zero user code, the Error Display screen will appear as it does in Figure 1-5. All system diagnostics pertaining to the active load module will be zeros or blanks. Only the user code, status code, checkpoint ID and system message will contain useful information.

Figure 1-5. Error Display Screen - Control Program Abend

```
File-AID for IMS -------------- Error Display -------------------------------
COMMAND ===>                                                DATE   99/07/14
                                                            TIME   10:35

    ************************* Version 07.01.00 **************************
    *   File-AID for IMS HAS TERMINATED ABNORMALLY DUE TO AN O/S ABEND.  *
    *   PRESS ENTER TO RETURN TO THE FIRST BROWSE/EDIT SCREEN.           *
    ********************************************************************

      PSW AT TIME OF ERROR   00000000   00000000
        ACTIVE LOAD MODULE   ADDRESS = 00000000     OFFSET = 00000000
        NAME =

          R0  00000000    R1  00000000    R2  00000000    R3  00000000
          R4  00000000    R5  00000000    R6  00000000    R7  00000000
          R8  00000000    R9  00000000    R10 00000000    R11 00000000
          R12 00000000    R13 00000000    R14 00000000    R15 00000000

      SYSTEM ABEND CODE = 000                        USERCODE = 2047
      CHECKPOINT ID     = IX000000                 STATUS CODE = AI

    E901 AI - DATA MANAGEMENT ERROR - IMS COULD NOT OPEN YOUR DATA BASE
```

Refer to the *OS/VS Message Library: VS2 System Codes Manual* for system abend codes. The checkpoint ID displayed identifies the last checkpoint taken before the abend occurred. This sync point may or may not include the latest updates to the database.

Three of the most commonly encountered system abend codes are 106, 80A, and 878. All occur when the amount of remaining storage in your TSO address space is insufficient for File-AID for IMS or IMS to continue processing. When you receive one of these abend codes, terminate your current TSO session and log on with a larger region size.

For File-AID for IMS and IMS user codes, a message that describes the error is displayed at the bottom of the screen. The last checkpoint ID is also shown. If the checkpoint ID is IX000000, a checkpoint was not taken.

Refer to the *IMS/ESA Messages and Codes Reference Manual* for IMS user codes. The checkpoint ID identifies the last checkpoint taken before the abend occurred and may or may not include the latest updates to the database.

The File-AID for IMS user code is always 2047, which means File-AID for IMS intercepted the abend. If applicable, an IMS status code is displayed and File-AID for IMS issues a checkpoint prior to termination. In this situation, because the checkpoint was the last action taken before the abend occurred, all your updates are reflected in the database.

Screen Format

The heading, which is the first three lines of each display is formatted as follows:

TITLE	SHORT MESSAGE
COMMAND/OPTION	SCROLL
LONG MESSAGE	

Title Identifies the function that is being performed and, where appropriate, library or dataset information.

Short Message Indicates current line or column positions, successful completion of a processing function, or error conditions (accompanied by audible alarm).

Command/Option	Used to enter commands or option selections.
Scroll	Contains the current scroll amount on screens where scrolling applies.
Long Message	Displays an expanded explanation of error conditions upon request (this line is normally blank or contains display-only fields). Long messages also appear in pop-up windows.

Types of Screens

File-AID for IMS displays the following screen types:

- Option Selection
- Dataset Specification
- Member List
- Scrollable Data Display
- Unscrollable Data Display

Option Selection Screen

An option selection screen enables you to select an option from a list. The Primary Option Menu, shown in Figure 1-1 on page 1-3, is an example of this type of screen.

Dataset Specification Screen

A dataset specification screen enables you to enter dataset names, member names, and other parameters. Many of the fields are pre-formatted with the last value entered. The presence of a highlighted plus (+) or minus (-) sign preceding a dataset input field indicates dataset concatenations. Refer to “Dataset Concatenation Support” on page 3-1 for additional information. The EDIT–Data Base Specification screen, shown in Figure 1-6, is an example of this type of screen.

Figure 1-6. EDIT - Data Base Specification Screen

```
File-AID for IMS ----- Edit - Data Base Specification (Dynamic PSB) -----------
COMMAND ===>
ENV: DEV1 - DEVELOPMENT ENVIRONMENT WITH CONCATENATIONS
               Region type . . BMP        (DLI or BMP)  BMP AGN = IMS6RACF
          + DBDLIB dataset 1 . . XXXXXXXX.FISAMP.DBDLIB
                   Dataset 2 . .
                      Member . .            (Blank or pattern for member list)
     Use secondary indexing . . N           (Y = Yes; N = No)
           Exclude segments . . N           (Y = Yes; N = No; DLI and BMP only)
--------------------------------------------------------------------------------
           Use COBOL layouts . . Y          (Y = Yes; N = No)
              + XREF dataset . .
                      Member . .            (Blank or pattern for member list)

   + COBOL layout dataset 1 . .
                   Dataset 2 . .
--------------------------------------------------------------------------------
          Create audit trail . . N          (Y = Yes; N = No)

For DLI processing specify the following:
      IMS log dataset usage . . N          (AK = Allocate; keep after edit
                                            AD = Allocate; delete after edit
                                            N  = Do not use log dataset)
```

Member List Screen

A member list screen displays a list of members in a partitioned dataset. Up/down and left/right scrolling is available. The left/right display varies depending upon the type of library for which the member list is displayed. Enter **S** next to the desired member name to select it. The Segment/Layout XREF Member List screen, shown in Figure 1-7, is an example of this type of screen.

Figure 1-7. Segment/Layout XREF Member List Screen

```
XREF Library Member List ---------------------------------------------------
COMMAND ===>                                                 SCROLL ===> CSR
    NAME   CONCAT   DESCRIPTION                CREATED   LAST MODIFIED     ID
  BADDBD     2                                02/05/15  02/05/15 14:34  USERID0
  BI@DSNDB   4                                99/06/10  99/06/10 06:28  USERID0
  CUSTPAN    4                                02/11/15  02/11/15 14:54  USERID0
  DBDBRKDB   2                                02/01/25  02/01/25 11:09  USERID0
  DBDUNI01   2 TEST CASE                      01/12/18  03/01/22 12:01  USERID1
  DBDUNI04   2                                01/12/18  01/12/18 13:00  USERID1
  DBSEGDSN   4                                99/06/10  02/06/21 14:47  USERID2
  G          2 EMPTY XREF                     00/09/25  02/06/18 13:31  USERID2
  GREGG      2                                02/05/15  02/06/21 09:27  USERID4
  HPORDR     4                                03/01/13  03/01/13 15:16  USERID4
  HPPART     4                                03/01/13  03/01/13 15:15  USERID3
  HSMVSDB    2                                01/12/18  01/12/18 13:01  USERID3
  IXDCLT     4                                99/04/27  02/06/17 11:10  USERID1
  IXDFEMPL   4 EMPLOYEE DATABASE DEDB         99/06/16  99/06/16 15:31  USERID1
  IXDFIORD   4 ORDER DEDB                     99/06/16  01/08/31 14:15  USERID0
  IXDLTM     2                                01/03/23  01/03/23 14:32  USERID8
  IXHCUST    3                                01/02/05  01/02/05 22:39  USERID8
  IXHORDR    3                                01/02/05  01/02/05 22:41  USERID7
  IXHPART    3                                01/02/05  01/02/05 22:41  USERID7
  IXLCUST    4                                99/06/11  02/06/17 10:13  USERID7
  IXPCLT     4                                99/04/27  99/04/27 09:22  USERID3
```

Scrollable Data Display

A scrollable data display screen shows database contents or segment layouts. Up/down and, in some cases, left/right scrolling is available. The EDIT - Formatted screen shown in Figure 1-8 is an example of this type of screen.

Figure 1-8. EDIT - Formatted Screen

```
EDIT - CW.FISAMP.ORDER ---------------------------- (DBD-PORDR   )- LINE 00001
COMMAND ===>                                                SCROLL ===> PAGE
PARENT   ORDR010
SEGMENT  ORDR040   CONCATENATED KEY: AA2222,01C7477A
--------LEVEL NUMBER/DATA-NAME--------- -FORMAT- ---------FIELD VALUE----------
01  SCRAP-DATA
  05  SCRAP-KEY
    07  PROCESS-INDICATOR               C   2  K 01
    07  PART-NUMBER                     C   6  K C7477A
  05  MATERIAL-TYPE-INDICATOR           C   2    RM
  05  SCRAP-QTY                         PS  5  2 2.00
  05  REASON-CODE                       C   2    BS
  05  DESCRIPTION                       C  15    BURNT MATERIAL
  05  REWORK-INDICATOR                  C   1    Y
  05  SCRAP-DATE                        Z   8    19880912
*** END OF LAYOUT. LENGTH =    40 ***




ENTER UNFMT TO SWITCH TO UNFORMATTED MODE, CHAR TO SWITCH TO CHARACTER MODE
```

Unscrollable Data Display

An unscrollable data display screen shows non-repeating information that fits on a single screen. The EDIT XREF–Logical Child screen shown in Figure 1-9 is an example of this type of screen.

Figure 1-9. EDIT XREF - Logical Child Screen

```
EDIT XREF - CW.FISAMP.XREFC(PORDR) ------------------------------------------
COMMAND ===>
DATA BASE: PORDR    SEGMENT: ORDR050    ORDR-CUST LCHLD

Specify COBOL information for Logical Child segment:

----------------- destination Parent Concatenated Key (DPCK) ------------------
  DPCK included in the COBOL MBR below    ===> N  (Y = Yes; N = No)

    If no, specify the length of the DPCK ===> 8

----------------- COBOL Member - Defines LCHILD Segment Data ------------------
  Specify COBOL MBR  ===> ORDR050     (Required)
  Starting Data-name ===>                                (Blank for entire mbr)



Note - There are 2 portions to a Logical Child segment:
   1.  Destination Parent Concatenated Key (Total DPCK Key Length = 8)
   2.  Logical Child Data              Data base: PORDR     Segment: ORDR050

Enter END command to return to the Segment/Layout XREF Segment List screen
```

Scrolling

In many File-AID for IMS/ISPF functions, the information displayed exceeds the screen size. The scrolling commands enable you to move the information up or down, right or left to view all the displayable data. In addition, the LOCATE command can be used on some screens to scroll to a specified line number or data-name.

Table 1-1. Scrolling Commands

Command	Scrolling Function
UP	Scrolls toward the top of a segment, database, segment layout, or member list by the specified scroll amount.
DOWN	Scrolls toward the end of a segment, database, segment layout, or member list by the specified scroll amount.
LEFT	Scrolls toward the left margin of the displayed segments. Left scrolling is available on the Browse/Edit Character screen only.
RIGHT	Scrolls toward the right margin of the displayed segments. Right scrolling is available on the Browse/Edit Character screen only.
LOCATE	Scrolls directly to a specified line number, segment layout data-name, or member name.

A scroll amount is displayed on line two of screens that allow scrolling. The value indicates the number of lines or columns to scroll when you enter one of the four page scrolling commands. You can change the scroll amount by simply typing over the scroll amount.

Following are the valid scroll amounts:

A number from 1 to 9999

The number of lines/columns to scroll.

PAGE Scroll by one logical page.

DATA Scroll by one logical page less one line.

HALF Scroll by half of a logical page.

MAX Scroll to the top, bottom, or left/right margin, depending on which scrolling command is used.

CUR Scroll based on the current position of the cursor. The scrolling command that is used will make the line or column where the cursor is positioned to be moved to the top, bottom, left, or right of the screen. If the cursor is not in the body of the data or if it is already positioned at the top, bottom, or left/right margin, a full page scroll occurs.

For scrolling purposes, a page is defined as the amount of information that is currently visible on the logical screen. In split screen mode, for example, the edit Character display might have 12 lines by 60 columns of scrollable data. In this case, a scroll amount of HALF would move the window up or down by 6 lines, or right or left by 30 columns.

The current scroll amount is saved in the user profile. When you type over the scroll amount, the new value remains in effect until you change it again.

You can enter a scroll amount in the Command field and use a scroll command or PF key to override the current scroll amount on a given interaction. For example, you can enter:

```
COMMAND ===> DOWN 5
```

and press Enter, or

```
COMMAND ===> 5
```

and press the DOWN PF key.

Either format results in a temporary, one-time override of the scroll amount.

To reduce keystrokes, change the scroll amount by typing over the first character in the scroll amount field.

To change the scroll amount to PAGE, DATA, HALF, MAX, or CUR, type over the first character with P, D, H, M, or C, respectively.

To change the scroll amount to a number of lines or columns, type a number over the first character.

Split Screen

You can enter split screen mode and use the SWAP primary command in File-AID for IMS/ISPF exactly as you do in ISPF/PDF. These features are described in the *ISPF/PDF Program Reference Manual*.

File-AID for IMS/ISPF allows only one active browse or edit database conversation per user. If you are in split screen mode and browsing or editing a database on one logical screen, you cannot enter Option 1 or 2 on the other logical screen. When you are in Option 1 or 2 on one logical screen, you can enter another File-AID for IMS/ISPF option (other than Option 1 or 2) or an ISPF option on the other logical screen.

Help Function

The Help function enables you to obtain additional information about a message displayed in the upper right corner of the screen or to enter the tutorial.

If you enter the HELP command immediately after a message is displayed, a one-line explanation is displayed on line three of the screen. If this explanation is not sufficient, you can obtain further information by entering the HELP command again to invoke the appropriate section of the tutorial (refer to Chapter 13, “Tutorial”). If you enter the HELP command when a message is not displayed, you will enter the appropriate section of the tutorial.

Once in the tutorial, enter the END command to return to the screen that was displayed when you originally requested help.

Command Entries

All File-AID for IMS/ISPF primary and line commands are summarized in Chapter 11, “Primary Commands” and Chapter 12, “Line Commands”, respectively. In addition, commands specific to a File-AID for IMS/ISPF function are fully described in the chapter describing that function.

Primary Commands

Primary commands can be entered in one of the following ways:

- By typing the command in the Command field and pressing Enter.
- By pressing a PF key that is assigned a command.

You can assign commands to PF keys using the KEYS command. When you press a PF key, the processing is the same as if you typed the command in the Command field and pressed ENTER.

Before you press a PF key, you can enter information in the Command field. The PF key definition is concatenated ahead of the contents of the Command field.

For example, suppose you assign the DOWN command to PF1. If you type 6 in the Command field and press PF1, the results are the same as if you had typed DOWN 6 in the Command field and pressed ENTER.

You can stack multiple commands for execution in one interaction by entering a special delimiter between the commands. The default delimiter is a semicolon. For example:

```
COMMAND ===> DOWN  10;LEFT
```

In this example, the DOWN and LEFT commands have been stacked.

Jump Commands

Jump commands enable you to switch from one option to another without going through the File-AID for IMS/ISPF Primary Option Menu. A jump command consists of an equal sign, followed by a primary option (and sub-option if desired) entered in any prompt field (fields preceded by ===>). For example:

```
COMMAND ===> =0.2
```

Line Commands

Line commands are entered in the two-position line command column next to the appropriate item. Line commands enable you to insert, delete, and repeat segments, to change your current position in a database, and to select items.

Terminal Keys

You can use the program access (PA) and program function (PF) keys on your keyboard to request commonly used operations. PF keys are not required by File-AID for IMS/ISPF, but a default set of PF key definitions is established. The PF key definitions can be changed with the KEYS command.

Program Access Keys

Note: The PA keys cannot be changed.

PA1 (ATTENTION)

Normally, the PA1 key is not used while you are in File-AID for IMS/ISPF full-screen mode. Refer to the information below for exceptions.

PA2 (RESHOW)

The PA2 key displays the contents of the screen again. PA2 is useful if you pressed the ERASE INPUT or CLEAR key accidentally or if you typed unwanted information but have not yet pressed ENTER or a PF key.

Depending on whether IMS is active (IMS is active once the EDIT–Data Base Location screen is displayed) and whether the keyboard is unlocked, PA1 processing within File-AID for IMS/ISPF varies in the following situations:

- If IMS is not active and you press PA1 after File-AID for IMS/ISPF unlocked the keyboard, the screen is displayed again as if you pressed PA2. It does not cause an exit from File-AID for IMS. If you press PA1 a second time without any intervening interaction, the current processing is terminated, and the ISPF Primary Option Menu is displayed.
- If IMS is not active and you press PA1 after manually unlocking the keyboard (by pressing RESET), the current processing is usually terminated. The ISPF Primary Option Menu is displayed.
- If IMS is active (for example, when a database manipulation screen in the browse/edit conversation is displayed) and you press PA1 after the keyboard is unlocked, the screen is displayed again as if you pressed PA2. It does not cause an exit from File-AID for IMS. Each time you press PA1, the screen is displayed again as if you pressed PA2.

– If IMS is active and you press PA1 after manually unlocking the keyboard (by pressing RESET), the TSO attention prompt (|) is displayed. If you press PA1 a second time without any intervening interaction, File-AID for IMS issues a DL/I checkpoint call and terminates IMS. The File-AID for IMS abend screen is displayed with File-AID for IMS error F902. Your next keyboard interaction returns you to the EDIT - Data Base Specification screen.

CAUTION:

When IMS is active and you press PA1, wait for the TSO attention prompt (|) to be displayed before you press PA1 again. If you press PA1 a second time too quickly, the results are unpredictable. The DL/I checkpoint call cannot be issued; datasets allocated to IMS DD names cannot be freed, which causes problems the next time IMS is activated; and ISPF can abend. To avoid problems, allow the first PA1 to complete its processing before you press PA1 a second time.

Program Function Keys

The default PF key assignments are shown below. You can change these assignments with the KEYS command.

PF1/13	HELP
PF2/14	SPLIT
PF3/15	END
PF4/16	NEXT
PF5/17	RFIND
PF6/18	RCHANGE
PF7/19	UP
PF8/20	DOWN
PF9/21	SWAP
PF10/22	PARENT
PF11/23	ROOT
PF12/24	RETURN

File-AID for IMS/ISPF Audit Trail Feature

When you use Option 2 of File-AID for IMS/ISPF to edit a database, you can indicate that all your update activity is to be captured in an audit trail dataset or system SMF log file.

Every insert, repeat, delete, and type over you perform causes a before and/or after image of the segments affected to be written to the audit trail. When you complete your edit session, a screen is displayed that provides the option to print, delete, or keep the audit trail. If you specify that the audit trail is to be printed, a batch job that produces either a formatted or hexadecimal audit trail report is submitted.

File-AID for IMS/ISPF also provides your installation with the ability to force the creation of an audit trail during any user's edit session through a security exit routine. This process is especially useful if your installation wants to ensure that an audit trail is created whenever File-AID for IMS/ISPF is used to edit certain sensitive databases. When the edit session is complete, the security exit routine can also be used to force the automatic submittal of a batch job to produce the audit trail report, thereby ensuring that a record of the edit session is printed. The security exit can also be used to force the use of the system SMF log file.

If you require information on how your installation may be using a security exit routine to force audit trail creation and/or printing, contact the person responsible for File-AID for IMS/ISPF at your installation.

Chapter 2.
User Parameters

Environment definitions were created during the File-AID for IMS/ISPF installation process. With File-AID for IMS/ISPF Release 7.1, if you have the appropriate RACF authorization, you can use option 0, Parameters, on the File-AID for IMS/ISPF Primary Option Menu (Figure 1-1 on page 1-3), to make modifications and additions to these definitions. Select option 0 to display the Parameters Selection Menu as displayed in Figure 2-1.

Parameters Selection Menu

The Parameters Selection Menu is displayed when you select option 0 on the File-AID for IMS/ISPF Primary Option Menu or enter an **=0** jump command from another screen within File-AID for IMS/ISPF. The Parameters Selection Menu is used to view and change system parameters, print parameters, and IMS parameters currently in effect for your session and administer the IMS system and application environment configurations.

Figure 2-1. Parameters Selection Menu

```
File-AID for IMS  --------  Parameters Selection Menu  ------------------------
OPTION  ===>

 E Select Environment   Select environment

 1 System Parameters    Specify system parameters
 2 Print Parameters     Specify print parameters
 3 IMS Parameters       Specify IMS parameters
 4 Datasets             View Datasets Concatenations

 A Administration       Environment Administration
 I Information          View parameter summary information
```

Option E lets you view/select an IMS environment. Options 1 through 3 let you view and modify the parameter settings for your current system configuration. Option 4 enables you to view dataset concatenations in effect for the selected environment. Option A enables File-AID for IMS administrators to view and modify the IMS system and environment definitions. Option I displays File-AID for IMS installation parameters in addition to the IMS system and environment parameters as defined with the Administration option.

Note: Option A, Administration, displays on the Parameters Selection Menu only if your installation chose to make this option available to users from the product panels.

Select one of the following options to proceed:

Option E The Select IMS Environment screen (Figure 2-2 on page 2-2) is displayed.

Option 1 The System Parameters screen (Figure 2-3 on page 2-3) is displayed.

Option 2 The Print Parameters screen (Figure 2-4 on page 2-5) is displayed.

Option 3 The IMS Parameters screen (Figure 2-5 on page 2-6) is displayed.

Option 4 The Datasets Concatenations screen (Figure 2-30 on page 2-38) is displayed.

Option A The Administration menu (Figure 2-7 on page 2-11) is displayed.

Option I The Parameter Summary Information screen (Figure 2-48 on page 2-52) is displayed.

Select IMS Environment

The Select IMS Environment screen is displayed as shown in Figure 2-2 when you select option E, Select Environment, from the Parameters Selection Menu (Figure 2-1 on page 2-1) or you enter the **ENV** command. The Select IMS Environment screen displays a list of environments defined in your IXPENV load module from which you can make a selection. The current environment in effect is displayed at the top of the screen. The initial environment is set to the default environment specified by your system administrator.

Enter the S (Select) line command next to the desired environment to select the environment for processing. Enter the V (View) line command to display the environment information report.

Figure 2-2. Select IMS Environment Screen

```
File-AID for IMS --------------- Select IMS Environment -------- Row 1 from 10
COMMAND ===>                                                  SCROLL ===> CSR
ENV: DEV1 - DEVELOPMENT ENVIRONMENT WITH CONCATENATIONS

 Filter display by IMSID (* for all)       ===> *
 Retain IMS parameter (0.3) modifications  ===> Y        ( Y = Yes; N = No )

Command - Enter S to Select environment, V to View
  Name - Environment Description ---------------------------------- IMSID

_ BLPN   LIBRARIAN IN CB2 AND REGULAR CONCAT IN COB                  I610
_ CNPN   PANVALET IN CB2 AND LIBRARIAN IN COB                        I610
_ DEV1   DEVELOPMENT ENVIRONMENT WITH CONCATENATIONS                 I701
_ DEV2   DEVELOPMENT ENVIRONMENT NO CONCATENATIONS                   I610
_ LBPN   LIBRARIAN IN COB,PANVALET IN CB2 STATIC PSB ONLY            I610
_ PAN1   PANVALET IN COB,LIB IN CB2 DYN PSB ONLY                     I610
_ PNCN   PANVALET IN COB AND REGULAR CONCAT IN CB2                   I701
_ PNLB   LIBRARIAN IN CB2 AND REGULAR CONCAT IN COB                  I610
****************************** Bottom of data ********************************
```

View/Select an IMS Environment Definition

Filter display by IMSID

Enter a specific IMSID to filter the display, or enter an asterisk (*) to display definitions for all IMSIDs. File-AID for IMS displays the resulting matches in the lower list part of the screen.

Retain IMS parameter (0.3) modifications

When an environment is selected, enter **Y** to retain the IMS parameters and datasets entered on the File-AID for IMS option 3, IMS Parameters screen. Enter **N** to replace user-specified settings with environment settings.

Command

Enter the **V** (View) or **S** (Select) line command next to the desired IMS environment. If you enter the **V** (View) line command, press the END key from the report display to present an option window to print this report.

List of Matching IMS Environment Definitions

Name

Displays the name of the IMS environment.

Environment Description

Displays the text of the description field for the IMS Environment.

IMSID

Displays the IMS system ID.

System Parameters

The System Parameters screen is displayed as shown in Figure 2-3 when you select option 1, System Parameters, from the Parameters Selection Menu (Figure 2-1 on page 2-1). Use the System Parameters screen to view the installation data, change the language mode, change the data format, and indicate the type of PSB currently in effect for your File-AID for IMS/ISPF session.

Figure 2-3. System Parameters Screen

```
 File-AID for IMS  ------------  System Parameters  ---------------------------
COMMAND ===>

 Installation data:
        Release - 07.01.00
         CPU ID - 020270

 Specify general options:
   Language mode         ===> C      (C = COBOL; P = PL/I)
   Data format           ===> E      (E = EBCDIC; M = MIXED; D = DBCS)
   Dynamic or Static PSB ===> D      (D = Dynamic; S = Static)
   CAPS mode             ===> OFF    (ON or OFF)
   Codepage              ===> 0697   ( ENGLISH )
```

Installation data

Release

Displays the current File-AID for IMS release number.

CPU ID

Displays the CPU ID for the current File-AID for IMS installation.

Specify general options

Language mode

Specify the current language mode (COBOL or PL/I). If only one language is authorized at your installation, the same value (for example, C for COBOL) is always displayed and cannot be changed.

Data format

Specify how data is displayed. Any change to the data format parameter is saved from session to session and remains in effect until you change the data format parameter or use the DBCS, MIXED, or EBCDIC primary command.

If you are not using terminal type 3277KN or 3278KN from ISPF option 0 (ISPF Settings - Terminal Characteristics), the Data format field always displays **E** for EBCDIC.

Dynamic or Static PSB

Specify whether you want to use a dynamic or static PSB. Refer to "PSB Generation" on page 1-5 for the implications of using a dynamic or static PSB. You can enter the XPSB command on the BROWSE/EDIT/EXTRACT/LOAD - Data Base Specification screen to switch between static and dynamic PSB without returning to the System Parameters screen.

Note: If the environment allows only one PSB type, this field displays that type for the current PSB.

CAPS mode

Specify whether alphabetic data entered is automatically translated to uppercase (ON) or left as-is (OFF).

Codepage

Specify the code to represent the codepage translation required at your site. Valid entries are:

- **0697** - English (default)
- **0905** - Canadian Bilingual
- **0277** - Danish/Norwegian
- **0297** - France
- **0424** - Hebrew
- **0500** - Swiss French/Swiss German
- **0290** - Japanese Katakana
- **0833** - Korea
- **0838** - Thailand

Double-Byte Character Support

The data format specified on the System Parameters screen or through the DBCS, MIXED, or EBCDIC primary command affects the way your data is presented. File-AID for IMS/ISPF presents data in one of the following ways:

- Formatted using COBOL or PL/I record layouts
- Unformatted either in three-line HEX or Character format

The only time the Data Format parameter is anything other than EBCDIC is when your terminal type is set to 3277KN or 3278KN from ISPF option 0 (ISPF SETTINGS - TERMINAL CHARACTERISTICS).

Formatted Data Presentation

The data format affects the way character fields are displayed: PIC X (nn) fields in COBOL or CHAR (nn) fields in PL/I. All other formats are not affected.

When the data format is EBCDIC, File-AID for IMS assumes that all character fields contain only Single-Byte Character Set data (EBCDIC).

When the data format is MIXED, File-AID for IMS assumes all character fields contain a mixture of EBCDIC and Double-Byte Character Set (DBCS) data. The DBCS characters are enclosed with shift-out (X'0E') and shift-in (X'0F') characters.

When the data format is DBCS, File-AID for IMS assumes all character fields contain Double-Byte Character Set data. This data does not include shift-out or shift-in characters and is an even number of bytes in length.

If the data format does not match the actual data displayed, the data is shown in HEX format or marked as invalid.

Unformatted Data Presentation

When data is presented without COBOL or PL/I record layouts (three-line HEX or character format) each character line displayed is considered a character field. The format of these character fields follows the preceding rules, with the following exceptions:

- If the data format does not match the actual data displayed, the data is displayed as EBCDIC.
- If the data format is MIXED and there is an uneven or invalid sequence of shift-out and shift-in characters, the whole record is considered invalid and is displayed as EBCDIC.

Print Parameters

The Print Parameters screen is displayed as shown in Figure 2-4 when you select option 2, Print Parameters, from the Parameters Selection Menu (Figure 2-1 on page 2-1). Use the Print Parameters screen to change the maxium number of print lines per page and the spacing before detailed headers.

Figure 2-4. Print Parameters Screen

```
File-AID for IMS  ------------  Print Parameters  ----------------------------
COMMAND ===>

Specify print parameters:

  Maximum print lines per page    ===> 60  (20 - 99)
  Spacing before detailed headers ===> 2   (1 - 5; T = Top of Page)
```

Specify print parameters

Maximum Print Lines Per Page

Enter the maximum number of lines you want printed on a page. The maximum print lines per page can vary from 20 to 99.

Spacing Before Detailed Headers

Enter the number of blank lines you want before a detailed header is printed. This information is used when reports that contain repetitive information preceded by detailed heading lines (for example, the Audit Trail report) are printed. You can specify that from one to five blank lines are to appear or that each set of detailed heading lines is to be printed at the top of a new page.

IMS Parameters

The IMS Parameters screen is displayed as shown in Figure 2-5 when you select option 3, IMS Parameters, from the Parameters Selection Menu (Figure 2-2 on page 2-2). Use this screen to view/modify the current parameter information.

Note: Fields blanked out on the screen default to their associated values in the current environment load module IXPENV. All changes to the fields remain in effect and are saved from session to session. If the environment does not allow DL/I or BMP processing, that portion of the panel is blank.

If you allocate the DFSRESLB, DFSVSAMP, or RECON DDs before invoking File-AID for IMS/ISPF, it does not attempt to allocate or de-allocate them. File-AID for IMS/ISPF also does not validate the datasets that you allocated to DDs.

Figure 2-5. IMS Parameters Screen

```
File-AID for IMS ---------------- IMS Parameters ------------------------------
COMMAND ===>

Specify File-AID for IMS/ISPF IMS parameters:
  IMS VERSION RELEASE . . . 07100         (E.G. 06100 FOR IMS 6.1.0)
  DLI Checkpoint frequency  . . 00000
+ IMS RESLIB Dataset 1  . .
             Dataset 2  . .
             Dataset 3  . .
  DFSVSAMP Dataset  . . . . 'IX.UTIL.CNTL'
           Member . . . . . DFSVSAMP
  RECON Dataset 1 . . . . .
        Dataset 2 . . . . .
        Dataset 3 . . . . .
BMP PARMS: AGN  IMS6RACF  Fastpath NBA . .       OBA . .
DLI PARMS: ,0000,,,,,,,I610,,N,N,,N,,

        BUF=     SPIE= 0 TEST= 0 EXCPVR= 0 RST= 0  PRLD=    SRCH=
        CKPTID=                  MON=      LOGA=   FMTO=    IMSID= I610
        SWAP=    DBRC= N IRLM= N IRLMNM=           BKO= N
        IOB=     SSM=

RESTORE command to restore to environment defaults
```

File-AID for IMS/ISPF parameters

IMS VERSION RELEASE

Specify the version and release of IMS. The first two characters represent the version and the last three represent the release of IMS. For example, if your site has IMS 6.1.0

installed, enter **06** in the version portion of the field and **100** in the release portion of the field.

DLI Checkpoint frequency

Specify the number of database updates that are to occur between DL/I checkpoint calls during database calls.

IMS RESLIB Dataset 1, Dataset 2, and Dataset 3

Specify the DL/I IMS RESLIB dataset name(s). If your databases use HDAM randomizers, the randomizer routines must be in either IMS RESLIB Dataset 1, Dataset 2, or Dataset 3. If the routines are not in one of these datasets, IMS returns an AI status code. To use existing dynamic allocation definitions for your databases in File-AID for IMS/ISPF, the dataset name containing members created from the dynamic allocation macro, DFSMDA, must be in either IMS RESLIB Dataset 1, Dataset 2, or Dataset 3.

Note: Any RESLIBs entered here are replacements. They are not concatenated with the environment RESLIB datasets.

DFSVSAMP Dataset

Specify the partitioned dataset name assigned to the DFSVSAMP ddname. The DFSVSAMP ddname identifies IMS buffer subpools for VSAM, ISAM, and OSAM datasets. Refer to the IMS Installation Guide and the IMS Programming Reference Manual for additional information.

Member

Specify the member name in the DFSVSAMP dataset that contains the IMS buffer subpool information.

RECON Dataset 1, Dataset 2, and Dataset 3

Specify the dataset names to be used by IMS when Data Base Recovery Control (DBRC) is active. The RECON datasets should not be specified when dynamic allocation is being used. Specifying a dataset name for RECON Dataset 1 prevents DBRC from using dynamic allocation for all RECON datasets. These fields are optional.

BMP PARMS

Specify the BMP parameters to pass to DFSRRC00 (the IMS region controller). Depending on the configuration of the IMS at your installation, Application Group Name (AGN) may be required for BMP job types. Refer to your installation's procedures for executing IMS BMP jobs to determine if this field is required. Refer to the IMS/ESA System Programming Reference Manual for information on DFSRRC00 parameters.

FASTPATH NBA and/or OBA

Specify the number of Normal Buffer Allocations and/or Overflow Buffer Allocations. These entries override the default NBA and/or OBA for all BMP regions until the override is removed.

DLI PARMS

Specify the DL/I parameters to pass to DFSRRC00 (the IMS region controller). File-AID for IMS generates the "DLI, pgmname, psbname," portion of the DFSRRC00 parameters and concatenates them in front of the DL/I parameters. The DL/I parameters syntax contains 15 commas:

```
,0000,,,,,,,,,d,i,,b,,
```

where :

- d represents DBRC and can be C, Y, N, or NULL.
- i represents IRLM and can be Y, N or NULL.

– b represents BKO and can be Y, N, or NULL.

Compuware recommends that you specify **Y** in the BKO (backout) operand, available in IMS 1.3 or later. The value Y enables you to update all secondary index source segments. The value N prevents you from updating secondary index source segments for which File-AID for IMS/ISPF cannot guarantee uniqueness. Refer to the IMS System Programming Reference Manual for more information.

BUF

Specify the number of 1K blocks, for calculating OSAM subpools if IOBF is not specified in DFSVSAMP.

SPIE

Specify whether to allow SPIE established by the application program. Valid entries are 0=Allow SPIE or 1=Negate SPIE.

TEST

Specify whether to validate addresses in call list. Valid entries are 0=Do not validate or 1= Validate.

EXCPVR

Specify whether to page fix OSAM buffer pool. Valid entries are 0=Do not page fix or 1=Page fix.

RST

Specify whether to allow UCF restart. Valid entries are 0=No or 1=Yes.

PRLD

Specify the preload list suffix, DFSMPLxx.

SRCH

Specify the module search indicator. Valid entries are 0 = Standard or 1=Search JPA and LPA first.

CKPTID

Checkpoint for restart of program.

MON

IMS monitor active. Valid entries are N=No or Y=Yes.

LOGA

This field is no longer used. The logging access method (0 = BSAM; 1 = OSAM).

FMTO

Specify the dump formatting option.

IMSID

Specify the IMS Subsystem ID.

SWAP

Specify whether to use swappable address space. Valid entries are Y=Yes or N=No.

DBRC

Specify the DBRC usage. Valid entries are:

– Blank=Use your system default.
– Y=Yes, always use DBRC.
– N=No, unless system forces it with DBRC=FORCE.

IRLM

Specify the IRLM usage. Valid entries are:

- Blank=Use your system default.
- Y=Yes, use IRLM.
- N=No, don't use IRLM.

IRLMNM

Specify the IRLM subsystem name.

BKO

Specify whether to perform dynamic backout. Valid entries are N=No or Y=Yes.

IOB

This field is no longer used.

SSM

Specify the subsystem member suffix for external subsystems.

Dataset Concatenations

The View Dataset Concatenations screen is displayed as shown in Figure 2-6 when you select option 4, Datasets, from the Parameters Selection Menu (Figure 2-1 on page 2-1). The DSN command also displays this screen. This screen is display-only; you cannot edit the fields.

The list of datasets displayed is for the environment currently in effect and includes datasets from both the environment and the user's profile. The current environment in effect is displayed at the top of the screen.

You can filter this screen by DD type by entering the DD type in the Filter display by DD type field. Enter the S (Select) line command next to the DD type field to display any error messages or to recall a migrated dataset.

Figure 2-6. View Dataset Concatenations Screen

```
File-AID for IMS ---------------- View Dataset Concatenations -- Row 1 from 49
COMMAND ===>                                                  SCROLL ===> CSR
ENV: DEV1 - DEVELOPMENT ENVIRONMENT WITH CONCATENATIONS

 Filter display by DD Type (* for all) ===> *

Command - Enter S to Display Messages or Recall Migrated Datasets
  DD TYPE  Dataset Name                                  Source  Message
  -------- ---------------------------------------------- ------  --------
  IMS DBD  DBD DSNS FOR EDIT, BROWSE, INIT, LOAD & XREF
             TSOUSER2.FISAMP.DBDLIB                      USER    IXPE332
             IX.IMSTEST.DBDLIB                           ENV
  IMS PSB  PSB DSNS FOR EDIT, BROWSE, INIT, LOAD & XREF
             IX.IMSTEST.PSBLIB                           USER
             IX.BAT.PSBLIB                               ENV
             TSOUSER1.FISAMP.PSBLIB                      ENV
  IMS DBD  DBD DSNS FOR EXTRACT, FLEX & APPL. REL.
             TSOUSER4.FISAMP.DBDLIB                      USER    IXPE332
             IX.IMSTEST.DBDLIB                           ENV
  IMS PSB  PSB DSNS FOR EXTRACT, FLEX & APPL. REL.
             IX.IMSTEST.PSBLIB                           ENV
             IX.BAT.PSBLIB                               ENV
             TSOUSER5.FISAMP.PSBLIB                      ENV
  IMS ACB  ACB LIBRARIES
```

Filter display by DD Type (* for all)

Specify a DD type to limit the table display to that DD type only, or specify an asterisk (*) to display all DD types.

DD TYPE

Seventeen DD types are allowed in File-AID for IMS/ISPF. This field is display only. You cannot add new DD types. The datasets stored in the IXPENV load module for the environment always have a minimum of 17 entries, one per DD type. If all of the datasets are deleted for a particular DD type, one default entry is built for that DD type with the dataset name blank. Following is a list of DD types:

- IMS ACB - ACB library
- IMS DBD - DBD library
- IMS ESL - DB2 library
- IMS MDA - MDA library
- IMS PSB - PSB library
- IMS RES - RES library
- IMS PROC - PROC library
- COB XREF - COBOL cross-reference
- PLI XREF - PL/I cross-reference
- COB 1 - COBOL layouts 1
- COB 2 - COBOL layouts 2
- FI FLEX - FLEX command statements
- PLI 1 - PL/I layouts 1
- PLI 2 - PL/I layouts 2
- FI APPL - Application relationships
- FI SEL - Selection criteria
- IMS STEP - DBD exit routines

Dataset Name

Dataset name for this DD.

Source

Indicates where the dataset came from: environment (ENV) or user profile (USER). A value of MVS indicates the value is pre-allocated.

Message

Displays a message ID when an error is detected with the dataset. If the dataset is migrated, then the message field displays MIGRATED. When the message field is not blank, enter the S (Select) line command to view the message text of the error message. For migrated datasets, the S line command displays the MIGRATED DATASET panel and enables you to recall the dataset. If the message field is blank, then the S line command is ignored.

Administration

The File-AID for IMS – Administration menu is displayed as shown in Figure 2-7 on page 2-11 when you select option A, Administration, on the Parameters Selection Menu (Figure 2-1 on page 2-1). Depending on how File-AID for IMS/ISPF is installed, administration of the installation can be done from the product's Parameters Selection Menu and from the Install Menu, or just from the Install Menu. If administration from the Parameters Selection Menu is enabled and you have authorization, you can use the File-AID for IMS – Administration menu to view/modify IMS system and environment definitions for your site.

During the File-AID for IMS/ISPF installation, the IXPGLOBL load module that contains all of the information provided to install the product is created. Before you can select any of the four options, you must enter the name of the load library that contains the IXPGLOBL module. This information is used to initialize fields and build JCL for all of the administration options.

Figure 2-7. File-AID for IMS – Administration Menu

```
ADMIN --------------- File-AID for IMS - Administration
OPTION  ===>

Existing File-AID for IMS global parameters (IXPGLOBL):
  Load Library Name  ===> 'FILEAID.R070100.LOAD'

  1  GLOBAL         Modify global parameters (IXPGLOBL)
  2  ENVIRONMENTS   Create or modify environment definitions (IXPENV)
  3  USER EXITS     Copy or Modify user exits
  4  TRAINING       Regenerate/Modify training datasets


Enjter END to return to the previous screen




      Online technical support is available at frontline.compuware.com
      Copyright (c) 2005, Compuware Corporation, All Rights Reserved.
```

GLOBAL

The File-AID for IMS – Modify IXPGLOBL screen is displayed as shown in Figure 2-8 on page 2-12 through Figure 2-14 on page 2-15 when you select option 1, GLOBAL, from the File-AID for IMS – Administration menu (Figure 2-7 on page 2-11). This screen enables you to modify installation settings in the IXPGLOBL load module and to create sets of product customization. Modifications to the installation parameters no longer require the ISPF profile of the previous installer. All of the data gathered to install File-AID for IMS/ISPF is stored in the IXPGLOBL load module.

The information that can be modified is presented in one scrollable panel.

Figure 2-8. File-AID for IMS – Modify IXPGLOBL Screen, Part 1

```
ADMIN ------------------- File-AID for IMS - Modify IXPGLOBL ------------------
COMMAND ===>                                                  SCROLL ===> PAGE

END Command to return to the Administration Menu
ENTER Command will save changes and proceed to the ASSEMBLE IXPGLOBL screen

                                                                   More:     +
Specify File-AID for IMS product library names:
  Product load library     ===> 'IX.PUBLIC.PP070100.LOAD'
  Product message library  ===> 'IX.PUBLIC.PP070100.ISPMLIB'
  Product panel library    ===> 'IX.PUBLIC.PP070100.ISPPLIB'
  Product Skeleton library ===> 'IX.PUBLIC.PP070100.ISPSLIB'
  Product table library    ===> 'IX.PUBLIC.PP070100.ISPTLIB'
  Product PSB library      ===> 'IX.PUBLIC.PP070100.PSBLOAD'
  Product Object library   ===> 'IX.PUBLIC.PP070100.OBJECT'

Specify LE runtime library name:
  Use LINKLIST entry      ===> N             (N = No; Y = Yes)
  Load library            ===> 'CEE.SCEERUN'

Specify Archived Volume Information:
  First Archived/Migrated Volume(ARCHVOL1)  ===> MIGRAT
  Second Archived/Migrated Volume(ARCHVOL2) ===>
```

Figure 2-9. File-AID for IMS – Modify IXPGLOBL Screen, Part 2

```
ADMIN ------------------- File-AID for IMS - Modify IXPGLOBL ------------------
COMMAND ===>                                                  SCROLL ===> PAGE

END Command to return to the Administration Menu
ENTER Command will save changes and proceed to the ASSEMBLE IXPGLOBL screen

                                                                   More:   - +

Specify System storage information:
  Used by File-AID/IMS for temporary dataset allocation (DISP=(NEW,DELETE)):
    System disk temporary unit   ===> SYSDA
    Maximum blocksize for unit   ===> 32760

  Used by File-AID/IMS for cataloged dataset allocation (DISP=(NEW,CATLG)):
    System disk cataloged unit   ===> SYSDA
    System disk cataloged volume ===>

Specify Optional Interfaces:
  Source Management Product information:
    Panvalet:
      Product installed   ===> Y           (Y = Yes, N = No)
      Product in LINKLIST ===> N           (Y = Yes, N = No)
      Product version     ===> 12          (10=10, 11=11, 12=12 or later)
      Load library        ===> 'SYS2.PANVALET.V144.CAILIB'
```

Figure 2-10. File-AID for IMS – Modify IXPGLOBL Screen, Part 3

```
ADMIN ------------------- File-AID for IMS - Modify IXPGLOBL ------------------
COMMAND ===>                                                  SCROLL ===> PAGE

END Command to return to the Administration Menu
ENTER Command will save changes and proceed to the ASSEMBLE IXPGLOBL screen

                                                                   More:   - +
      Load library        ===> 'SYS2.PANVALET.V144.CAILIB'

    Librarian:
      Product installed   ===> Y           (Y=Yes,N=No)
      Product in LINKLIST ===> N           (Y=Yes,N=No)
      Load library        ===> 'SYS2.LIBR.V4R3M0.CAILIB'

  Other File-AID Product information:
    File-AID/MVS:
      Product installed   ===> Y           (Y = Yes, N = No)
      Product in LINKLIST ===> N           (Y = Yes, N = No)
      Load library        ===> 'CW.COMMON.FA.PROD.LOADLIB'

Specify whether ADMIN option should appear on the product panel:
  Allow option            ===> Y           (Y = Yes, N = No)

Specify user default settings:
```

Figure 2-11. File-AID for IMS – Modify IXPGLOBL Screen, Part 4

```
ADMIN ------------------- File-AID for IMS - Modify IXPGLOBL ------------------
COMMAND ===>                                                  SCROLL ===> PAGE

END Command to return to the Administration Menu
ENTER Command will save changes and proceed to the ASSEMBLE IXPGLOBL screen

                                                                   More:   - +
Specify user default settings:
  Language mode           ===> C     (C = COBOL; P = PL/I)
  Data format             ===> M     (E = EBCDIC; M = MIXED; D = DBCS)
  Dynamic or Static PSB   ===> D     (D = Dynamic; S = Static)
  CAPS mode               ===> ON    (ON or OFF)
  Codepage                ===> 0290
  Printed lines per page          ===> 60   (Batch Feature Printout)
  Spacing before detailed headers ===> 2    (1 - 5; T = Top of Page)

Specify SVC installation information:
  Issue SVC 83 to allow File-AID/IMS to write audit trail records to
    the SMF log file:
    Allow SMF update     ===> N          (Y=Yes,N=No)

  Use security exit database data set names option in BMP mode:
    Use option           ===> N          (Y=Yes,N=No)
```

Figure 2-12. File-AID for IMS – Modify IXPGLOBL Screen, Part 5

```
ADMIN ------------------- File-AID for IMS - Modify IXPGLOBL ------------------
COMMAND ===>                                                   SCROLL ===> PAGE

END Command to return to the Administration Menu
ENTER Command will save changes and proceed to the ASSEMBLE IXPGLOBL screen

                                                                   More:   - +

If either SVC function above = Y:
  Indicate the type and number of an SVC if required:
    Type of SVC      ===> NONE (USER = User SVC)
                               (ESR  = Extended service router SVC)
                               (NONE = Not used)

    SVC number       ===> 000  (000 = Unused, or a number between 200 and 255)
    Authorized SVC   ===>      (Y or N: Indicate if calling modules IXPSUBS and
                                        IXPEDITS must be in authorized library)
                               (Blank = Not used)
    Use existing SVC ===>      (Y = Use an existing File-AID SVC)
                               (N = Install a new File-AID/IMS SVC)
                               (Blank = Not used)

    SMF record Id    ===> 000  (000 = Unused, or a number between 128 and 255)
                                 Caution - Review SVC function requirements)
```

Figure 2-13. File-AID for IMS – Modify IXPGLOBL Screen, Part 6

```
ADMIN ------------------- File-AID for IMS - Modify IXPGLOBL ------------------
COMMAND ===>                                                   SCROLL ===> PAGE

END Command to return to the Administration Menu
ENTER Command will save changes and proceed to the ASSEMBLE IXPGLOBL screen

                                                                   More:   - +
                                 Caution - Review SVC function requirements)

If Use existing SVC = N, Specify shared SVC's with File-AID/MVS:
  Allow File-AID/MVS to rename or delete SMS datasets (SVC 26):
    Issue SVC 26     ===> N          (Y=Yes,N=No)

  Allow File-AID/MVS to allocate ISAM datasets dynamically (SVC 32):
    Issue SVC 32     ===> N          (Y=Yes,N=No)

  Required for writing File-AID for IMS or File-AID/MVS audit records to the
  system SMF log file:
    Issue SVC 83     ===> N          (Y=Yes,N=No)

  Allow access to the PCCB chain for File-AID/MVS option 0.3 (private catalog).
  Attach module FAICTLOP in supervisor state (ONLY DFP 2.3 or prior valid):
    Perform function ===> N          (Y=Yes,N=No)
```

Figure 2-14. File-AID for IMS – Modify IXPGLOBL Screen, Part 7

```
ADMIN ------------------- File-AID for IMS - Modify IXPGLOBL ------------------
COMMAND ===>                                                  SCROLL ===> PAGE

END Command to return to the Administration Menu
ENTER Command will save changes and proceed to the ASSEMBLE IXPGLOBL screen

                                                                    More:   -

  Required for writing File-AID for IMS or File-AID/MVS audit records to the
  system SMF log file:
    Issue SVC 83     ===> N          (Y=Yes,N=No)

  Allow access to the PCCB chain for File-AID/MVS option 0.3 (private catalog).
  Attach module FAICTLOP in supervisor state (ONLY DFP 2.3 or prior valid):
    Perform function ===> N          (Y=Yes,N=No)

Specify Sort information:
  Use LINKLIST entry     ===> N       ( N = No, Y = Yes)
  System SORT library    ===> 'SYS1.SORTLIB'

  External SORT utility name     ===> SORT
  SORT Output messages DDName    ===> SYSOUT
  System tape unit               ===> TAPE
```

You can modify the following information:

File-AID for IMS/ISPF Library Information

Listed below are the dataset names that were created during the File-AID for IMS installation. If you wish to replicate an File-AID for IMS installation in a different environment or modify dataset names that will be used with the product, these names can be updated on this panel. Refer to the chapter entitled Chapter 3, “Pre-Installation Procedures” in the *File-AID for IMS/ISPF Installation Guide* for more information.

Product load library

Specify the dataset name for the File-AID for IMS/ISPF load library.

Product message library

Specify the dataset name for the File-AID for IMS/ISPF message library.

Product panel library

Specify the dataset name for the File-AID for IMS/ISPF panel library.

Product Skeleton library

Specify the dataset name for the File-AID for IMS/ISPF skeleton library.

Product table library

Specify the dataset name for the File-AID for IMS/ISPF table library.

Product PSB library

Specify the dataset name for the File-AID for IMS/ISPF PSB library.

Product Object library

Specify the dataset name for the File-AID for IMS/ISPF object library.

File-AID for IMS/ISPF LE Runtime Information

Use LINKLIST entry

Specify **Y** if your runtime library is in the Linklist.

Load library

Specify the dataset name for the LE runtime library if you specified **N** in the previous field.

File-AID for IMS/ISPF Archive and Migrate Volume Information

First Archived/Migrated Volume (ARCHVOL1)

Specify the volume name for archived datasets for File-AID for IMS to use to treat datasets as archived and to present a panel to cancel recall processing. Leave blank to disable this option.

Second Archived/Migrated Volume (ARCHVOL2)

Specify the volume name for archived datasets for File-AID for IMS to use to treat datasets as archived and to present a panel to cancel recall processing. Leave blank to disable this option.

File-AID for IMS/ISPF Storage Media Information

System disk temporary unit

Specify unit to be used by File-AID for IMS for temporary dataset allocation (that is, any dataset that is created by File-AID for IMS with a disposition of (NEW,DELETE)). You can specify a device type or user-assigned group name exactly as you would when coding the UNIT= parameter in a JCL DD statement.

Maximum blocksize for unit

Specify the maximum block size (BLKSIZE=) of the smallest device that the temporary dataset could be assigned to. For example, device 3330'S MAX BLKSIZE = 13030, device 3350'S MAX BLKSIZE = 19069, and device 3380'S MAX BLKSIZE = 32760.

System disk cataloged unit

Specify the unit to be used by File-AID for IMS for cataloged dataset allocation (that is, any dataset that is created by File-AID for IMS with a disposition of (NEW,CATLG)). You can specify a device type or user-assigned group name exactly as you would when coding the UNIT= parameter in a JCL DD statement. If no unit is specified, a default unit of DISK is used.

System disk cataloged volume

Specify the VOLSER to be used by File-AID for IMS for cataloged dataset allocation. If the default of spaces is specified, the unit is processed as described above.

File-AID for IMS/ISPF Interface Information for Panvalet

Product installed

Specify **Y** if Panvalet is in use at your installation.

Product in LINKLIST

Specify **Y** if your Panvalet libraries are in the LINKLIST.

Product version

Specify the release of Panvalet currently in use at your installation.

Load library

Specify the dataset name for your Panvalet load library regardless of the LINKLIST indicator to assemble and link PAM access modules with the File-AID for IMS/ISPF Panvalet interface module.

File-AID for IMS/ISPF Interface Information for Librarian

Product installed

Specify **Y** if Librarian is in use at your installation.

Product in LINKLIST

Specify **Y** if your Librarian libraries are in the LINKLIST.

Load library

Specify the dataset name for your Librarian load library if the LINKLIST indicator is **N**.

File-AID for IMS/ISPF Interface Information for File-AID/MVS

Product installed

Specify **Y** if File-AID/MVS is installed.

Product in LINKLIST

Specify **Y** if your File-AID/MVS libraries are in the LINKLIST.

Load library

Specify the dataset name for your File-AID/MVS load library if the LINKLIST indicator is **N**.

Administration Option on File-AID for IMS/ISPF Product Panel

Allow option

Specify whether to include the Administration option on the File-AID for IMS/ISPF Parameters Selection Menu.

File-AID for IMS/ISPF User Default Settings

Language mode

Specify the user default language mode. Valid entries are C=COBOL or P=PL/I.

Data format

Specify the user default data format. Valid entries are E=EBCDIC, M=Mixed, or D=DBCS.

Dynamic or Static PSB

Specify the user default dynamic or static PSB. Valid entries are D=Dynamic or S=Static.

CAPS mode

Specify the user default CAPS mode. Valid entries are ON or OFF.

Codepage

Specify the user default Codepage. Valid entries are:

- **0697** - English (default)
- **0905** - Canadian Bilingual
- **0277** - Danish/Norwegian
- **0297** - France
- **0424** - Hebrew
- **0500** - Swiss French/Swiss German
- **0290** - Japanese Katakana
- **0833** - Korea
- **0838** - Thailand

Printed lines per page

Specify the user default print lines per page in batch. Valid entries range from 20 to 99.

Spacing before detailed headers

Specify the user default spacing for heading lines in batch. Valid entries range from one to five.

File-AID for IMS/ISPF SVC Installation

Allow SMF update

Specify whether to issue SVC83 to allow File-AID for IMS to write audit trail records to the SMF log file. Valid entries are Y=Yes or N=No.

Use option

Specify whether to use security exit database dataset names in BMP mode.

Type of SVC

Specify SVC type if you indicated Y for either of the previous two fields. Valid entries are USER=User SVC, ESR=Extended Service Router SVC, or NONE=Not used.

SVC number

Specify the type 3 or 4 user SVC number or ESROUTE SVC number assigned for use by File-AID for IMS to write audit records to the system SMF log file or to provide database dataset names to the security exit in BMP mode if you entered an SVC type in the previous field. Valid entries range from 200 to 255.

Authorized SVC

Specify whether calling modules IXPSUBS and IXPEDITS must reside in an authorized library. Valid entries are Y=Yes or N=No.

Use existing SVC

Specify whether to use an existing File-AID/MVS SVC or to install a new File-AID for IMS SVC. Valid entries are Y=Use an existing File-AID/MVS SVC or N=Install a new File-AID for IMS SVC.

SMF record Id

Specify an SMF record ID. Valid entries are 0=unused or a number in the range from 128 to 255.

Issue SVC 26

Specify whether to share SVC 26 with File-AID/MVS to rename or delete SMS datasets. Valid entries are Y=Yes or N=No.

Issue SVC 32

Specify whether to share SVC 32 with File-AID/MVS to allocate ISAM datasets dynamically. Valid entries are Y=Yes or N=No.

Issue SVC 83

Specify whether to share SVC 83 with File-AID/MVS to to write audit records to the system SMF log file. Valid entries are Y=Yes or N=No.

Perform function

Specify whether to allow access to the PCCB chain for File-AID/MVS option 0.3 (PRIVATE CATALOG). Attach module FAICTLOP in supervisor state (Valid for DFP 2.3 or prior only). Valid entries are Y=Yes or N=No.

Sort Information Used to Customize Extract and Load JCL

Use LINKLIST entry

Specify whether your Sort libraries are in the LINKLIST. Valid entries are Y=Yes or N=No.

System SORT library

Specify the dataset name for your Sort load library if you specified **N** for the previous field.

External SORT utility name

Specify the Sort utility program name.

SORT Output message DDName

Specify the external Sort output messages ddname.

System tape unit

Specify the tape unit for Sort datasets.

After you've made all your entries, press Enter at the File-AID for IMS – Modify IXPGLOBL screen (Figure 2-14 on page 2-15) to display the File-AID for IMS – Assemble IXPGLOBL screen as shown in Figure 2-15. Enter the END command if you want to exit the File-AID for IMS – Modify IXPGLOBL screen and return to the Administration menu.

Assemble IXPGLOBL

The File-AID for IMS – Assemble IXPGLOBL screen, as shown in Figure 2-15, is accessed by pressing Enter on the File-AID for IMS – Modify IXPGLOBL screen (Figure 2-14 on page 2-15). The File-AID for IMS – Assemble IXPGLOBL screen provides an option to edit, submit, and save the batch JCL generated to assemble and link an updated IXPGLOBL load module. Option 1 (Edit) and option 2 (Save) save the JCL in installation library member @FIGLOBL.

The name of the original load library specified on the Administration menu for the IXPGLOBL load module is displayed for information only.

Figure 2-15. File-AID for IMS – Assemble IXPGLOBL Screen

```
ADMIN ------------------ File-AID for IMS - Assemble IXPGLOBL
OPTION  ===>

  END Command to exit

  1  EDIT JCL   to edit the generated JCL
  2  SAVE JCL   to save JCL in 'FI.R710.INSTALL(@FIGLOBL)'
  3  SUBMIT     to submit batch job without review

Original load library:  'FI.R700.LOAD(IXPGLOBL)'

Specify linkedit information for updated IXPGLOBL:
   LIBRARY FOR IXPGLOBL   ===> 'FI.R710.LOAD'
   ASSEMBLER USED         ===> ASMA90    (ie. ASMA90 for High Level Assembler
                                          or  IEV90 for Assembler H)
Specify batch JCL information:
   SYSOUT CLASS ===> *

JOB statement information:
 ===> //TSOUSER JOB ('ACCOUNT.INFO'),'USERNAME',CLASS=L,REGION=5M,
 ===> //   MSGCLASS=X,NOTIFY=TSOUSER,MSGLEVEL=(1,1)
 ===> //*
 ===> //*
```

Specify the following information on this screen:

Linkedit Information

LIBRARY FOR IXPGLOBL

By default the name of the original load library specified on the Administration menu is used to link-edit the IXPGLOBL load module. You can specify a different load library name.

ASSEMBLER USED

Specify the Assembler program name used at your installation. Valid entries are ASM90=High Level Assembler or IEV90=Assembler H.

Batch JCL Information

SYSOUT CLASS

Specify the output class for the Assembly listing.

Job Statement Information

Enter the JOB statement and other related JCL statements. For both /*JobParm and /*Route statements.

When you've completed your entries for this screen, choose one of the following options to process the JCL:

- Option 1 – Edit the generated JCL and display an ISPF/PDF Edit screen that invokes the member that contains the JCL to run the the job. All ISPF edit commands are available for use. You can enter the SUBMIT command. Alternatively, you can use the CREATE and REPLACE primary commands to save the generated JCL into a partitioned (PDS) or sequential dataset that you can submit at a later time. To exit without processing the JCL, enter the END or CANCEL command to return to the File-AID for IMS – Assemble IXPGLOBL screen.
- Option 2 – Save the generated JCL in installation library member @FIGLOBL.
- Option 3 – Submit the generated JCL without first reviewing.

Note: This function generates JCL each time the CLIST is executed. It does not attempt to read saved members from a previous execution. You cannot use option 3 to submit previously saved JCL.

If you enter the END command to exit the File-AID for IMS – Assemble IXPGLOBL screen without generating and either submitting or saving the JCL, the File-AID for IMS – ADMIN Information Panel is displayed as shown in Figure 2-16.

Figure 2-16. File-AID for IMS – ADMIN Information Panel

```
ADMIN --------------- File-AID for IMS - ADMIN Information Panel --------------
COMMAND ===>

 ****************************** C A U T I O N ******************************

 You are about to exit without saving or submitting the JCL used to compile
 the new IXPGLOBL load module.  Pending changes will be lost if you exit.

 Enter "N" below to return to the Assemble IXPGLOBL JCL screen to generate and
 save the JCL to compile the new IXPGLOBL load module.

 Enter "Y" below to exit without saving your changes.

  Exit without saving changes  ===> N  ( Y = Yes; N = No )
```

If you keep the default setting and specify **N**, you're returned to the File-AID for IMS – Assemble IXPGLOBL screen, where you have a second opportunity to generate and submit or save the JCL. Upon completion, enter the END command to exit this screen.

If you specify **Y**, any changes you entered on the File-AID for IMS – Modify IXPGLOBL panels are lost, and you're returned to the Administration menu.

Environments

The File-AID for IMS – Environment Definition menu is displayed as shown in Figure 2-17 when you select option 2, ENVIRONMENTS, from the File-AID for IMS – Administration menu (Figure 2-7 on page 2-11). The screen summarizes the various sub-options available to you within the ENVIRONMENTS option.

Figure 2-17. File-AID for IMS – Environment Definition Menu

```
ADMIN --------------- File-AID for IMS - Environment Definition ---------------
OPTION  ===>

-------------------------------------------------------------------------------
Existing customers may use these options to CONVERT an IXPIPRMS load module:
    1  CONVERT an existing IXPIPRMS load module
    2  REVIEW  an existing IXPIPRMS then create the new module
-------------------------------------------------------------------------------
New and existing customers may
    3  CREATE  an IXPENV load module from scratch
-------------------------------------------------------------------------------
Once an IXPENV load module has been created use
    4  UPDATE to:
          ADD environments to an existing IXPENV load module
          MODIFY parameters for an existing environment
          COPY an existing environment to a new environment
          RENAME or DELETE environments
-------------------------------------------------------------------------------
  END Command to exit

      Online technical support is available at frontline.compuware.com
      Copyright (c) 2005, Compuware Corporation, All Rights Reserved.
```

Convert Existing IXPIPRMS Module

When you select option 1, CONVERT, from the File-AID for IMS – Environment Definition menu, the File-AID for IMS – Convert IXPIPRMS screen is displayed as shown in Figure 2-18 on page 2-22. This screen enables existing customers to create an IXPENV load module based on the parameter values stored in an IXPIPRMS load module created for use with a prior File-AID for IMS release.

Figure 2-18. File-AID for IMS – Convert IXPIPRMS Screen

```
ADMIN ------------------ File-AID for IMS - Convert IXPIPRMS ------------------
OPTION  ===>

  1  EDIT JCL   to edit the generated JCL
  2  SAVE JCL   to save JCL in 'FI.R710.INSTALL(@FIENV)'
  3  SUBMIT     to submit batch job without review

Enter the load library containing an existing IXPIPRMS load module:
  Load Library Name  ===> 'FI.R710.LOAD'

Specify linkedit information for updated IXPENV:
   LIBRARY FOR IXPENV     ===> 'FI.R710.LOAD'
   ASSEMBLER USED         ===> ASMA90    (ie. ASMA90 for High Level Assembler
                                          or  IEV90 for Assembler H)
Specify batch JCL information:
   SYSOUT CLASS ===>

JOB statement information:
 ===> //TSOUSER JOB ('ACCOUNT.INFO'),'USERNAME',CLASS=L,REGION=5M,
 ===> //   MSGCLASS=X,NOTIFY=TSOUSER,MSGLEVEL=(1,1)
 ===> //*
 ===> //*
END Command to exit
```

The File-AID for IMS - Convert IXPIPRMS screen provides options to edit, save, and submit JCL generated to assemble and link the IXPENV load module. Option 1 (Edit) and option 2 (Save) save JCL in installation library member @FIENV. It also is used to specify assembly and link-edit information along with SYSOUT class and job cards to be used to create the batch job stream.

Complete the following fields on the File-AID for IMS – Convert IXPIPRMS screen:

Library Containing an Existing IXPIPRMS load module

Load Library Name

Specify the load library containing the existing IXPIPRMS load module you want to convert.

Linkedit Information

LIBRARY FOR IXPENV

Specify the load library name to link-edit the IXPENV load module. This field defaults to the File-AID for IMS/ISPF load library unless you specify another library name.

ASSEMBLER USED

Specify the Assembler program name used at your installation. For example, ASM90 for High Level Assembler or IEV90 for Assembler H.

Batch JCL Information

SYSOUT CLASS

Enter the output class for the Assembly listing.

Job Statement Information

Enter the JOB statement and other related JCL statements. For both /*JobParm and /*Route statements.

When you've completed your entries for this screen, choose one of the following options to process the JCL:

- Option 1 – Edit the generated JCL and display an ISPF/PDF Edit screen that invokes the member that contains the JCL to run the the job. All ISPF edit commands are available for use. You can enter the SUBMIT command. Alternatively, you can use the CREATE and REPLACE primary commands to save the generated JCL into a partitioned (PDS) or sequential dataset that you can submit at a later time. To exit without processing the JCL, enter the END or CANCEL command to return to the File-AID for IMS – Convert IXPIPRMS screen.
- Option 2 – Save the generated JCL in installation library member @FIENV.
- Option 3 – Submit the generated JCL without first reviewing.

Note: This function generates JCL each time the CLIST is executed. It does not attempt to read saved members from a previous execution. You cannot use option 3 to submit previously saved JCL.

If you enter the END command to exit the File-AID for IMS – Assemble IXPGLOBL screen without generating and either submitting or saving the JCL, the File-AID for IMS – ADMIN Information Panel is displayed as shown in Figure 2-16 on page 2-21.

If you keep the default setting and specify **N**, you're returned to the File-AID for IMS – Convert IXPIPRMS screen, where you have a second opportunity to generate and submit or save the JCL. Upon completion, enter the END command to exit this screen.

If you specify **Y**, any entries that you made entered on the File-AID for IMS – Convert IXPIPRMS screen are lost, and you're returned to the File-AID for IMS – Environment Definition menu Figure 2-17 on page 2-21.

Review Existing IXPIPRMS and Create New IXPENV Module

When you select option 2, REVIEW, from the File-AID for IMS – Environment Definition menu, the File-AID for IMS – Review IXPIPRMS screen is displayed as shown in Figure 2-19. This screen enables existing customers to create an IXPENV load module based on the parameter values stored in an IXPIPRMS load module created for use with a prior File-AID for IMS release. You can then add additional environments, or you can modify or delete those created from the conversion process.

Figure 2-19. File-AID for IMS – Review IXPIPRMS

```
ADMIN --------------- File-AID for IMS - Review IXPIPRMS ---------------------
COMMAND ===>

Enter the load library containing an existing IXPIPRMS load module:
  Load Library Name  ===>

Enter the load library to contain the new IXPENV load module:
  Load Library Name  ===>

 END Command to exit
```

Complete the following fields on the File-AID for IMS – Review IXPIPRMS screen:

Library containing an existing IXPIPRMS

Load Library Name

Specify the load library containing the existing IXPIPRMS load module you want to review.

Library to containing new IXPENV

Load Library Name

Specify the load library to contain the new IXPENV load module.

When you press Enter and if no errors are detected, the File-AID for IMS – Select Environment screen is displayed as shown in Figure 2-20 on page 2-25.

Select Environment

The File-AID for IMS – Select Environment screen as shown in Figure 2-20 displays a list of environments and control Add, Change, Delete, Copy, and Rename functions. You access this screen from the File-AID for IMS – Environment Definition menu (Figure 2-17 on page 2-21). If you select option 2 – REVIEW or option 4 – UPDATE the screen displays a list of environments. This list can be processed using any of the listed line commands. You can also add a new environment at this time.

If an IXPIPRMS module was converted that had BMP table entries, the display list contains the environment name from the old BMP ID, a default description of CONVERTED IPRMS BMP ENTRY, and IMSID. You can change the Environment Description on the display list.

If your IXPIPRMS load module did not have any BMP table entries, one default environment is built called DFLT with a default description of DEFAULT ENVIRONMENT CREATED FROM IPRMS WITH NO BMP ENTRIES and a default IMSID of NONE. The default environment consists of information in the fixed portion of the IXPIPRMS load module. You can change the Environment Description on the display list.

If you access the File-AID for IMS – Select Environment screen by selecting option 3 – CREATE from the File-AID for IMS – Environment Definitions menu, no environments

are listed. You must create an environment before any of the listed line commands can be used.

To add a new environment enter the name of the new environment in the field labeled Enter a name to add a new environment.

Figure 2-20. File-AID for IMS – Select Environment Screen

```
ADMIN ------------- File-AID for IMS - Select Environment ------- Row 1 from 2
COMMAND ===>                                                  SCROLL ===> CSR

END Command to exit
Enter  a name to add a new environment     ===>        or
Filter display by environment (* for all)  ===> *      or
Filter display by IMSID (* for all)        ===> *      or
Change the default environment             ===>        or

Use line commands:  S to Modify, D to Delete, C to Copy, R to Rename
   Old  New
   Name Name Environment Description                                   IMSID
 - ---- ---- ------------------------------------------------------- -----
   DEV1      CONVERTED IPRMS BMP ENTRY                                I610
   IMS7      CONVERTED IPRMS BMP ENTRY                                I701
 ****************************** Bottom of data ********************************
```

Upper, Fixed Portion of Screen

Enter a name to add a new environment

To add a new environment, enter the name of an environment that does not already exist in the IXPENV load module.

Filter display by environment (* for all)

This field is a filter to limit the display of environments by environment name. Valid entries are a four-character identifier to limit the display to a single environment name, a partial environment name plus an asterisk (*) to limit the display to a subset of environment names, or an asterisk only (*) to display all environment names.

Filter display by IMSID (* for all)

This field is a filter to limit the display of environments by IMSID. Valid entries are a four-character ID to limit the display to a single IMSID, a partial IMSID plus an asterisk (*) to limit the display to a subset of IMSIDs, or an asterisk only (*) to display all IMSIDs.

Change the default environment

This required field specifies which environment is to be used when the user does not select any environment. The default environment allows a user to function in File-AID for IMS/ISPF without selecting an environment. When converting an old IXPIPRMS load module, the default environment is set to the first BMP table entry. If there are no BMP entries, the default environment is set to DFLT. You can change this value to any defined environment.

Lower, Variable Portion of Screen

Table display of defined environments

Whether File-AID for IMS displays a table of defined environments on the Select Environment screen depends on the following scenarios:

- If you accessed the File-AID for IMS – Select Environment screen after selecting option 2 – REVIEW or option 4 – UPDATE on the File-AID for IMS – Environment

Definition menu (Figure 2-17 on page 2-21), a list of defined environments is displayed, showing the environment name, description, and IMSID. You can select an environment from the list to modify as described in "Modify Existing Environment Definition", or add a new environment as described in "Create New IXPENV Module" below.

- If you accessed the File-AID for IMS – Select Environment screen after selecting option 3 – CREATE , no list of environments is displayed, and you can only add a new environment as described in "Create New IXPENV Module" on page 2-26.

Modify Existing Environment Definition

If you accessed the File-AID for IMS – Select Environment screen after selecting option 2 – REVIEW or option 4 – UPDATE on the File-AID for IMS – Environment Definition menu (Figure 2-17 on page 2-21), a list of defined environments displays in the lower portion of the File-AID for IMS – Select Environment screen (Figure 2-20 on page 2-25). You can use the following line commands:

- S (Select) – Select an existing environment definition from the displayed list by entering S to the left of the New Name field.
- D (Delete) – Delete an existing environment definition from the displayed list by entering D to the left of the New Name field.
- C (Copy) – Copy an existing environment definition from the displayed list by typing C to the left of the Old Name field and entering a new name in the New Name field.
- R (Rename) – Rename an existing environment definition from the displayed list by typing R to the left of the Old Name field and entering a new name in the New Name field.

You can modify an existing environment definition by selecting an existing defined environment from the list on the File-AID for IMS – Select Environment screen. The File-AID for IMS – Modify Environment menu is displayed as shown in Figure 2-22 on page 2-28. Refer to "Using the Modify Environment Menu" on page 2-27 for details about this screen.

Create New IXPENV Module

When you select option 3 – CREATE on the File-AID for IMS – Environment Definition menu (Figure 2-17 on page 2-21), the File-AID for IMS – Create IXPENV screen is displayed as shown in Figure 2-21.

Figure 2-21. File-AID for IMS – Create IXPENV Screen

```
ADMIN --------------- File-AID for IMS - Create IXPENV ------------------------
COMMAND ===>

Enter the load library to contain the new IXPENV load module:
  Load Library Name  ===> 'FI.DEVLP.LOAD'

 END Command to exit
```

Enter the name of the load library to contain the IXPENV load module. If an IXPENV load module already exists in that library, you're asked to confirm that it's OK to replace it.

If no errors are detected, the File-AID for IMS - Select Environment panel is displayed. No list of environments is displayed on this screen, and you can only add a new environment definition.

To add a new environment definition, enter a unique environment name in the field labeled Enter a name to add a new environment. The File-AID for IMS – Modify System Parameters screen is displayed as shown in Figure 2-23 on page 2-29. Refer to "Option 1 – IMS System Parameters" on page 2-28 for an explanation about completing this screen.

Using the Modify Environment Menu

The File-AID for IMS – Modify Environment menu is displayed as shown in Figure 2-22 on page 2-28 when you select an existing environment from the list on the File-AID for IMS – Select Environment screen (Figure 2-20 on page 2-25) to modify.

Figure 2-22. File-AID for IMS – Modify Environment Menu

```
ADMIN ------------------ File-AID for IMS - Modify Environment ----------------
OPTION  ===>
ENV: DEV1 - CONVERTED IPRMS BMP ENTRY

  1  IMS System   IMS system parameters
  2  DLI Parms    DLI parameters
  3  BMP Parms    BMP parameters
  4  ACB Parms    ACB parameters
  5  Datasets     Dataset concatenations
  A  All Parms    Process options 1 through 5 in sequence









END to terminate processing of environment DEV1
CANCEL to return to Select Environment panel
```

The File-AID for IMS – Modify Environment menu displays the environment name and description at the top of the screen for the update request. You can enter the option number to modify a particular subset of environment information only, or you can enter option A – All Parms to step through all of the option screens.

The sequence of option screens displayed depends on the BMP processing allowed indicator on the File-AID for IMS – Modify System Parameters screen (Figure 2-24 on page 2-29). If this value is set to Y, then screens for all 5 options are displayed. If this indicator is set to N, then the BMP Parameters and ACB Parameters screens are not displayed. This information is not required for DL/I processing.

Use the Down (PF8) and Up (PF7) keys to scroll to the second screen of an option. Press Enter to save and process your updates and to move to the next option. Use the END command to return to the previous screen.

After completing all updates for all options, use the END command to return to the File-AID for IMS – Modify Environment menu (Figure 2-22 on page 2-28).

Option 1 – IMS System Parameters

If you enter option 1 or A on the File-AID for IMS – Modify Environment menu, the File-AID for IMS – Modify System Parameters screen as shown in Figure 2-23 on page 2-29 is displayed. You can also access this screen by entering a unique environment name in the field labeled Enter a name for a new environment on the File-AID for IMS – Select Environment screen. Modify or complete the fields on the File-AID for IMS – Modify System Parameters screen as desired. Refer to the field descriptions beginning on page 2-29.

Press the Down (PF8) and Up (PF7) keys to move between the screens. Press Enter to save your changes and to continue to the other Modify Environment menu options.

Figure 2-23. File-AID for IMS – Modify System Parameters, Part 1

```
ADMIN -------------- File-AID for IMS - Modify System Parameters --------------
COMMAND ===>                                                   SCROLL ===> CSR

END Command to return to previous screen
ENTER Command to continue
                                                                   More:     +
Specify Environment Description:
  Name        ===> IMS7
  Description ===> CONVERTED IPRMS BMP ENTRY

Specify General IMS Information:
  IMSID                            ===> I701
  IMS version release              ===> 08100   ( E.G. 08100 for IMS 8.1.0 )
  Region Controller Program name   ===> DFSRRC00
  File-AID for IMS PSBLIB ===> 'FI.IMSTEST.PSBLIB'

Specify DLI Processing Datasets:
  DFSVSAMP Dataset  ===> 'FI.PUBLIC.CNTL'
           Member   ===> DFSVSAMP

  Specify RECON Datasets only to disable allocation by IMS
    RECON Dataset 1   ===>
    RECON Dataset 2   ===>
    RECON Dataset 3   ===>
```

Figure 2-24. File-AID for IMS – Modify System Parameters, Part 2

```
ADMIN -------------- File-AID for IMS - Modify System Parameters --------------
COMMAND ===>                                                   SCROLL ===> CSR

END Command to return to previous screen
ENTER Command to continue
                                                                   More:   -
Specify Processing Options:
  PSB processing allowed ===> A       ( D = Dynamic;  S = Static;   A = All )
  BMP processing allowed ===> Y       ( N = No; Y = Yes )

Specify Default Settings:
  DLI Checkpoint interval frequency ===> 00050   ( used in load option )
  Audit trail dependent segments    ===> ALL     ( ALL or 0 - 32767 )

Specify Limit Information For Find/Change Command:
  Allow CHANGE command              ===> Y       ( N = No; Y = Yes )
  Allow CHANGE ALL command          ===> Y       ( N = No; Y = Yes )
  Max database segments to search   ===> 0000000000 ( 0 = No limit )

Specify options for BMP execution:
  Wait limit       ===> 30      ( Specify value from 00 to 99 )
  Sync check limit ===> 10      ( Specify value from 00 to 99 )
  Integrity check  ===> Y       ( N = No; Y = Yes )
```

The following section describes the fields on the File-AID for IMS – Modify System Parameters screen:

Environment Description

Name

This field is view only and is the environment name that is unique for the entire IXPENV load module and that was either selected from or specified on the Select IMS Environment screen (Figure 2-2 on page 2-2).

Description

Specify a maximum 60-character, free-format environment description.

General IMS Information

IMSID

This value is used strictly as a filter on the File-AID for IMS – Select Environment screen (Figure 2-20 on page 2-25) to limit the display of environments.

IMS version release

Specify the version and release of IMS.

Region Controller Program name

Specify the name of the program to which File-AID for IMS/ISPF attaches to invoke IMS. This program is usually DFSRRC00. A substituted program name must reside in a dataset that is allocated to DFSRESLB.

File-AID for IMS PSBLIB

The dataset name of the PSBLIB of File-AID for IMS PSBs needed when dynamic PSB processing is used in a BMP region.

DL/I Processing Datasets

DFSVSAMP Dataset

Specify the partitioned dataset name assigned to the DFSVSAMP ddname. The DFSVSAMP ddname identifies IMS buffer subpools for VSAM, ISAM, and OSAM datasets. Refer to the IMS Installation Guide and the IMS System Programming Reference Manual for additional information.

Member

Specify the member name for the DFSVSAMP dataset. You can use the GENERATE option to generate sample VSAM buffer pool statements into this member.

RECON Dataset 1, 2, and 3

Specify the RECON datasets, which are KSDS datasets used by DBRC for recovery control. They contain registration information for all IMS databases.

Notes:

1. Enter RECON dataset names only if you want to use RECONs that are different from those that would otherwise be used by IMS.
2. Dataset names entered here are overridden by RECON dataset names entered on the IMS Parameters panel (option 0.3).

Processing Options

PSB processing allowed

Specify whether dynamic or static PSB processing or both is allowed within the environment. Valid entries are D=Dynamic, S=Static, and A=All.

BMP processing allowed

Specify whether BMP processing is allowed within the environment. Valid entries are N=No or Y=Yes.

Default Settings

DLI checkpoint frequency interval

Specify the default number of database updates that occur between DL/I checkpoint calls during batch database loads.

Audit trail dependent segments

Specify the number of deleted dependent segments to be captured by the Audit Trail feature when it is activated during a database edit session. Indicate the maximum number of deleted dependent segment images you want written to the Audit Trail file for a given deleted parent. Valid entries are All or any number in the range 0 through 32,767.

Limit Information for Find/Change Command

Allow CHANGE command

Specify to allow CHANGE command for a FIND/CHANGE . Valid entries are N=No or Y=Yes.

Allow CHANGE ALL command

Allow CHANGE ALL command for a FIND/CHANGE. Valid entries are N=No or Y=Yes.

MAX database segments to search

Specify the maximum number of database segments to search if a user does not specify a value when using the FIND/CHANGE command. Specify **0** to set no limit.

Options for BMP Execution (Required only if you specified Y for BMP processing allowed)

Wait limit

Specify the maximum time a BMP user can be in a wait state (no activity from the terminal). When exceeded, the BMP task is ended. Compuware recommends that the time should be less than the TSO wait time limit to avoid a timeout (522 ABEND) while the BMP region is active. Valid entries are in the range from 0 to 59 minutes. If WAITLMT is set to 0, no File-AID for IMS timeout occurs. The default value is 30 minutes.

Sync check limit

Specify the time interval to perform a check of the IMS (BMP) region for shutdown when there is no user activity. If the online region is shutting down, the File-AID for IMS task ends. Valid entries are in the range from 0 to 59 minutes. If SYNCKLMT is set to 0, no check is made. The default value is 10 minutes.

Integrity check

Specify whether to check the segment for a change by a concurrent user prior to replace. Valid entries are N=No (replace as is) or Y=Yes.

After you complete modifying or making entries for all the fields, press Enter to save your inputs and to move to the next File-AID for IMS – Modify Environment menu option.

Option 2 – DL/I Parameters

You can access the File-AID for IMS – Modify DLI Parameters screen, shown in Figure 2-25 and Figure 2-26 on page 2-32, in one of the following ways:

- Select option 2 – DLI Parms from the Modify Environment menu.
- Press Enter after you complete your entries on the File-AID for IMS – Modify System Parameters screen (Figure 2-24 on page 2-29) if you're creating a new environment definition.
- Press Enter after you complete your entries on the File-AID for IMS – Modify System Parameters screen (Figure 2-24 on page 2-29) if you're modifying an existing environment definition and you selected option A – All Parms on the File-AID for IMS – Modify Environment menu (Figure 2-22 on page 2-28).

Figure 2-25. File-AID for IMS – Modify DLI Parameters Screen, Part 1

```
ADMIN ---------------- File-AID for IMS - Modify DLI Parameters ---------------
COMMAND ===>                                                   SCROLL ===> CSR
ENV: DEV1 - DEVELOPMENT ENVIRONMENT WITH CONCATENATIONS

END Command to return to previous screen
ENTER Command to continue

  DLI PARMS ===> ,0000,,,,,,,I810,,N,N,,N,,,,

                                                                   More:     +
Specify DLI Parms:
  BUF     ===>                (Numeric)
  SPIE    ===> 0              ( 0 or 1 )
  TEST    ===> 0              ( 0 or 1 )
  EXCPVR  ===> 0              ( 0 or 1 )
  RST     ===> 0              ( 0 or 1 )
  PRLD    ===>                (Alphanumeric)
  SRCH    ===>                ( 0 or 1 )
  CKPTID  ===>                (Alphanumeric)
  MON     ===>                ( Y = Yes; N = No )
  LOGA    ===>                ( 0 or 1 )
  FMTO    ===>                (Alphanumeric)
  IMSID   ===> I810           (Alphanumeric)
  SWAP    ===>                ( Y = Yes; N = No )
```

Figure 2-26. File-AID for IMS – Modify DLI Parameters Screen, Part 2

```
ADMIN ---------------- File-AID for IMS - Modify DLI Parameters ---------------
COMMAND ===>                                                   SCROLL ===> CSR
ENV: DEV1 - DEVELOPMENT ENVIRONMENT WITH CONCATENATIONS

END Command to return to previous screen
ENTER Command to continue

  DLI PARMS ===> ,0000,,,,,,,I810,,N,N,,N,,,,

                                                                   More:   -
  MON     ===>                ( Y = Yes; N = No )
  LOGA    ===>                ( 0 or 1 )
  FMTO    ===>                (Alphanumeric)
  IMSID   ===> I810           (Alphanumeric)
  SWAP    ===>                ( Y = Yes; N = No )
  DBRC    ===> N              ( Y = Yes; N = No; Blank is default)
  IRLM    ===> N              ( Y = Yes; N = No; Blank is default)
  IRLMNM  ===>                (Alphanumeric)
  BKO     ===> N              ( Y = Yes; N = No )
  SSM     ===>                (Alphanumeric)
  LOCKMAX ===>                (Numeric)
  GSGNAME ===>                (Alphanumeric)
  TMINAME ===>                (Alphanumeric)
```

The following section describes the fields on the File-AID for IMS – Modify DLI Parameters screen:

DLI PARMS

DL/I parameters are passed to DFSRRC00 (the IMS region controller). File-AID for IMS/ISPF generates REGIONTYPE, PGMNAME, and PSBNAME and concatenates them in front of your parameters. This field is display only and reflects the values specified in the individual fields below.

BUF

Specify the number of 1K blocks for calculating OSAM Subpools if IOBF is not specified in DFSVSAMP.

SPIE

Specify whether to allow SPIE established by the application program. Valid entries are 0=allow SPIE or 1=negate SPIE.

TEST

Specify whether to validate addresses in the call list. Valid entries are 0=do not validate or 1=validate .

EXCPVR

Specify whether to page fix OSAM buffer pool. Valid entries are 0=do not page fix or 1=page fix.

RST

Specify whether to UCF restart. Valid entries are 0=no or 1=yes.

PRLD

Specify whether to pre-load the list suffix, DFSMPLxx.

SRCH

Specify the module search indicator. Valid entries are 0=standard or 1=search JPA and LPA first.

CKPTID

Specify the checkpoint for restart of program.

MON

Specify whether IMS is to monitor activity. Valid entries are N=no or Y=yes.

LOGA

Specify the logging access method. Valid entries are 0=BSAM or 1=OSAM. No longer used.

FMTO

Specify the dump formatting option.

IMSID

Specify the IMS subsystem ID.

SWAP

Specify whether to allow swappable address space. Valid entries are Y=yes or N=no.

DBRC

Specify whether to use DBRC. Valid entries are blank=use your system default; Y=always use DBRC; or N=no, unless system forces it with DBRC=FORCE.

IRLM

Specify whether to use IRLM. Valid entries are Y=yes or N=no.

IRLMNM

Specify the IRLM subsystem name.

BKO

Specify whether to perform dynamic backout. Valid entries are N=no or Y=yes.

SSM

Specify the subsystem member suffix for external subsystems.

LOCKMAX

Specify the locking limit overrides for PSB LOCKMAX. Valid entries are 0=none; or 1 through 32,767=locks in units of 1,000.

GSGNAME

Specify the global service group name.

TMINAME

Specify the transport manager instance name.

Option 3 – BMP Parameters

You can access the File-AID for IMS – Modify BMP Parameters screen, shown in Figure 2-27 and Figure 2-28 on page 2-35, in one of the following ways:

- Select option 3 – BMP Parms from the File-AID for IMS – Modify Environment menu (Figure 2-22 on page 2-28).
- Press Enter after you complete your entries on the File-AID for IMS – Modify DLI Parameters screen (Figure 2-26 on page 2-32) if you're creating a new environment definition with BMP entries.
- Press Enter after you complete your entries on the File-AID for IMS – Modify DLI Parameters screen (Figure 2-26 on page 2-32) if you're modifying an existing environment definition with BMP entries and you had selected option A – All Parms on the File-AID for IMS – Modify Environment menu (Figure 2-22 on page 2-28).

Figure 2-27. File-AID for IMS – Modify BMP Parameters, Part 1

```
ADMIN ---------------- File-AID for IMS - Modify BMP Parameters ---------------
COMMAND ===>                                                 SCROLL ===> CSR
ENV: DEV1 - DEVELOPMENT ENVIRONMENT WITH CONCATENATIONS

END Command to return to previous screen
ENTER Command to continue

  BMP PARMS ===> ,,N00000,,,,1,,0000,0000,,IMS6RACF,,,,

                                                                  More:     +
Specify BMP Parms:
  IN      ===>               (Alphanumeric)
  OUT     ===>               (Alphanumeric)
  OPT     ===> N             ( N , W or C )
  SPIE    ===> 0             ( 0 or 1 )
  TEST    ===> 0             ( 0 or 1 )
  DIRCA   ===> 000           (Numeric)
  PRLD    ===>               (Alphanumeric)
  STIMER  ===>               ( 0 or 1 )
  CKPTID  ===>               (Alphanumeric)
  PARDLI  ===> 1             ( 0 or 1 )
  CPUTIME ===>               (Numeric)
  NBA     ===> 0000          (Numeric)
  OBA     ===> 0000          (Numeric)
```

Figure 2-28. File-AID for IMS – Modify BMP Parameters, Part 2

```
ADMIN ---------------- File-AID for IMS - Modify BMP Parameters ---------------
COMMAND ===>                                                   SCROLL ===> CSR
ENV: DEV1 - DEVELOPMENT ENVIRONMENT WITH CONCATENATIONS

END Command to return to previous screen
ENTER Command to continue

  BMP PARMS ===> ,,N00000,,,,1,,0000,0000,,IMS6RACF,,,,

                                                                   More:   -
  DIRCA   ===> 000           (Numeric)
  PRLD    ===>               (Alphanumeric)
  STIMER  ===>               ( 0 or 1 )
  CKPTID  ===>               (Alphanumeric)
  PARDLI  ===> 1             ( 0 or 1 )
  CPUTIME ===>               (Numeric)
  NBA     ===> 0000          (Numeric)
  OBA     ===> 0000          (Numeric)
  IMSID   ===>               (Alphanumeric)
  AGN     ===> IMS6RACF      (Alphanumeric)
  SSM     ===>               (Alphanumeric)
  PREINIT ===>               (Alphanumeric)
  ALTID   ===>               (Alphanumeric)
  LOCKMAX ===>               (Numeric)
```

The following section describes the fields on the File-AID for IMS – Modify BMP Parameters screen:

BMP PARMS

BMP parameters are passed to DFSRRC00 (the IMS region controller). File-AID for IMS/ISPF generates REGIONTYPE, PGMNAME, and PSBNAME and concatenates them in front of your parameters. This field is display only and reflects the values specified in the individual fields below.

IN

Specify the input transaction code.

OUT

Specify the output transaction code.

OPT

Specify which option to enable when the IMSID or ALTID system is not available. Valid entries are N=ask operator, W=Wait, or C=Cancel.

SPIE

Specify whether to allow SPIE established by the application program. Valid entries are 0=no or 1=yes.

TEST

Specify whether to validate addresses in the call list. Valid entries are 0=do not validate or 1=validate.

DIRCA

Specify the dependent region interregion communication area size.

PRLD

Specify whether to pre-load the list suffix, DFSMPLxx.

STIMER

Specify whether to gather processor time statistics. Valid entries are 0=No or 1=Yes.

CKPTID

Specify the checkpoint for the restart of the program.

PARDLI

Specify whether the parallel DL/I option is enabled. Valid entries are 0=enabled or 1=disabled.

CPUTIME

Specify the task timing option. Valid entries are 0=none or 1 through 1440=maximum time in minutes.

NBA

Specify the initial number of fast path buffers for DEDB.

OBA

Specify the overflow number of fast path buffers for DEDB.

IMSID

Specify the IMS subsystem ID.

AGN

Specify the application group name.

SSM

Specify the subsystem member suffix for external subsystems.

PREINIT

Specify the pre-initialization list suffix, DFSINTxx.

ALTID

Specify the alternate IMS system.

LOCKMAX

Specify the locking limit, which overrides PSB LOCKMAX. Valid entries are 0=none or 1through 32,767. This value locks in units of 1,000.

Option 4 – ACB Parameters

You can access the File-AID for IMS – Modify ACB Parameters screen, shown in Figure 2-29 on page 2-37, in one of the following ways:

- Select option 4 – ACB Parms from the File-AID for IMS – Modify Environment menu (Figure 2-22 on page 2-28).
- Press Enter after you complete your entries on the File-AID for IMS – Modify BMP Parameters screen (Figure 2-28 on page 2-35) if you're creating a new environment definition with BMP entries.
- Press Enter after you complete your entries on the File-AID for IMS – Modify BMP Parameters screen (Figure 2-28 on page 2-35) if you're modifying an existing environment definition with BMP entries and you had selected option A – All Parms on the File-AID for IMS – Modify Environment menu (Figure 2-22 on page 2-28).

Figure 2-29. File-AID for IMS – Modify ACB Parameters Screen

```
ADMIN ---------------- File-AID for IMS - Modify ACB Parameters ---------------
COMMAND ===>                                                   SCROLL ===> CSR
ENV: DEV1 - DEVELOPMENT ENVIRONMENT WITH CONCATENATIONS

END Command to return to previous screen
ENTER Command to continue

Specify ACB Information:
  ACBNAME Prefix          ===> FAIMS
  Number of ACB Names     ===> 0005        (Maximum concurrent BMP users)

  Reset ACBLIB indicator  ===> Y           ( Y = Yes; N = No )
  DOPT ACBLIB             ===> 'IX.IMS810.DOPT.PUBLIC.ACBLIB'

  *** These ACBs must be defined to the IMS system before use   ***
  *** The DOPT ACBLIB must be in the ACBLIB concatenation       ***
```

The following section describes the fields on the File-AID for IMS – Modify ACB Parameters screen:

ACBNAME Prefix

Specify the ACBNAME prefix, which is any one- to five-character string to be used to construct the ACBNAMEs. The ACBNAMEs that are used contain the ACBNAME prefix followed by a three digit number (000-999). For example:

```
FAIMS000, FAIMS001, .... FAIMS(nnn-1)
```

where FAIMS is the prefix and nnn is the number of ACBNAMEs.

Number of ACB Names

Because an ACBNAME is required for each concurrent BMP user of File-AID for IMS/ISPF, specify a number high enough to satisfy all simultaneous BMP users.

Reset ACBLIB Indicator

Specify whether to have File-AID for IMS automatically reset (empty) the DOPT ACBLIB dataset. Valid entries are Y=yes or N=no. Specifying **Y** causes the directory of the dataset to be reset to an empty state prior to writing out the new ACB. Specify **Y** only if File-AID for IMS/ISPF has exclusive use of that dataset.

DOPT ACBLIB

Specify the DOPT ACB library dataset name to contain File-AID for IMS's dynamically created ACBs. This is a required library that you may need to allocate yourself. The attributes of the dataset should match those of the static ACBLIB. After creating the dataset, ensure that it is concatenated last on the IMSACBA and IMSACBB DD cards of the JCL that is used to start the IMS control region.

This dataset can be shared with other products, but to greatly reduce maintenance on this library, Compuware recommends that it be assigned exclusively to File-AID for IMS. This library is used to dynamically create any ACBs that are required by the users.

Option 5 – Dataset Concatenations

You can access the File-AID for IMS – Dataset Concatenation screen, shown in Figure 2-30, in one of the following ways:

- Select option 5 – Datasets from the File-AID for IMS – Modify Environment menu (Figure 2-22 on page 2-28).
- Press Enter after you complete your entries on the File-AID for IMS – Modify ACB Parameters screen (Figure 2-29 on page 2-37) if you're creating a new environment definition with BMP entries.
- Press Enter after you complete your entries on the File-AID for IMS – Modify DLI Parameters screen (Figure 2-26 on page 2-32) if you're creating a new environment definition without BMP entries.
- Press Enter after you complete your entries on the File-AID for IMS – Modify ACB Parameters screen (Figure 2-29 on page 2-37) if you're modifying an existing environment definition with BMP entries and you had selected option A – All Parms on the File-AID for IMS – Modify Environment menu (Figure 2-22 on page 2-28).
- Press Enter after you complete your entries on the File-AID for IMS – Modify DLI Parameters screen (Figure 2-29 on page 2-37) if you're modifying an existing environment definition without BMP entries and you had selected option A – All Parms on the File-AID for IMS – Modify Environment menu (Figure 2-22 on page 2-28).

The File-AID for IMS – Dataset Concatenation screen enables you to specify datasets for the specified ddnames. File-AID for IMS/ISPF supports the MVS limit of 114 datasets per ddname or 120 Extents. The environment name and description is displayed at the top of the screen for the Add or Update request.

Figure 2-30. File-AID for IMS – Dataset Concatenation Screen

```
ADMIN ------------- File-AID for IMS - Dataset Concatenation Row 1 to 15 of 23
COMMAND ===>                                                 SCROLL ===> CSR
ENV: DEV1 - DEVELOPMENT ENVIRONMENT WITH CONCATENATIONS

END Command to return to Modify Environment screen

I to Insert, D to Delete, R to Repeat, S to Expand error msg or Recall

  DD TYPE  Dataset Name                                    Concat No.  Message
  -------- ------------------------------------------------ ----------  --------
  IMS ACB  'FI.IMSTEST.ACBLIB'                              0010
  IMS ACB  'FI.IMSTEST.ACBLIBA'                             0020
  COB 2                                                     0010
  COB 1    'FI.IMSTEST.FISAMP.COBOLLIB'                     0010
  IMS DBD  'FI.IMSTEST.DBDLIB'                              0010
  IMS DBD  'FI.PUBLIC.FISAMP.DBDLIB'                        0020
  IMS ESL  'DB2.PROD.LOAD'                                  0010
  IMS ESL  'DB2.SDSNLOAD'                                   0020
  FI  FLEX 'FI.PUBLIC.FISAMP.JCL'                           0010
  IMS MDA  'FI.DEVLP.LOAD'                                  0010
  IMS MDA  'TSOUSER.DEVLP.LOAD'                             0020
  PLI 1    'FI.PUBLIC.FISAMP.PLILIB'                        0010
  PLI 2                                                     0010
  IMS PSB  'FI.IMSTEST.PSBLIB'                              0010
```

You can enter the listed line commands to the left of any DD TYPE on the File-AID for IMS – Dataset Concatenation screen to do the following:

- **I (Insert):** Inserts a blank line after the selected DD TYPE.
- **D (Delete):** Deletes the selected dataset.
- **R (Repeat):** Repeats the selected line.

- **S (Select):** Selects the message text for viewing if the Message field is not blank, or recalls the dataset if it is migrated.

The following section describes the fields on the File-AID for IMS – Dataset Concatenation screen:

DD TYPE

Seventeen DD types are allowed in File-AID for IMS/ISPF. This field is display only. You cannot add new DD types. The datasets stored in the IXPENV load module for the environment always have a minimum of 17 entries, one per DD type. If all of the datasets are deleted for a particular DD type, one default entry is built for that DD type with the dataset name blank. Following is a list of DD types:

- IMS ACB - ACB library
- IMS DBD - DBD library
- IMS ESL - DB2 library
- IMS MDA - MDA library
- IMS PSB - PSB library
- IMS RES - RES library
- IMS PROC - PROC library
- COB XREF - COBOL cross-reference
- PLI XREF - PL/I cross-reference
- COB 1 - COBOL layouts 1
- COB 2 - COBOL layouts 2
- FI FLEX - FLEX command statements
- PLI 1 - PL/I layouts 1
- PLI 2 - PL/I layouts 2
- FI APPL - Application relationships
- FI SEL - Selection criteria
- IMS STEP - DBD exit routines

Dataset Name

Dataset names can be entered fully qualified with quotes or unqualified without quotes. Dataset names entered without quotes append your TSO user ID as the high-level qualifier. All dataset names must be valid and cataloged datasets; otherwise, an error message displays in the Message field. The following edits are performed on the datasets based on DD type:

- The four layout datasets can be a PDS, Panvalet, or Librarian format. If the dataset is Panvalet or Librarian, then only one is allowed. You cannot mix PDSs, Panvalet, or Librarian formats for any of the layout DD types.
- The two cross-reference datasets can be either a PDS or sequential format. If the dataset is sequential, then only one is allowed.
- Selection criteria, application relationships, FLEX statements, and PROCLIB can be a PDS only.
- ACBLIB, DBDLIB, PSBLIB, MDALIB, STEPLIB, DFHESL, and RESLIB must be a PDS with RECFM=U.

CAUTION:

Datasets with an error message are still included in the IXPENV load module for the environment. These datasets are excluded from processing if the environment is selected for use.

Concat No.

The concatenation number field is initialized to 10 and incremented by 10 for each dataset name per DD type. You can control the concatenation sequence of the datasets by DD type. Simply renumber this field for the dataset sequence you want, and then press Enter. When you use the R (Repeat) line command, a concatenation number is repeated. Change this number if the dataset sequence is not already in the desired sequence.

Message

The Message field in the table display shows a message ID when an error is detected with the dataset. If the dataset is migrated, then the Message field displays MIGRATED. When the message field is not blank , enter the S (Select) line command to view the message text of the error message. For migrated datasets, the S line command displays the MIGRATED DATASET panel and enables you to recall the dataset. If the message field is blank, then the S line command is ignored.

Option A – All Parms

If you select option A, all of the screens for the previous five options are displayed in order beginning with the File-AID for IMS – Modify System Parameters screen (Figure 2-23 on page 2-29). You can modify any of the fields. Use the Down (PF8) and Up (PF7) keys to scroll to any second screen for an option. Press Enter to save and process your changes and to move to the next applicable option for the environment you're updating. After the last applicable screen, use the End command to display the File-AID for IMS – Assemble IXPENV screen (Figure 2-31 on page 2-41).

Assemble IXPENV

The File-AID for IMS – Assemble IXPENV screen, as shown in Figure 2-31 on page 2-41, is accessed by entering the END command on the File-AID for IMS – Select Environment screen (Figure 2-20 on page 2-25). The File-AID for IMS – Assemble IXPENV screen provides an option to edit, submit, and save the batch JCL generated to assemble and link an updated IXPENV load module. Option 1 (Edit) and option 2 (Save) save the JCL in installation library member @FIENV.

The name of the original load library for the IXPIPRMS load module that was converted or the IXPENV load module to be updated is displayed for information only.

Figure 2-31. File-AID for IMS – Assemble IXPENV

```
ADMIN ------------------ File-AID for IMS - Assemble IXPENV  ------------------
OPTION  ===>

  1  EDIT JCL   to edit the generated JCL
  2  SAVE JCL   to save JCL in 'FI.IMSTEST.INSTALL(@FIENV)'
  3  SUBMIT     to submit batch job without review

Original load library:  'FI.DEVLP.LOAD(IXPIPRMS)'

Specify linkedit information for updated IXPENV:
   LIBRARY FOR IXPENV     ===> 'FI.DEVLP.LOAD'
   ASSEMBLER USED         ===> ASMA90    (ie. ASMA90 for High Level Assembler
                                          or  IEV90 for Assembler H)
Specify batch JCL information:
   SYSOUT CLASS ===>

JOB statement information:
 ===> //TSOUSER JOB ('ACCOUNT.INFO'),'USERNAME',CLASS=L,REGION=5M,
 ===> //   MSGCLASS=X,NOTIFY=TSOUSER,MSGLEVEL=(1,1)
 ===> //*
 ===> //*

END Command to exit
```

Linkedit Information

LIBRARY FOR IXPENV

By default the name of the original load library specified on the Administration menu is used to link-edit the IXPGLOBL load module. You can specify a different load library name.

ASSEMBLER USED

Specify the Assembler program name used at your installation. Valid entries are ASM90=High Level Assembler or IEV90=Assembler H.

Batch JCL Information

SYSOUT CLASS

Specify the output class for the Assembly listing.

Job Statement Information

Enter the JOB statement and other related JCL statements. For both /*JobParm and /*Route statements.

When you've completed your entries for this screen, choose one of the following options to process the JCL:

- Option 1 – Edit the generated JCL and display an ISPF/PDF Edit screen that invokes the member that contains the JCL to run the the job. All ISPF edit commands are available for use. You can enter the SUBMIT command. Alternatively, you can use the CREATE and REPLACE primary commands to save the generated JCL into a partitioned (PDS) or sequential dataset that you can submit at a later time. To exit without processing the JCL, enter the END or CANCEL command to return to the File-AID for IMS – Assemble IXPENV screen.
- Option 2 – Save the generated JCL in your installation library with a member name of @FIENV.
- Option 3 – Submit the generated JCL without first reviewing.

Note: This function generates JCL each time the CLIST is executed. It does not attempt to read saved members from a previous execution. You cannot use option 3 to submit previously saved JCL.

If you enter the END command to exit the File-AID for IMS – Assemble IXPENV screen without generating and either submitting or saving the JCL, the File-AID for IMS – ADMIN Information Panel is displayed as shown in Figure 2-32 on page 2-42.

Figure 2-32. File-AID for IMS – ADMIN Information Panel

```
ADMIN --------------- File-AID for IMS - ADMIN Information Panel --------------
COMMAND ===>

 ******************************** C A U T I O N ******************************

 You are about to exit without generating the JCL used to create the
 new IXPENV load module.  If you do not save or submit the generated
 JCL, all changes made to the environment definitions will be lost.

    Enter "N" below to submit or save the generated JCL.

    Enter "Y" below to exit and cancel all pending changes.

 Exit and cancel all pending changes  ===> N  ( Y = Yes; N = No )
```

If you keep the default setting and specify **N**, you're returned to the File-AID for IMS – Assemble IXPENV screen, where you have a second opportunity to generate and submit or save the JCL. Upon completion, enter the END command to exit this screen.

If you specify **Y**, any changes you entered on the screens for the File-AID for IMS – Modify Environment menu options are lost, and you're returned to the File-AID for IMS – Environment Definition menu (Figure 2-17 on page 2-21). Enter the END command to return to the Administration menu (Figure 2-7 on page 2-11).

User Exits

The File-AID for IMS – Copy/Modify User Exits menu is displayed as shown in Figure 2-33 when you select option 3, USER EXITS, from the File-AID for IMS – Administration menu (Figure 2-7 on page 2-11).

Figure 2-33. File-AID for IMS – Copy/Modify User Exits Menu

```
ADMIN --------------- File-AID for IMS - Copy/Modify Users Exits --------------
OPTION  ===>

  1  SECURITY EXIT- Copy/Modify security exit
  2  APPL REL EXIT- Copy/Modify application relationship exit
  3  SEG CNTL EXIT- Copy/Modify segment control exit table and programs
```

Security Exit

The File-AID for IMS – Security Exit Option Menu is displayed as shown in Figure 2-34 when you select option 1, SECURITY EXIT, from the File-AID for IMS – Copy/Modify Users Exits menu (Figure 2-33).

Figure 2-34. File-AID for IMS – Security Exit Option Menu

```
ADMIN -------------- File-AID for IMS - Security Exit Option Menu -------------
OPTION  ===>

  1  COPY    - Copy sample source into user library
  2  COMPILE - Compile and link security exit
  3  DEFAULT - Reset security exit to inactive status









--------------------------------------------------------------------------------
File-AID/IMS will work with the current security that is on your system.  This
option should only be used if you need to further customize the security when
File-AID/IMS is used.  Refer to the Installation Guide for more information.
```

The File-AID for IMS – Copy Sample Security Exit screen is displayed as shown in Figure 2-35 on page 2-44 when you select option 1, COPY, from the Security Exit Option Menu (Figure 2-34). This screen enables you to copy model code from the installation library into a library you specify. The following sample security exit programs are provided in the File-AID for IMS/ISPF installation library:

- ACF2SCXT - Assembler language interface to ACF2
- PLISCXT - PL/I self-contained security exit program
- RACFSCXT - Assembler language interface to RACF
- COBSCXT - COBOL self-contained security exit program
- TSSSCXTA - Assembler language interface to Top Secret
- TSSSCXTC - COBOL language interface to Top Secret

Figure 2-35. File-AID for IMS – Copy Sample Security Exit Screen

```
ADMIN -------------- File-AID for IMS - Copy Sample Security Exit -------------
COMMAND ===>

Specify existing user library to receive copy of sample security exit:

   USER SOURCE LIBRARY   ===>
   MEMBER                ===>
   REPLACE MEMBER        ===>              (Y=Yes,N=No)
   EXIT TYPE             ===>              (COB,PLI,RACF,ACF2,TSA,TSC)

--------------------------------------------------------------------------------
The sample security exits that interface with RACF, ACF2, and Top Secret
should only be considered if you are going to have File-AID/IMS run as a BMP.
This online function can assist you in the generation of that customized
exit code.

 EXIT TYPEs for sample exits include:
     COB  - COBOL exit
     PLI  - PL/I exit
     RACF - Assembler exit which demonstrates interfacing with RACF
     ACF2 - Assembler exit which demonstrates interfacing with ACF2
     TSA  - Assembler exit which demonstrates interfacing with Top Secret
     TSC  - COBOL     exit which demonstrates interfacing with Top Secret
```

The File-AID for IMS – Compile Security Exit screen is displayed as shown in Figure 2-36 when you select option 2, COMPILE, from the Security Exit Option Menu (Figure 2-34 on page 2-43). This screen enables you to supply information required to compile or assemble and link-edit a security exit.

Figure 2-36. File-AID for IMS – Compile Security Exit Screen

```
ADMIN --------------- File-AID for IMS - Compile Security Exit ----------------
COMMAND ===>

Specify compile/assemble and linkedit information:
   USER SOURCE LIBRARY   ===>
   MEMBER                ===>
   LANGUAGE TYPE         ===>           (HLA,ASM,COB, or PLI)

   LIBRARY FOR IXPSCXT   ===> 'FI.DEVLP.LOAD'

   COMPILER LIBRARY      ===> 'IGY.V2R1M0.SIGYCOMP'
   LINKAGE LIBRARY       ===> 'CEE.V1R5M0.SCEELKED'

HLA=High Level Assembler, ASM=Assembler H, COB=COBOL, and PLI=PL/I
--------------------------------------------------------------------------------
The File-AID/IMS security exit module IXPSCXT is dynamically loaded
when it is used by the product.  This simplifies application of future
product maintenance and release upgrades.

Some installations may have reason to statically link IXPSCXT into the
IXPSUBS load module.  If so, complete the dynamic link of IXPSCXT into
the File-AID for IMS load library.  When IXPSCXT has been successfully
linked, modify and submit the JCL found in the JCLSTAT member of the
File-AID for IMS EXECJCL library.
```

The File-AID for IMS – Restore Inactive Security Exit screen is displayed as shown in Figure 2-37 on page 2-45 when you select option 3, DEFAULT, from the Security Exit Option Menu (Figure 2-34 on page 2-43). Use this screen to generate JCL to restore the original default security exit that was shipped with File-AID for IMS/ISPF.

Figure 2-37. File-AID for IMS – Restore Inactive Security Exit Screen

```
ADMIN ------------- File-AID for IMS - Restore Inactive Security Exit ---------
COMMAND ===>


Specify the File-AID for IMS load library where the security exit should be
restored to its original inactive status:

   LOAB LIBRARY DSN     ===> 'FI.DEVLP.LOAD'
   ASSEMBLER TYPE       ===>         (H=High Level Assembler, A=Assembler H)









--------------------------------------------------------------------------------
If you have modified the security exit and now find that you need to restore
the original security without modifications, this panel will help you build
JCL to reestablish an "inactive" security exit that is statically linked
within the product.
```

Application Relationship Exits

The File-AID for IMS – Application Relationship Exit Menu is displayed as shown in Figure 2-38 when you select option 2, APPL REL EXIT, from the File-AID for IMS – Copy/Modify User Exits menu (Figure 2-33 on page 2-42). An Application Relationship exit module is an optional user-written module called during the extract process. This exit module is called after the target key is constructed from the source segment fields. This exit module (also known as the source segment exit module) can manipulate the target key and include up to nine other target root keys to be extracted.

Figure 2-38. File-AID for IMS – Application Relationship Exit Menu

```
ADMIN --------- File-AID for IMS - Application Relationship Exit Menu ---------
OPTION  ===>

  1  COPY    - Copy sample source into user library
  2  COMPILE - Compile/Assemble and link source in user library









--------------------------------------------------------------------------------
An application relationship is a File-AID/IMS defined relationship between a
segment in one database and a root segment in another database (called source
and target, respectively).  You can use the application relationship exit to
create these definitions. Establishing application relationships will assist
in synchronizing updates to multiple databases containing related data.
```

Select option 1, COPY, from the Application Relationship Exit Menu (Figure 2-38 on page 2-45) to display the File-AID for IMS – Copy Sample Appl. Relationship Exit screen as shown in Figure 2-39. This screen enables you to copy model code from the installation library into a library you specify. The following sample application relationship exit programs are provided in the File-AID for IMS/ISPF installation library:

- ARCOBXT - COBOL application relationship exit
- ARPLIXT - PL/I application relationship exit
- ARASMXT - Assembler application relationship exit

Figure 2-39. File-AID for IMS – Copy Sample Appl. Relationship Exit Screen

```
ADMIN -------- File-AID for IMS - Copy Sample Appl. Relationship Exit ---------
COMMAND ===>

Specify existing user library to receive application relationship exit :
   USER SOURCE LIBRARY   ===>
   MEMBER                ===>
   REPLACE MEMBER        ===>            (Y=Yes,N=No)

   LANGUAGE TYPE         ===>            (ASM=Assembler,COB=COBOL,PLI=PL/I)
```

Select option 2, COMPILE, from the Application Relationship Exit Menu (Figure 2-38 on page 2-45) to display the File-AID for IMS – Compile Application Relationship Exit screen as shown in Figure 2-40. This screen enables you to supply information required to compile or assemble and link-edit an application relationship exit.

Figure 2-40. File-AID for IMS – Compile Application Relationship Exit

```
ADMIN ------ File-AID for IMS - Compile Application Relationship Exit ---------
COMMAND ===>

Specify compile/assemble and linkedit information:
   USER SOURCE LIBRARY   ===>
   MEMBER                ===>
   LANGUAGE TYPE         ===>            (HLA,ASM,COB, or PLI)

   LOAD LIBRARY          ===> 'FI.DEVLP.LOAD'

   COMPILER LIBRARY      ===> 'IGY.V2R1M0.SIGYCOMP'
   LINKAGE LIBRARY       ===> 'CEE.V1R5M0.SCEELKED'

HLA=High Level Assembler, ASM=Assembler H, COB=COBOL, PLI=PL/I
-------------------------------------------------------------------------------
```

Segment Control Exit

The File-AID for IMS – Segment Control Exit Menu is displayed as shown in Figure 2-41 when you select option 3, SEG CNTL EXIT, from the File-AID for IMS – Copy/Modify Users Exits menu (Figure 2-33 on page 2-42).

Figure 2-41. File-AID for IMS – Segment Control Exit Menu

```
ADMIN ----------- File-AID for IMS - Segment Control Exit Menu ----------------
OPTION  ===>

  1  COPY TBL - Copy sample segment control exit table
  2  ASM TBL  - Assemble and link segment control exit table
  3  COPY PGM - Copy sample segment control exit programs
  4  ASM PGM  - Compile/Assemble segment control exit program




-------------------------------------------------------------------------------
The segment control exit program is called from six different points during
File-AID for IMS/ISPF processing:
  1. Initialization Exit - before any segments are processed
  2. Early Read Exit     - as soon as the segment is obtained from DL/I
  3. Late Read Exit      - after the segment has passed any criteria
                           but before it is displayed (for browse/edit)
                           before submit functions (for batch)
                           before it is written to the extract (for extract)
  4. Early Write Exit    - before the segment is replaced, inserted or deleted
  5. Late Write Exit     - before a DL/I insert or replace is performed
  6. Termination Exit    - terminates each segment with an exit specified
```

Select option1, COPY TBL, from the Segment Control Exit Menu (Figure 2-41 on page 2-47) to display the File-AID for IMS – Copy Sample Segment Control Exit Table screen as shown in Figure 2-42. This screen enables you to copy model code from the installation library into a library you specify. The Segment Control Exit Table provides File-AID for IMS/ISPF with the names of the segments that have a segment control exit specified. A sample Assembler segment control exit table, IXPSCTAB, is provided in the File-AID for IMS/ISPF installation library.

Figure 2-42. File-AID for IMS – Copy Sample Segment Control Exit Table Screen

```
ADMIN ------ File-AID for IMS - Copy Sample Segment Control Exit Table --------
COMMAND ===>

Specify existing user library to receive segment control exit table:
   USER SOURCE LIBRARY   ===>
   MEMBER                ===>
   REPLACE MEMBER        ===>            (Y=Yes,N=No)
```

Select option 2, ASM TBL, from the Segment Control Exit Menu (Figure 2-41 on page 2-47) to display the File-AID for IMS – Compile Segment Control Exit Table screen as shown in Figure 2-43 on page 2-48. This screen enables you to supply information required to assemble and link-edit a segment control exit table.

Figure 2-43. File-AID for IMS – Compile Segment Control Exit Table Screen

```
ADMIN -------- File-AID for IMS - Compile Segment Control Exit Table ----------
COMMAND ===>

Specify assemble and linkedit information:
   USER SOURCE LIBRARY   ===>
   MEMBER                ===>
   LANGUAGE TYPE         ===>           (HLA, or ASM)
   LIBRARY FOR IXPSCTAB  ===> 'FI.DEVLP.LOAD'

 HLA=High Level Assembler, ASM=Assembler H
-------------------------------------------------------------------------------
The File-AID/IMS segment control exit table IXPSCTAB is dynamically loaded
when it is used by the product.  This simplifies application of future
product maintenance and release upgrades.

Some installations may have reason to statically link IXPSCTAB into the
IXPSUBS load module.  If so, complete the dynamic link of IXPSCTAB into
the File-AID for IMS load library.  When IXPSCTAB has been successfully
linked, modify and submit the JCL found in the JCLSTAT member of the
File-AID for IMS EXECJCL library.
```

Select option 3, COPY PGM, from the Segment Control Exit Menu (Figure 2-41 on page 2-47) to display the File-AID for IMS – Copy Sample Segment Control Exit screen as shown in Figure 2-44. This screen enables you to copy model code from the installation library into a library you specify. The following sample segment control exit programs are provided in the File-AID for IMS/ISPF installation library:

- ASMSEGXT – Assembler segment control exit program
- COBSEGXT – Cobol segment control exit program
- PLISEGXT – PL/I segment control exit program

Figure 2-44. File-AID for IMS – Copy Sample Segment Control Exit Screen

```
ADMIN --------- File-AID for IMS - Copy Sample Segment Control Exit -----------
COMMAND ===>

Specify existing user library to receive segment control exit :
   USER SOURCE LIBRARY   ===>
   MEMBER                ===>
   REPLACE MEMBER        ===>            (Y=Yes,N=No)

   LANGUAGE TYPE         ===>            (ASM=Assembler,COB=COBOL,PLI=PL/I)
```

Select option 4, ASM PGM, from the Segment Control Exit Menu (Figure 2-41 on page 2-47) to display the File-AID for IMS – Compile Segment Control Exit screen as shown in Figure 2-45 on page 2-49. This screen enables you to supply information required to assemble and link-edit a segment control exit program.

Figure 2-45. File-AID for IMS – Compile Segment Control Exit Screen

```
ADMIN -------- File-AID for IMS - Compile Segment Control Exit ----------------
COMMAND ===>

Specify compile/assemble and linkedit information:
   USER SOURCE LIBRARY   ===>
   MEMBER                ===>
   LANGUAGE TYPE         ===>            (HLA,ASM,COB, or PLI)

   LOAD LIBRARY          ===> 'FI.DEVLP.LOAD'

   COMPILER LIBRARY      ===> 'IGY.V2R1M0.SIGYCOMP'
   LINKAGE LIBRARY       ===> 'CEE.V1R5M0.SCEELKED'




-------------------------------------------------------------------------------
Because the segment control exit must be dynamically loaded, no option is
offered to specify the linkage editor option.


HLA=High Level Assembler, ASM=Assembler H, COB=COBOL, PLI=PL/I
```

Training Files

The File-AID for IMS – Training Files screen is displayed as shown in Figure 2-46 on page 2-50 when you select option 4, TRAINING, from the File-AID for IMS – Administration menu (Figure 2-7 on page 2-11). This screen enables you to regenerate or modify the training files shipped with File-AID for IMS/ISPF.

The following naming convention is used for the training files:

- hilevelqualifier.FISAMP.DBDLIB – training DBD library
- hilevelqualifier.FISAMP.COBOLLIB – training COBOL dataset
- hilevelqualifier.FISAMP.PLILIB – training PL/I dataset
- hilevelqualifier.FISAMP.XREFC – training seg/layout XREF COBOL
- hilevelqualifier.FISAMP.XREFP – training seg/layout XREF PL/I
- hilevelqualifier.FISAMP.SELCRIT – training selection criteria
- hilevelqualifier.FISAMP.APPLREL – training application relationships
- hilevelqualifier.FISAMP.CUSTOMER – training customer database
- hilevelqualifier.FISAMP.ORDER – training order database
- hilevelqualifier.FISAMP.PART – training part database
- hilevelqualifier.FISAMP.UNLOAD – training unloaded database
- hilevelqualifier.FISAMP.FLEX – training batch JCL
- hilevelqualifier.FISAMP.REPORT – training sample batch report

Figure 2-46. File-AID for IMS – Training Files Screen

```
¦ADMIN --------------- File-AID for IMS - Training Files -----------------------
 COMMAND ===>

 Specify information to be used by the training batch job:
    INSTALL TAPE VOL SER     ===> AV2006
    INSTALL TAPE DEVICE TYPE ===> CART
    UNIT FOR TEMPORARY FILES ===> SYSDA

 Specify information for downloading new training files:
    HIAGH LEVEL NODE             ===> TSOUSER
    UNIT FOR TRAINING FILES      ===> DISK





--------------------------------------------------------------------------------
The installation tape contains multiple sequential files used for training and
verification of proper installation.  Leave HIGH LEVEL NODE blank if you do
not want to create training files.

Warning: Libraries that exist will be replaced.
```

The following section describes the fields on the File-AID for IMS – Training Files screen:

Specify Information for the Training Batch Job:

INSTALL TAPE VOL SER

Specify the volume serial number of your File-AID for IMS/ISPF installation tape.

INSTALL TAPE DEVICE TYPE

Specify your device type for the install tape.

UNIT FOR TEMPORARY FILES

Specify the unit name used by the batch job for temporary files.

Specify Information for Downloading the New Training Files

HIGH LEVEL NODE

Specify the high-level qualifier for training dataset names. You can specify a compound node up to 28 characters.

UNIT FOR TRAINING FILES

Specify the device unit name to be used for training files.

After completing the fields on the File-AID for IMS –Training Files screen, press Enter to display the File-AID for IMS – Assemble IXPGLOBL screen as shown in Figure 2-47.

Assemble IXPGLOBL

The File-AID for IMS – Assemble IXPGLOBL screen, as shown in Figure 2-47 on page 2-51, is displayed when you press Enter on the File-AID for IMS – Training Files screen (Figure 2-46). If the training datasets are regenerated or modified, this JCL unloads the training datasets from the installation tape. Option 1 (Edit) and option 2 (Save) saves the JCL in your installation library member @FITRAIN.

The name of the original load library specified on the Administration menu for the IXPGLOBL load module is displayed for information only.

Figure 2-47. File-AID for IMS – Assemble IXPGLOBL Screen

```
ADMIN ------------------ File-AID for IMS - Assemble IXPGLOBL -----------------
OPTION  ===>

END Command to exit

  1  EDIT JCL   to edit the generated JCL
  2  SAVE JCL   to save JCL in 'FI.DEVLP.INSTALL(@FITRAIN)'
  3  SUBMIT     to submit batch job without review

Original load library:  'FI.DEVLP.LOAD(IXPGLOBL)'

Specify linkedit information for updated IXPGLOBL:
   LIBRARY FOR IXPGLOBL   ===> 'FI.DEVLP.LOAD'
   ASSEMBLER USED         ===> ASMA90    (ie. ASMA90 for High Level Assembler
                                          or  IEV90 for Assembler H)
Specify batch JCL information:
   SYSOUT CLASS ===>

JOB statement information:
 ===> //TSOUSER JOB ('ACCOUNT.INFO'),'USERNAME',CLASS=L,REGION=5M,
 ===> //   MSGCLASS=X,NOTIFY=TSOUSER,MSGLEVEL=(1,1)
 ===> //*
 ===> //*
```

Specify the following information on this screen:

Linkedit Information

LIBRARY FOR IXPGLOBL

By default the name of the original load library specified on the Administration menu is used to link-edit the IXPGLOBL load module. You can specify a different load library name.

ASSEMBLER USED

Specify the Assembler program name used at your installation. Valid entries are ASM90=High Level Assembler or IEV90=Assembler H.

Batch JCL Information

SYSOUT CLASS

Specify the output class for the Assembly listing.

Job Statement Information

Enter the JOB statement and other related JCL statements. For both /*JobParm and /*Route statements.

When you've completed your entries for this screen, choose one of the following options to process the JCL:

- Option 1 – Edit the generated JCL and display an ISPF/PDF Edit screen that invokes the member that contains the JCL to run the the job. All ISPF edit commands are available for use. You can enter the SUBMIT command. Alternatively, you can use the CREATE and REPLACE primary commands to save the generated JCL into a partitioned (PDS) or sequential dataset that you can submit at a later time. To exit without processing the JCL, enter the END or CANCEL command to return to the File-AID for IMS – Assemble IXPGLOBL screen.
- Option 2 – Save the generated JCL in installation library member @FITRAIN.
- Option 3 – Submit the generated JCL without first reviewing.

Note: This function generates JCL each time the CLIST is executed. It does not attempt to read saved members from a previous execution. You cannot use option 3 to submit previously saved JCL.

To exit this screen, enter the END command to return to the previous screen or the RETURN command to return to the Primary Option Menu.

Parameters Summary Information

The parameters summary information screen, as shown in Figure 2-48 through Figure 2-54 on page 2-55, is displayed when you select option I, Information, from the Parameters Selection Menu (Figure 2-1 on page 2-1). This screen is display-only; you can't edit the data. This screen displays all installation parameters as specified at the time of installation. For information about the fields on this screen, refer to the *File-AID for IMS/ISPF Installation Guide.*

Figure 2-48. Parameters Summary Information Screen, Part 1

```
 Menu  Utilities  Compilers  Help
 sssssssssssssssssssssssssssssssssssssssssssssssssssssssssssssssssssssssssssssssss
 BROWSE    SYS02345.T082311.RA000.EFHNXW0.R0178521    Line 00000000 Col 001 080
 Command ===>                                          Scroll ===> PAGE
********************************* Top of Data **********************************
 File-AID for IMS - Release 07.01.00                    2002/12/11
 Copyright (c) 1992 - 2005, COMPUWARE Corporation       08:33

 http://frontline.compuware.com                    1-800-538-7822
 ---------------------------------------------------------------------
   Client: 000001 - COMPUWARE CORPORATION
     Site: 001 - FARMINGTON HILLS HEADQUARTERS
      CPU: IBM,9672-4E-040107,
       OS: z/OS   01.03.00
     ISPF: ISPF FOR z/OS 01.02.00
  SYSPLEX: PRODPLEX  SYSNODE: CW01  SYSTEM ID: CW01
 ---------------------------------------------------------------------
           Environment Settings in use during this session

 Env: DEV1 - DEVELOPMENT ENVIRONMENT WITH CONCATENATIONS

 Default File-AID for IMS Parameters were loaded from:
   IXPGLOBL: FI.DEVLP.LOAD
     IXPENV:
```

Figure 2-49. Parameters Summary Information Screen, Part 2

```
Menu  Utilities  Compilers  Help
ssssssssssssssssssssssssssssssssssssssssssssssssssssssssssssssssssssssssssssssssssssssss
BROWSE    SYS02345.T082311.RA000.EFHNXW0.R0178521    Line 00000020 Col 001 080
Command ===>                                                  Scroll ===> PAGE

LE RUNTIME Information:
  Runtime library is not in the LINKLIST
  DSN: CEE.SCEERUN

PANVALET is installed release 12
LIBRARIAN is installed
File-AID MVS is available

System Parameters:
    IMS ID is I610  ALTID is A610  IMS Version is 06100
    Region Controller is DFSRRC00

    DFSVSAMP DSN and Member:
    Active:      'FI.UTIL.CNTL'(DFSVSAMP)
    Environment: FI.UTIL.CNTL(DFSVSAMP)

    RECON Datasets are preallocated or will be allocated by IMS
```

Figure 2-50. Parameters Summary Information Screen, Part 3

```
Menu  Utilities  Compilers  Help
ssssssssssssssssssssssssssssssssssssssssssssssssssssssssssssssssssssssssssssssssssssssss
BROWSE    SYS02345.T082311.RA000.EFHNXW0.R0178521    Line 00000040 Col 001 080
Command ===>                                                  Scroll ===> PAGE
    Dynamic and Static PSB allowed
    Current region type is BMP
    CHANGE command is allowed
    CHANGE ALL command is allowed
    Language mode is COBOL
    Caps mode is OFF
    Code Page 0697 (English) is in use
    Data Format is EBCDIC

DLI Parameter string:
    Active: ,0000,,,,,,,I610,,N,N,,N,,
    Env:    ,0000,,,,,,,I610,,N,N,,N,,,,
    Checkpoint frequency is 00000

BMP Parameter string:
    Active: ,,N00000,,,,1,,0000,0000,I610,IMS6RACF,,,A610
    Env:    ,,N00000,,,,1,,0000,0000,,IMS6RACF,,,,

ACB Parameters:
```

Figure 2-51. Parameters Summary Information, Part 4

```
 Menu  Utilities  Compilers  Help
ssssssssssssssssssssssssssssssssssssssssssssssssssssssssssssssssssssssssssssssssssssssss
BROWSE    SYS02345.T082311.RA000.EFHNXW0.R0178521    Line 00000060 Col 001 080
Command ===>                                                  Scroll ===> PAGE
    ACBLIB will be reset
    Dynamic ACB library is FI.IMS610.DOPT.PUBLIC.ACBLIB
    PSB library is FI.IMSTEST.PSBLIB

-------------------------------------------------------------------
Environment Datasets:                           Source Messages

IMS Datasets for EDIT, BROWSE, INIT, LOAD, and XREF

 DBD:
  TSOUSER.FISAMP.DBDLIB                         USER   IXPE332
  FI.IMSTEST.DBDLIB                             ENV

 PSB:
  FI.IMSTEST.PSBLIB                             USER
  FI.BAT.PSBLIB                                 ENV
  TSOUSER.FISAMP.PSBLIB                         ENV    IXPE385

IMS Datasets for EXTRACT, FLEX, and APPLICATION RELATIONSHIPS
```

Figure 2-52. Parameters Summary Information Screen, Part 5

```
 Menu  Utilities  Compilers  Help
ssssssssssssssssssssssssssssssssssssssssssssssssssssssssssssssssssssssssssssssssssssssss
BROWSE    SYS02345.T082311.RA000.EFHNXW0.R0178521    Line 00000080 Col 001 080
Command ===>                                                  Scroll ===> PAGE
 DBD:
  TSOUSER.FISAMP.DBDLIB                         USER   IXPE332
  FI.IMSTEST.DBDLIB                             ENV

 PSB:
  FI.IMSTEST.PSBLIB                             ENV
  FI.BAT.PSBLIB                                 ENV
  TSOUSER.FISAMP.PSBLIB                         ENV    IXPE385

 Concatenations used for all options:

 ACB:
  FI.IMSTEST.ACBLIB                             ENV
  FI.IMSTEST.ACBLIBA                            ENV
  FI.IMSTEST.ACBLIBB                            ENV

 COBOL Cross Reference:
  FI.PUBLIC.PP060202.FISAMP.XREFC               ENV
  TSOUSER.FISAMP.XREFC                          ENV
```

Figure 2-53. Parameters Summary Information, Part 6

```
Menu  Utilities  Compilers  Help
ssssssssssssssssssssssssssssssssssssssssssssssssssssssssssssssssssssssssssssssssssssss
BROWSE    SYS02345.T082311.RA000.TSOUSER.R0178521    Line 00000100 Col 001 080
Command ===>                                                  Scroll ===> PAGE
COBOL Layouts:
  FI.IMSTEST.FISAMP.COBOLLIB                    ENV
  TSOUSER.FISAMP.COBOLLIB                       ENV

PLI Cross Reference:
  FI.PUBLIC.PP060202.FISAMP.XREFP               ENV

PLI Layouts:
  TSOUSER.FISAMP.PLILIB                         USER   IXPE332
  FI.PUBLIC.PP060201.FISAMP.PLILIB              ENV
  FI.PUBLIC.FISAMP.PLILIB                       ENV

Application Relationship:
  TSOUSER.FFF                                   USER   IXPE332
  FI.IMSTEST.APPLREL                            ENV

Selection Criteria:
  FI.PUBLIC.PP060201.FISAMP.SELCRIT             ENV

RESLIB:
```

Figure 2-54. Parameters Summary Information, Part 7

```
Menu  Utilities  Compilers  Help
ssssssssssssssssssssssssssssssssssssssssssssssssssssssssssssssssssssssssssssssssssssss
BROWSE    SYS02345.T082311.RA000.TSOUSER.R0178521    Line 00000120 Col 001 080
Command ===>                                                  Scroll ===> PAGE
  IMS610A.RESLIB                                ENV

TASKLIB:
  IMS610A.RESLIB                                ENV
  FI.DEVLP.LOAD                                 ENV
  TSOUSER.DEVLP.LOAD                            ENV

PROCLIB and DFSESL
  IMS610A.PROCLIB                               ENV
  TSOUSER.USER.CLIST                            ENV
  DB2.PROD.LOAD                                 ENV
  DB2P.SDSNLOAD                                 ENV

******************************** Bottom of Data ********************************
```

Chapter 3.
Datasets

This chapter describes the datasets used by File-AID for IMS/ISPF. In addition, IMS requires several datasets to be allocated to specific ddnames before DL/I calls can be made. These datasets are described on page 3-7.

Dataset Concatenation Support

MVS currently supports a maximum concatenation of 114 files under a single ddname. In addition, no more than 3273 datasets may be allocated per job step or ISPF session. File-AID for IMS/ISPF supports dataset concatenations subject to the MVS limitations for the following types of system datasets:

- RESLIB, ACBLIB, PSBLIB, and DBDLIB datasets
- COBOL layouts
- PL/I layouts
- COBOL cross-reference datasets
- PL/I cross-reference datasets
- FLEX statement datasets
- Product TASKLIB and STEPLIB datasets
- Application relationship datasets
- IMS PROCLIB and DFHESL libraries
- Selection criteria datasets

Only partitioned or PDSE datasets are concatenated.

Concatenation lists are defined using the new Administration function. Separate concatenation lists may be defined for each environment created using this function. Refer to “Option 5 – Dataset Concatenations” on page 2-38 for more information.

Viewing Concatenation Lists

Use the new DSN command to view the concatenations defined for an environment. The DSN command displays a list of datasets by ddname. See “DSN” on page 11-12 for more information. If File-AID for IMS/ISPF is unable to allocate a dataset found in a list, a message code is displayed on the Dataset Concatenation screen. Use the SELECT command to view the the full text of the error message for the dataset in error. See “Option 5 – Dataset Concatenations” on page 2-38 for additional information.

When errors are detected in concatenation lists, File-AID for IMS/ISPF bypasses the datasets in error and construct a concatenation from the remaining datasets that can be allocated.

If concatenations have been defined for a particular dataset type, the File-AID for IMS/ISPF product panels that allow entry of dataset names of that type display a highlighted plus (+) sign next to the dataset name. If a highlighted plus (+) sign is present, you don’t have to enter a dataset name to access the predefined concatenation. If you enter dataset name when a highlighted plus (+) sign is present, that dataset becomes the first dataset in the concatenation. The remaining datasets defined in the concatenation are appended to the concatenation list unless the dataset is part of a DFSRESLB concatenation or the dataset is not a PDS or PDSE.

Special Considerations

File-AID for IMS/ISPF processes COBOL or PL/I layouts that are stored in partitioned (including PDSE), PANVALET, or LIBRARIAN datasets. The following mixtures of these dataset types are supported:

- Two PANVALET or LIBRARIAN datasets may be used at the same time.
- One PANVALET or LIBRARIAN dataset used with a concatenation list consisting of PDS or PDSE libraries.
- A concatentation list consisting of PDS or PDSE libraries followed by either a PANVALET or LIBRARIAN dataset.
- A concatentation list consisting only of PDS or PDSE libraries.

File-AID for IMS/ISPF supports the use of sequential datasets to store COBOL or PL/I XREFs, Selection Criteria, and FLEX Statements. Sequential datasets that are used for these purposes are not concatenated. File-AID for IMS/ISPF allocates these datasets when they are entered on a panel that processes them. They are also allocated if they are the first entry in the concatenation list for the current environment and you do not enter a dataset name when a panel prompting for the dataset is displayed.

Troubleshooting

If a dataset cannot be allocated by File-AID for IMS and it is part of a concatenation defined to the current environment, it is not processed as part of the concatenation list.

When this occurs, product panels that allow entry of dataset names of that type display a highlighted minus (-) sign next to the dataset name. If this happens, use the DSN command to view the dataset concatenation list. Datasets in error are flagged with an error message code. You can display the full text of the error message by selecting the dataset from the list.

Although an error has been detected, File-AID for IMS/ISPF continues to function. You may either enter a valid dataset, or you may attempt to use the remaining datasets defined to the concatenation if they are present. If no valid datasets remain in the concatenation defined for the environment, you are prompted to enter a dataset name.

File-AID for IMS/ISPF Datasets

All datasets must be cataloged and must reside on a direct access storage device or on a mass storage device, with the following exceptions:

- Extract TO/Load FROM files that reside on tape are allowed as output for database extract and input for database load.
- Temporary data files are allowed as input to independent batch extract and load jobs that you develop the JCL for (refer to Chapter 6, “Extract/Load”).

File-AID for IMS/ISPF can display a member list for partitioned datasets. Refer to “Member List Processing” on page 4-8.

Database Dataset

A database dataset contains the data that is input to the Browse, Edit, Extract, and Load functions and output only from the Initialize function.

When used as input to File-AID for IMS/ISPF, the dataset must be allocated and loaded as a valid IMS database. When used in the Initialize and Load (processing Option L) functions, the dataset must be allocated only (not loaded) because these functions load and initialize the dataset. For all functions, File-AID for IMS validates that its organization is ISAM, VSAM, OSAM Direct Access, or OSAM Physical Sequential (DSORG = IS, AM, DA, or PS). It does not validate the dataset's logical record length, block size, or record format.

File-AID for IMS/ISPF allows you to access OS password protected database datasets. Any database dataset can be protected to permit read-only or read/write access. More than one password can be assigned to the same database dataset. A database dataset that is read/write protected, for example, might allow several authorized users to read it, but only one user to write to it.

Specify the database dataset password in the Password field on the screens where you specify the database dataset name. A non-display input field is used so that the password does not appear on the screen.

Database Description Dataset Concatenation

The database description dataset concatenation contains Database Description (DBD) load modules created using the IMS DBD generation utility. The dataset characteristics must be those of a valid load module library. File-AID for IMS/ISPF validates that the dataset is partitioned (DSORG=PO) and that it has an undefined record format (RECFM=U). The dataset's logical record length or blocksize is not validated.

DL/I Access Methods Supported

File-AID for IMS/ISPF supports databases with DL/I access methods of HALDB, HSAM, SHSAM, HISAM, SHISAM, HDAM, HIDAM, INDEX, LOGICAL, DEDB, and MSDB.

The DL/I access method of MSDB is not supported for the Initialize function. All the operating system access methods allowed by IMS for use with these DL/I access methods are supported by File-AID for IMS.

The DL/I access method of GSAM is not supported by File-AID for IMS/ISPF. GSAM databases that are organized sequentially as BSAM datasets are compatible with OS/VS sequential datasets. You can use Compuware's File-AID/MVS file manipulation product to browse and edit this type of GSAM database.

Aside from GSAM databases, all IMS statement types, keywords, and operands available in a DBD generation are supported by the browse option of File-AID for IMS. Restrictions do exist within the edit option based on certain operand values for some keywords. Those restrictions are described in "Optional IMS Functions" on page 4-78.

The DL/I access methods of HSAM and SHSAM are not supported for the Initialize function and for the U and I options of the Load function.

INDEX and LOGICAL databases are not supported in the Initialize, Extract, and Load functions. These restrictions and where they affect File-AID for IMS processing are described in Chapter 5, "Utilities" and Chapter 6, "Extract/Load".

Segment Layout Dataset Concatenation

The segment layout dataset concatenation contains the COBOL or PL/I segment layouts used in many File-AID for IMS functions. The segment layout dataset can be one of the following types:

Table 3-1. Segment Layout Dataset Types

TYPE	DSORG	RECFM	LRECL
Partitioned Dataset	PO	F, FB	80
CA-PANVALET file	*	*	*
CA-LIBRARIAN file	*	*	*
Note: * Must conform to the requirements for a valid CA-PANVALET/LIBRARIAN file.			

The segment layout can be a separate COPYLIB member or hard-coded in a COBOL or PL/I program. If the layout is in a program or if a COPYLIB member contains multiple segment layouts, you can isolate the specific layout or portion of a layout that File-AID for IMS should use by specifying a starting data-name (refer to "Segment/Layout XREF Dataset Concatenation" on page 3-5). In these two cases, if you do not specify a starting data-name, File-AID for IMS uses every layout found in the program or COPYLIB member to format the data, treating the second through last layouts as redefinitions of the first.

The Segment Layout Member Name field, which appears on many screens, is 10 positions long to accommodate CA-PANVALET members with nine or ten position names. However, names of members in CA-LIBRARIAN and partitioned files must be less than or equal to eight positions.

File-AID for IMS supports two separate ddnames for use with segment layout datasets. You can use one or both of these ddnames to concatenate partitioned datasets for use with the product. You can also use each ddname to allocate a single PANVALET dataset or a single LIBRARIAN dataset. File-AID for IMS/ISPF continues to search these two ddnames in series as has been the case in releases prior to 7.0. With the introduction of concatenations in Release 7.0, search sequence and the definition of concatenations depend not only on dataset names that you can enter on the screen, but also upon the concatenation lists defined to the current environment.

File-AID for IMS follows a simple algorithm to determine which datasets are concatenated and searched. All segment layout datasets for a given language are listed in the following order:

1. First layout dataset (if any) that you entered
2. Second layout dataset (if any) that you entered
3. All of the datasets listed in the first layout concatenation
4. All of the datasets listed in the second layout concatenation.

The dataset organization of each dataset on the list is examined. Datasets are assigned to the two ddnames according to the following rules:

1. If the dataset is not partitioned, it is assigned the next available ddname. Only one non-partitioned dataset may be assigned per ddname.
2. If the dataset is partitioned, a partitioned concatenation list is started. Partitioned datasets immediately following the first one are added to the concatenation list. Construction of the concatenation list continues until a dataset is encountered that is not partitioned.
3. If the second ddname has not been assigned, the assignment process begins again following rules 1 and 2.

Segment/Layout XREF Dataset Concatenation

The Segment/Layout XREF dataset concatenation contains information that was created and maintained using Option 7 of File-AID for IMS/ISPF. The dataset organization can be sequential or partitioned (DSORG=PS or PO). The record format must be fixed or fixed-blocked (RECFM=F or FB), and the logical record length must be 80 (LRECL=80). The blocksize must be a multiple of the logical record length.

A segment/layout XREF dataset is created to communicate certain information about the COBOL or PL/I segment layout dataset to File-AID for IMS/ISPF. For each segment type within a database that you want to manipulate, specify the segment layout that defines that segment type. Additional information is specified in the segment/layout XREF dataset in the following situations:

1. The database you want to manipulate contains a segment type with differing formats. Each of those formats requires a separate segment layout to define the segment type.
2. The segment layout that defines a segment type is hard-coded in a COBOL or PL/I program.
3. The segment layout that defines a segment type is stored in a COPYLIB member that contains multiple segment layouts.
4. The segment you want to manipulate is a logical child or a concatenated segment.

In the first situation, the segment/layout XREF dataset contains the following pieces of information:

- The length and starting position of the record type value that identifies the format of a segment type.
- A list of all the possible record type values and the corresponding segment layout dataset COPYLIB member that defines segment type formats with those values.

In the second and third situations, the segment/layout XREF dataset contains the data name that indicates the start of the segment layout. File-AID for IMS/ISPF reads the layout from the COPYLIB member or program starting with the specified data name and stops reading when a data name item with a numerically equal or lower level number is encountered or when the end of the segment layout, COPYLIB member, or program is reached.

In the last situation, when IMS retrieves one of these segment types from a database, it places the segment's destination parent concatenated key, followed by the segment's data, in the I/O area of File-AID for IMS/ISPF. The segment/layout XREF dataset contains the segment layout name for the segment and indicates whether the destination parent concatenated key is defined in the layout.

Refer to Chapter 9, "Segment/Layout Cross-Reference" for examples of how to specify the record type value information and the starting data name.

Any File-AID for IMS/ISPF primary options that use segment layouts to define the data must have the segment layout datasets and segment/layout XREF dataset information specified as shown below.

```
         Use COBOL layouts . . ===>  Y       (Y = Yes ;N = No)

            + XREF dataset . . ===>  'XXXXXXX.FISAMP.XREF'
                     Member . . ===>  ORDERC  (Blank or pattern for member list)

   + COBOL layout dataset 1 . . ===>  'XXXXXXX.FISAMP.COBOLIB1'
                  Dataset 2 . . ===>  'XXXXXXX.FISAMP.COBOLIB2'
```

Use Layouts is used to indicate whether you want to use the current function in Formatted (Y) or Unformatted mode (N).

The table below shows the valid dataset and member entries for the segment layout and segment/layout XREF datasets for the two modes:

Table 3-2. Use Layouts Indicator

Use Layouts	Segment Layout Dataset	Segment/Layout XREF Dataset
Y	Partitioned/PAN/LIB/ file	Sequential file or member of partitioned file
N	Ignored	Ignored

More details on the specification and use of segment/layout XREF datasets are provided in the chapters and sections that discuss the screens where they are required.

Extract TO/Load FROM File Dataset

The Extract TO/Load FROM File dataset contains data that is extracted from and loaded into databases. Refer to Chapter 6, “Extract/Load” for a complete description.

The dataset organization can be sequential (DSORG=PS), partitioned (DSORG=PO), or VSAM ESDS. The record format for sequential and partitioned datasets must be variable or variable blocked (RECFM=V or VB). The maximum logical record length (LRECL) for all dataset organizations is determined during the extract process and includes the maximum segment length plus the length of the prefix information used in the Load function.

Selection Criteria Dataset Concatenation

The Selection Criteria dataset concatenation contains selection criteria information created using Option 6. You can use selection criteria in the Extract function. Chapter 8, “Selection Criteria” describes selection criteria in more detail.

The selection criteria dataset organization can be either sequential or partitioned (DSORG=PS or PO). The record format must be fixed or fixed-blocked (RECFM=F or FB), and the logical record length must be 80 (LRECL=80).

Application Relationship Dataset Concatenation

The Application Relationship dataset concatenation contains datasets that define the application relationship between databases. Chapter 10, “Application Relationships” describes the creation and maintenance of application relationships.

The application relationship dataset organization must be partitioned (DSORG=PO). The record format can be either fixed or fixed-blocked (RECFM=F or FB), and the logical record length must be 80 (LRECL=80).

ISPF Log and List Files Datasets

File-AID for IMS/ISPF llows you to use ISPF’s PRINT and PRINT-HI commands and to maintain a log of significant user activities using the List file and Log file, respectively.

Refer to the *ISPF/PDF Program Reference Manual* for a description of these files.

User Profile Dataset

File-AID for IMS/ISPF retains certain information in a user profile dataset that is used to preformat input fields with the values that you last entered on the same or a similar screen. Information maintained in your user profile includes the following:

- Dataset and member names. Up to 300 database ddnames, including associated database dataset names, are maintained and shared by the Browse, Edit, and Extract functions. Another set of 300 ddnames and dataset names are maintained and shared by the Initialize and Load functions.
- JOB statement information.
- SYSOUT class for printed output.
- Terminal characteristics and PF key definitions.
- Current scroll amount.

This information is retained from one session to another. As a new user, you need to enter certain information the first time it is requested. However, from that point on, you simply verify the information and make any changes before proceeding.

IMS Required Datasets

File-AID for IMS/ISPF accesses data in IMS databases through the DL/I facility of IMS and runs as a DL/I, BMP, or SDB (Shared Database) program.

In the Browse, Edit, Extract, and Load functions, you can specify a region type of DL/I or BMP to access the databases in their respective regions.

A DL/I region type invokes a batch DL/I region to access offline databases.

A BMP region type invokes a BMP region to access online IMS/DC and DBCTL databases.

The Browse and Edit functions access databases under TSO/ISPF. The Initialize, Extract, and Load functions run in a batch processing environment started with job control language (JCL). The Initialize function is restricted to DL/I processing only.

The following ddnames are the only IMS-related ddnames that File-AID for IMS/ISPF uses. Other IMS DDs that can be allocated before invoking File-AID for IMS/ISPF do not have any effect on your use of the product.

IMS DD Concatenation

Two types of datasets are concatenated and allocated to the IMS ddname by File-AID for IMS/ISPF. The first is the PSB library that contains the PSB load modules that File-AID for IMS uses in its processing. The load library and the PSBs are defined to File-AID for IMS when it is installed at your site. If you use only dynamic PSBs, you do not have to generate any PSBs or specify a PSB library. If you use static PSBs, you need to specify a PSB library that contains the PSB you will use.

The second type of dataset is the DBD library that contains the DBD load module you defined and generated to describe the database you want to manipulate. Later sections describe the primary options of File-AID for IMS/ISPF and how to specify the DBD you want to use and the DBD libraries that File-AID for IMS should search to find that DBD.

The allocation and de-allocation of the IMS DD concatenation is always handled by File-AID for IMS/ISPF. An error occurs when you invoke File-AID for IMS/ISPF if you already allocated a dataset to this DD statement.

The IMS DD concatenation is not required for File-AID for IMS/ISPF functions that are run as BMP programs.

File-AID for IMS/ISPF normally handles the allocation and de-allocation of the following DD statements for DL/I processing:

- DFSRESLB DD
- DFSVSAMP DD
- RECON DDs

Default datasets for the first two are defined to File-AID for IMS when it is installed at your site. In DL/I mode, if you allocate any of these DD statements before invoking File-AID for IMS/ISPF, it does not attempt to allocate or de-allocate them. In BMP mode, the DFSRESLB DD is freed and allocated to what was defined at the install. The datasets you allocate to these DD statements are not validated.

DFSRESLB DD Concatenation

The dataset allocated to the DFSRESLB DD contains the IMS nucleus and required action modules.

If the IMS database dataset names used by a DL/I region are to be obtained from the IMS dynamic allocation member (MDA), then the MDA library needs to be included here also. In addition, any libraries containing IMS exits (such as the HDAM randomizing exit if it is not one of the IMS-supplied randomizers) need to be included here. All DFSRESLB datasets need to be MVS-authorized libraries.

RESLIB concatenations are treated differently from other ddname concatenations. If RESLIB datasets are preallocated, or are specified on the IMS Parameters screen, the DFSRESLB concatenation list defined to the environment is not used. This exclusion is done to assure that there is no unintentional mixture of IMS releases specified in the RESLIB concatenation.

TASKLIB/STEPLIB/MDALIB

In addition to allocating RESLIB datasets, File-AID for IMS/ISPF now constructs a TASKLIB or STEPLIB concatenation that is used when IMS is accessed. Creating this concatenation allows IMS to access non-authorized load libraries, such as MDA libraries or third-party software packages. The new DSN and VIEW commands provide a convenient means to view concatenation lists that are in effect for the current session. Refer to “DSN” on page 11-12 and “VIEW” on page 11-43 for additional information about these commands.

DFSVSAMP DD

The dataset allocated to the DFSVSAMP DD contains buffer information required by the DL/I Buffer Handler. This DD statement is not required for File-AID for IMS/ISPF functions that run as BMP programs.

RECON DDs

When accessing a database using an IMS DL/I region, DBRC can be used to control access to the database and to record the logs used for recovery. DBRC writes this information to the RECON1 and RECON2 DDs. If using DBRC, these datasets must be allocated to the DL/I region. Since it is important that the correct RECON DDs be used, the preferable way for them to be allocated is to let IMS dynamically allocate them using the RECON1 and RECON2 dynamic allocation members in the IMS dynamic allocation library. They can also be allocated from a CLIST, a LOGON PROC, a security exit, or they can be specified by Option 0.3, IMS Parameters. Refer to the *File-AID for IMS/ISPF Installation Guide* for more information.

Allocation of the RECON DDs is not required for File-AID for IMS/ISPF functions that run as BMP programs.

Database DDs

The DBD for your database specifies the unique ddname that is associated with each database dataset. IMS requires the database dataset to be allocated to the ddname before any DL/I calls are issued. Each option of File-AID for IMS/ISPF that uses a database, with the exception of those that run as BMP programs, enables you to specify the correct dataset name for each DD statement so that File-AID for IMS/ISPF can then handle the allocation of the database. Each of those options is explained later, where you will learn how to specify database dataset names. Do not allocate any database datasets before invoking File-AID for IMS/ISPF.

IMS PROCLIB and DFSESL Concatenations

When you specify the SSM IMS parameter on either a DL/I or BMP parameter string, the system attempts to allocate appropriate datasets to the PROCLIB and DFHESL ddnames for use during edit and browse sessions. In addition, JCL that executes DL/I or BMP jobs contains the appropriate concatenations of these ddnames.

IEFRDER DD

When you change the contents of a database, IMS writes a detailed record of the update activity to the IEFRDER DD.

When using Option 2 or Option 4.2 to edit or load a database, specify whether File-AID for IMS is to allocate a log dataset to the IEFRDER DD. This specification is described in detail in Chapter 4, “Browse/Edit” and Chapter 6, “Extract/Load”. For Option 3.1, Initialize Data Base, a log is always allocated unless the allocation is overridden through the File-AID for IMS/ISPF security exit routine that your installation can optionally create. The security exit routine is described later in this section. The following options control disposition of the IMS log dataset:

1. If you enter AK on the appropriate screen, a log dataset is allocated and cataloged when IMS becomes active. A detailed record of all update activity is written to this dataset as you change the contents of the database. When you terminate the function, the batch job is completed successfully or the system abends and the log dataset is cataloged.

   If your TSO-PREFIX matches your TSO-ID, the log dataset name is formatted as follows:

   ```
   tso-id.IMSLOG.Dyymmdd.Thhmmss.dbd-name
   ```

tso-id	Your TSO user ID, up to 7 characters.
yymmdd	The Gregorian date when the log dataset is created.
hhmmss	The hour, minute, and second when the log dataset is created.
dbd-name	The name of the primary DBD used during the edit session, up to 8 characters.

   If your TSO-PREFIX does not match your TSO-ID, the log dataset name is formatted as follows:

   ```
   tso-prefix.tso-id.IMSLOG.Dyymmdd.Thhmmss.dbd-name
   ```

tso-prefix	Your TSO user PREFIX, up to 7 characters.

2. If you enter AD on the appropriate screen, File-AID for IMS processes as described above, except that when you terminate the function or the batch job is completed

successfully, the cataloged log dataset is deleted. If an abend occurs during processing, the log dataset remains cataloged. This action is the automatic specification for Option 3.1, Initialize Data Base.

3. If you enter N on the appropriate screen, a log dataset is not created. The IEFRDER DD is allocated to DUMMY. Note that IMS requires a log if the PSB has update intent and DBRC is being used. In this case File-AID for IMS will require the field to be AK or AD.

For the Edit function, if you manually allocate a dataset to the IEFRDER DD before you invoke File-AID for IMS/ISPF and then enter AK or AD on the Data Base Specification screen, File-AID for IMS overrides your dataset allocation and processes as described above. If you enter N on the screen, your dataset allocation is not changed. The dataset you allocated is used as the log dataset and remains allocated when you terminate your edit session. For the Initialize and Load (batch job type) functions, a manually allocated IEFRDER DD is not used.

The IEFRDER DD is not used in the Edit or Load function when it is run as a BMP program.

Your entries for the log dataset usage can be changed through a File-AID for IMS/ISPF security exit routine that your installation can optionally create. For example, assume your installation specifies through the security exit that log datasets are to be created for all users when their edit sessions start, then deleted when they end their edit sessions. If you enter AK or N on the Data Base Specification screen when you begin an edit session, you will notice as you leave the session that your specification was changed to AD. After the security exit sets the log dataset usage indicator to the installation default, File-AID for IMS processes as described in the preceding paragraphs.

For additional information on your installation's security exit routine and database recovery procedure, contact the person responsible for File-AID for IMS/ISPF at your installation.

The log dataset created by File-AID for IMS/ISPF can be used in a database recovery procedure (for example, the Data Base Backout utility described in the *IMS/ESA Utilities Reference Manual* or the Data Base Recovery Control (DBRC) feature).

Should it be necessary to execute the IMS Batch Backout utility, you can follow the normal recovery procedure if the activity to be backed out was performed using a static PSB. If you were using a dynamic PSB, the sample JCL shown below should be used. This JCL consists of three jobs that can be run separately or combined into one or more JCL streams.

JOB #1 copies the File-AID for IMS log dataset to tape. This job is required if your system runs under IMS Version 1.2 or earlier because these versions of IMS support backing out changes to a database only from a tape.

Figure 3-1. Job #1 JCL - Copy File-AID for IMS Log Dataset to Tape

```
//*****************************************************************
//*      JOB # 1 - COPY File-AID for IMS LOG DATASET TO TAPE
//*****************************************************************
//COPY     EXEC PGM=IEBGENER
//SYSPRINT DD SYSOUT=*
//SYSUT1   DD DSN=File-AID.log.dataset,DISP=SHR
//SYSUT2   DD DSN=your.tape.dsn,DISP=(NEW,CATLG),
//            LABEL=(1,SL,RETPD=5),
//            UNIT=TAPE,DCB=(RECFM=VB,LRECL=1044,
//            BLKSIZE=1048)
//         DD DUMMY
```

JOB #2 generates PSB IXPPSB00. Code this PSB as you would any other PSB for the database that is to be backed out. Take note of the following requirements:

- KEYLEN must match your DBD's maximum concatenated key length.
- PROCOPT must be A.
- A SENSEG statement must be coded for all segments in your database.
- PSBNAME must be IXPPSB00.
- The PSB must *not* be linked into File-AID for IMS's PSB library.
- The PSB library member name on the PSBLINK step must be IXPPSB00.

There is nothing special about this PSBGEN JCL. Simply code the source for the PSB as described above and use existing methods to generate the PSB.

Figure 3-2. Job #2 JCL - Generate PSB for Backout Job

```
//*****************************************************************
//*               JOB #2 - GENERATE PSB FOR BACKOUT JOB
//*****************************************************************
//PSBGEN1  EXEC PGM=IEV90,PARM='NODECK,LOAD'
//SYSLIB   DD DSN=IMSVS.MACLIB,DISP=SHR
//         DD DSN=SYS1.MACLIB,DISP=SHR
//SYSUT1   DD UNIT=(SYSDA,SEP=SYSLIB),
//            SPACE=(CYL,(10,5)),DSN=&SYSUT1
//SYSPRINT DD SYSOUT=*
//SYSLIN   DD DISP=(,PASS),UNIT=SYSDA,
//            SPACE=(80,(100,100,0)),DCB=BLKSIZE=400,
//            DSN=&&OBJMOD
//SYSPUNCH DD DUMMY
//SYSIN    DD *
********************SAMPLE PSB*********************
       PRINT    GEN
       PCB      TYPE=DB,DBDNAME=dbdname,KEYLEN=xx,
                PROCOPT=A
       SENSEG   NAME=ROOT,PARENT=0
       SENSEG   NAME=CHILD1,PARENT=ROOT
       SENSEG   NAME=CHILD11,PARENT=CHILD1
       SENSEG   NAME=CHILD2,PARENT=ROOT
       SENSEG   NAME=CHILD21,PARENT=CHILD2
       PSBGEN   LANG=PLI,PSBNAME=IXPPSB00,CMPAT=YES
       END
//*
//PSBLINK  EXEC PGM=DFSILNK0,PARM='XREF,LIST',COND=(0,LT)
//STEPLIB  DD DSN=IMSVS.RESLIB,DISP=SHR
//SYSLIN   DD DSN=&&OBJMOD,DISP=(OLD,DELETE)
//SYSPRINT DD SYSOUT=*
//SYSLMOD  DD DSN=your.psblib(IXPPSB00),DISP=SHR
//SYSUT1    DD UNIT=SYSDA,SPACE=(1024,(100,10)RSLE),DISP=(,DELETE)
```

JOB #3 executes the IMS backout utility.

IMSLOGR	Specify the log dataset created in your edit session or the tape dataset created in JOB #1.
SYSIN	The first checkpoint issued during an edit session is IX000001. To backout all changes applied during an edit session, specify IX000001. Additional checkpoints are incremented by one (for example, IX000002, IX000003, etc...). The intervals where checkpoints are taken are described in "RECOVERY (Edit only)" on page 11-36.
ddname1, 2,...	Specify all ddnames and corresponding database datasets that are required for this database. A list of these ddnames and database datasets is displayed on the Data Base Dataset Specification screen.

Figure 3-3. Job #3 JCL - Execute IMS Backout Utility

```
//*****************************************************************
//*            JOB #3 - EXECUTE IMS BACKOUT UTILITY
//*****************************************************************
//*
//BACKOUT  EXEC PGM=DFSRRC00,PARM='DLI,DFSBB000,IXPPSB00'
//STEPLIB  DD DSN=IMSVS.RESLIB,DISP=SHR
//DFRESL   DD DSN-IMSVS.RESLIB,DISP=SHR
//DFSVSAMP DD DSN=your.dfsvsamp.pds(member),DISP=SHR
//IMS      DD DSN=your.psblib.library,DISP=SHR
//         DD DSN=your.dbd.library,DISP=SHR
//IMSLOGR  DD DSN=File-AID.log.dataset,DISP=OLD
//*IMSLOGR DD DSN=your.tape.dsn,DISP=OLD
//IEFRDER  DD DSN=ims-log-dataset-for-backout-utility,
//            DISP=(,DELETE),UNIT=SYSDA,SPACE=(TRK,(10,10),RLSE),
//            DCB=(RECFM=VB,LRECL=1044,BLKSIZE=1048)
//SYSPRINT DD SYSOUT=*
//ddname1  DD DSN=database.dataset1,DISP=OLD
//ddname2  DD DSN=database.dataset2,DISP=OLD
//*
//SYSIN    DD *
CHKPTIX000001
/*
//
```

Chapter 4. Browse/Edit

Options 1 and 2, Browse and Edit, enable you to browse or edit an IMS database in a DL/I or BMP region.

When browsing in a DL/I region, the database is allocated with disposition share (SHR) and cannot be updated. When editing in a DL/I type region, the database is allocated with disposition OLD unless it is a DBRC registered database in which case it is allocated with a disposition of share (SHR). These default allocation dispositions can be overridden by the security exit routine in use at your installation. See the person responsible for File-AID for IMS at your installation for further information.

When browsing or editing in a BMP region, the database is online to the IMS/DC or DBCTL region.

The screens displayed are identical for both the browse and edit options except for the screen titles and the Create Audit Trail and IMS Log Dataset Usage fields on the Data Base Specification screen. This chapter describes the functions of the edit option. Except where noted, all functions also apply to browse.

You can browse and edit HISAM, SHISAM, HDAM, HIDAM, LOGICAL, DEDB, and MSDB (non-terminal related) databases. You can browse HSAM, SHSAM, INDEX, and MSDB (terminal-related) databases. Refer to “DL/I Access Methods Supported” on page 3-3 for additional information.

You can use File-AID for IMS/ISPF’s Edit function to insert segments into an empty database if the database has been properly initialized through a load PSB. You can initialize a database by inserting an initial root segment using File-AID for IMS/ISPF Option 3.1, DFSDDLT0, or some other utility program. An empty database must be initialized before you edit it with File-AID for IMS/ISPF.

Browse/Edit Conversation Flow

Figure 4-1 on page 4-2 provides a pictorial summary of the flow of the Browse/Edit conversation. This chapter describes the screens in the conversation and their valid commands.

Figure 4-1. Browse/Edit Conversation Flow

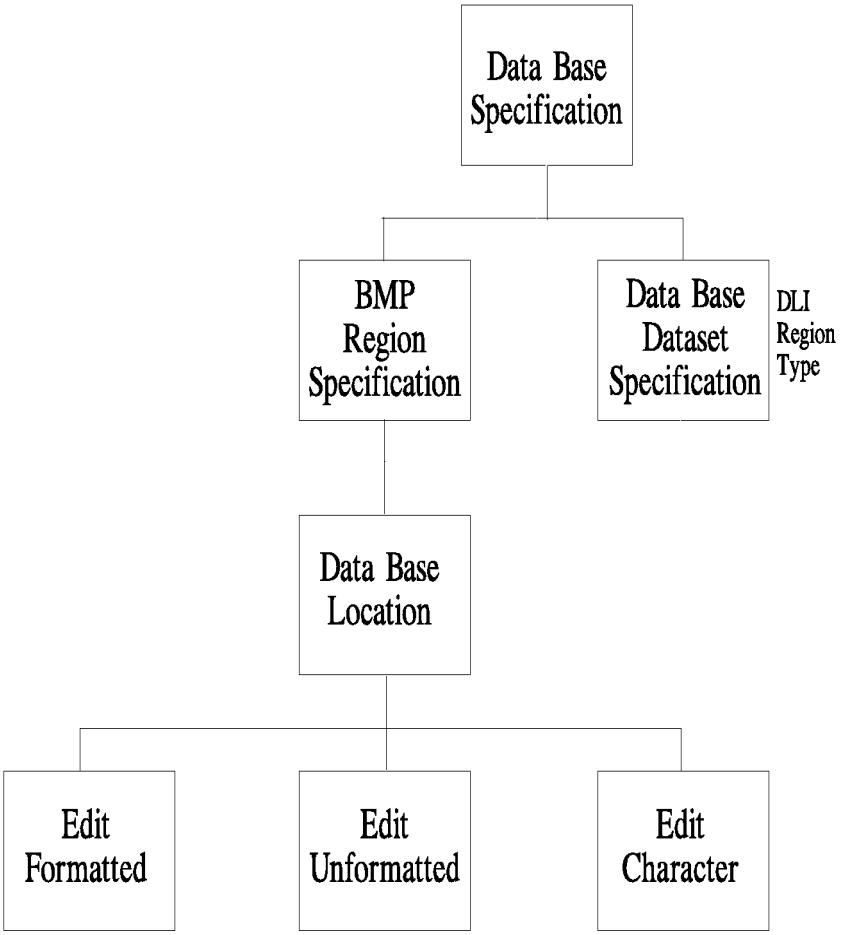

Database Specification

When doing a browse or edit, you can use either a static PSB or dynamic PSB. The following general description of the conversation flow assumes the use of a dynamic PSB. The process is similar when using a static PSB.

The first step in the conversation requires that you specify the database information, which includes the following:

- The IMS region type — DL/I or BMP.
- The name of the DBD that describes the database you want to edit.
- The name of the DBD load module library where the DBD resides.
- Whether you want to use secondary indexing. Refer to page 4-65 for more information.
- Whether you want to exclude any segment types (DL/I and BMP modes only). Refer to page 4-14 for more information.
- Whether you want an audit trail of your edit session created (edit mode only).
- Whether you want to use an IMS log dataset during your edit session (DL/I region type only).

If you intend to use a segment layout during your edit session, you must also specify the following:

- The name of the segment/layout cross-reference library and member that correspond to the DBD you specified.
- The name of the library that contains your COBOL or PL/I segment layouts.

Once you complete the specifications for the database, a second screen, based on the region type, is displayed so that you can specify additional information.

DL/I Region

If you specify a DL/I region type, you must also specify the dataset names of the database you want to edit.

BMP Region

If you specify a BMP region type, the BMP region associated with the current environment is used during the browse/edit session.

Database Location

At this point in the conversation, File-AID for IMS/ISPF has loaded the IMS program load modules and established the control region based on the region type specified within your TSO address space. The Data Base Location screen serves as the anchor point for the rest of the conversation. From here, there are several ways to control the edit session.

The screen lists each segment in the database on a separate line in hierarchical order. You can begin editing with any segment type. For the selected segment type, you can start with a specific segment occurrence in the database (by specifying the key value of a segment) or the first segment occurrence in the database. You can then select a segment, an occurrence of that segment, and edit your selection using the Formatted, Unformatted, or Character mode.

Edit Formatted

The Formatted screen displays the contents of a specific segment occurrence with the COBOL or PL/I layout on the left side of the screen and the data on the right. You can scroll up and down through the segment contents and type over any data that you want to change. In the browse option, you cannot type over any segment data.

Edit Unformatted

The Unformatted screen displays the contents of a segment occurrence in a three-line vertical hexadecimal format. You can scroll up and down through the segment contents and type over any data that you want to change.

Edit Character

The Character screen looks very much like ISPF's edit screen—one segment per line in character format. The segment occurrence you specify is shown at the top of the screen body. The remainder of the screen body consists of a hierarchically sequential listing of the segments that follow the selected segment in the database. You can scroll left or right to view segment contents and scroll down to move hierarchically through the database.

Edit Database Specification

The Data Base Specification screen is the first screen displayed in the edit conversation. There are two variations of this screen depending on whether you intend to use dynamic or static PSBs. For initial use, at least in a DL/I region type, we suggest you use a dynamic PSB because it is more convenient.

If both dynamic and static PSB processing are supported in the current environment, you can enter the XPSB command on either screen to switch to the alternate screen. If only one of these modes is allowed, the XPSB command results in the display of a message indicating that the alternate type of PSB is not supported in the current environment.

PSB processing for your ISPF session is set on the System Parameters screen. Figure 4-2 is displayed if you entered **D** in the Dynamic or Static field on the System Parameters screen. Figure 4-4 on page 4-9 is displayed if you entered **S**. Refer to "System Parameters" on page 2-3 for additional information.

Use the new DSN, ENV, and VIEW commands to view the dataset concatenation list for the environment in effect for the current session, to select another environment for the session, and to view the environment settings for the current environment, respectively. For more information about these commands, refer to Chapter 11, "Primary Commands".

Dynamic PSB

Figure 4-2. Edit - Data Base Specification Screen (Dynamic PSB)

```
File-AID for IMS ----- Edit - Data Base Specification (Dynamic PSB) -----------
COMMAND ===>
ENV: DEV1 - DEVELOPMENT ENVIRONMENT WITH CONCATENATIONS
                Region type . . BMP        (DLI or BMP)  BMP AGN = IMS6RACF
         + DBDLIB dataset 1 . . XXXXXXXX.FISAMP.DBDLIB
                  Dataset 2 . .
                     Member . .            (Blank or pattern for member list)
     Use secondary indexing . . N          (Y = Yes; N = No)
           Exclude segments . . N          (Y = Yes; N = No; DLI and BMP only)
--------------------------------------------------------------------------------
          Use COBOL layouts . . Y          (Y = Yes; N = No)
             + XREF dataset . .
                     Member . .            (Blank or pattern for member list)

   + COBOL layout dataset 1 . .
                  Dataset 2 . .
--------------------------------------------------------------------------------
         Create audit trail . . N          (Y = Yes; N = No)

For DLI processing specify the following:
      IMS log dataset usage . . N          (AK = Allocate; keep after edit
                                            AD = Allocate; delete after edit
                                            N  = Do not use log dataset)
```

Note: The presence of a highlighted plus (+) or minus (-) sign indicates dataset concatenations. Refer to "Dataset Concatenation Support" on page 3-1 for additional information.

Current Environment

The top of the screen displays the environment definition name with its description that is in effect for the current session.

Region type

Enter one of the following:

DLI Accesses and processes offline databases in a batch environment created within TSO. The databases must be either offline from IMS DC and CICS regions or available under IMS data sharing.

BMP Accesses and processes online databases in a BMP environment created within TSO. The databases must be online to an IMS DC region or a DBCTL region. Region type must be BMP to access FAST PATH databases. If a DEDB database has multiple areas and some areas are down, File-AID for IMS skips over the down areas and continues processing.

BMP AGN

The IMS configuration at your installation determines whether the Application Group Name (AGN) is required for BMP region types. If it is required, enter the appropriate AGN before processing a BMP region.

Note: Because BMP region processing is determined when you select its associated environment, the BMP Region Selection screen is no longer displayed. If the BMP region associated with the current environment is not the one you want to use, execute the ENV command to display the File-AID for IMS/ISPF panel where you can select the environment that contains the appropriate BMP region. Refer to "ENV" on page 11-13 and "Select IMS Environment" on page 2-2 or more information.

DBDLIB dataset 1 and Dataset 2

Enter one or two DBD load library dataset names. If you enter two, File-AID for IMS searches the first before the second to locate the DBD member.

Member

Enter the DBD member that describes the database you want to edit. If you enter a pattern or leave this field blank, a list is displayed from which you can select a member.

Use secondary indexing

Indicate whether you want to access the primary DBD through a secondary index. Refer to page 4-65 for details.

Exclude segments

Indicate whether you want to exclude segments from processing for DL/I and BMP region types. If you enter Y, the Exclude Segment Specification screen (page 4-14) is displayed before you proceed to the Data Base Dataset Specification screen. If you enter N, you proceed directly to the Data Base Dataset Specification screen with all segment types in the DBD included for processing.

Use COBOL (or PL/I) layouts

Indicate one of the following:

Y Uses segment layouts as templates over the data you want to edit. If you specify Y, you must also enter the segment/layout cross-reference library name, a member within that library, and at least one segment layout library name.

N Does not use layouts. If you specify N, all other input fields in this section are ignored. This action allows you to use the unformatted and/or character editing modes with a database that does not require segment layouts or a segment/layout XREF.

Note: File-AID for IMS/ISPF retains the association between language cross-reference and segment layout.

XREF dataset

Enter the segment/layout cross-reference library name if you specified **Y** in the Use COBOL (or PL/I) layouts field.

Member

Enter the member in the segment/layout XREF library that associates a segment layout with each segment type in the DBD. File-AID for IMS uses the appropriate segment layout when editing a segment in formatted mode.

The segment layouts specified in the Segment/Layout XREF Member must reside in the segment layout library concatenation defined for the product.

The segment/layout XREF member is created and maintained with the use of Option 7, XREF, described in detail in Chapter 9, "Segment/Layout Cross-Reference".

If you enter a pattern or leave this field blank, a list is displayed from which you can select a member.

COBOL (or PL/I) layout dataset1 and Dataset 2

If you enter only one segment layout library name, you can enter it on either dataset name line. If you enter two, they can appear in any order. Each library can be any of the valid segment layout library organization types. The presence of a highlighted plus (+) or minus (-) sign indicates dataset concatenations. Refer to "Dataset Concatenation Support" on page 3-1 for additional information.

When searching for a segment layout, File-AID for IMS searches the Dataset 1 library before the Dataset 2 library, and then searches all the datsets listed in the first layout concatenation before searching the second layout concatenation. Refer to "Segment Layout Dataset Concatenation" on page 3-4 for details.

If your installation has both the COBOL and PL/I language support options of File-AID for IMS installed, ensure that your current language mode is compatible with the segment layout and segment/layout XREF dataset information you specify. Your current language mode is indicated by the word COBOL or PL/I preceding the Use Layouts and the Layout Dataset fields. To change language mode, enter the COBOL or PLI primary command on the COMMAND line.

File-AID for IMS/ISPF maintains separate concatenations of COBOL and PL/I layouts and cross-reference datasets. These concatenations automatically toggle between the COBOL and PL/I sets when you enter the COBOL or PLI command. Layouts and cross-reference datasets that you have entered for use with COBOL are kept separate from those you have entered for PL/I.

Create Audit Trail

This field is displayed only if you are in edit mode. Indicate whether you want an audit trail of your edit session created. Refer to "Audit Trail Feature" on page 4-75 for more information.

IMS Log Dataset Usage

This field is displayed only if you are in edit mode. If you specified a DL/I region type, you must enter one of the following values:

AK Writes a detailed record of your database updates to an IMS log dataset. A log dataset is allocated, cataloged, and retained when you terminate the edit session.

AD Allocates a cataloged log dataset. The dataset is deleted when you terminate the edit session.

N Does not allocate a log dataset.

For additional information about the IMS log dataset and its usage, refer to "IEFRDER DD" on page 3-9.

Terminating the Screen

Do one of the following to terminate the Data Base Specification (Dynamic) screen:

- Press Enter. Depending on the information you entered, up to two member lists are displayed in the following sequence:
  - A DBD library member list. If two or more DBD libraries are concatenated, the member list is a sorted and merged list of all members in all libraries.
  - A segment/layout XREF member list. If two or more XREF libraries are concatenated, the member list is a sorted and merged list of all members in all libraries.

  If you enter the END command from either member list screen, you are returned to the Data Base Specification screen. Additional information on how to use the member lists is provided in the following examples (refer to the screen shown in Figure 4-2 on page 4-4):

  - On the Data Base Specification screen, leave both the DBD Member and the Segment/Layout XREF Member fields blank. Select a DBD from the DBD member list and a segment/layout XREF member from the XREF member list.

    After editing your database, decide whether to select another DBD for processing. Enter END on the Data Base Location screen to return directly to the DBD member list. The segment/layout XREF member list is not displayed when moving backward in the conversation. After selecting a new DBD member and new segment/layout XREF member, you can again proceed to the editing screens.
  - On the Data Base Specification screen, leave the DBD Member field blank but specify a segment/layout XREF member. Select a DBD that corresponds to the segment/layout XREF member you specified and proceed to the editing screens.

    Enter END on the Data Base Location screen to return to the DBD member list, and select another DBD for processing. An error occurs because the original segment/layout XREF member you specified does not correspond to the newly selected DBD. You have to return to the Data Base Specification screen to specify the correct segment/layout XREF member.

  It is also possible to progress through one or both of the member list screens, reach an error condition before you enter the editing screens, and have File-AID for IMS return you to the Data Base Specification screen. When this happens, members selected up to the point of the error are filled in on the Data Base Specification screen.

- Enter END or RETURN to return to the Primary Option Menu.

Member List Processing

If you did one of the following on the Data Base Specification screen, a member list as shown in Figure 4-3 is displayed when partitioned datasets are specified:

- Left the Member field blank. A list of the members in the partitioned dataset is displayed.
- Entered a pattern as the member name. A pattern is a partial member name followed by an asterisk. The pattern, including the asterisk, cannot contain more than eight characters. For example, the pattern PROGRAM* might display the following list:

```
PROGRAM1
PROGRAM2
PROGRAM3
```

Figure 4-3. Member List Screen

```
XREF Library Member List -------------------------------------------------------
COMMAND ===>                                                 SCROLL ===> PAGE
    NAME   CONCAT   DESCRIPTION                CREATED   LAST MODIFIED     ID
  DCLT2      3                                 02/04/27  02/06/01 10:44  TSOID01
  DCLT3      4                                 02/04/27  02/06/05 12:47  TSOID01
  IXHCUST    2                                 02/09/12  02/09/12 15:32  TSOID01
  LIBRTST    1
  LIXPORDR   4                                 02/03/12  02/03/12 08:56  TSOID01
  LLORDR     4 LOGICAL ORDER DBD               02/07/27  02/07/27 12:32  TSOID01
  LORDR      1
  LPCUST     4 PHYSICAL CUSTOMER DBD           02/07/27  02/09/18 14:57  TSOID01
  LPORDR     4 PHYSICAL ORDER DBD              02/07/27  02/07/10 15:00  TSOID01
  LPPART     4 PHYSICAL PART DBD               02/07/27  02/05/11 09:06  TSOID01
  PCUST      1
  PORDR      1
  PPART      1
  RLORDR     3 LOGICAL ORDER DBD               02/07/27  02/07/27 12:32  TSOID01
  RPCUST     3 PHYSICAL CUSTOMER DBD           02/07/27  02/09/18 14:57  TSOID01
  RPORDR     3 PHYSICAL ORDER DBD              02/07/27  02/07/10 15:00  TSOID01
  RPPART     3 PHYSICAL PART DBD               02/07/27  02/05/11 09:06  TSOID01
  RXPORDR    3                                 02/03/12  02/03/12 08:56  TSOID01
  VARIABLE   5                                 02/02/25  02/03/10 09:23  TSOID01
  *END*
```

On certain dataset specification screens, you can specify multiple partitioned datasets. Therefore, it is possible for you to receive multiple member list screens (one for each partitioned dataset specified without a member) before proceeding to the next screen in the function. The member lists are displayed in the sequence that the datasets appear on the Dataset Specification screen.

You can scroll through the list using the UP/DOWN and RIGHT/LEFT commands. The RIGHT/LEFT commands toggle between alternate presentations of member list information. The fields on the two displays vary depending on the type of library for which the member list is being displayed. In many cases, the member list is displayed again with an automatic scroll to the member just processed when you terminate a function where a member list is invoked. You can then select another member or enter the END command to return to the next higher level screen. When the member list is displayed, it does not include new members created by another user or, in split screen mode, on the other logical screen. To display an up-to-date list, return to the Primary Option Menu and select the function again.

You can enter a LOCATE command on any member list screen. This command causes a direct scroll to the specified member name (that is, the entry for the specified name appears as the first line following the header lines). If the specified name is not found, scrolling is to the member name that, in the standard collating sequence, immediately precedes the specified name.

You can select a member from the list in one of the following ways:

- Move the cursor down the left side of the screen, and enter S next to the desired member name.
- Enter SELECT in the Command field.

The LOCATE command also allows you to select a member that is not in the list. In many File-AID for IMS/ISPF functions, selection of a non-existent member causes a new member to be created.

Static PSB

Figure 4-4. Edit - Data Base Specification Screen (Static PSB)

```
File-AID for IMS ----- Edit - Data Base Specification (Static PSB) ------------
COMMAND ===>
ENV: DEV1 - DEVELOPMENT ENVIRONMENT WITH CONCATENATIONS
                Region type . . BMP        (DLI or BMP)  BMP AGN = IMS6RACF
         + PSBLIB dataset 1 . . 'IX.IMSTEST.PSBLIB'
                  Dataset 2 . .
                     Member . . IXPPSBHA   (Blank or pattern for member list)

         + DBDLIB dataset 1 . . 'IX.IMSTEST.DBDLIB'
                  Dataset 2 . .
                     Member . .            (Blank or pattern for member list)
-------------------------------------------------------------------------------
          Use COBOL layouts . . Y          (Y = Yes; N = No)
+ Segment/Layout XREF dataset .

   + COBOL layout dataset 1 . .
                  Dataset 2 . .
-------------------------------------------------------------------------------
         Create audit trail . . N          (Y = Yes; N = No)

For DLI processing specify the following:
      IMS log dataset usage . . N          (AK = Allocate; keep after edit
                                            AD = Allocate; delete after edit
                                            N  = Do not use log dataset)
```

Note: The presence of a highlighted plus (+) or minus (-) sign indicates dataset concatenations. Refer to "Dataset Concatenation Support" on page 3-1 for additional information.

Current Environment

The top of the screen displays the environment definition name with its description that is in effect for the current session.

Region type

Enter one of the following:

DLI Accesses and processes offline databases in a batch environment created within TSO. The databases must be either offline from IMS DC and CICS regions or available under IMS data sharing.

BMP Accesses and processes online databases in a BMP environment created within TSO. The databases must be online to an IMS DC region or a DBCTL region. Region type must be BMP to access FAST PATH databases. If a DEDB database has multiple areas and some areas are down, File-AID for IMS skips over the down areas and continues processing.

BMP AGN

The IMS configuration at your installation determines whether the Application Group Name (AGN) is required for BMP region types. If it is required, enter the appropriate AGN before processing a BMP region.

Note: Because BMP region processing is determined when you select its associated environment, the BMP Region Selection screen is no longer displayed. If the BMP region associated with the current environment is not the one you want to use, execute the ENV command to select the environment that contains the appropriate BMP region. Refer to "ENV" on page 11-13 and "Select IMS Environment" on page 2-2 or more information.

PSBLIB dataset 1 and Dataset 2

Enter one or two PSB load library names. When two PSB libraries are entered, File-AID for IMS searches the first before the second to locate the PSB member.

Member

Enter the PSB member that includes the DBDs you want to edit. If you enter a pattern or leave this field blank, a list is displayed from which you can select a member.

DBDLIB dataset 1 and Dataset 2

Enter one or two DBD load library dataset names. If you enter two, File-AID for IMS searches the first before the second to locate the DBD member.

Member

Enter the DBD member that describes the database you want to edit. If there are multiple DBDs of that name, if you enter a pattern, or if you leave this field blank, a list is displayed with the acceptable DBDs in the PSB.

Use COBOL (or PL/I) layouts

Indicate one of the following:

Y Uses segment layouts as templates over the data you want to edit. If you specify Y, you must also enter the segment/layout XREF library name and at least one segment layout library name. You should enter Y if you want to use layouts for **any** database you plan to edit.

N Does not use layouts. If you specify N, all other input fields in this section are ignored. This action allows you to use the unformatted and/or character editing modes but not the formatted mode.

Note: File-AID for IMS/ISPF retains the association between language cross-reference and segment layout.

Segment/Layout XREF dataset

Enter the segment/layout cross-reference library name if you specified **Y** in the previous field.

COBOL (or PL/I) layout dataset1 and Dataset 2

If you enter only one segment layout library name, you can enter it on either dataset name line. If you enter two, they can appear in any order. Each library can be any of the valid segment layout library organization types.

When searching for a segment layout, File-AID for IMS searches the Dataset 1 library before the Dataset 2 library, and then searches all the datsets listed in the first layout concatenation before searching the second layout concatenation. Refer to "Segment Layout Dataset Concatenation" on page 3-4 for details.

If your installation has both the COBOL and PL/I language support options of File-AID for IMS installed, ensure that your current language mode is compatible with the segment layout and segment/layout XREF dataset information you specify. Your current language mode is indicated by the word COBOL or PL/I preceding the Use Layouts and the Layout Dataset fields. To change language mode, enter the COBOL or PLI primary command on the COMMAND line.

File-AID for IMS/ISPF maintains separate concatenations of COBOL and PL/I layouts and cross-reference datasets. These concatenations automatically toggle between the COBOL and PL/I sets when you enter the COBOL or PLI command. Layouts and cross-reference datasets that you have entered for use with COBOL are kept separate from those you have entered for PL/I.

Create Audit Trail

This field is displayed only if you are in edit mode. Indicate whether you want an audit trail of your edit session created. Refer to "Audit Trail Feature" on page 4-75 for more information.

IMS Log Dataset Usage

This field is displayed only if you are in edit mode. If you specified a DL/I region type, you must enter one of the following values:

AK Writes a detailed record of your database updates to an IMS log dataset. File-AID for IMS allocates and catalogs a log dataset that is retained when you terminate the edit session.

AD Allocates a cataloged log dataset, then deletes the dataset when you terminate the edit session.

N Does not allocate a log dataset.

For additional information about the IMS log dataset and its usage, refer to "IEFRDER DD" on page 3-9.

Terminating the Screen

Do one of the following to terminate the Data Base Specification (Static) screen:

- Press Enter. If you did not specify a PSB member or specified a pattern, a list of PSB names is displayed. If you specified two PSB libraries, the member list is a sorted and merged list of all the acceptable PSB names.
  - Select one of the PSB names. The DBD Selection List for Static PSB screen (page 4-12) is displayed.
  - Enter END to return to the Data Base Specification (Static) screen.
- Enter END or RETURN to return to the Primary Option Menu.

DBD Selection List for Static PSB

The DBD Selection List for Static PSB screen, shown in Figure 4-5, is used to select one or more DBDs to edit within a single edit session (that is, a single scheduling of a DL/I or BMP region).

Figure 4-5. DBD Selection List for Static PSB Screen

```
File-AID for IMS  -----  DBD Selection List for Static PSB  -----   LINE  00001
COMMAND ===>                                                   SCROLL ===> CSR
-------------------------------------------------------------------------------
   Select ALL DBDs in PSB IXPPSBSA   ===> N      (Y = Yes; N = No)

                Use             Exclude   Segments             PCB   Secondary
Line   DBD     COBOL     XREF    More     in    in     PCB     Proc  Process
Cmd    Name    Layout   Member   Segs    PCB    DBD    Name    OPT   Sequence
---  --------  ------  --------  -----   ----------  --------  ----  --------
__   PORDR       Y     PORDR       N       5 OF 5    PORDRA    AP
__   PCUST       Y     PCUST       N       3 OF 3    PCUSTA    AP
__   PPART       Y     PPART       N       2 OF 2    PPARTA    AP
__   PORDR       Y     PORDR       N       5 OF 5    PORDRGO   GO
__   PCUST       Y     PCUST       N       3 OF 3    PCUSTGO   GO
__   PPART       Y     PPART       N       2 OF 2    PPARTGO   GO


S Selects the DBD(s) to process in this session
F Specifies the First DBD to process when multiple DBDs have been selected
H Graphically displays the Hierarchical structure of the DBD

Press Enter when all DBDs to process have been selected.
Use END to return to Data Base Specification Screen.
```

Select All DBDs in PSB

Consider the following before you select one or more DBDs to edit:

- Each DBD selected causes File-AID for IMS/ISPF to use additional memory.
- In a DL/I region, you need to provide the dataset names for **all** the selected databases.

Enter Y if you want to edit each of the DBDs in the same edit session. Then enter F next to the DBD that you want processed first.

Enter N if you want to edit one or more DBDs. Then, enter S next to the DBD Names that you want to edit. If you select more than one, you need to enter F next to the DBD that you want processed first.

When multiple DBDs are selected, the screen is displayed again when you end the edit of each DBD so that you can select the next DBD you want to edit.

Line Cmd

Enter one of the following:

S Indicates the DBD to process in this session.

F Indicates the first DBD that is to be processed when multiple DBDs are selected.

H Graphically displays the hierarchical structure of the DBD. After the hierarchy is displayed, you are returned to this screen to complete the DBD selection.

See Figure 11-6 on page 11-21 for an example of the hierarchy display.

DBD Name

Displays the database name.

Use Layout

The default value is set to the value specified in the Use Layouts field on the prior screen. If N, you can change the value to Y. You must then provide the XREF member.

If Y, the XREF member name is primed with the same name as the DBD name if the XREF library contains a member with this name. If the XREF library does not contain a member with the same name, the field is left blank and the Use Layout field is set to N.

Exclude More Segs

If a Y is entered, the Exclude Segment Specification screen (page 4-14) is displayed. This screen is used to exclude segments during edit.

Segments in PCB/in DBD

Displays information that can be used to determine if all the segments in the DBD are included in the PCB.

PCB Name

The IMS PSBGEN process allows a name to be specified for each DBD included in the PSB. This name is displayed because it may be useful to indicate the difference between two DBDs with the same name.

PCB Proc OPT

Displays the processing option specified for the DBD, which determines what DL/I functions are allowed. The field contains 1 to 4 characters. Each character indicates which functions are supported.

A	Allows get, insert, delete, and replace
G	Allows get
I	Allows insert
R	Allows get and replace
D	Allows get and delete
GO	Allows get without IMS locking the segment
P	Not relevant.

If an asterisk is displayed next to the PCB Proc OPT, this indicates that different processing options are specific on the various segments. The processing option that is the least restrictive is shown as the PCB Proc OPT.

The processing option can also be specified in the PSB for each segment. This option overrides what is specified for the PCB. The H line command displays the processing option in effect for each segment.

When doing a browse in a BMP environment, the locking level used by IMS is based on the processing option specified for the PCB. To reduce the number of locks, you can use a PCB with the GO or G processing option.

Secondary Process Sequence

This output field displays the name of the secondary index if the DBD uses one as the processing sequence. Refer to “Secondary Indexing” on page 4-65 for more information.

Terminating the Screen

Do one of the following to terminate the DBD Selection List for Static PSB screen:

- Press Enter when you have selected all the DBDs. All selected entries are validated. The next screen displayed is the Data Base Dataset Specification screen as shown in Figure 4-7 on page 4-16.
- Enter the END command to return to the Data Base Specification screen without selecting a DBD.
- Enter the RETURN command to return to the Primary Option Menu.

Exclude Segment Specification

The Exclude Segment Specification screen, shown in Figure 4-6, enables you to prevent segment types in a database from being viewed or accessed. This screen is displayed only when you enter Y in the Exclude Segments field on the Data Base Specification screen and specify BMP or DL/I region type processing.

Figure 4-6. EDIT – Exclude Segment Specification Screen

```
File-AID for IMS  ----  EDIT - Exclude Segment Specification  ------- LINE  001
COMMAND ===>                                                   SCROLL ===> PAGE

Exclude
 IND   -----Level-----  Segment-  --Description--  --Length--
       1 DBD-LORDR      ORDR010   ORDER ROOT               167
 __     2               ORDR020   ORDER LINE          50:  200 MULTI-RCD TYPE
 X_      3              ORDR030   ORDER STATUS              45
 __     2               ORDR040   ORDER SCRAP               40
 __     2               ORDRCUST  ORDR-CUST CNCAT          241 CONCATENATED SEG
                        ***  END  OF SEGMENT LIST  ***









Enter X to exclude segment from processing
Press Enter when excluded segments have been fully specified
Use END command to terminate Edit Exclude Segment Specification
```

Exclude Ind

Enter the X line command next to segment types you want to exclude. The specified segment type and all its hierarchically dependent segment types are excluded. Excluded segments are indicated by an asterisk in the Exclude Ind column. Excluded segments are protected by File-AID for IMS/ISPF. A root segment type can never be excluded.

Once you exclude a segment type, the exclusion is retained until you do one of the following:

- If you specify a different DBD, all exclusions for the current DBD are removed. You can switch between File-AID for IMS/ISPF options without affecting your exclusions as long as you continue to work with the same DBD.
- If you enter N in the Exclude Segments field on the Data Base Specification screen and move forward in the edit conversation, any exclusions previously specified for the current DBD are removed.
- If you enter the RESET primary command on the Exclude Segment Specification screen all exclusions are removed.

– If you exit File-AID for IMS/ISPF, all exclusions are removed.

Level

Displays the segment type's hierarchical level number in the database. For the root segment type, the primary DBD name is displayed next to the level number.

Segment

Indicates the name of the segment as specified in the DBD.

Description

Displays a 15-character segment description. This description is retrieved from the segment/layout cross-reference created in Option 7, XREF.

Length

Displays the segment length as specified in the DBD. For variable length segment types or multiple record type segments, both the minimum and maximum defined lengths are displayed.

For certain segment types, File-AID for IMS also displays additional information at the end of the segment line:

– LCHILD SEG is displayed for a logical child segment.

– CONCATENATED SEG is displayed for a concatenated segment.

– MULTI-RCD TYPE is displayed when a segment may have differing formats and each format requires a different segment layout to define the segment type. This situation is identified to File-AID for IMS in the segment/layout XREF, using the Segment/Layout XREF function.

– SEG NOT IN XREF is displayed in the following situations:

1. If a segment in the primary DBD load module is not represented in the corresponding DBD entry in the segment/layout XREF. This can happen if you manually deleted the segment from the XREF or added new segment types to your DBD since you created the XREF.
2. If you specified N for the Use Layouts field on the Data Base Specification screen.

Terminating the Screen

Do one of the following to terminate the Exclude Segment Specification screen:

- Press Enter to save the exclusions and move forward in the edit conversation to the Data Base Dataset Specification screen.
- Enter END if you want to terminate the segment exclusion process without saving any of the current exclusions you made. You are returned to the Data Base Specification screen with the previously specified exclusions restored.
- Enter RETURN to save your current exclusions and return to the Primary Option Menu.

Database Dataset Specification

The Data Base Dataset Specification screen, shown in Figure 4-7 on page 4-16, is used to enter the database dataset names associated with the database you want to edit. This screen is displayed after the Data Base Specification screen or, if you are using DL/I region type processing and excluded segment types, after the Exclude Segment Specification screen.

Figure 4-7. EDIT – Data Base Dataset Specification Screen

```
------ EDIT   ------ Data Base Dataset Specification (DBD-PORDR   )- LINE 00001
COMMAND ===>                                                  SCROLL ===> PAGE

Obtain DB Dataset Names from ===>  P  (P = Previously used with 'P' here,     S
                                       I = IMS dynamic allocation source)     H
                                                                              R
DBRC not active                                                            D
                                                                           I  L
                                                                           S  E
DBD      DDNAME   DATASET NAME                                   PASSWORD  P  V
-------- -------- ---------------------------------------------- -------- --- -
PORDR    PORDRDD  FISAMP.ORDER                                            OLD N
PCUST    PCUSTDD  FISAMP.CUSTOMER                                         OLD N
              *** END OF DATA BASE DATASET NAMES   ***









Press ENTER when data base datasets have been fully designated
Use END command to end Edit Data Base Dataset Specification
```

Obtain DB Dataset Names from

See “Obtain DB Dataset Names From” on page 4-17.

DBD

Displays the name of the primary DBD you entered on the Data Base Specification screen.

DDNAME

Displays the ddname of the first dataset group in the primary DBD.

DATASET NAME

Enter the database dataset name to be allocated to the DD name.

There are two conventions available to enter a database dataset name. If you enter every node in the dataset name, the name must be enclosed in apostrophes. If the first node of the dataset matches your TSO-ID, you can omit the first node and the apostrophes.

When a dataset name has a node identical to the DD name of the dataset, you can substitute an asterisk for that node. If a dataset name has more than one node equal to the DD name, you can substitute an asterisk for only one of the nodes.

A separate line is displayed for each additional dataset group in the primary DBD. The DBD NAME column is blank and the DDNAME column displays the DD name for the dataset group. Each line also has the database Dataset Name and Password fields

Any external DBDs that are directly referenced by the primary DBD (such as a secondary index DBD or a logically related DBD) are shown sequentially under the primary DBD with their DD name, Data Base Dataset Name, and Password fields. There can also be DBDs and DD names listed that are not directly referenced by the primary DBD. These are from DBDs that are indirectly related to the primary DBD through the primary’s external references. You must enter database dataset names for all listed DD names.

Once you enter a database dataset name on the Data Base Dataset Specification screen, it is retained from session to session (refer to "User Profile Dataset" on page 3-6). If you entered I in the Obtain DB Dataset Names from field, the dataset names are retained only if no dataset names exist in the user profile dataset for the associated database DD names. In subsequent sessions, File-AID for IMS/ISPF pre-formats those dataset name fields for which it has saved names.

PASSWORD

Specify the password if the database dataset is OS password-protected. The password for an OS password-protected dataset is not saved across sessions.

DISP

This is the disposition, which will be used to allocate the datasets. It is either SHR if the dataset will be allocated shared or OLD if the dataset will be allocated old. For File-AID for IMS functions, which do not update the dataset such as browse and extract, the datasets are allocated SHR. Functions, which update such as edit and load will cause the dataset to be allocated OLD unless the dataset name is the name registered in DBRC. If the dataset is the name registered in DBRC, the dataset is allocated SHR.

SHR LEV

This is N if the dataset is not registered in DBRC. If registered in DBRC, it is the DBRC share level of 0 through 3.

Obtain DB Dataset Names From

The dataset name field is initially set from the name you previously used for the dataset with P specified for the option. To use the dataset names that have been defined to IMS with the IMS Dynamic Allocation Utility (DFSMDA), enter an **I** in the Obtain DB Dataset Names From field (see Figure 4-7 on page 4-16). Specifying I here only causes File-AID for IMS to obtain the dataset names from the IMS Dynamic Allocation members. In all cases, File-AID for IMS dynamically allocates the IMS datasets.

If the dataset names cannot be obtained from the IMS Dynamic Allocation member, one of the following messages is displayed:

- **NO MDA MEMBER FOR DBD** is displayed if no member exists in the DFSRESLB dataset with the DBD name.
- **INVALID MDA MEMBER** is displayed if a member is found but it is not a valid dynamic allocation member. A valid dynamic allocation member is identified by the characters MDA near the start of the data.
- **DDNAME NOT IN MDA MEMBER** is displayed if the member does not contain an entry for the DDNAME.

If you specify P in the "Obtain DB Dataset Names from" field, the dataset name fields are obtained from your user profile.

Terminating the Screen

Do one of the following to terminate the Data Base Dataset Specification screen:

- After you enter the database dataset names, press Enter to move forward in the edit conversation to the Data Base Location screen.
- Enter the END command to return to the beginning of the edit conversation. The Data Base Specification screen is displayed. Any dataset names you entered are saved.
- Enter the RETURN command to terminate the edit conversation. Any dataset names you entered are saved, and the Primary Option Menu is displayed.

Edit Database Location

The Data Base Location screen, shown in Figure 4-8, is used to control the editing of your database. This screen is initially displayed after you press ENTER on the Data Base Dataset Specification screen for a DL/I region type or after processing the BMP Region Type Specification screen for a BMP region type. There is a pause before the screen is displayed because File-AID for IMS is loading the IMS program load modules and establishing the control region within your TSO address space. IMS remains active until you either move backward in the edit conversation from this screen or terminate the conversation.

Figure 4-8. EDIT - Data Base Location Screen

```
File-AID for IMS  ---  EDIT - Data Base Location  ----------------- LINE  00001
COMMAND ===>                                                  SCROLL ===> PAGE

Line                                          Key                 Key
Cmd -----Level----- Segment- --Description-Length-------------Value------------
__* 1 DBD-LORDR     ORDR010  ORDER ROOT      006
__    2             ORDR020  ORDER LINE      002
__     3            ORDR030  ORDER STATUS    002
__    2             ORDR040  ORDER SCRAP     008
__    2             ORDRCUST ORDR-CUST CNCAT 002
                         *** END OF SEGMENT LIST ***









S  -- Select Formatted        K  -- Key Specification, then Select Formatted
SU -- Select Unformatted      KU -- Key Specification, then Select Unformatted
SC -- Select Character        KC -- Key Specification, then Select Character
```

Line Cmd

Used to select a segment for editing. Refer to “Selecting a Segment” on page 4-19 for more information.

Level

Displays the segment type’s hierarchical level number in the database. For the root segment type, the primary DBD name is displayed beside the level number.

Segment

Indicates the segment name as specified in the DBD.

Description

Displays a 15-character segment description. This description is retrieved from the segment/layout cross-reference created in Option 7.

Key Length

Displays the segment key length. If the segment is non-keyed, zero is displayed.

Key Value

Displays up to 30 characters of the key value for each segment type. Additional information about this field is provided in the next section.

Selecting a Segment

When you initially enter the Data Base Location screen, your current position in the database is dependent on the type of database being edited.

For a database defined without a randomizing routine, the first root segment occurrence is retrieved and the key is placed in the Key Value column on the root segment line as shown in Figure 4-9. File-AID for IMS considers this root segment occurrence to be your current position in the database.

For an HDAM database, File-AID for IMS allows the user to specify a key value to retrieve the first segment in the database. This process reduces IMS's search time to retrieve a root segment for a database defined with a randomizing routine.

The Data Base Location screen indicates your current position by placing an asterisk in the Line Cmd field of all segment types in the hierarchical path to your current position. The first 30 positions of the key value for each segment occurrence in the hierarchical path to your current position are also shown.

Figure 4-9. EDIT - Data Base Location Screen - Selecting a New Segment

```
File-AID for IMS  ---  EDIT - Data Base Location  ---------------- LINE  00001
COMMAND ===>                                                     SCROLL ===> PAGE

Line                                          Key                Key
Cmd -----Level----- Segment- --Description-Length-------------Value------------
__* 1 DBD-PORDR     ORDR010  ORDER ROOT      006 AA2222
__   2             ORDR020  ORDER LINE      002 01
S_    3            ORDR030  ORDER STATUS    002 01
__   2             ORDR040  ORDER SCRAP     008
__   2             ORDR050  ORDR-CUST LCHLD 002
                        *** END OF SEGMENT LIST ***









S  -- Select Formatted        K  -- Key Specification, then Select Formatted
SU -- Select Unformatted      KU -- Key Specification, then Select Unformatted
SC -- Select Character        KC -- Key Specification, then Select Character
```

To change your current segment position from the Data Base Location screen, first enter the key value for each segment type in the hierarchical path to the segment occurrence you want. Then enter one of the six valid line commands shown at the bottom of the Data Base Location screen in the Line Cmd column of the segment type you want (refer to Figure 4-9). File-AID for IMS retrieves the new segment occurrence and then, based on the line command you specify, does one of the following:

S Enters the formatted editing mode (page 4-26).

SU Enters the unformatted editing mode (page 4-44).

SC Enters the character editing mode (page 4-47).

K Displays the Key Specification screen (page 4-54) and then enters the formatted editing mode.

KU Displays the Key Specification screen and then enters the unformatted editing mode.

KC Displays the Key Specification screen and then enters the character editing mode.

To retrieve the first segment in an HDAM database, you must enter one of the six valid line commands and, optionally, a key value on either the Data Base Location screen or KEY Specification screen. If a key value is not specified on the Data Base Location screen with line commands S, SU, or SC, File-AID for IMS retrieves the first root segment.

Use the K, KU, or KC line commands when you need greater flexibility to specify key values than the Data Base Location screen allows. By using one of these line commands to proceed to the Key Specification screen before entering an editing mode, you can, for example, enter key values greater then 30 characters in length. The Key Specification screen is described in detail on page 4-54.

To specify the key values in the hierarchical path to a segment occurrence, you can leave any or all of the Key Value fields blank. If you leave the Key Value field blank on the segment type you select, File-AID for IMS formats an unqualified SSA at that level and IMS retrieves the first occurrence of that segment type in the specified hierarchical path.

If you enter a key for the segment type you select but leave the Key Value field blank for one of its parent segment types, File-AID for IMS formats an unqualified SSA at the parent's level and IMS searches through each occurrence of that parent segment type in the specified hierarchical path. The search stops when an occurrence of the segment type you selected is found with a key value that matches the one you entered or when all occurrences of the parent without a key entered are searched. For example, in Figure 4-10 on page 4-21, File-AID for IMS formats the SSAs so that IMS searches through all occurrences of the ORDR020 segment type that exist under the ORDR010 root with a key equal to AA2222, looking for an occurrence of the ORDR030 segment type with a key of 01.

If the correct ORDR030 segment occurrence is found, you then enter the unformatted editing mode with that ORDR030 segment as your current segment.

If the correct ORDR030 segment cannot be found, an error message is displayed on the Data Base Location screen.

If, in the example, both the ORDR010 and ORDR020 Key Value fields are blank when the ORDR030 segment type is selected, File-AID for IMS formats the SSAs so that IMS searches for the first ORDR030 occurrence in the database with a key value of 01. If all three Key Value fields are blank, IMS retrieves the first ORDR030 occurrence in the database.

Figure 4-10. EDIT - Data Base Location Screen - Leaving Key Field Blank

```
File-AID for IMS  ---  EDIT - Data Base Location  ---------------- LINE  00001
COMMAND ===>                                                     SCROLL ===> PAGE

Line                                          Key                Key
Cmd -----Level----- Segment- --Description-Length-------------Value------------
__* 1 DBD-PORDR     ORDR010  ORDER ROOT      006 AA2222
__   2              ORDR020  ORDER LINE      002
SU    3             ORDR030  ORDER STATUS    002 01
__   2              ORDR040  ORDER SCRAP     008
__   2              ORDR050  ORDR-CUST LCHLD 002
                         *** END OF SEGMENT LIST ***









S  -- Select Formatted        K  -- Key Specification, then Select Formatted
SU -- Select Unformatted      KU -- Key Specification, then Select Unformatted
SC -- Select Character        KC -- Key Specification, then Select Character
```

When a segment type is non-keyed, File-AID for IMS formats an unqualified SSA at that level, which results in the same processing as for segment types that you do not enter key values for.

When key values of 13 positions or less in length are specified, you can enter the hexadecimal representation of the key value. The format is X'nnnn...', where each n digit is one half-byte of hex data. You must enter an even number of digits when using this format.

When a key value in character or hexadecimal format is specified and the value you enter is shorter than the length shown in the Key Length column, File-AID for IMS blank pads the key value on the right.

The Data Base Location screen always shows the hierarchical path to the segment occurrence in the database that is the current position with asterisks and key values. The Data Base Location screen saves those key values and displays them each time you return to the screen. Saved key values are updated for each segment in the current hierarchical path each time you return to the Data Base Location screen.

Key values that are not in the current hierarchical path are not updated. Saved key values can be updated by typing over them, whether or not they are in the current hierarchical path. For example, in Figure 4-11 on page 4-22, the hierarchical path to the current segment position includes segment types ORDR010 and ORDR040 with key values of AA2222 and 01C7477A, respectively. Those two key values are displayed each time you return to the Data Base Location screen until different occurrences of the ORDR010 and ORDR040 segment types are part of the current hierarchical path or until you change the key values.

The last time this screen was displayed, ORDR020 and ORDR030 were in the current hierarchical path with key values of 01. The last time that ORDR050 was in the current hierarchical path, it did not show the key value of 01. This value was typed in manually.

The Data Base Location screen saves prior key values to enable you to easily re-position to previously selected segment occurrences.

Figure 4-11. Edit - Data Base Location Screen - Saved Key Values

```
File-AID for IMS  ---  EDIT - Data Base Location  ---------------- LINE  00001
COMMAND ===>                                                  SCROLL ===> PAGE

Line                                        Key                Key
Cmd -----Level----- Segment- --Description-Length------------Value-----------
__* 1 DBD-PORDR     ORDR010  ORDER ROOT      006 AA2222
__   2              ORDR020  ORDER LINE      002 01
__    3             ORDR030  ORDER STATUS    002 01
__*  2              ORDR040  ORDER SCRAP     008 01C7477A
__   2              ORDR050  ORDR-CUST LCHLD 002 01
                         *** END OF SEGMENT LIST ***






S  -- Select Formatted        K  -- Key Specification, then Select Formatted
SU -- Select Unformatted      KU -- Key Specification, then Select Unformatted
SC -- Select Character        KC -- Key Specification, then Select Character
```

Inserting a Segment

The INSERT primary command is the only database update command supported on the Data Base Location screen. With it you can insert new segment occurrences into a database. This command functions on the Data Base Location screen as described in "INSERT (Edit only)" on page 11-27.

Although you can insert any segment type from the Data Base Location screen at any time during your edit session, this screen is primarily intended to be used for inserting the first root segment in an empty, initialized database. You cannot select an editing mode from the Data Base Location screen while in an empty database until you insert a root segment.

The RECOVERY, SAVE, and CAPS commands are three additional primary commands you can use on this screen (RECOVERY and SAVE are not supported in browse mode). Each of these commands is described in "Common Edit Primary Commands" on page 4-25.

Edit Database Location Primary Commands

With Release 7.1, the ZOOM and ZOOMH primary commands can now be used on the Data Base Location screen.

ZOOM

The ZOOM primary command opens a panel that enables you to modify key values of segments that display on the Data Base Location screen. The ZOOM command is available for fields defined as character format with length less than or equal to 600 bytes and containing all displayable characters.

Note: Executing the ZOOM command for key values that exceed 600 bytes or contain non-displayable characters automatically displays the Zoomh Edit panel (Figure 4-13 on page 4-24).

To display the Zoom Edit panel (Figure 4-12 on page 4-23), execute the ZOOM primary command while your cursor is on the key value you wish to zoom in the Data Base Location screen (Figure 4-8 on page 4-18). This panel enables you to edit key values with length exceeding 30 characters.

Figure 4-12. Zoom Edit Panel

```
ZOOM EDIT - PFHAUGO.FISAMP.ORDER ---------------------------- (DBD-PORDR   )-
COMMAND ===>
PARENT:
SEGMENT:   ORDR010

DATA NAME: *** KEY VALUE ***
FORMAT:    C   6  K

AA2222






                          ENTER END COMMAND TO RETURN
```

The following primary commands can be used on the Zoom Edit panel:

CANCEL Restores the key value to what existed before you changed it.

END Terminates the Zoom Edit panel and returns you to the previous Edit Data Base Location screen.

HEX ON Displays the Zoomh Edit panel and shows the key value in three-line vertical HEX format.

RETURN Returns you to the Primary Option menu.

ZOOMH Displays the Zoomh Edit panel and shows the key value in three-line vertical HEX format.

ZOOMH

The ZOOMH primary command opens a panel that enables you to edit segment key values in three-line vertical HEX mode. The ZOOMH command is available for variable length key values containing displayable characters and non-displayable hexadecimal values.

To display the Zoomh Edit panel (Figure 4-13 on page 4-24), execute the ZOOMH primary command on the Data Base Location sceen while your cursor is on the key value you wish to zoom in hexadecimal format. The key value is displayed in a scrollable panel in three-line vertical hexadecimal format, identical to the Edit Unformatted - HEX mode (Figure 4-23 on page 4-44).

The top line of the HEX display represents the character format of the current key value, the middle line represents the upper half-byte of each character in HEX, and the third line represents the lower half-byte of each character in HEX. When a character is not displayable, it is represented by a period (.) on the top line. To change a key value, type over the character or the HEX line. If you type over both the character and HEX lines for the same character, the character type over is ignored.

Figure 4-13. Zoomh Edit Panel

```
ZOOMH EDIT - PFHAUG0.FISAMP.ORDER ---------------------------- (DBD-PORDR   )-
COMMAND ===>                                                  SCROLL ===> PAGE
PARENT:
SEGMENT:   ORDR010

DATA NAME: *** KEY VALUE ***
FORMAT:    C   6  K
      ----+----1----+----2----+----3----+----4----+----5----+----6----+----7

    1 AA2222
      CCFFFF
      112222
      ----+----*----+----*----+----*----+----*----+----*----+----*----+----*


                          ENTER END COMMAND TO RETURN
```

The following primary commands can be used on the Zoomh Edit panel:

CANCEL Restores the key value to what existed before you changed it.

END Terminates the Zoomh Edit panel and returns you to the previous Edit Data Base Location screen.

HEX OFF Displays the Zoom Edit panel and shows the key value in character format.

RETURN Returns you to the Primary Option menu.

ZOOM Displays the Zoom Edit panel and shows the key value in character format.

Note: If you execute the HEX OFF or ZOOM commands for key value fields that exceed 600 bytes and contain non-displayable characters, you will remain on the Zoomh Edit panel and receive an informational message.

Terminating the Screen

If using a dynamic PSB, do one of the following to terminate the Data Base Location screen:

- Enter the END command. The Data Base Specification screen is displayed.
- Enter the RETURN command to return to the Primary Option Menu.

After you enter one of these commands, the processing under the IMS batch region is terminated, which causes the IMS Resource Manager to display message "DFS627I" at your terminal. This message indicates whether the resource cleanup operation initiated by the IMS Resource Manager succeeded or failed. This message can be suppressed by setting your TSO user profile option WTPMSG to NOWTPMSG.

If using a static PSB and you selected only one DBD, follow the same procedure as if using a dynamic PSB to terminate the Data Base Location screen.

If using a static PSB and you selected more than one DBD, do one of the following to terminate the Data Base Location screen:

- Enter END. The DBD Selection List for Static PSB screen is displayed. The screen now includes only the selected entries. Enter S to select the next DBD.
- Enter END to return to the Data Base Specification (Static) screen.
- Enter RETURN to return to the Primary Option Menu.

Common Edit Primary Commands

You can use the following primary commands in any of the three editing modes: Formatted, Unformatted, or Character. Each of these commands operates the same in all three editing modes. Except where noted, each command is also valid in browse mode. Refer to Chapter 11, "Primary Commands" for a detailed explanation of these and other File-AID for IMS/ISPF commands.

CAPS	Sets or changes caps mode.
CHANGE/RCHANGE	Changes one or more occurrences of string-1 to string-2.
CHAR	Switches to character editing mode.
END	Returns to the Data Base Location screen.
FIND/RFIND	Searches for one or more occurrences of a specified string.
FORMAT	Switches to formatted editing mode.
GOH/GOT, GOM	Retrieves the segment at a bookmarked location.
HEX	Displays data in either hexadecimal or character format.
HIERARCHY	Displays the Hierarchy Display screen.
KEY	Displays the Key Specification screen.
MARK	Creates or lists names for database locations.
PARENT	Retrieves the parent of the current segment.
RECOVERY	Forces a DL/I checkpoint call at a specified interval (edit only).
REFRESH	Retrieves the current version of a segment (edit BMP only).
RETURN	Returns to the Primary Option Menu.
ROOT	Retrieves the specified root segment.
SAVE	Forces a DL/I checkpoint call (edit only).
UNFORMAT	Switches to unformatted editing mode.
DBCS[a]	Changes display format to DBCS (Double-Byte Character Set).
EBCDIC[a]	Changes display format to EBCDIC (Single-Byte Character Set).
MIXED[a]	Changes display format to mixture of DBCS and EBCDIC strings.

a. For Double-Byte Character Set (DBCS) support, these primary commands change the display format of data fields to the specified data format. Refer to "Double-Byte Character Support" on page 2-4for a description of File-AID for IMS's DBCS support.

Edit Formatted Mode

The Formatted screen enables you to edit the segment occurrences in a database in formatted mode using segment layouts as masks over the data in a three-line vertical HEX or Character mode. You can switch from one mode to another using the HEX ON/OFF command.

Note: By default, segments are displayed in Character mode.

Formatted Screen - Character Mode

In Character mode, one segment occurrence per screen and one field per line are displayed in the Formatted screen as shown in Figure 4-14.

Figure 4-14. Formatted Screen - Character Mode

```
EDIT - CW.FISAMP.ORDER----------------------------- (DBD-PORDR   )- LINE 00001
COMMAND ===>                                                 SCROLL ===> PAGE
PARENT   ORDR010
SEGMENT  ORDR040   CONCATENATED KEY: AA2222,01C7477A
--------LEVEL NUMBER/DATA-NAME--------- -FORMAT- ---------FIELD VALUE----------
01  SCRAP-DATA
  05  SCRAP-KEY
    07  PROCESS-INDICATOR              C   2  K 01
    07  PART-NUMBER                    C   6  K C7477A
  05  MATERIAL-TYPE-INDICATOR          C   2    RM
  05  SCRAP-QTY                        PS  5  2 2.00
  05  REASON-CODE                      C   2    BS
  05  DESCRIPTION                      C  15    BURNT MATERIAL
  05  REWORK-INDICATOR                 C   1    Y
  05  SCRAP-DATE                       Z   8    19880912
*** END OF LAYOUT. LENGTH =    40 ***




ENTER UNFMT TO SWITCH TO UNFORMATTED MODE, CHAR TO SWITCH TO CHARACTER MODE
```

You can enter this screen from the Data Base Location, Unformatted, Character, or Key Specification screen. The segment occurrence shown on this screen is always the current segment occurrence in the database.

The UP and DOWN primary commands enable you to scroll through the segment layout while staying fixed on the current segment. The database movement commands (CHILD, KEY, NEXT, PARENT, ROOT, and TWIN) enable you to change your current segment position to another segment occurrence in the database. The HIERARCHY command displays your location in the hierarchical structure and provides detailed information about the segment.

The Formatted screen displays five heading lines in Character mode. The top line displays the mode you are in (Browse/Edit), primary DBD name, and line number of the first segment layout line. The second line displays the Command and Scroll fields. The scroll amount in the Scroll field enables UP/DOWN scrolling. The third (Parent), fourth (Segment), and fifth (Screen Body) heading lines are explained below.

Parent

Displays the segment name of the immediate parent of the current segment type. If the current segment type is defined by multiple segment layouts, the current segment's record type values are also shown.

Segment

Displays the segment name of the current segment type and the first 41 characters of the fully concatenated key of the current segment. The key values for each segment type represented in the fully concatenated key are separated by commas.

Screen Body

The screen body consists of the following column headings:

- Level Number/Data-Name
- Format
- Field Value

Level Number/Data-Name

Displays the level number and data-name of each item in the segment layout.

Format

Displays the format of each item (for COBOL, USAGE, and PICTURE information; for PL/I, attribute information). The Format column is blank for group items. For elementary items, it has the following meaning:

COBOL

The first position indicates the field's data type. The values are:

C	alphanumeric (PIC X)
P	packed decimal (PIC 9 COMP-3)
B	binary (PIC 9 COMP)
Z	zoned decimal (PIC 9, USAGE DISPLAY)
G	graphic (PIC G)
COMP-1	COMPUTATIONAL-1 (internal floating point, fullword)
COMP-2	COMPUTATIONAL-2 (internal floating point, doubleword)
INDEX	INDEX data item
PTR	POINTER data item

The second position contains an S for signed numeric fields (P, B, and Z items).

The third portion of the Format column indicates:

- The number of characters in an alphanumeric field (C item).
- The number of integer digits in the PICTURE of a numeric field (P, B, and Z items).
- The number of single Double-Byte Character Set (DBCS) character positions taking up two bytes of storage in a graphic field (G item).

The fourth portion of the Format column indicates the number of decimal digits in the PICTURE of a numeric field (P, B, and Z items). If there are no decimal digits, the fourth portion is blank.

The fifth portion of the Format column contains a K for fields that define the key of the current segment.

PL/I

The first position indicates the field's data type. The values are:

C	alphanumeric (CHAR or PIC X)

P packed decimal (FIXED DECIMAL)

B binary (FIXED BINARY)

Z zoned decimal (PIC 9)

G GRAPHIC

FD decimal floating point (FLOAT DECIMAL)

FB binary floating point (FLOAT BINARY)

BT BIT data item

PTR POINTER data item

The second position contains an S for signed numeric fields (P, B, and Z items).

The third portion of the Format column indicates:

- The number of characters in an alphanumeric field (C item).
- The number of integer digits in a packed or zoned numeric field (P and Z items).
- The number of integer digits in the maximum value a binary field (B item) can hold (5 for FIXED BIN (1) through FIXED BIN (15); 10 for FIXED BIN (16) through FIXED BIN (31)).
- The number of decimal digits in a decimal floating point field (FD item).
- The number of binary digits in a binary floating point field (FB item).
- The number of bits in a bit field (BT item).
- The number of single Double-Byte Character Set (DBCS) character positions taking up two bytes of storage in a graphic field (G item).

The fourth portion of the Format column indicates the number of decimal digits in a packed or zoned numeric field (P and Z items). If there are no decimal digits, the last portion is blank.

The fifth portion of the Format column contains a K for fields that define the key of the current segment.

If you are browsing/editing via a secondary index and the current segment is the source segment for the secondary index, then the fifth portion of the Format column (in COBOL and PL/I) contains an S for all of the secondary index source fields that are not part of the key of the current segment (K fields override S fields).

Field Value

Displays the contents of each elementary item in the current segment. The field is blank and protected for lines with non-elementary items. It is also protected for key fields. If using a static PSB and the PSB does not have replace processing options, the Field Value field is protected. To change the field value, type over the Field Value column.

For alphanumeric fields, the Field Value column shows the character representation of the field with the following exceptions:

a. If the field contains all hexadecimal zeroes (X’0000...’), the word LOW-VALUES is displayed. Conversely, to enter HEX zeroes in an alphanumeric field, enter the word LOW-VALUES.

b. If the field contains all hexadecimal Fs (X’FFFF...’), the word HIGH-VALUES is displayed. Conversely, to enter HEX Fs in an alphanumeric field, enter the word HIGH-VALUES.

c. If the field contains non-displayable characters and is not all HEX zeroes or Fs, the word INVALD is displayed, followed by one of the following:

- The hexadecimal representation of the field for fields 10 characters or less in length in the format - X'nnnn...'. This HEX string can be changed by either typing over it or by erasing the entire field and entering a new HEX string, left-justified in the field.
- The literal -SEG POSITION nnnnn for fields greater than 10 characters in length, where nnnnn represents the starting position of the field in the segment. In this case, you must use the unformatted mode or HEX ON command to view the contents of the field or to enter a HEX string in the field.

Alphanumeric fields longer than 30 positions are split across as many consecutive lines as necessary. If a field longer than 30 bytes contains an invalid character, the message INVALD is displayed on the line that contains that character.

For example, a data element occupies 40 bytes that is split across 2 lines in the Field Value column (30 bytes on the first line and 10 on the second line). If an invalid character exists in this 40-byte field, the message "INVALD" is displayed according to the position of the invalid character as outlined below:

- If the invalid character occurs in positions 1 through 30, the message INVALD is displayed on the first line.
- If the invalid character occurs in positions 31 through 40, the message INVALD is displayed on the second line as shown in Figure 4-15.

In Figure 4-15, the data element ORDER-DESCRIPTION contains an invalid character between positions 31 and 40. The message INVALD is displayed on the second line in the Field Value column occupied by ORDER-DESCRIPTION.

Figure 4-15. Formatted Screen - Invalid Character Beyond Position 30

```
EDIT - CW.FISAMP.ORDER ----------------------------- (DBD-PORDR   )- LINE 00001
COMMAND ===>                                                SCROLL ===> PAGE
PARENT
SEGMENT  ORDR010   CONCATENATED KEY: AA4444
--------LEVEL NUMBER/DATA-NAME--------- -FORMAT- ---------FIELD VALUE----------
01  ORDER-ROOT-DATA
  05  ORDER-ROOT-KEY
    07  ORDER-NUMBER-PREFIX             C   2  K AA
    07  ORDER-NUMBER                    Z   4  K 4444
  05  ORDER-DESCRIPTION                 C  40    HIGH PERFORMANCE COAX
      (POS 31-40)                               INVALD X'40000000404040404040'
  05  CUSTOMER-NUMBER                   C   6    CN0033
  05  PLANNED-ORDER-QUANTITY            PS  5    550
  05  PLANNED-ORDER-AMOUNT              P   5  2 5209.58
  05  ORDER-TYPE                        C   2    HT
  05  ACTUAL-ORDER-QUANTITY             PS  5    51
  05  TOTAL-SCRAP-QUANTITY              PS  5    INVALD X'F04040'
  05  TOTAL-SCRAP-REDEFINES             RDEFINES TOTAL-SCRAP-QUANTITY
                                        C   3    0
  05  ORDER-STATUS                      Z   2    03
  05  FILLER                            C   1
  05  FIRST-ACTIVITY-DATE

ENTER UNFMT TO SWITCH TO UNFORMATTED MODE, CHAR TO SWITCH TO CHARACTER MODE
```

Zoned decimal, packed decimal, and binary fields are converted to external decimal for display and to enable type overs. External decimal consists of a negative sign (for signed fields that contain a negative value), the integer portion of the number, and for fields with decimal positions, a decimal point followed by the decimal portion of the number. When you type over numeric fields, the following rules apply:

- The value can start anywhere in the Field Value column.
- There can be one or more blanks between the negative sign, if any, and the value.
- No spaces can be imbedded in the integer and decimal portions of the value.

- The sign, integer and decimal precision of the value entered are fully validated against the field format.
- Scale positions must be zero in the value entered.
- You can enter a HEX string (for example, x'4141...') in fields 10 characters or less in length.

If a numeric field initially contains an invalid value given its field format, the word INVALD is displayed, followed by one of the following:

- The hexadecimal representation of the field for all binary and packed fields and for all zoned decimal fields 10 bytes or less in length in the format - X'nnnn...'. This HEX string can be changed by either typing over it or by erasing the entire field and entering a new value, left-justified in the field.
- The literal - SEG POSITION nnnnn for zoned decimal fields greater than 10 bytes in length, where nnnnn represents the starting position of the field in the segment. In this case, you must use the unformatted mode or HEX ON command to view the contents of the field or to enter a HEX string in the field.

File-AID for IMS considers numeric fields to be invalid in the following situations:

- A zoned or packed field is not in the zoned or packed format.
- An unsigned field contains a negative value.
- A packed or binary field contains a value too large for the number of digits in its field format.

COBOL File-AID for IMS does not format POINTER and INDEX data items. The Field Value column always shows the hexadecimal representation of these fields in the format X'nnnn...'. This HEX string can be changed by either typing over it or by erasing the entire field and entering a new HEX string. You must enter the field value as a four-byte HEX string (for example, X'41414141'). The HEX string can start anywhere in the Field Value column but cannot contain imbedded spaces.

PL/I File-AID for IMS does not format FLOAT BINARY and POINTER data items. The Field Value column always shows the hexadecimal representation of these fields in the format X'nnnn...'. This HEX string can be changed by either typing over it or by erasing the entire field and entering a new HEX string. For FLOAT BINARY data items that are stored in fullwords of storage and POINTER data items, you must enter the field value as a four-byte hexadecimal string (for example, X'41414141'). For FLOAT BINARY data items that are stored in doublewords of storage, you must enter an eight-byte hexadecimal string (for example, X'4141414141414141'). The HEX string can start anywhere in the Field Value column but cannot contain imbedded spaces.

For BIT data items, the Format column shows the actual bit representation of the field. This bit string can be changed by either typing over it or by erasing the entire field and entering a new bit string, left-justified in the field. The bit string must contain only zeroes and/or ones and cannot contain imbedded spaces.

For BIT data items longer than BIT(16), File-AID for IMS displays the BIT data item in bit strings of lengths up to BIT(16) per screen line. Each bit string's data-name is suffixed with the starting position of the first bit in this string.

Note: If you are editing a segment that has multiple record types and you change the record type value fields on the current segment, the new record type values are not reflected in heading line three nor is the new segment layout, if any, used until you move to another segment occurrence and then return to the original segment.

COBOL File-AID for IMS displays items that contain REDEFINES and/or OCCURS clauses in a special manner. For items that contain the REDEFINES clause, the level number and data-name are shown in the normal manner, the word REDEFINES is shown in the Format column, and the data-name of the redefined item is shown in the Field Value column. For elementary items, the field format and value are shown on the next line. Type overs are processed from top to bottom. If both the redefined and redefining items are typed over, the redefining item is processed last and overlays the value in the redefined item.

Items that contain an OCCURS clause are displayed with two heading lines followed by each occurrence of the field with the occurrence number in parentheses. The first heading line shows the level number and data-name in the normal manner. The Format and Field Value columns are blank unless the DEPENDING ON option is present and the object of the DEPENDING ON is invalid. In this case, a message is displayed that indicates the problem with the object of the DEPENDING ON. The second heading line shows the number of occurrences, in the Level Number/Data-Name column and the data-name of the object of the DEPENDING ON, if any, in the Field Value column.

When an OCCURS clause has the DEPENDING ON option specified, you can dynamically control the number of times the item occurs by typing over the value of the object of the DEPENDING ON. The value of the object of the DEPENDING ON can range from the minimum to the maximum number of occurrences specified in the OCCURS clause. This enables you to easily expand and contract a variable-length segment. When you increase the value of the DEPENDING ON object, the new occurrences are initialized to blanks and zeroes based on the segment layout.

PL/I File-AID for IMS displays array items in a special manner. For each array, two heading lines are displayed followed by each occurrence of the field with the occurrence number in parentheses. The first heading line shows the level number and data-name in the normal manner. The Format and Field Value columns are blank. The second heading line shows the number of occurrences as specified by the array's dimension attribute in the Level Number/Data-Name column.

Varying length character items are displayed with two lines. The first line shows the length of the data value. The second line shows the data value. The level number and data-name on both lines are the same with the exception that on the first line, .LENGTH is appended to the data-name to differentiate the length value from the data value. The length value is displayed as a two-byte binary field, and the data value is displayed with a length equal to the maximum length declared for the item. File-AID for IMS does not automatically recognize expansion and contraction of the data value. If you type over the data value and increase or decrease the length of the data, you must also type over the length value with the new length before you save the data.

Following the last line of the segment layout, an end of layout message that indicates the length in bytes of the segment layout is displayed in the Level Number/Data-Name column. If the segment layout length and current segment length are unequal, a message indicating the difference is displayed in the Field Value column. If the segment layout is shorter than the segment, the portion of the segment beyond the segment layout is not displayed nor modifiable in Edit Formatted. If the segment layout is longer than the segment, the fields extending

beyond the segment have the message FIELD EXTENDS BEYOND CURR SEG displayed in the Field Value column and cannot be typed over.[1] If a portion of a field does not exceed the segment length, it can viewed by executing the HEX ON command.

Formatted Screen - Hex Mode

In three-line vertical HEX mode, one segment occurrence per screen and one field per set of three lines are displayed in the Formatted screen as shown in Figure 4-16.

Figure 4-16. Formatted Screen - Hex Mode

```
EDIT - PFHAUGO.FISAMP.ORDER ------------------------ (DBD-PORDR   )- LINE 00001
COMMAND ===>                                                SCROLL ===> PAGE
PARENT:  ORDR010
SEGMENT: ORDR040   CONCATENATED KEY: AA2222,01C7477A
                                     CCFFFF6FFCFFFFC
                                     112222B01374771
--------LEVEL NUMBER/DATA-NAME--------- -FORMAT- ---------FIELD VALUE----------
01  SCRAP-DATA


  05  SCRAP-KEY


    07  PROCESS-INDICATOR              C   2  K 01
                                                FF
                                                01
    07  PART-NUMBER                    C   6  K C7477A
                                                CFFFFC
                                                374771
  05  MATERIAL-TYPE-INDICATOR          C   2    RM
                                                DD
                                                94

  ENTER UNFMT TO SWITCH TO UNFORMATTED MODE, CHAR TO SWITCH TO CHARACTER MODE
```

The Formatted screen displays seven heading lines in three-line vertical HEX mode. The first four heading lines are identical to the Formatted Screen - Character mode. See page 4-26 for more information.

The fifth and sixth lines display the first 41 characters of the concatenated key with the upper and lower half-bytes of each character in HEX.

The seventh heading line, screen body consists of the following column headings:

- Level Number/Data-Name
- Format
- Field Value

The screen body displays the current segment in three-line vertical HEX mode. The top line of the HEX display represents the character format of the field value, the middle line represents the upper half-byte of each character in HEX, and the third line represents the lower half-byte of each character in HEX. To change segment contents, you can type over the character or HEX line. If you type over both the character and HEX lines for the same character, the character type over is ignored.

Level Number/Data-Name

The Level Number/Data-Name column displays the level number and data-name of each item in the segment layout.

1. For Double-Byte Character Set (DBCS) support, the display of the field values and record type values for multi-record type files are based on the data format mode (DBCS, MIXED, or EBCDIC). Refer to "Double-Byte Character Support" on page 2-4 for a description of File-AID for IMS's DBCS support.

Format

The Format column displays the format of each item (for COBOL, USAGE, and PICTURE information; for PL/I, attribute information). The COBOL and PL/I format information in the Formatted Screen - HEX mode is identical to the information that displays in Character mode. See “Format” on page 4-27 for more information.

Field Value

The Field Value column displays the value of each elementary item in the current segment. The field is blank and protected for lines with non-elementary items. It is also protected for key fields. To change the field value, type over the Field Value column.

In HEX mode, the field value shows actual internal data representation. Fields marked INVALD remain highlighted for the three-line display.

See “Field Value” on page 4-28 for more information on alphanumeric and numeric field value display.

Excluding Lines

When you want to view or change only certain fields in the segment layout but all the fields do not fit on one screen, you can exclude one or more fields from the screen. Excluding lines does not affect the current segment or segment layout in any way; it only affects what is displayed on the Formatted screen.

Excluding lines is a two-step process. You must first enter the EXCLUDE primary command to unprotect the Level Number/Data-Name column.

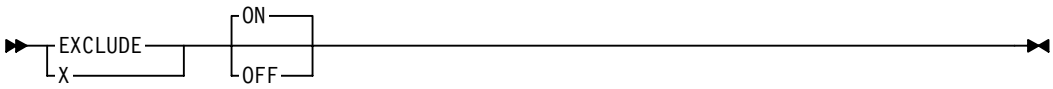

EXCLUDE ON causes the Level Number/Data-Name column to be unprotected, and EXCLUDE OFF causes it to be protected. If you omit the operand, ON is assumed.

Next, enter the X line command left-justified in the Level Number/Data-Name column.

X command syntax

```
X    Exclude one line
Xn   Exclude n lines
XX   Exclude a block of lines
```

The number *n* can range from 1 to 99999. To exclude a block of lines, enter XX on the first and last lines of the block to be excluded. The first and last lines of the block need not be on the same screen. You can enter only one pair of block commands per interaction.

Excluded lines are replaced by dashes (-) in the Level Number/Data-Name column. A message in the Field Value column indicates the number of lines and number of bytes excluded. File-AID for IMS remembers excluded lines as you scroll through a database. You do not need to re-exclude lines each time you scroll to a different segment. To re-display excluded lines, enter the RESET primary command.

After excluding lines, you can enter the EXCLUDE OFF command to re-protect the Level Number/Data-Name column without affecting excluded lines. Figure 4-17 and Figure 4-18 show a before and after example of excluding lines.

Figure 4-17. Excluding Lines - Before

```
EDIT - CW.FISAMP.ORDER ---------------------------- (DBD-PORDR   )- LINE 00001
COMMAND ===>                                                  SCROLL ===> PAGE
PARENT   ORDR010              RCD TYP1: PO
SEGMENT  ORDR020   CONCATENATED KEY: AA2222,01
--------LEVEL NUMBER/DATA-NAME--------- -FORMAT- ---------FIELD VALUE----------
01  ORDER-LINE-DATA-PO
  05  SEGMENT-LENGTH                    BS  4    178
  05  ORDER-LINE-KEY
    07  LINE-NUMBER                     C   2  K 01
X205  ORDER-TYPE                        C   2    PO
  05  LINE-STATUS                       C   7    OPEN
  05  PART-NO                           C   6    C7477A
  05  DESCRIPTION                       C  30    BLACK COAXIAL CABLE
  05  UNIT-OF-MEASURE                   C   2    EA
  05  PURCHASE-ORDER-INFO
    07  PO-CODE                         C   4    WXWW
    07  PO-NUMBER                       C  12    AA2222-22
XX  07  PO-COMPANY                      C  30    ZENITH WIRE
    07  PO-VENDOR-NUMBER                C   5    2224
XX  07  PO-VENDOR-CODE                  C   5    34552
  05  FILLER                            C  30
  05  ORDER-QUANTITIES

ENTER UNFMT TO SWITCH TO UNFORMATTED MODE, CHAR TO SWITCH TO CHARACTER MODE
```

Figure 4-18. Excluding Lines - After

```
EDIT - CW.FISAMP.ORDER ---------------------------- (DBD-PORDR   )- LINE 00001
COMMAND ===>                                                  SCROLL ===> PAGE
PARENT   ORDR010              RCD TYP1: PO
SEGMENT  ORDR020   CONCATENATED KEY: AA2222,01
--------LEVEL NUMBER/DATA-NAME--------- -FORMAT- ---------FIELD VALUE----------
01  ORDER-LINE-DATA-PO
  05  SEGMENT-LENGTH                    BS  4    178
  05  ORDER-LINE-KEY
    07  LINE-NUMBER                     C   2  K 01
-  -  -  -  -  -  -  -  -  -  -  -  -            2 LINES/9 BYTES NOT DISPLD
  05  PART-NO                           C   6    C7477A
  05  DESCRIPTION                       C  30    BLACK COAXIAL CABLE
  05  UNIT-OF-MEASURE                   C   2    EA
  05  PURCHASE-ORDER-INFO
    07  PO-CODE                         C   4    WXWW
    07  PO-NUMBER                       C  12    AA2222-22
-  -  -  -  -  -  -  -  -  -  -  -            3 LINES/40 BYTES NOT DISPLD
  05  FILLER                            C  30
  05  ORDER-QUANTITIES
    07  QTY-ORDERED                     PS  5    12
    07  QTY-BACKORDERED                 PS  5    1
    07  QTY-SHIPPED                     PS  5    10

ENTER UNFMT TO SWITCH TO UNFORMATTED MODE, CHAR TO SWITCH TO CHARACTER MODE
```

Edit Formatted Primary Commands

All the primary commands described on page 4-25 can be used when editing in formatted mode. In addition, the FPRINT and INSERT commands can also be used in this mode. Refer to Chapter 11, “Primary Commands” for more information on these commands. You can execute the EXCLUDE and RESET primary commands described in “Excluding Lines” on page 4-34.

Besides the commands mentioned above, you can use the GOB, GOF, GOH/GOT, GOL, GOM, HEX, MARK, ZOOM, and ZOOMH primary commands in the Edit Formatted mode.

Note: Special care must be taken when executing the GOB, GOF, GOH/GOT, GOL, or GOM commands with databases that contain nonkeyed or nonunique segments. Refer to “Nonkeyed and Nonunique Segments” on page 4-82 for additional information.

Following is a description of these commands.

GOB

The GOB primary command enables you to scroll through database locations that have been displayed in the Edit Formatted mode.

An integer scroll amount or the MAX operand can be specified after the GOB command. File-AID for IMS will scroll backwards through previously displayed database locations by the specified scroll amount. Specifying the MAX operand will reposition the display to the first location displayed in the Edit Formatted mode.

Executing the GOB MAX command is equivalent to executing the GOH/GOT commands.

GOF

The GOF primary command enables you to scroll forward through database locations that have been displayed in the Edit Formatted mode.

An integer scroll amount or the MAX operand can be specified after the GOF command. File-AID for IMS will scroll forward in the database by the specified scroll amount. Specifying the MAX operand will position you at the most recent database location displayed in the Edit Formatted mode.

Executing the GOF MAX command is equivalent to executing the GOL command.

GOH/GOT

The GOH/GOT primary commands reposition the display to the first segment that was displayed when you entered the Edit Formatted mode.

Executing the GOH/GOT commands is equivalent to executing the GOB MAX command.

GOL

The GOL primary command repositions the display to the most recent segment displayed in the Edit Formatted mode.

Executing the GOL command is equivalent to executing the GOF MAX command.

GOM

The GOM primary command enables you to change the database location displayed in the Edit Formatted mode.

The GOM command must be followed by the **bookmark-name** operand. The **bookmark-name** operand must be the name of an existing bookmark that has been created using the MARK command.

Executing the GOM bookmark-name command sets the current database location to the segment associated with the bookmark.

Bookmark Options Screen

When executing the GOM command, it may happen that IMS is unable to retrieve the segment that has a bookmark associated with it. The Bookmark Options screen (Figure 4-19 on page 4-37) displays in this situation.

Figure 4-19. Bookmark Options Screen

```
MARK ------------------- File-AID for IMS - Bookmark Options -----------------
COMMAND ===>

The bookmarked location is no longer available.
Use:

   END to return to the Bookmark screen
   DELETE to delete bookmark
   KEY for the Key Specification screen

Note that the KEY command will preserve the key values associated
with the deleted segment.  This will allow you to use the
relational operators on the Key Specification panel to establish
a new position close to the deleted segment.
```

The following commands can be used on this screen:

- END will return you to the Bookmark screen and enable you to select a different bookmark (if one is available).
- DELETE will delete the bookmark.
- KEY will navigate you to the Key Specification screen using the concatenated key values associated with the deleted bookmark.

Note: Key values associated with deleted segments can be used for additional navigation.

HEX

The HEX primary command causes the concatenated key, record type values, and field values in the Edit Formatted screen to be displayed in either Hexadecimal or Character mode. Refer to Chapter 11, “Primary Commands” for more information on the HEX command.

MARK

The MARK primary command enables you to name a database location for future reference. Names created by the MARK command can be used with the GOM command to change database location while in Browse/Edit.

The MARK command can be followed by the **bookmark-name** operand. If the **bookmark-name** operand is used with the MARK command, a bookmark with the same name as the **bookmark-name** operand will be created. If you do not use the **bookmark-name** operand, the Bookmark screen will be displayed. Refer to “Bookmark Screen” on page 4-38 for more information on this screen.

The **bookmark-name** operand can be up to eight characters in length and contain displayable characters.

Note: Alphabetic characters in the **bookmark-name** operand are converted to upper case.

Notes on MARK Command

- An existing bookmark name cannot be used to mark multiple database locations.
- The same database location can be referenced by multiple bookmarks.
- The MARK command requires an established database location. If you are positioned beyond twins or at the end of the database, the MARK command will not create a bookmark.

Bookmark Screen

Bookmarks are names that can be given to database locations that enable you to reposition to these locations while in Browse/Edit.

The Bookmark Screen (Figure 4-20) displays after executing the MARK command without the **bookmark-name** operand. This screen enables you to create, select, and manage bookmarks. The bookmark name (once created), segment name, and concatenated key associated with each bookmarked location display in the Bookmark screen.

Figure 4-20. Bookmark Screen

```
MARK ----------------------- File-AID for IMS - Bookmark ----------------------
COMMAND ===>                                                 SCROLL ===> PAGE
END Returns to EDIT/BROWSE   SORT Toggles Sort Sequence: HIST

CMD NAME     SEGMENT  CONCATENATED KEY
--  -------- -------- ---------------------------------------------------------
    ________ ORDR020  AA444404
    A        ORDR010  AA2222
    B        ORDR010  AA4444
    C        ORDR020  AA444401
    D        ORDR020  AA444402









S  -- Select Formatted        K  -- Key Specification, then Select Formatted
SU -- Select Unformatted      KU -- Key Specification, then Select Unformatted
SC -- Select Character        KC -- Key Specification, then Select Character
D  -- Delete Bookmark         R  -- Rename Bookmark
```

The Bookmark screen displays three heading lines. The top line displays the screen name. The second line displays the Command and Scroll amount fields. The scroll amount in the Scroll field enables up/down and left/right scrolling. Refer to “Scrolling” on page 1-13 for more information on scrolling.

The third line, screen body consists of the following column headings:

- Cmd
- Name
- Segment
- Concatenated Key

Cmd

Line commands can be entered in the two-position Cmd column next to the appropriate bookmark name.

Name

Displays the bookmark name.

Segment

Displays segment name associated with the bookmark.

Concatenated Key

Displays the concatenated key of the segment associated with the bookmark.

The first line of each Bookmark screen display is associated with the current database location. Use this line to create a bookmark for this location. To create a bookmark, specify a bookmark name in the Name column and press Enter. The bookmark now displays in the Bookmark screen.

Notes:

- The database location will not be marked, if you leave the Name column blank.
- You will be prompted to enter a new name if you try to create an existing bookmark name.
- Bookmarks created in Browse/Edit remain in effect for the current session.
- Since there is a limit to the number of bookmarks that can be created, you may need to delete bookmark(s) before adding new ones. See the "Delete Line Command" on page 4-40 for information on deleting bookmarks.

Bookmark Screen Primary Commands

The following primary commands can be used on the Bookmark screen:

UP, DOWN Scrolls up and down the bookmarks list.

LEFT, RIGHT Causes scrolling towards left and right margins, enabling you to view portions of concatenated keys that have exceeded available screen space.

Note: The display remains unaffected, if the entire concatenated key fits on a single screen.

LOCATE Scrolls directly to the specified bookmark in the bookmarks list.

Use of the LOCATE command depends on the bookmark sort order. If bookmarks are sorted by name, they can be located by name. If they are sorted in the order in which they were created, they can be located by line number.

Note: Depending on the sort order, the bookmark name or line number must be specified when executing the LOCATE command.

SELECT Enables you to select desired bookmark and displays the segment associated with it.

Note: A bookmark name must be specified when executing the SELECT command.

SORT Sorts bookmarks by name or in the order in which they were created. The SORT command toggles the display between bookmark name and order sort.

Sort sequence is indicated by the literal string NAME (bookmark name) or HIST (history/order of bookmark creation).

Note: By default, bookmarks display in the order in which they were created.

Bookmark Screen Line Commands

Line commands in the Bookmark screen enable you to select bookmarked locations for Formatted, Unformatted, and Character mode processing, change your current database position, and rename and delete bookmarks.

The following line commands can be executed from the Bookmark screen.

Select Line Commands

The Select line commands, S, SU, and SC enable you to change database location to that associated with the selected bookmark.

S Displays segment associated with the selected bookmark in Formatted mode.

SU Displays segment associated with the selected bookmark in Unformatted mode.

SC Displays segment associated with the selected bookmark in Character mode.

Note: The Bookmark Options screen is displayed, if the selected database location is unavailable or has been deleted. See "Bookmark Options Screen" on page 4-36 for more information on this screen.

Key Line Commands

The K line commands, K, KU, and KC enable you to change database location by displaying the Key Specification screen using the concatenated key associated with the selected bookmark.

K Displays the Key Specification screen where you can specify key values for any of the displayed key field values. This will change your position in the database from the current segment position to a new segment position. Upon successful execution of the Key Specification screen the new segment will be displayed in Formatted mode.

KU Displays the Key Specification screen where you can specify key values for any of the displayed key field values. This will change your position in the database from the current segment position to a new segment position. Upon successful execution of the Key Specification screen the new segment will be displayed in Unformatted mode.

KC Displays the Key Specification screen where you can specify key values for any of the displayed key field values. This will change your position in the database from the current segment position to a new segment position. Upon successful execution of the Key Specification screen the new segment will be displayed in Character mode.

Delete Line Command

The D line command is used to delete a bookmark. More than one bookmark can be deleted at the same time.

Rename Line Command

The R line command enables you to rename a bookmark. To rename a bookmark, enter the R line command next to the bookmark you wish to rename. Type over the existing bookmark name with the desired name and press Enter. The renamed bookmark now displays in the Name column.

Note: You will be prompted to enter a new name, if you try to rename an existing bookmark.

ZOOM

The ZOOM primary command enables you to view the entire concatenated key and record type values. In addition, you can also edit field values within a segment occurrence based on the specified layout. The ZOOM command is available for fields defined as character format with length less than or equal to 600 bytes and containing all displayable characters.

Note: Executing the ZOOM command for fields that exceed 600 bytes or contain non-displayable characters automatically displays the Zoomh panel (Figure 4-22 on page 4-42).

To display the Zoom Edit panel (Figure 4-21), execute the ZOOM primary command while your cursor is on the concatenated key, record type or field value you wish to zoom in the Edit Formatted screen.

The Zoom Edit panel enables you to enter or edit single field values with length exceeding 30 characters. The concatenated key and record type values are display only and cannot be modified.

Figure 4-21. Zoom Edit Panel

```
ZOOM EDIT - PFHAUG0.FISAMP.ORDER ---------------------------- (DBD-PORDR   )-
COMMAND ===>
PARENT:    ORDR010
SEGMENT:   ORDR040

DATA NAME: *** CONCATENATED KEY ***
FORMAT:    C  15  K

AA2222,01C7477A





                         ENTER END COMMAND TO RETURN
```

The following primary commands can be used on the Zoom Edit panel:

CANCEL Restores the contents of the current field to those that existed before you changed it.

END Terminates the Zoom Edit panel and returns you to the previous Edit Formatted screen.

HEX ON Displays the Zoomh Edit panel and shows the field value in three-line vertical HEX format.

RETURN Saves any changes made and returns you to the Primary Option menu.

ZOOMH Displays the Zoomh Edit panel and shows the field value in three-line vertical HEX format.

ZOOMH

The ZOOMH primary command enables you to view the entire concatenated key and record type values. In addition, you can also edit field values within a segment occurrence based on the specified layout. The ZOOMH command is available for variable length fields containing displayable and non-displayable hexadecimal values.

To display the Zoomh Edit panel (Figure 4-22), execute the ZOOMH primary command while your cursor is on the concatenated key, record type or field value. A single field value is displayed in a scrollable panel in three-line vertical hexadecimal format, identical to the Edit Unformatted screen (Figure 4-23 on page 4-44). The concatenated key and record type values are display only and cannot be changed.

Figure 4-22. Zoomh Edit Panel

```
ZOOMH EDIT - PFHAUG0.FISAMP.ORDER ---------------------------- (DBD-PORDR   )-
COMMAND ===>                                                  SCROLL ===> PAGE
PARENT:    ORDR010
SEGMENT:   ORDR040

DATA NAME: *** CONCATENATED KEY ***
FORMAT:    C  15  K
      ----+----1----+----2----+----3----+----4----+----5----+----6----+----7

    1 AA2222,01C7477A
      CCFFFF6FFCFFFFC
      112222B01374771
      ----+----*----+----*----+----*----+----*----+----*----+----*----+----*



                          ENTER END COMMAND TO RETURN
```

The following primary commands can be used on the Zoomh Edit panel:

CANCEL Restores the contents of the current field to those that existed before you changed it.

END Terminates the Zoomh Edit panel and returns you to the previous Edit Formatted screen.

HEX OFF Displays the Zoom Edit panel and shows the field value in character format.

RETURN Saves any changes made and returns you to the Primary Option menu.

ZOOM Displays the Zoom Edit panel and shows the field value in character format.

Note: If you execute the HEX OFF or ZOOM commands for fields that exceed 600 bytes and contain non-displayable characters, you will remain on the Zoomh Edit panel and receive an informational message.

Notes on Formatted Mode

In Formatted mode, there are several situations in which the body of the screen may be cleared and a message displayed to indicate the reason. Following are some common instances when this would happen:

- When you are positioned at the top or bottom of a database.
- When you position yourself on a segment type that has not been defined in the segment/layout cross-reference dataset.
- When you position yourself on a multiple record type segment that contains record type values not defined in the segment/layout cross-reference data set.
- When the segment layout specified in the segment/layout XREF for the current segment is not found in the specified segment layout library.
- When the segment layout for the current segment has syntax errors.
- When you are positioned beyond the last twin occurrence of a child segment type under the current parent.
- When you specify N for the Use Layouts field on the Data Base Specification screen and enter the Formatted Editing mode. [1]

Edit Unformatted Mode

The Unformatted screen enables you to edit segment occurrences in a database in three-line vertical HEX or Character mode. You can switch from one mode to another using the HEX ON/OFF command.

Note: By default, segments are displayed in HEX mode.

Unformatted Screen - Hex Mode

In HEX mode, one segment occurrence per screen and 70 positions per line (or set of three lines) are displayed on this screen as shown in Figure 4-23 on page 4-44.

1. When DBCS characters are entered in Edit Formatted mode in a field that is defined as a character field (PIC X for COBOL or CHAR for PL/I) and extends beyond 30 characters, shift-out/shift-in (SO/SI) characters are inserted in the beginning and ending positions of each 30-byte portion of the field. These shift characters are saved in the record when it is rewritten to the file.

This is the method ISPF uses to handle fields that contain MIXED (single- and double-byte) data. To avoid the insertion of shift characters, edit the data in the Unformatted or Character edit sub-options.

Figure 4-23. Unformatted Screen - Hex Mode

```
EDIT --- CW.FISAMP.ORDER------------------------------------- (DBD-PORDR   )-
COMMAND ===>                                                 SCROLL ===> PAGE
PARENT   ORDR010              RCD TYP1: PO
SEGMENT  ORDR020   CONCATENATED KEY: AA2222,01
SEG LENGTH ===> 178   MIN:50   MAX:200
      ----+----1----+----2----+----3----+----4----+----5----+----6----+----7

    1 ..01POOPEN   C7477ABLACK COAXIAL CABLE           EAWXWWAA2222-22   ZEN
      0BFFDDDDCD444CFFFFCCDCCD4CDCECCD4CCCDC44444444444CCEEEECCFFFF6FF444ECD
      020176675500037477123132036179130312350000000000051676611222202200095 5
      ----+----*----+----*----+----*----+----*----+----*----+----*----+----*
   71 ITH WIRE                     2224 34552                            ...
      CEC4ECDC4444444444444444444FFFF4FFFFF4444444444444444444444444444444002
      938069950000000000000000000222403455200000000000000000000000000000001C
      ----+----*----+----*----+----*----+----*----+----*----+----*----+----*
  141 ..................ASTC1988090119880904
      0010000008000000008CEECFFFFFFFFFFFFFFFF
      00C01C009C000C009C12331988090119880904




ENTER FMT TO SWITCH TO FORMATTED MODE, CHAR TO SWITCH TO CHARACTER MODE
```

You can enter this screen from the Data Base Location, Formatted, Character, or Key Specification screen.

The segment occurrence shown on the Unformatted screen is always the current segment occurrence in the database. The UP and DOWN primary commands enable you to scroll through the contents of the current segment. The database movement commands (CHILD, KEY, NEXT, PARENT, ROOT, and TWIN) enable you to change your current segment position to another segment occurrence in the database.

Parent

Displays the segment name of the immediate parent of the current segment type. If the current segment type has multiple record type values and you entered Y in the Use Layouts field on the Data Base Specification screen, those record type values are also shown.

Segment

Displays the segment name of the current segment type and the first 41 characters of the fully concatenated key of the current segment. The key values for each segment type represented in the fully concatenated key are separated by commas.

Seg Length

Displays the length of the current segment.

For variable length segments, both the minimum and maximum defined lengths are shown. If the current segment length is less than the minimum defined length, IMS has determined the minimum length to include all required fields for the segment. This may not match the minimum defined length in the DBD.

The screen body displays the current segment in three-line vertical HEX mode.

Multiple sets of display lines are separated by an intensified column marker line. Also, the number of the first position in each set of display lines is shown in the left margin of the screen.

The top line of the HEX display represents the character format of the current segment, the middle line represents the upper half-byte of each character in HEX, and the third line represents the lower half-byte of each character in HEX. When a character is not displayable, it is represented by a period (.) on the top line. To change segment contents,

you can type over the character or the HEX line. If you type over both the character and HEX lines for the same character, the character type over is ignored.

In File-AID for IMS, nulls mode is set to ISPF's default of NULLS ON STD. Because type overs within trailing blanks are replaced with null characters on the Edit Hexadecimal screen, positional data may need to be padded with spaces. Refer to the NULLS - Control Null Spaces section in Chapter 10 of the *ISPF/PDF Edit and Edit Macros Manual* for more information.

If using a static PSB and the PSB does not have the replace processing option, the segment is protected.

Unformatted Screen - Character Mode

In Character mode, only the character representation of the segment is displayed as shown in Figure 4-24.[1] As in HEX mode, when a character is not displayable, it is represented by a period. To change segment contents, type over the character representation.

Figure 4-24. Unformatted Screen - Character Mode

```
EDIT --- CW.FISAMP.ORDER ------------------------------------- (DBD-PORDR   )-
COMMAND ===>                                                  SCROLL ===> PAGE
PARENT   ORDR010              RCD TYP1: PO
SEGMENT  ORDR020   CONCATENATED KEY: AA2222,01
SEG LENGTH ===> 178   MIN:50   MAX:200
      ----+----1----+----2----+----3----+----4----+----5----+----6----+----7

    1 ..01POOPEN   C7477ABLACK COAXIAL CABLE           EAWXWWAA2222-22   ZEN
      ----+----*----+----*----+----*----+----*----+----*----+----*----+----*
   71 ITH WIRE                   2224 34552                              ...
      ----+----*----+----*----+----*----+----*----+----*----+----*----+----*
  141 ..................ASTC1988090119880904






ENTER FMT TO SWITCH TO FORMATTED MODE, CHAR TO SWITCH TO CHARACTER MODE
```

Edit Unformatted Primary Commands

All of the primary commands described on page 4-25 can be used when editing in unformatted mode. In addition, the HEX and INSERT commands can also be used in this mode. Refer to Chapter 11, "Primary Commands" for more information on these commands.

Besides the commands mentioned above, you can execute the GOB, GOF, GOH/GOT, GOL, GOM, MARK, ZOOM, and ZOOMH primary commands in the Edit Unformatted mode. Following is a description of these commands.

GOB, GOF, GOH/GOT, GOL, GOM

The operands and execution of the GOB, GOF, GOH/GOT, GOL, and GOM primary commands in the Edit Unformatted mode are identical to those in the Edit Formatted mode. Refer to page 4-36 for more information.

1. For Double-Byte Character Set (DBCS) support, each display line and record type values for multi-record type files are based on the data format mode (DBCS, MIXED, or EBCDIC). Refer to "Double-Byte Character Support" on page 2-4 for a description of File-AID for IMS's DBCS support.

Note: Special care must be taken when executing the GOB, GOF, GOH/GOT, GOL, or GOM commands with databases that contain nonkeyed or nonunique segments. Refer to "Nonkeyed and Nonunique Segments" on page 4-82 for additional information.

MARK

The MARK primary command enables you to name a database location for future reference. The execution of the MARK command in the Edit Unformatted mode is identical to that in the Edit Formatted mode. Refer to page 4-37 for more information.

ZOOM

The ZOOM primary command enables you to view the entire concatenated key and record type values.

The limitations and execution of the ZOOM command and the display of Zoom Edit panel (after execution of the command) in the Edit Unformatted mode are identical to those in the Edit Formatted mode. Refer to page 4-41 for more information.

The following primary commands can be used on the Zoom Edit panel:

END Terminates the Zoom Edit panel and returns you to the previous Edit Unformatted screen.

HEX ON Displays the Zoomh Edit panel and shows the concatenated key and record type values in three-line vertical HEX format.

RETURN Returns you to the Primary Option menu.

ZOOMH Displays the Zoomh Edit panel and shows the concatenated key and record type values in three-line vertical HEX format.

ZOOMH

The ZOOMH primary command enables you to view the entire concatenated key and record type values in a scrollable panel in three-line vertical hexadecimal format.

The limitations and execution of the ZOOMH command and the display of Zoomh Edit panel (after execution of the command) in the Edit Unformatted mode are identical to those in the Edit Formatted mode. Refer to page 4-42 for more information.

The following primary commands can be used on the Zoomh Edit panel:

END Terminates the Zoomh Edit panel and returns you to the previous Edit Unformatted screen.

HEX OFF Displays the Zoom Edit panel and shows the concatenated key and record type values in character format.

RETURN Returns you to the Primary Option menu.

ZOOM Displays the Zoom Edit panel and shows the concatenated key and record type values in character format.

Edit Character Mode

The Character screen provides an index of the segments in a database. This screen displays one segment occurrence per line in a three-line vertical HEX or Character mode. You can switch from one mode to another using the HEX ON/OFF command.

Note: By default, segments are displayed in Character mode.

Character Screen - Character Mode

In Character mode, one segment occurrence per line is displayed in the Character screen as shown in Figure 4-25.

Figure 4-25. Character Screen - Character Mode

```
EDIT --- CW.FISAMP.ORDER--------------------- (DBD-PORDR   )  COLS 00001 00060
COMMAND ===>                                                   SCROLL ===> CUR
   LEVEL  SEGMENT  ----+----1----+----2----+----3----+----4----+----5----+----6
__ 1      ORDR010  AA9999MEDIUM GRADE COAX                      CN0001.....0.W
__  2     ORDR020  ..01POOPEN   C7777SXTRA SHORT COAX              EAWXWXBB555
__   3    ORDR030  01QS.. ... .OKPRESSING       1988061419880706
__   3    ORDR030  04PO........OKCUTTING        1988071619880801
__   3    ORDR030  05LY........NGFINISHING             19880912
__  2     ORDR020  ..02WOCLOSED CC3465CEMENTING                     ININWO90343
__  2     ORDR020  .Y03SCCLOSED U224AB2400 BAUD MODEM KIT           EASC-AA9999
__ 1      ORDR010  CC1111COAXIAL CABLE - BULK                   CN0099.......G
__  2     ORDR020  ..01POCLOSED C74777WHITE COAX                    EAWW  PO-C1
__   3    ORDR030  01QA.. ... .OKMILLING CMPLTE 1988021419880306
__  2     ORDR020  .>02WOOPEN   X123EWDIODE                         OVEA12230RO
__  2     ORDR020  ..04WOOPEN   P234-2                              INLBW222-2
__  2     ORDR040  01P321-5  ....                19881002
__  2     ORDR050  CN00990101............                  0......
__  2     ORDR050  CN00990202............                  0......
__ 1      ORDR010  CC6666CIRCUIT   BOARDS                       CN0001.....0..
__  2     ORDR020  ..01POOPEN   C12222BLUE COAX                    EAWXWXBB555
__   3    ORDR030  01QS.. ... .OKPRESSING       1988061419880706
__   3    ORDR030  04PO........OKCUTTING        1988071619880801
ENTER FMT TO SWITCH TO FORMATTED MODE, UNFMT TO SWITCH TO UNFORMATTED MODE
```

You can enter this screen from the Data Base Location, Formatted, Unformatted, or Key Specification screen.

The first segment occurrence shown in the Character screen's body is always the current segment occurrence in the database. The second through last lines contain those segments that hierarchically follow the current segment in the database. The UP MAX, DOWN, KEY, PARENT, and ROOT primary commands enable you to change your current segment position to another segment occurrence in the database. The LEFT and RIGHT primary commands enable you to scroll through the contents of the segments displayed in the screen body. The HIERARCHY command gives you a graphical display of the database and provides detailed information on the segments and logical relationships.

A high intensity BOTTOM OF DATA BASE line is displayed after the last segment occurrence in the database.

Level

Displays the hierarchical level number for each segment on the screen.

Segment

Displays the segment name for each item.

The remainder of the screen body shows up to 60 characters of each segment displayed on the screen. You can use left and right scrolling to view the contents of

segments longer than 60 characters. Non-displayable characters are represented by a period (.).

To change the contents of any of the segments displayed in the screen body, type over the positions you want to change. All segments with changes are replaced in the database when you press Enter or a PF key.

If you're using a static PSB and the PSB does not have the replace processing option, the segment is protected.

Each valid keyboard interaction you initiate when in Character mode causes File-AID for IMS to start its segment replace sequence. Each currently displayed segment is scanned starting with the first (current) segment at the top of the screen body and proceeding segment by segment to the last segment displayed. Segments that were updated are replaced in the database. Any error detected by File-AID for IMS causes the replace sequence to be terminated. Updated segments on the display prior to the segment in error are successfully replaced in the database. Updated segments on the display following the segment in error are not replaced in the database until the segment in error is corrected. Changes made to segments below the segment in error are still reflected on the display.

Following are some common errors that File-AID for IMS detects during its replace sequence:

- The key value for a segment was typed over. IMS does not allow the key of an existing segment to be changed.
- Data was typed beyond the end of a fixed length segment.
- Data was typed beyond the defined maximum length of a variable length segment.

Note: You can correct typeover errors by issuing the CANCEL primary command **providing you haven't pressed the Enter key.** This will restore unprocessed segment contents to their prior values. Once the Enter key is pressed, the database is updated and the CANCEL command will only bring back the updated values.

In File-AID for IMS, nulls mode is set to ISPF's default of NULLS ON STD. Because type overs within trailing blanks are replaced with null characters on the Character screen, positional data may need to be padded with spaces. For further information, refer to the NULLS - Control Null Spaces section in Chapter 10 of the *ISPF/PDF Edit and Edit Macros Manual*.

You can increase the length of a variable length segment by typing characters beyond the segment's current length. In this situation, File-AID for IMS automatically adjusts the segment length to the position of the last non-blank character on that segment line. You cannot decrease segment lengths by deleting existing characters. Also, you cannot type over the two-byte size field that describes the current length of a variable length segment. To decrease the length of a variable length segment, use the unformatted mode.[1]

Character Screen - Hex Mode

In HEX mode, the screen body displays segments in three-line vertical hexadecimal format as shown in Figure 4-26 on page 4-49. Multiple sets of segments are separated by an intensified marker line.

The top line of the HEX display represents the character format of the current segment, the middle line represents the upper half-byte of each character in HEX, and the third line represents the lower half-byte of each character in HEX. To change segment

1. For Double-Byte Character Set (DBCS) support, each display line and record type values for multi-record type files are based on the data format mode (DBCS, MIXED, or EBCDIC). Refer to "Double-Byte Character Support" on page 2-4 for a description of File-AID for IMS's DBCS support.

contents, you can type over the character or HEX line. If you type over both the character and HEX lines for the same character, the character type over is ignored. All segments with changes are replaced in the data base when you press ENTER or a PF key.

Figure 4-26. Character Screen - Hex Mode

```
EDIT --- CW.FISAMP.ORDER ---- (DBD-PORDR   )                    COLS 00001 00060
COMMAND ===>                                                    SCROLL ===> CSR
   LEVEL  SEGMENT  ----+----1----+----2----+----3----+----4----+----5----+----6
__ 1      ORDR010  AA9999MEDIUM GRADE COAX                       CN0001     o W
                   CCFFFFDCCCED4CDCCC4CDCE4444444444444444444444CDFFFF0200698E
                   11999945494407914503617000000000000000000000035000100C536F6
                   ----+----*----+----*----+----*----+----*----+----*----+----*
__  2     ORDR020    01POOPEN   C66666XTRA SHORT COAX                EAWXWXBB555
                   0BFFDDDDCD444CFFFFFEEDC4ECDDE4CDCE444444444444444CCEEEECCFFF
                   02017667550003666667391028693036170000000000000051676722555
                   ----+----*----+----*----+----*----+----*----+----*----+----*
__   3    ORDR030  01QS        0KPRESSING       1988061419880706
                   FFDE00400040DDDDCEECDC4444444FFFFFFFFFFFFFFFF444444444444444
                   0182020C020C627952295700000001988061419880706000000000000000
                   ----+----*----+----*----+----*----+----*----+----*----+----*
__   3    ORDR030  04PO        0KCUTTING        1988071619880801
                   FFDD00200020DDCEEECDC44444444FFFFFFFFFFFFFFFF444444444444444
                   0476000C000C623433957000000001988071619880801000000000000000
                   ----+----*----+----*----+----*----+----*----+----*----+----*



ENTER FMT TO SWITCH TO FORMATTED MODE, UNFMT TO SWITCH TO UNFORMATTED MODE
```

Edit Character Primary Commands

All the primary commands described in “Common Edit Primary Commands” on page 4-25 can be used when editing in Character mode. References to the current segment position by the KEY, PARENT, and ROOT commands apply only to the first segment displayed in Character mode.

The following primary commands can also be used in Character mode. Refer to Chapter 11, “Primary Commands” for more information on these commands.

CANCEL Cancels changes made to displayed segments (edit only).

DOWN Scrolls toward end of database.

***GOH/GOT** Reposition the display to the first segment that was displayed when you entered the Edit Character mode.

***GOM** Changes database location displayed in Edit Character mode.

The operand description and execution of the GOM command in the Edit Character mode is identical to that explained in the Edit Formatted mode. Refer to page 4-36 for more information.

HEX Causes data to be displayed in either hexadecimal or character format.

LEFT Scrolls towards beginning of displayed segments.

MARK Names a database location for future reference.

The execution of the MARK command in the Edit Character mode is identical to that explained in the Edit Formatted mode. Refer to page 4-37 for more information.

RIGHT Scrolls towards end of displayed segments.

UP Controls database segments currently displayed in the screen body. Also, enables redisplay of segments that have scrolled off the display when a DOWN command is processed.

The UP command can be modified just like the DOWN command, by specifying a scrolling operand. Valid operands are integer values, PAGE, DATA, HALF, MAX, and CUR. Refer to "Scrolling" on page 1-13 for more information on the scrolling operands.

Note: The database position established when you enter the Character mode becomes the top of the display for execution of the UP command, even though this may not be the first physical segment in the database. As you move down the database hierarchy using the DOWN, FIND, or CHANGE commands, you will be able to execute the UP command to return to the top of the display that was established when you entered the Character mode.

If you switch between Character and Formatted/Unformatted modes and return to the Character mode, you will have the ability to execute the UP command as long as you have not changed the database position while in Formatted/Unformatted mode. If you change the database position while in Formatted/Unformatted mode and return to the Character mode, the new position becomes the top of the display for Character mode processing. Execution of the UP MAX command in Character mode will enable you to set the top of the display to the first physical segment in the database.

UP MAX Retrieves the first root segment in the database and displays it as the current segment on the first line of the screen body. The remainder of the screen body is filled with a hierarchical listing of the segments following the first root segment.

The Max operand can be abbreviated to M.

***Note:** Special care must be taken when executing the GOH/GOT or GOM commands with databases that contain nonkeyed or nonunique segments. Refer to "Nonkeyed and Nonunique Segments" on page 4-82 for additional information.

UP Command Options Screen

A large number of database calls may be required to execute an UP command. When the number of database calls exceeds 1000, the UP Command Options screen (Figure 4-27) is displayed. This screen shows the number of database calls required to process the UP command.

Figure 4-27. UP Command Options Screen

```
EDIT ------------------ File-AID for IMS - UP Command Options -----------------
COMMAND ===>

The UP command will cause File-AID for IMS to reposition in the
data base. This will require 2500 IMS GN calls.

 Press ENTER to process the UP command

 Or use

   END to return to current data base location
   GOH to go to the first location displayed in Character mode
   UP MAX to go to the first ROOT in the data base
   MARK to set or access bookmarked locations
   KEY for the Key Specification panel

 Threshold for IMS GN calls required by UP command: 1000
```

The following commands can be used on this screen:

- ENTER will process the UP command.
- END will return you to the current database location.
- GOH will navigate you to the first location displayed in Character mode.
- UP MAX will display the first root segment in the database.
- MARK will set or access bookmarked locations.
- KEY will display the Key Specification screen.

You can also change the threshold of database calls that triggers the display of the UP Command Options screen. Use the Threshold for IMS GN calls required by UP command field to change the threshold. This change will remain in effect for the current Browse/Edit session.

Navigation Options Screen

The Navigation Options screen (Figure 4-28) is displayed when it is not possible to establish database location to execute an UP command. This may occur when database partitions are not available or segments required to establish database location have been deleted.

Figure 4-28. Navigation Options Screen

```
EDIT ------------------ File-AID for IMS - Navigation Options -----------------
COMMAND ===>

The requested data base location is no longer available.
Use:

   END to return to current data base location
   GOH to go to the first location displayed in Character mode
   UP MAX to go to the first data base record
   MARK to set or access bookmarked locations
   KEY for the Key Specification panel
```

The following commands can be used on the Navigation Options screen:

- END will return you to the current database location.
- If the first database location displayed in Character mode is still accessible, the GOH command can be used to return to this location.
- UP MAX will navigate you to the first root segment in the database.
- MARK will set or access bookmarked locations.
- KEY will display the Key Specification screen.

Edit Character Line Commands

Line commands in Character mode are entered in the two-position line command column next to the appropriate segment. Line commands enable you to insert, delete, repeat, and bookmark segments, change your current position in the database, and select segments for formatted or unformatted editing.

Following are the browse/edit mode line commands:

K Displays the Key Specification screen.

MK Displays the Bookmark screen.

S Enters the Formatted mode.

SU Enters the Unformatted mode.

Following are the edit mode only line commands:

D Delete

I Insert

R Repeat

RA Repeat All

The following rules apply to the use of line commands:

- Only one of any of the I, R, RA, K, S, SU, or MK commands can be entered at one time.
- Any number of D line commands can be entered simultaneously, with or without one occurrence of one of the other line commands.
- D line commands are processed before any other line command.
- When a D line command is entered on a segment line, no other line command can be entered on any dependent segment.
- If all the segments currently displayed are deleted at the same time, the next hierarchical segment occurrence after the last segment deleted becomes the new current segment.
- Any line commands entered at the same as a CANCEL primary command are ignored. The CANCEL primary command is always executed before processing the remainder of the screen.
- If one of the K, S, or SU line commands is entered with any primary command other than CANCEL, the primary command is ignored.
- Other line command and primary command combinations are valid. Line commands are always processed before the primary command, except as noted for CANCEL.

A description of each line command is in Chapter 12, “Line Commands”. Each line command is valid in browse and edit modes, except as noted.

Key Specification

The Key Specification screen, shown in Figure 4-29, is used to specify the fully concatenated key of a segment occurrence that you want to retrieve or create. This screen can be invoked from other screens within the browse/edit conversation as follows:

- From the Data Base Location screen with the K, KU, or KC line command or the INSERT primary command (refer to “Edit Database Location” on page 4-18 and “Inserting a Segment” on page 4-22).
- From the Formatted screen, with the KEY, INSERT, or REPEAT primary command.
- From the Unformatted screen with the KEY, INSERT, or REPEAT primary command.
- From the Character screen, with the KEY primary command or the I, K, R, and RA line commands (refer to “KEY” on page 11-30 and “Edit Character Line Commands” on page 4-52).

Examples of how each of these four screens interact with the Key Specification screen are shown later in this section.

Figure 4-29. Key Specification Screen

```
KEY Specification - CW.FISAMP.ORDER------------------- SPECIFY KEY TO RETRIEVE
COMMAND ===>                                             SCROLL ===> CUR
Segment to RETRIEVE: ORDR030  ORDER STATUS
-------Level Number/Data-name------- -Format- RO ---------Field Value----------
LVL  1  ORDR010                                =
  05  ORDER-ROOT-KEY
    07  ORDER-NUMBER-PREFIX          C   2  K    AA
    07  ORDER-NUMBER                 Z   4  K    2222
------------------------------------ -------- -- ------------------------------
LVL  2  ORDR020                                =
01  * ORDR020 KEY *                  C   2  K    01
------------------------------------ -------- -- ------------------------------
LVL  3  ORDR030                                =
  05  STATUS-KEY
    07  PROCESS-INDICATOR            Z   2  K    01
********   END OF KEY   ********




Press Enter when the key value has been fully specified
Use END command to terminate Key Specification without processing the key
```

Segment to Retrieve

Displays the target segment that you want to retrieve, insert, or repeat. The last segment type shown in the screen body is referred to as the target segment type. If you entered the Key Specification screen with a primary command (KEY, INSERT, REPEAT), the target segment type is the same as the current segment type. However, if you entered the Key Specification screen with a line command (K, KU, KC, I, R, RA), the target segment type is the same as that of the segment on the line where you entered the command.

Level Number/Data-name

The first line in the first column of each section starts with the literal LVL and the hierarchical level number within the primary database of the segment type corresponding to that section. Next to the level number is the segment name.

The remaining lines in the first column of each section display the segment layout level numbers and data-names that define the key fields for that section's segment type. Where possible, File-AID for IMS shows the level numbers and data-names from the segment layout that defines the segment type. If a valid segment layout cannot be found or determined, File-AID for IMS generates a generic key field name in the format * segment-name KEY *, where segment-name is the name of the segment type for that section. File-AID for IMS also assigns a level number of 01 to generated key field names. The screen in Figure 4-29 shows an example of key field name generation.

Format

The Format column serves the same purpose on the Key Specification screen as on the Formatted screen - Character mode described on page 4-27.[1]

RO

When retrieving, inserting, or repeating the target segment, File-AID for IMS formats the SSA used in the DL/I call with the relational operator specified for each segment type. Following are the valid relational operators:

EQ or =	Equal
GT or >	Greater than
LT or <	Less than
GE or >= or =>	Greater than or equal to
LE or <= or =<	Less than or equal to
NE or ¬= or =¬	Not equal
UQ	Unqualified

The first six relational operators are identical to those you can use when coding an SSA in an IMS application program. File-AID for IMS uses the specified relational operator when issuing its DL/I calls. The UQ relational operator is unique to File-AID for IMS. When you specify UQ for a segment type, File-AID for IMS formats an unqualified SSA for that segment type.

When you enter the Key Specification screen, File-AID for IMS pre-formats the Relational Operator column for each segment type with an = or UQ as follows:

=	When a segment type is in the current hierarchical path and in the hierarchical path to the target segment.
UQ	When a segment type is in the hierarchical path to the target segment but not in the current hierarchical path.

Field Value

When you enter the Key Specification screen, the key field lines for each segment type in the current hierarchical path are pre-formatted with their current values. The key fields for segment types in the hierarchical path to the target segment but not in the current hierarchical path are pre-formatted with blanks (HEX 40s).

Each key field value line allows up to 30 characters to be entered. The valid syntax for key values is the same as described for field values on page 4-28. File-AID for IMS validates the length of the key value entered against the key length shown in the Format column for that line. If the value entered is shorter than the Format column's

1. For Double-Byte Character Set (DBCS) support, each display line is based on the data format mode (DBCS, MIXED, or EBCDIC). Refer to "Double-Byte Character Support" on page 2-4 for a description of File-AID for IMS's DBCS support.

key length, the value is padded with blanks (HEX 40s). If the value entered is longer, an error is returned.

Key field values display in either three-line vertical HEX or Character mode (Figure 4-29 on page 4-54). You can switch from one mode to another using the HEX ON/OFF command.

Note: By default, key field values are displayed in Character mode.

The top line of the HEX display (Figure 4-30), represents the character format of the key field value, the middle line represents the upper half byte of each character in HEX, and the third line represents the lower half-byte of each character in HEX. To change key value contents, you can type over the character or HEX line. If you type over both the character and HEX lines for the same character, the character type over is ignored.

Figure 4-30. Key Specification Screen - Hex Key Field Values

```
KEY Specification - PFHAUGO.FISAMP.ORDER --------------------------- LINE 00001
COMMAND ===>                                                  SCROLL ===> CSR
Segment to RETRIEVE: ORDR030  ORDER STATUS
-------Level Number/Data-name------- -Format- RO ---------Field Value----------
LVL  1  ORDR010                                =


  05  ORDER-ROOT-KEY


    07  ORDER-NUMBER-PREFIX          C   2  K    AA
                                                 CC
                                                 11
    07  ORDER-NUMBER                 Z   4  K    2222
                                                 FFFF
                                                 2222
----------------------------------- -------- -- ------------------------------



Press ENTER when the key value has been fully specified
Use END command to terminate Key Specification without processing the key
```

File-AID for IMS deviates from its normal relational operator and key field pre-formatting in the following situations:

- When the INSERT primary command is used to insert a target segment type that is not in the current hierarchical path, the relational operator is set to EQ and the KEY VALUE field to blanks.
- Non-keyed segment types always have UQ as the relational operator and the literal *** NON-KEYED SEGMENT *** in the Key Value Field column.
- When you enter the Key Specification screen from the Data Base Location screen with a K, KU, or KC line command, the Relational Operator field is set to EQ for all segment types displayed. The key values shown for each segment type are taken directly from the Key Value column on the Data Base Location screen. Refer to “Selecting a Segment” on page 4-19 for more information on how File-AID for IMS maintains key values on the Data Base Location screen.

Key Specification Primary Commands

You can enter only primary commands on the Key Specification screen. Many of these commands work exactly as on other File-AID for IMS screens. Scroll commands (UP, DOWN) apply only to scrollable lists and are described in "Scrolling" on page 1-13.

With Release 7.1, you can now use the HEX, ZOOM, and ZOOMH commands on the Key Specification screen.

HEX

The HEX primary command causes field values in the Key Specification screen to be displayed in either Hexadecimal or Character mode. Refer to Chapter 11, "Primary Commands" for more information on the HEX command.

ZOOM

The ZOOM primary command enables you to edit key field values with length exceeding 30 characters.

The limitations and execution of the ZOOM command and the display of Zoom Edit panel (after execution of the command) from the Key Specification screen are identical to those in the Edit Formatted screen. Refer to page 4-41 for more information.

Note: The RETURN primary command cannot be used on the Zoom Edit panel.

ZOOMH

The ZOOMH primary command enables you to edit key field values in a scrollable panel in three-line vertical hexadecimal format.

The limitations and execution of the ZOOMH command and the display of Zoomh Edit panel (after execution of the command) from the Key Specification screen are identical to those in the Edit Formatted screen. Refer to page 4-42 for more information.

Note: The RETURN primary command cannot be used on the Zoomh Edit panel.

Press Enter when you finish specifying the fully concatenated key to the target segment. File-AID for IMS processes your KEY, INSERT, or REPEAT request. If the request is successful, you are returned to the screen you were on when you entered the request. If the request cannot be completed, you receive an appropriate error message and remain on the Key Specification screen.

Key Specification Examples

You can invoke the Key Specification screen from four screens in the edit conversation. Each of the following four figures shows an example of the Key Specification process as initiated from one of the four screens.

Example 1

The first example shows the use of the K line command on the Data Base Location screen. The Key Specification screen is displayed to enable you to specify the segment to be retrieved. After the key is fully specified, the segment is displayed in Formatted mode.

In Figure 4-31 on page 4-58, the Data Base Location screen is shown with the current segment position on an occurrence of the ORDR030 segment type. When a K line command is entered on the ORDR010 root segment line, the Key Specification screen shown in Figure 4-32 on page 4-58 is displayed.

Figure 4-31. Entering a K Line Command on the EDIT - Data Base Location Screen

```
File-AID for IMS  ---  EDIT - Data Base Location  ----------------- LINE  00001
COMMAND ===>                                                  SCROLL ===> CUR

Line                                        Key                Key
Cmd -----Level----- Segment- --Description-Length-------------Value------------
K_* 1 DBD-PORDR     ORDR010  ORDER ROOT      006 AA2222
__*  2              ORDR020  ORDER LINE      002 01
__*   3             ORDR030  ORDER STATUS    002 01
__   2              ORDR040  ORDER SCRAP     008
__   2              ORDR050  ORDR-CUST LCHLD 002
                         *** END OF SEGMENT LIST ***






S  -- Select Formatted        K  -- Key Specification, then Select Formatted
SU -- Select Unformatted      KU -- Key Specification, then Select Unformatted
SC -- Select Character        KC -- Key Specification, then Select Character
```

Figure 4-32. Initial Key Specification Screen - K Line Command

```
KEY Specification - CW.FISAMP.ORDER ---------------- SPECIFY KEY TO RETRIEVE
COMMAND ===>                                                  SCROLL ===> CUR
Segment to RETRIEVE: ORDR010  ORDER ROOT
-------Level Number/Data-name------- -Format- RO ---------Field Value----------
LVL  1  ORDR010                                =
  05  ORDER-ROOT-KEY
    07  ORDER-NUMBER-PREFIX          C   2  K    AA
    07  ORDER-NUMBER                 Z   4  K    2222
********   END OF KEY   ********






Press Enter when the key value has been fully specified
Use END command to terminate Key Specification without processing the key
```

On the initial Key Specification screen, the relational operator for the ORDR010 segment is changed from = to > as shown in Figure 4-33 on page 4-59. When you press ENTER, File-AID for IMS and IMS search for the first ORDR010 segment occurrence with a key value greater than AA2222.

Figure 4-33. Key Specification Screen with Key Value Specified

```
KEY Specification - CW.FISAMP.ORDER ---------------- SPECIFY KEY TO RETRIEVE
COMMAND ===>                                              SCROLL ===> CUR
Segment to RETRIEVE: ORDR010  ORDER ROOT
-------Level Number/Data-name------- -Format- RO ---------Field Value----------
LVL  1  ORDR010                                >
  05  ORDER-ROOT-KEY
    07  ORDER-NUMBER-PREFIX          C   2  K    AA
    07  ORDER-NUMBER                 Z   4  K    2222
********   END OF KEY   ********



Press Enter when the key value has been fully specified
Use END command to terminate Key Specification without processing the key
```

An ORDR010 segment with a key of AA4444 is found and displayed in Formatted mode as shown in Figure 4-34.

Figure 4-34. Formatted Screen with New Current Segment

```
EDIT - CW.FISAMP.ORDER ---------------------------          SUCCESSFUL KEY CMD
COMMAND ===>                                                 SCROLL ===> CUR
PARENT
SEGMENT  ORDR010   CONCATENATED KEY: AA4444
--------LEVEL NUMBER/DATA-NAME--------- -FORMAT- ---------FIELD VALUE----------
01  ORDER-ROOT-DATA
  05  ORDER-ROOT-KEY
    07  ORDER-NUMBER-PREFIX             C   2  K AA
    07  ORDER-NUMBER                    Z   4  K 4444
  05  ORDER-DESCRIPTION                 C  40    HIGH PERFORMANCE COAX
      (POS 31-40)
  05  CUSTOMER-NUMBER                   C   6    CN0055
  05  PLANNED-ORDER-QUANTITY            PS  5    550
  05  PLANNED-ORDER-AMOUNT              P   5  2 5209.58
  05  ORDER-TYPE                        C   2    HT
  05  ACTUAL-ORDER-QUANTITY             PS  5    51
  05  TOTAL-SCRAP-QUANTITY              PS  5    INVALD X'F04040'
  05  TOTAL-SCRAP-REDEFINES             RDEFINES TOTAL-SCRAP-QUANTITY
                                        C   3    0
  05  ORDER-STATUS                      Z   2    03
  05  FILLER                            C   1
  05  FIRST-ACTIVITY-DATE
    07  FIRST-ACTIVITY-DATE-YR          C   4    1988
ENTER UNFMT TO SWITCH TO UNFORMATTED MODE, CHAR TO SWITCH TO CHARACTER MODE
```

Example 2

The second example shows how an existing segment occurrence can be copied.

In Figure 4-35 on page 4-60, the current segment on the Formatted screen is ORDR040 with a key of 01C7477A under the ORDR010 root with a key of AA2222. A REPEAT command is entered, and the Key Specification screen shown in Figure 4-36 on page 4-60 is displayed.

Figure 4-35. Entering a REPEAT Primary Command on the Formatted Screen

```
EDIT - CW.FISAMP.ORDER ------------------------- (DBD-PORDR       )- LINE 00001
COMMAND ===> REPEAT                                            SCROLL ===> CUR
PARENT   ORDR010
SEGMENT  ORDR040   CONCATENATED KEY: AA2222,01C7477A
--------LEVEL NUMBER/DATA-NAME--------- -FORMAT- ---------FIELD VALUE----------
01  SCRAP-DATA
  05  SCRAP-KEY
    07  PROCESS-INDICATOR               C   2  K 01
    07  PART-NUMBER                     C   6  K C7477A
  05  MATERIAL-TYPE-INDICATOR           C   2    RM
  05  SCRAP-QTY                         PS  5  2 INVALD X'40404040'
  05  REASON-CODE                       C   2    BS
  05  DESCRIPTION                       C  15    BURNT MATERIAL
  05  REWORK-INDICATOR                  C   1    Y
  05  SCRAP-DATE                        Z   8    19880912
*** END OF LAYOUT. LENGTH =    40 ***




ENTER UNFMT TO SWITCH TO UNFORMATTED MODE, CHAR TO SWITCH TO CHARACTER MODE
```

Figure 4-36. Initial Key Specification Screen - REPEAT Primary Command

```
KEY Specification - CW.FISAMP.ORDER ----------------- SPECIFY KEY FOR REPEAT
COMMAND ===>                                                   SCROLL ===> CUR
Segment to REPEAT: ORDR040  ORDER SCRAP
-------Level Number/Data-name------- -Format- RO ---------Field Value----------
LVL  1  ORDR010                                =
  05  ORDER-ROOT-KEY
    07  ORDER-NUMBER-PREFIX           C   2  K    AA
    07  ORDER-NUMBER                  Z   4  K    2222
------------------------------------ -------- -- ------------------------------
LVL  2  ORDR040                                =
01  SCRAP-DATA
  05  SCRAP-KEY
    07  PROCESS-INDICATOR             C   2  K    01
    07  PART-NUMBER                   C   6  K    C7477A
  05  MATERIAL-TYPE-INDICATOR         C   2       RM
  05  SCRAP-QTY                       PS 5  2     INVALD X'40404040'
  05  REASON-CODE                     C   2       BS
  05  DESCRIPTION                     C  15       BURNT MATERIAL
  05  REWORK-INDICATOR                C   1       Y
  05  SCRAP-DATE                      Z   8       19880912
*** END OF LAYOUT. LENGTH=    40 ***
Press Enter when the key value has been fully specified
Use END command to terminate Key Specification without processing the key
```

On the initial Key Specification screen, a key of 02C7477A is specified for the ORDR040 segment to be created as a result of the REPEAT command under the ORDR010 segment with a key of AA4444. When you press ENTER, File-AID for IMS and IMS insert the new segment using the data from the ORDR040 segment as it is displayed on the screen (Figure 4-37 on page 4-61). After the repeat is performed, the new ORDR040 segment becomes the current segment as shown on the Formatted screen in Figure 4-38 on page 4-61.

Figure 4-37. Specifying the Key and Any Data Field Changes for the Target Segment

```
KEY Specification - CW.FISAMP.ORDER ----------------- SPECIFY KEY FOR REPEAT
COMMAND ===>                                              SCROLL ===> CUR
Segment to REPEAT: ORDR040  ORDER SCRAP
-------Level Number/Data-name------- -Format- RO ---------Field Value----------
LVL  1  ORDR010                                =
  05  ORDER-ROOT-KEY
    07  ORDER-NUMBER-PREFIX          C   2  K    AA
    07  ORDER-NUMBER                 Z   4  K    4444
------------------------------------ -------- -- ------------------------------
LVL  2  ORDR040                                =
01  SCRAP-DATA
  05  SCRAP-KEY
    07  PROCESS-INDICATOR            C   2  K    02
    07  PART-NUMBER                  C   6  K    C7477A
  05  MATERIAL-TYPE-INDICATOR        C   2       RM
  05  SCRAP-QTY                      PS 5  2     INVALD X'40404040'
  05  REASON-CODE                    C   2       BS
  05  DESCRIPTION                    C  15       BURNT MATERIAL
  05  REWORK-INDICATOR               C   1       Y
  05  SCRAP-DATE                     Z   8       19880912
*** END OF LAYOUT. LENGTH=    40 ***

Press Enter when the key value has been fully specified
Use END command to terminate Key Specification without processing the key
```

Figure 4-38. Formatted Screen - Positioned on a New Segment

```
EDIT - CW.FISAMP.ORDER --------------------------         SUCCESSFUL REPEAT CMD
PARENT   ORDR010
SEGMENT  ORDR040   CONCATENATED KEY: AA4444,02C7477A
--------LEVEL NUMBER/DATA-NAME--------- -FORMAT- ---------FIELD VALUE----------
01  SCRAP-DATA
  05  SCRAP-KEY
    07  PROCESS-INDICATOR              C   2  K 02
    07  PART-NUMBER                    C   6  K C7477A
  05  MATERIAL-TYPE-INDICATOR          C   2    RM
  05  SCRAP-QTY                        PS  5  2 INVALD X'40404040'
  05  REASON-CODE                      C   2    BS
  05  DESCRIPTION                      C  15    BURNT MATERIAL
  05  REWORK-INDICATOR                 C   1    Y
  05  SCRAP-DATE                       Z   8    19880912
*** END OF LAYOUT. LENGTH =    40 ***





ENTER UNFMT TO SWITCH TO UNFORMATTED MODE, CHAR TO SWITCH TO CHARACTER MODE
```

Example 3

The third example shows how a new segment can be inserted into a database.

In Figure 4-39 on page 4-62, the current segment on the Unformatted screen is an ORDR010 segment with a key value of AA2222. When an INSERT command is entered with ORDR030 as the SEGMENT-NAME operand the Key Specification screen shown in Figure 4-40 on page 4-62 is displayed.

Figure 4-39. Entering an INSERT Primary Command on the Unformatted Screen

```
EDIT --- CW.FISAMP.ORDER ------------------------------------ (DBD-PORDR       )-
COMMAND ===> INSERT ORDR030                                     SCROLL ===> CUR

PARENT
SEGMENT  ORDR010   CONCATENATED KEY: AA2222
SEG LENGTH ===> 167
      ----+----1----+----2----+----3----+----4----+----5----+----6----+----7

    1 AA2222INDUSTRIAL GRADE COAXIAL CABLE          CN0001.&.....WS   ...01<
      CCFFFFCDCEEEDCCD4CDCCC4CDCECCD4CCCDC4444444444CDFFFF0500578EE444000FF4
      1122229544239913079145036179130312350000000000350001 00C365F6200001C01C
      ----+----*----+----*----+----*----+----*----+----*----+----*----+----*
   71 1988083019880914.........P....P....................|..|................
      FFFFFFFFFFFFFFFF01001000499004990000000013000130004004001200012000000 0
      19880830198809 1402F02F0087C0087C01F01F0023C0023C02F02F0064C0064C00F00F
      ----+----*----+----*----+----*----+----*----+----*----+----*----+----*
  141 ...........................B
      00000000000000000000000000C
      0000C0000C00F00F0000C0000C2



ENTER FMT TO SWITCH TO FORMATTED MODE, CHAR TO SWITCH TO CHARACTER MODE
```

Figure 4-40. Initial Key specification Screen - INSERT Command

```
KEY Specification - CW.FISAMP.ORDER ----------------- SPECIFY KEY FOR INSERT
COMMAND ===>                                                    SCROLL ===> CUR
Segment to INSERT: ORDR030  ORDER STATUS
-------Level Number/Data-name------- -Format- RO ---------Field Value----------
LVL  1  ORDR010                                =
  05  ORDER-ROOT-KEY
    07  ORDER-NUMBER-PREFIX          C   2  K    AA
    07  ORDER-NUMBER                 Z   4  K    2222
------------------------------------ -------- -- ------------------------------
LVL  2  ORDR020                                UQ
01  * ORDR020 KEY *                  C   2  K
------------------------------------ -------- -- ------------------------------
LVL  3  ORDR030                                =
01  * ORDR030 SEGMENT *
  03  * KEY *                        C   2  K
  03  * DATA1 *                      C  43
   (POS 31-43)
*** END OF LAYOUT.  LENGTH=   45 ***



Press Enter when the key value has been fully specified
Use END command to terminate Key Specification without processing the key
```

On the initial Key Specification screen, the relational operator for the ORDR020 segment type is changed from UQ to EQ, and a key value of 01 is specified. Field Values of 03 and 11-10-89 are entered as shown in Figure 4-41 on page 4-63. These changes cause File-AID for IMS and IMS to insert a new occurrence of the ORDR030 segment with a key of 03 under the existing ORDR010 and ORDR020 segments with keys of AA2222 and 01, respectively.

Figure 4-41. Specifying the Key and the Data Fields for the Segment to be Inserted.

```
KEY Specification - CW.FISAMP.ORDER ----------------- SPECIFY KEY FOR INSERT
COMMAND ===>                                                SCROLL ===> CUR
Segment to INSERT: ORDR030  ORDER STATUS
-------Level Number/Data-name------- -Format- RO ---------Field Value----------
LVL  1  ORDR010                                =
  05  ORDER-ROOT-KEY
    07  ORDER-NUMBER-PREFIX          C   2  K    AA
    07  ORDER-NUMBER                 Z   4  K    2222
------------------------------------ -------- -- ------------------------------
LVL  2  ORDR020                                EQ
01  * ORDR020 KEY *                  C   2  K    01
------------------------------------ -------- -- ------------------------------
LVL  3  ORDR030                                =
01  * ORDR030 SEGMENT *
  03  * KEY *                        C   2  K    03
  03  * DATA1 *                      C  43       11-10-89
   (POS 31-43)
*** END OF LAYOUT.  LENGTH=   45 ***



Press Enter when the key value has been fully specified
Use END command to terminate Key Specification without processing the key
```

After the insert is complete, the new ORDR030 segment becomes the current segment as shown on the Unformatted screen in Figure 4-42.

Figure 4-42. Unformatted Screen - Positioned on the New Segment

```
EDIT --- CW.FISAMP.ORDER ----------------------------- SUCCESSFUL INSERT CMD
COMMAND ===>                                                SCROLL ===> CUR
PARENT   ORDR020
SEGMENT  ORDR030   CONCATENATED KEY: AA2222,01,03
SEG LENGTH ===> 45
     ----+----1----+----2----+----3----+----4----+----5----+----6----+----7

    1 0311-10-89
      FFFFCFFCFF444444444444444444444444444444444444
      031101008900000000000000000000000000000000000000


ENTER FMT TO SWITCH TO FORMATTED MODE, CHAR TO SWITCH TO CHARACTER MODE
```

Example 4

The fourth example shows how a segment occurrence and all its dependents can be copied using the RA line command.

In Figure 4-43 on page 4-64, an RA line command is entered on the ORDR010 segment line at the top of the Character screen body. When ENTER is pressed, the Key Specification screen shown in Figure 4-44 on page 4-64 is displayed.

Figure 4-43. Entering an RA Line Command on the Character Screen

```
EDIT --- CW.FISAMP.ORDER ------------------- (DBD-PORDR     )  COLS 00001 00060
COMMAND ===>                                                    SCROLL ===> CUR
   LEVEL  SEGMENT  ----+----1----+----2----+----3----+----4----+----5----+----6
RA 1      ORDR010  CC1111COAXIAL CABLE - BULK                     CN0099.......G
__  2     ORDR020  ..01POCLOSED C44444COAXIAL CABLE - WHITE         EAWW  PO-C1
__   3    ORDR030  01QA.. ... .OKMILLING CMPLTE 1988021419880306
__  2     ORDR020  .>02WOOPEN   C77777COAXIAL CABLE - XTRA LONG     OVEA12230RO
__  2     ORDR020  ..04WOOPEN   C22222COAXIAL CABLE - BLACK         INLBW222-2S
__  2     ORDR040  01P321-5WS....QA                19881002
__  2     ORDR050  CN00990101...........                  0......
__  2     ORDR050  CN00990202...........                  0......
                  ****************** BOTTOM OF DATA BASE ********************
```

Figure 4-44. Initial Key Specification Screen - RA Line Command

```
KEY Specification - CW.FISAMP.ORDER ----------------- SPECIFY KEY FOR REPEAT
COMMAND ===>                                                    SCROLL ===> CUR
Segment to REPEAT: ORDR010  ORDER ROOT
-------Level Number/Data-name------- -Format- RO ---------Field Value----------
LVL  1  ORDR010                                =
01  ORDER-ROOT-DATA
  05  ORDER-ROOT-KEY
    07  ORDER-NUMBER-PREFIX          C   2  K    CC
    07  ORDER-NUMBER                 Z   4  K    1111
  05  ORDER-DESCRIPTION              C  40       COAXIAL CABLE - BULK
      (POS 31-40)
  05  CUSTOMER-NUMBER                C   6       CN0099
  05  PLANNED-ORDER-QUANTITY         PS  5       23
  05  PLANNED-ORDER-AMOUNT           P  5  2     23.00
  05  ORDER-TYPE                     C   2       G
  05  ACTUAL-ORDER-QUANTITY          PS  5       23
  05  TOTAL-SCRAP-QUANTITY           PS  5       2
  05  TOTAL-SCRAP-REDEFINES          RDEFINES    TOTAL-SCRAP-QUANTITY
                                     C   3       INVALD X'00002C'
  05  ORDER-STATUS                   Z   2       07
  05  FILLER                         C   1
Press Enter when the key value has been fully specified
Use END command to terminate Key Specification without processing the key
```

On the initial Key Specification screen, a new key of CC2222 is specified for the ORDR010 segment. When ENTER is pressed File-AID for IMS and IMS insert the new ORDR010 segment using the data from the ORDR010 segment displayed on the screen shown in Figure 4-45 on page 4-65.

Figure 4-45. Specifying the Key and Data Fields for the Parent of the Substructure

```
KEY Specification - CW.FISAMP.ORDER ---------------- SPECIFY KEY FOR REPEAT
COMMAND ===>                                            SCROLL ===> CUR
Segment to REPEAT: ORDR010  ORDER ROOT
-------Level Number/Data-name------- -Format- RO ---------Field Value----------
LVL  1  ORDR010                                =
01  ORDER-ROOT-DATA
  05  ORDER-ROOT-KEY
    07  ORDER-NUMBER-PREFIX          C   2  K    CC
    07  ORDER-NUMBER                 Z   4  K    2222
  05  ORDER-DESCRIPTION              C  40       COAXIAL CABLE - BULK
      (POS 31-40)
  05  CUSTOMER-NUMBER                C   6       CN0099
  05  PLANNED-ORDER-QUANTITY         PS  5       23
  05  PLANNED-ORDER-AMOUNT           P  5  2     23.00
  05  ORDER-TYPE                     C   2       G
  05  ACTUAL-ORDER-QUANTITY          PS  5       23
  05  TOTAL-SCRAP-QUANTITY           PS  5       2
  05  TOTAL-SCRAP-REDEFINES          RDEFINES    TOTAL-SCRAP-QUANTITY
                                     C   3       INVALD X'00002C'
  05  ORDER-STATUS                   Z   2       07
  05  FILLER                         C   1

Press Enter when the key value has been fully specified
Use END command to terminate Key Specification without processing the key
```

A new ORDR010 segment is created with copies of the dependents of the CC1111 ORDR010 segment inserted under the CC2222 ORDR010 segment. Current position on the Character screen is not affected by the RA line command. The newly created substructure is placed under the original substructure as shown in Figure 4-46.

Figure 4-46. Character Screen - New Substructure Displayed After Old One

```
EDIT --- CW.FISAMP.ORDER ------------------- (DBD-P      SUCCESSFUL REPEAT CMD
COMMAND ===>                                              SCROLL ===> CUR
   LEVEL  SEGMENT  ----+----1----+----2----+----3----+----4----+----5----+-----
__ 1      ORDR010  CC1111COAXIAL CABLE - BULK                    CN0099.......G
__  2     ORDR020  ..01POCLOSED C44444COAXIAL CABLE - WHITE         EAWW  PO-C1
__   3    ORDR030  01QA.. ... .OKMILLING CMPLTE 1988021419880306
__  2     ORDR020  .>02WOOPEN   C77777COAXIAL CABLE - XTRA LONG     OVEA12230RO
__  2     ORDR020  ..04WOOPEN   C22222COAXIAL CABLE - BLACK         INLBW222-2S
__  2     ORDR040  01P321-5WS....QA                19881002
__  2     ORDR050  CN00990101............                  0......
__  2     ORDR050  CN00990202............                  0......
__ 1      ORDR010  CC2222COAXIAL CABLE - BULK                    CN0099.......G
__  2     ORDR020  ..01POCLOSED C44444COAXIAL CABLE - WHITE         EAWW  PO-C1
__   3    ORDR030  01QA.. ... .OKMILLING CMPLTE 1988021419880306
__  2     ORDR020  .>02WOOPEN   C77777COAXIAL CABLE - XTRA LONG     OVEA12230RO
__  2     ORDR020  ..04WOOPEN   C22222COAXIAL CABLE - BLACK         INLBW222-2S
__  2     ORDR040  01P321-5WS....QA                19881002
__  2     ORDR050  CN00990101............                  0......
__  2     ORDR050  CN00990202............                  0......
                  ****************** BOTTOM OF DATA BASE ******************


ENTER FMT TO SWITCH TO FORMATTED MODE, UNFMT TO SWITCH TO UNFORMATTED MODE
```

Secondary Indexing

Entering **Y** in the Use Secondary Indexing field on the Data Base Specification screen (Figure 4-47 on page 4-66) accesses a physical or logical database through a secondary index. All other features within the Edit Data Base option work the same as when secondary indexing is not used.

Figure 4-47. EDIT - Data Base Specification Screen

```
File-AID for IMS  -------  EDIT - Data Base Specification  --------------------
COMMAND ===>

                 Region type ===> DLI        (DLI or BMP)
            DBDLIB dataset 1 ===> 'CW.FISAMP.DBDLIB3'
                   Dataset 2 ===>
                      Member ===> PORDR      (Blank or pattern for member list)
     Use secondary indexing ===> Y           (Y = Yes; N = No)
           Exclude segments ===> N           (Y = Yes; N = No; DLI and BMP only)
--------------------------------------------------------------------------------
          Use COBOL layouts ===> Y           (Y = Yes; N = No)
Segment/Layout XREF dataset ===> 'CW.FISAMP.XREF'
                      Member ===> PORDR      (Blank or pattern for member list)

     COBOL layout dataset 1 ===> 'CW.FISAMP.COBOLLIB1'
                   Dataset 2 ===>
--------------------------------------------------------------------------------
         Create audit trail ===> N           (Y = Yes; N = No)

For DLI processing specify the following:
      IMS log dataset usage ===> N           (AK = Allocate; keep after edit
                                              AD = Allocate; delete after edit
                                              N  = Do not use log dataset)
```

The screens in this section provide an example of editing a physical database, PORDR, with secondary indexing. Only the screen contents supporting secondary indexing are described. For more information on the screen contents not mentioned, refer to the section that describes the screen in question.

To guarantee the uniqueness of the secondary index's key, special considerations are taken by File-AID for IMS when you edit the source segment of a secondary index. Refer to "Secondary Index Special Considerations" on page 4-73.

Database Specification

Only the Use Secondary Indexing and Member fields on the Data Base Specification screen affect the use of secondary indexing. Specify whether the database you are editing (either a physical or logical DBD) is to be accessed through a secondary index in the Use Secondary Indexing field.

Based on the Member field, one of the following screens is displayed after you complete the Data Base Specification screen and press Enter:

- If you specify a DBD with only one secondary index, the Data Base Dataset Specification screen is displayed or, if the Exclude Segments field is set to Y, the Exclude Segment Specification screen is displayed.
- When you specify a DBD with two or more secondary indexes, the Secondary Index DBD List screen is displayed. If you specify a secondary index DBD, the Secondary Index DBD List screen is bypassed. The next screen displayed is determined by the region type specified.

  If the region type is DL/I, the Data Base Dataset Specification screen is directly accessed. If the region type is BMP, a selection screen is displayed before the appropriate Region Type Specification screen is directly accessed.
- If you do not specify a DBD member, the DBD Member List screen is displayed. When you select a DBD member from the member list, the Secondary Index DBD List screen is displayed (provided the DBD has two or more associated secondary indexes).
- If you specify a DBD with no secondary index, an error message is displayed on the Data Base Specification screen and the cursor is placed on the Use Secondary Index field.

Secondary Index Database List

The Secondary Index Database List screen, shown in Figure 4-48, provides a list of the secondary indexes that you can use to access the database you specified on the Data Base Specification screen or selected from the Member List screen. The Secondary Index Data Base List screen is displayed only if Y is specified in the Use Secondary Indexing field and the primary DBD has two or more secondary indexes.

Figure 4-48. Secondary Index Data Base List Screen

```
File-AID for IMS  -------  Secondary Index Data Base List  --------------------
COMMAND ===>                                                 SCROLL ===> CUR
Primary data base: PORDR
Line  Index    Target    Source
 Cmd   DBD     Segment   Segment                 Source Field(s)
---- --------  --------  --------  ---------------------------------------------
     SORDR1    ORDR010   ORDR010   CUSTNUM
S    SORDR4    ORDR010   ORDR040   MATTYPE,RCODE
     SORDR2    ORDR020   ORDR020   PARTNUM
               ***  END OF DBD LIST  ***









Enter "S" to select the secondary index for PORDR
```

The order of the secondary indexes listed is based on the order of the secondary indexes defined in the physical DBD.

Line Cmd

Enter S to select the secondary index.

Index DBD

The secondary index DBD name.

Target Segment

The segment that resides in the primary database and is pointed to by the secondary index's pointer segment.

Source Segment

The segment that resides in the primary database and contains the source fields used to retrieve the target segment.

Source Field(s)

Displays a list of up to five fields defined in the source segment that are used as the key to retrieve the target segment. The source fields are listed in the sequence of concatenation for the target segment's key.

Selecting a Secondary Index

You can select a secondary index DBD from the list in one of the following ways:

- Move the cursor down the left side of the screen and enter S in front of a secondary index DBD.
- Enter the SELECT primary command in the Command field.

Terminating the Screen

Do one of the following to terminate the Secondary Index Data Base List screen:

- Press Enter. If you entered Y in the Exclude Segments field on the Data Base Specification screen, the Exclude Segment Specification screen is displayed. Otherwise, based on the region type specified, the Data Base Dataset Specification screen or the appropriate Region Type Specification screen is displayed.
- Enter END if you want to terminate the Secondary Index DBD List screen. The Data Base Specification screen is displayed
- Enter the RETURN command to return directly to the Primary Option Menu.

Because no segments were excluded in the PORDR example and the region type was DL/I, the next screen displayed is the Data Base Dataset Specification screen.

Database Dataset Specification

The Data Base Dataset Specification screen, shown in Figure 4-49, is used to enter all the database dataset names associated with the database you want to edit, including the dataset names for secondary indexes.

Figure 4-49. EDIT - Data Base Dataset Specification Screen

```
------   EDIT ------ Data Base Dataset Specification   (DBD-IXPCUST ) LINE 00001
COMMAND ===>                                                  SCROLL ===> CSR

Obtain DB Dataset Names from ===> P   (P = Previously used with 'P' here,      S
                                       I = IMS dynamic allocation source)      H
                                                                               R
DBRC not active                                                              D
                                                                             I  L
                                                                             S  E
DBD       DDNAME     DATASET NAME                                 PASSWORD   P  V
--------- ---------- ------------------------------------------ --------- --- -
IXPCUST   IXPCUSTD   FISAMP.CUSTOMER                                        SHR N
IXPORDR   IXPORDRD   FISAMP.ORDER                                           SHR N
               ***   END OF DATA BASE DATASET NAMES   ***









Press Enter when data base datasets have been fully designated
Use END command to end Edit Data Base Dataset Specification
```

Obtain DB Dataset Names from

If your installation uses dynamic allocation for databases, specify I to retrieve the database dataset names from the datasets allocated to the DFSRESLB DD. If File-AID for IMS cannot retrieve the dataset name, the message "UNABLE_TO_DETERMINE" is displayed in the Dataset Name field.

If you specify P, the dataset name fields are formatted from your user profile dataset.

Terminating the Screen

Do one of the following to terminate the Data Base Dataset Specification screen:

- Press Enter to proceed to the Data Base Location screen.

- Enter the END command to return to the Data Base Specification screen.
- Enter the RETURN command to return directly to the Primary Option Menu.

Database Location

The Data Base Location screen, shown in Figure 4-50, displays the hierarchical sequence of the segment types in the database. When using secondary indexing, the target segment in the primary DBD becomes the root segment. This process can restructure the hierarchical sequence when the target segment is not the root segment in the primary database.

In Figure 4-50, the hierarchical sequence for PORDR is based on the SORDR4 secondary index. Because it is the target segment for SORDR4, the ORDR010 segment becomes the root segment with the total of the source field lengths as the root key length.

In this example, the hierarchical sequence is not restructured because SORDR4's target segment is the same as PORDR's root segment. Also, to identify the secondary index used for secondary indexing, the DBD name of the secondary index (SORDR4) is shown on the root segment's level-number line.

Figure 4-50. EDIT - Data Base Location Screen

```
File-AID for IMS  ---  EDIT - Data Base Location  ----------------- LINE  00001
COMMAND ===>                                                  SCROLL ===> CUR

Line                                        Key                Key
Cmd -----Level----- Segment- --Description-Length-------------Value------------
S_* 1 DBD-SORDR4    ORDR010  ORDER ROOT      004 RMBS
__   2              ORDR020  ORDER LINE      002
__    3             ORDR030                  002
__   2              ORDR040  ORDER SCRAP     008
__   2              ORDR050  ORDR-CUST LCHLD 002
                         *** END OF SEGMENT LIST ***






S  -- Select Formatted        K  -- Key Specification, then Select Formatted
SU -- Select Unformatted      KU -- Key Specification, then Select Unformatted
SC -- Select Character        KC -- Key Specification, then Select Character
```

Formatted Screen

The Formatted screen, shown in Figure 4-51 on page 4-70, is displayed when you select the ORDR010 root segment on the Data Base Location screen. When you use secondary indexing, the key feedback area contains the source fields from the source segment as the root segment's key. These source fields are displayed as the target segment's key in the concatenated key display in the Formatted screen's fourth heading line. When positioned on a source segment, the Formatted screen displays an S in the Format column for each source field.

Figure 4-51. Formatted Screen

```
EDIT - CW.DB.PORDRDD ---------------------------- (DBD-PORDR     )- LINE 00001
COMMAND ===> INSERT ORDR040                                   SCROLL ===> CUR
PARENT
SEGMENT  ORDR010   CONCATENATED KEY: RMBS
--------LEVEL NUMBER/DATA-NAME--------- -FORMAT- ---------FIELD VALUE----------
01  ORDER-ROOT-DATA
  05  ORDER-ROOT-KEY
    07  ORDER-NUMBER-PREFIX             C   2  K AA
    07  ORDER-NUMBER                    Z   4  K 2222
  05  ORDER-DESCRIPTION                 C  40    INDUSTRIAL GRADE COAXIAL CABLE
      (POS 31-40)
  05  CUSTOMER-NUMBER                   C   6    CN0001
  05  PLANNED-ORDER-QUANTITY            PS  5    500
  05  PLANNED-ORDER-AMOUNT              P   5  2 3567.58
  05  ORDER-TYPE                        C   2    WS
  05  ACTUAL-ORDER-QUANTITY             PS  5    INVALD X'404040'
  05  TOTAL-SCRAP-QUANTITY              PS  5    10
  05  TOTAL-SCRAP-REDEFINES             RDEFINES TOTAL-SCRAP-QUANTITY
                                        C   3    INVALD X'00010C'
  05  ORDER-STATUS                      Z   2    01
  05  FILLER                            C   1    <
  05  FIRST-ACTIVITY-DATE
    07  FIRST-ACTIVITY-DATE-YR          C   4    1988
ENTER UNFMT TO SWITCH TO UNFORMATTED MODE, CHAR TO SWITCH TO CHARACTER MODE
```

After you press Enter, the Key Specification screen is displayed to enable you to insert a new ORDR040 segment.

Key Specification Screen

When you use secondary indexing, the target segment's key based on the source fields defined in the source segment is formatted and displayed on the Key Specification screen. The first screen body line for the target segment (hierarchical level one) contains a literal, SECONDARY SEQ, to indicate that you are using secondary indexing. In the Format column, an S is displayed for each source field in the target segment's key and in the source segment.

When **Y** is specified for the Use Layouts field on the Data Base Specification screen, the level numbers and the data-names shown on the Key Specification screen are taken from the appropriate segment layouts for the segment that is inserted and its parents. Figure 4-52 on page 4-71 through Figure 4-54 on page 4-72 provide an example of inserting an ORDR040 source segment while using segment layouts.

When **N** is entered for the Use Layouts field on the Data Base Specification screen, File-AID for IMS automatically generates generic level numbers and data-names for the segment being inserted and its parents. An example of inserting an ORDR040 source segment in this situation is shown in Figure 4-55 on page 4-72 through Figure 4-57 on page 4-73.

When you insert a new source segment for a secondary index, IMS creates a pointer segment in the secondary index database. The new pointer segment's key is based on the source fields specified in the source segment on the Key Specification screen.

When you use the REPEAT command to create a segment or the KEY command to reposition to a different segment, the information on the Key Specification screen is presented in the same manner as when you insert a segment with the INSERT command.

Refer to "Secondary Index Special Considerations" on page 4-73 for further information on editing and creating source segments.

Inserting ORDR040 With a Segment Layout

For the target segment's key, File-AID for IMS formats the level numbers and data-names that define each source field in the segment layout (Figure 4-52). File-AID for IMS generates a comment line before each source field's 01 level number and data-name.

The format of the comment line is based on the language mode used. For COBOL, the comment line is identified by an asterisk (*). For PL/I, the comment line is identified by a slash and an asterisk (/*, */). Each comment line contains a literal (SOURCE FIELD), a source field sequence number, and the source field's name from the primary DBD.

Figure 4-52. Insert of Segment with Segment Layouts while Using Secondary Indexing

```
KEY Specification - CW.DB.PORDRDD ------------------- SPECIFY KEY FOR INSERT
COMMAND ===>                                            SCROLL ===> CUR
Segment to INSERT: ORDR040  ORDER SCRAP
-------Level Number/Data-name------- -Format- RO ---------Field Value----------
LVL  1  ORDR010 - SECONDARY SEQ               =
*  SOURCE FIELD 1 - MATTYPE  *
01  SCRAP-DATA
  05  MATERIAL-TYPE-INDICATOR        C   2  S    RM
*  SOURCE FIELD 2 - RCODE    *
01  SCRAP-DATA
  05  REASON-CODE                    C   2  S    BS
------------------------------------ -------- -- ------------------------------
LVL  2  ORDR040                               =
01  SCRAP-DATA
  05  SCRAP-KEY
    07  PROCESS-INDICATOR            C   2  K
    07  PART-NUMBER                  C   6  K
  05  MATERIAL-TYPE-INDICATOR        C   2  S
  05  SCRAP-QTY                      PS 5  2     0.00
  05  REASON-CODE                    C   2  S
  05  DESCRIPTION                    C  15
Press Enter when the key value has been fully specified
Use END command to terminate Key Specification without processing the key
```

Figure 4-53. Specify New Keys for Segment with a Segment Layout

```
KEY Specification - CW.DB.PORDRDD ------------------- SPECIFY KEY FOR INSERT
COMMAND ===>                                            SCROLL ===> CUR
Segment to INSERT: ORDR040  ORDER SCRAP
-------Level Number/Data-name------- -Format- RO ---------Field Value----------
LVL  1  ORDR010 - SECONDARY SEQ               =
*  SOURCE FIELD 1 - MATTYPE  *
01  SCRAP-DATA
  05  MATERIAL-TYPE-INDICATOR        C   2  S    RM
*  SOURCE FIELD 2 - RCODE    *
01  SCRAP-DATA
  05  REASON-CODE                    C   2  S    BS
------------------------------------ -------- -- ------------------------------
LVL  2  ORDR040                               =
01  SCRAP-DATA
  05  SCRAP-KEY
    07  PROCESS-INDICATOR            C   2  K    SS
    07  PART-NUMBER                  C   6  K    SX0320
  05  MATERIAL-TYPE-INDICATOR        C   2  S    TR
  05  SCRAP-QTY                      PS 5  2     0.00
  05  REASON-CODE                    C   2  S    OK
  05  DESCRIPTION                    C  15

Press Enter when the key value has been fully specified
Use END command to terminate Key Specification without processing the key
```

Figure 4-54. Formatted Screen with New Segment

```
EDIT - CW.DB.PORDRDD ----------------------------       SUCCESSFUL INSERT CMD
COMMAND ===>                                                 SCROLL ===> CUR
PARENT   ORDR010
SEGMENT  ORDR040   CONCATENATED KEY: RMBS,SSSX0320
--------LEVEL NUMBER/DATA-NAME--------- -FORMAT- ---------FIELD VALUE----------
01  SCRAP-DATA
  05  SCRAP-KEY
    07  PROCESS-INDICATOR              C   2  K SS
    07  PART-NUMBER                    C   6  K SX0320
  05  MATERIAL-TYPE-INDICATOR          C   2  S TR
  05  SCRAP-QTY                        PS  5  2 0.00
  05  REASON-CODE                      C   2  S OK
  05  DESCRIPTION                      C  15
  05  REWORK-INDICATOR                 C   1
  05  SCRAP-DATE                       Z   8    00000000
*** END OF LAYOUT. LENGTH =    40 ***





ENTER UNFMT TO SWITCH TO UNFORMATTED MODE, CHAR TO SWITCH TO CHARACTER MODE
```

Inserting ORDR040 With a Generic Layout

For the target segment's key, File-AID for IMS formats an 01 level number with a generic key-field name that contains the segment's name (Figure 4-55). For lower level numbers, a generic data-name is displayed for each source field. The generic data-name is indicated by asterisks and consists of the DBD field name for the source field in the source segment.

Figure 4-55. Initial Insert of Segment with Generic Layout Using Secondary Indexing

```
KEY Specification - CW.DB.PORDRDD ------------------- SPECIFY KEY FOR INSERT
COMMAND ===>                                                 SCROLL ===> CUR
Segment to INSERT: ORDR040
-------Level Number/Data-name------- -Format- RO ---------Field Value----------
LVL  1  ORDR010 - SECONDARY SEQ               =
01  * ORDR010 KEY *
  03  * MATTYPE FIELD *              C   2  S    RM
  03  * RCODE FIELD *                C   2  S    BS
------------------------------------ -------- -- ------------------------------
LVL  2  ORDR040                               =
01  * ORDR040 SEGMENT *
  03  * KEY *                        C   8  K
  03  * MATTYPE FIELD *              C   2  S
  03  * DATA1 *                      C   4
  03  * RCODE FIELD *                C   2  S
  03  * DATA2 *                      C  24
*** END OF LAYOUT. LENGTH=    40 ***



Press Enter when the key value has been fully specified
Use END command to terminate Key Specification without processing the key
```

Figure 4-56. Specify New Keys for Segment with a Generic Layout

```
KEY Specification - CW.DB.PORDRDD ------------------- SPECIFY KEY FOR INSERT
COMMAND ===>                                                SCROLL ===> CUR
Segment to INSERT: ORDR040
-------Level Number/Data-name------- -Format- RO ---------Field Value----------
LVL  1  ORDR010 - SECONDARY SEQ               =
01  * ORDR010 KEY *
  03  * MATTYPE FIELD *              C   2  S    RM
  03  * RCODE FIELD *                C   2  S    BS
------------------------------------ -------- -- ------------------------------
LVL  2  ORDR040                               =
01  * ORDR040 SEGMENT *
  03  * KEY *                        C   8  K    SSSX0320
  03  * MATTYPE FIELD *              C   2  S    TR
  03  * DATA1 *                      C   4
  03  * RCODE FIELD *                C   2  S    OK
  03  * DATA2 *                      C  24
*** END OF LAYOUT. LENGTH=    40 ***



Press Enter when the key value has been fully specified
Use END command to terminate Key Specification without processing the key
```

Figure 4-57. Unformatted Screen with New Segment

```
EDIT --- CW.FISAMP.ORDER ---------------------------- SUCCESSFUL INSERT CMD
COMMAND ===>                                                SCROLL ===> CUR
PARENT   ORDR010
SEGMENT  ORDR040   CONCATENATED KEY: RMBS,SSSX0320
SEG LENGTH ===> 40
      ----+----1----+----2----+----3----+----4----+----5----+----6----+----7
    1 SSSX0320TR    OK
      EEEEFFFFED4444DD4444444444444444444444
      22270320390000620000000000000000000000000 ..... ..... ..... ..........
......................................................................
......................................................................
......................................................................
......................................................................
.....

ENTER FMT TO SWITCH TO FORMATTED MODE, CHAR TO SWITCH TO CHARACTER MODE
```

Secondary Index Special Considerations

A secondary index is used to provide an alternate entry point into a database. When you edit a database that has a secondary index associated with it, IMS automatically maintains the secondary index based on the changes you make.

You can edit a database that has a secondary index with File-AID for IMS. However, editing the index source segment is restricted if File-AID for IMS cannot confirm that the secondary index's key is guaranteed to be unique and the call that created the duplicate secondary index key cannot be backed out. This File-AID for IMS/ISPF restriction is provided to eliminate the possibility of an IMS 828 abend occurring during secondary index maintenance.

The following describes File-AID for IMS/ISPF's secondary index unique key validation that determines whether updating should be restricted:

- When the index source segment has a /SX system-related field defined, the secondary index's key is automatically unique.
- When the index source segment or any of its parents in the database you are editing is nonunique or non-keyed, File-AID for IMS/ISPF considers the secondary index's key unique only if a /SX system-related field is defined for the index source segment.
- When the index source segment in the database you are editing is the root segment, File-AID for IMS/ISPF considers the secondary index's key to be unique if the index's key fully contains the source segment's key. In other words, if the fields from the source (root) segment (/CK system-related fields and/or other fields) that make up the source segment's search and subsequence fields are taken in whole, they define every position in the source segment's key.
- When the /CK system-related field is used as follows for non-root source segments, File-AID for IMS/ISPF considers the secondary index's key to be unique in the following situations:
  - If one /CK field defines every position of the fully concatenated key to the source segment. If multiple /CK fields completely define the fully concatenated key, the secondary index's key fails validation.
  - If one /CK field defines every position of the concatenated key to the source segment's immediate parent but defines none or only part of the source segment's key, the remainder of the source segment's key must be defined by non-/CK fields. If the /CK field stops short of defining the concatenated key to the source segment's immediate parent, the secondary index's key fails validation.
- When the secondary index DBD's key is nonunique (that is, a secondary index overflow area is defined), the key must still pass the previously described validation.

When a secondary index's key fails validation, File-AID for IMS/ISPF allows editing of the index source segment only if the following criteria are true:

- Release 1.3 or greater of IMS is installed.
- The BKO (dynamic backout) parameter to DFSRRC00 is specified as Y in the installation process or in Option 0.3, IMS Parameters.
- IMS LOG DATASET USAGE is specified as AD or AK on the Data Base Specification screen (Option 2) or N is specified but the IMS log dataset is pre-allocated.

IMS backs out the call when a duplicate secondary index key is created and the above criteria are true.

When a secondary index key fails validation and any of the above criteria is false, File-AID for IMS/ISPF does not allow you to insert, repeat, or update in source segment occurrences. You cannot perform a REPEAT ALL on any parent of a nonunique source segment at any time. These restrictions do not apply to the other segment types in a database.

File-AID for IMS/ISPF supports shared secondary indexes the same as non-shared secondary indexes.

You can use File-AID for IMS/ISPF to browse, but not edit, the secondary index dataset as a separate database.

Sparse indexing is a feature of secondary indexing that, depending on your specifications, suppresses IMS's automatic secondary index maintenance. File-AID for IMS/ISPF does not restrict your use of sparse indexing in any way.

Audit Trail Feature

When using Option 2 of File-AID for IMS/ISPF to edit a database (for example, updating a production database or some other sensitive data), you can specify that an audit trail of your edit session is to be created.

To activate the audit trail feature, enter a Y in the Create Audit Trail field on the Data Base Specification screen. As you use the Formatted, Unformatted, and Character edit sub-options to update your database, all the update activity is captured into an audit trail.

Every time you use the INSERT or REPEAT primary command in the Formatted and Unformatted sub-options or the I (Insert), R (Repeat), and RA (Repeat All) line commands in the Character sub-option, images of the newly created segments are written to the audit trail.

Every time you use the DELETE primary command in the Formatted and Unformatted sub-options and the D (Delete) line command in the Character sub-option, images of the deleted segments are written to the audit trail dataset. Whenever you change the contents of existing segments by typing directly over the segments' contents, before and after images of the changed segments are written to the audit trail. File-AID for IMS/ISPF also records the number of times you enter the SAVE primary command.

Audit Trail Dataset Usage

File-AID for IMS/ISPF allocates the audit trail dataset at the beginning of your edit session.

If your TSO-PREFIX matches your TSO-ID, the audit trail dataset name is

```
tso-id.IXPAT.Dyymmdd.Thhmmss
```

where...	equals...
tso-id	Your TSO user ID, up to seven characters.
yymmdd	The Gregorian date on which the audit trail is created.
hhmmss	The hour, minute, and second the audit trail is created.

If your TSO-PREFIX does not match your TSO-ID, the audit trail dataset name is:

```
tso-prefix.tso-id.IXPAT.Dyymmdd.Thhmmss
```

where...	equals...
tso-prefix	Your TSO user PREFIX, up to seven characters.

System SMF Log File Usage

If an SMF identifier was specified at installation or by the security exit, the audit trail information is written to the system SMF log file.

Audit Trail Disposition

When you enter the END, RETURN, or a jump command to terminate your edit session, the Specify Disposition of Audit Trail screen is displayed as shown in Figure 4-58. This screen is not displayed if the audit trail was written to the SMF log file. This screen is used to decide what to do with the audit trail dataset just created during your edit session.

Figure 4-58. Specify Disposition of Audit Trail Screen

```
File-AID for IMS  --  Specify Disposition of Audit Trail  ---------------------
COMMAND ===>

    Audit trail disposition ===>      (PK = Print dataset and keep
                                       PD = Print dataset and delete
                                       D  = Delete dataset (without printing))

  Audit trail dataset ===> 'CW.FIAUDIT.D970315.T130054'
          Audit trail ===>
          Description ===>

Specify batch JCL information:
               Sysout class ===> *
               Print format ===> F    (F = Formatted; H = Hexadecimal)
  Print only changed fields ===> N    (Y = Yes; N = No)

  JOB statement information:
 ===> //XXXXXXX JOB (XXXXXXX),'FILE-AID AUDIT TRAIL',
 ===> //   MSGCLASS=A,NOTIFY=XXXXXXX
 ===> /*ROUTE  PRINT U1326
 ===> /*JOBPARM FORMS=LCAL
Enter END command to keep audit trail without printing
Enter JCL command to edit generated JCL
Press Enter to submit batch job
```

Audit Trail Disposition

Indicate whether the audit trail is to be printed and kept by a batch job (PK), printed and deleted (PD), or deleted without printing (D).

Audit Trail Dataset

Displays the dataset name of the audit trail just created in a protected field.

Audit Trail Description

Optionally, enter a description of the edit session you just completed. This description is written to the audit trail dataset and appears on the Audit Trail Report if you choose to have it generated. The field is 100 positions long.

Sysout Class

Specify the output class for the report.

Print Format

Specify whether you want the report printed in a formatted mode using segment layouts or in an unformatted, three-line hexadecimal mode.

Note: If you specified formatted for Print Format and N in the Use Layouts field on the Data Base Specification screen during the edit session, segment layouts are not available to File-AID for IMS for formatted printing. Therefore, the Audit Trail Report is printed in hexadecimal format.

Print Only Changed Fields

The information in this field affects how File-AID for IMS prints the before and after images of changed segments on the Audit Trail Report. If you enter Y, only the fields that you change are printed. If you enter N, all fields in changed segments are printed. However, the entry you make in this field has no affect on the printing of inserted, repeated, and deleted segment images.

Job Statement Information

Enter the JOB statement JCL for the batch print job submitted when you specify PK or PD for Audit Trail Disposition.

Terminating the Screen

Do one of the following to terminate the Audit Trail Disposition screen:

- Press Enter to generate the JCL, submit the print job for execution, and return to the Data Base Specification screen.
- Enter the JCL command to proceed to an ISPF/PDF Edit screen where you can edit the generated JCL before submitting it. Refer to "Editing the Generated JCL" on page 7-3.
- Enter the END, RETURN, or a jump command to keep the audit trail dataset for later printing.

If you enter the END, RETURN, or a jump command on the Audit Trail Disposition screen, you can print the audit trail at a later time by using Option 5.5, the Print Audit Trail sub-option. This screen and the Audit Trail Report are described in "Print Audit Trail Screen (Online Conversation)" on page 7-1.

Notes on the Audit Trail Feature

The audit trail dataset that File-AID for IMS/ISPF creates is a sequential, variable blocked file. Its LRECL and BLKSIZE are dependent on the sum of the lengths of the longest segment type and the maximum fully concatenated key contained in the primary database being edited. The sum of these lengths cannot exceed 32,724. For example, if you try to use the audit trail feature while editing a database that contains a segment type 30,000 characters long and the database's maximum fully concatenated key length is 3,000, an error is generated and you are not able to edit the database.

The amount of space allocated to the audit trail dataset by File-AID for IMS/ISPF is large enough so that you can usually complete your edit session without overflowing the audit trail dataset.

However, if you make a large number of changes during your edit session or if the segments in your database are very large, you could receive error message E345 AUDIT TRAIL DISCONTINUED. This message indicates that File-AID for IMS/ISPF is unable to continue writing to the audit trail dataset. At that point, you have the option to continue your edit session without an audit trail or terminate the session. When you do end your edit session, you still receive the Audit Trail Disposition screen, where you can choose what to do with the audit trail dataset.

When you edit a database that contains nonkeyed and/or nonunique segment types, the capturing of deleted segment images by the audit trail feature can be affected. When you use File-AID for IMS/ISPF to delete a parent segment that has dependent segments under it, File-AID for IMS issues a DL/I DLET call for the parent segment only. IMS automatically deletes all the dependent segments, in addition to the parent. Normally, File-AID for IMS/ISPF retrieves all the dependent segments and writes their images to the audit trail before the deletion of the parent actually occurs. This requires File-AID for IMS/ISPF to reestablish its current segment position in the database to the parent segment before deleting it.

When the parent to be deleted is nonkeyed or nonunique, File-AID for IMS/ISPF is unable to reposition on the parent before deleting it. Therefore, File-AID for IMS/ISPF does not retrieve the dependents and write their images to the audit trail before deleting the parent. The dependent segments are deleted when the parent is deleted, but their images do not appear on the Audit Trail Report. A message appears on the report with the deleted parent's image to notify you that dependent segments were deleted but are not shown.

Your installation has the capability to force the creation of an audit trail during your edit session through the File-AID for IMS/ISPF security exit routine. Therefore, you can enter N for Create Audit Trail on the Data Base Specification screen, but the security exit routine can override your specification. This means the Audit Trail Disposition screen can appear unexpectedly at the end of your edit session. However, the security exit routine can also force the printing of an audit trail at the end of your edit session. Therefore, you could receive an unexpected batch job submittal message at the end of your edit session without having seen the Audit Trail Disposition screen.

The security exit routine also has the capability to force the use of the system SMF log file to record the audit trail information.

The security exit routine also has the capability to override the default syntax File-AID for IMS/ISPF uses when constructing the audit trail dataset name (the syntax is described on page 4-75). Therefore, when the Audit Trail Disposition screen is displayed, you can see an audit trail dataset name that does not coincide with the syntax described.

If you require information on how your installation may be using a security exit routine to force File-AID for IMS/ISPF to create and/or print an audit trail or supplying the audit trail dataset name, contact the person responsible for File-AID for IMS/ISPF at your installation.

Optional IMS Functions

IMS provides a number of optional functions that you can use with your databases. Some of these optional functions impact File-AID for IMS's browse/edit processing. This section describes the affect of these optional functions on certain File-AID for IMS/ISPF screens and commands.

Most of the IMS optional functions referred to in this section are described in the *IMS/ESA Administration Guide: DB*. You should refer to this guide if you require information about when to use an optional function or how it works. This section describes only special File-AID for IMS/ISPF processing associated with certain IMS optional functions.

Logical Relationships

You can use File-AID for IMS to browse databases that are involved in any of the three types of logical relationships— unidirectional, bidirectional physically paired, or bidirectional virtually paired— including databases that contain recursive structures. There are no File-AID for IMS restrictions that affect browsing databases with logical relationships.

You can use File-AID for IMS to edit databases that are involved in any of the three types of logical relationships, including databases that contain recursive structures, based on the File-AID for IMS restrictions described in the following paragraphs. File-AID for IMS supports the editing of databases with logical relationships through physical DBDs or logical DBDs. When you want to edit a logical child segment, Compuware recommends that you use a logical DBD where the logical child has been defined as part of a concatenated segment. This process minimizes the impact of the insert, delete, and replace rule restrictions on logical children.

Virtual Logical Child Segments

When a bidirectional virtually paired logical relationship is implemented, a physical DBD is generated to define the physical hierarchy for the database containing the logical parent segment type. As part of that physical DBD, a segment definition is included for the virtual logical child segment type. When you use this physical DBD to access the database, File-AID for IMS includes the virtual logical child segment type when it displays the segment types in the database (for example, on the Data Base Location screen or the Character screen).

Because the virtual logical child is actually representing a real logical child segment type, you can access and maintain real logical child segments through the corresponding virtual logical child segments when using the logical parent's physical DBD. The restrictions you can encounter when editing real logical child data through the logical parent's physical DBD are described throughout the remainder of this section.

When you access real logical child segments from the logical parent's viewpoint (through a physical DBD), the order in which the real logical children are seen is determined by the key defined for the virtual logical child segment type. When you access concatenated segments from the logical parent's viewpoint (through a logical DBD), the order in which the concatenated segments are seen is also determined by the virtual logical child's key. The key for a virtual logical child can be made up of multiple, non-contiguous pieces of data. On any screen within File-AID for IMS where the key values of segments are shown, the key value for a virtual logical child that is made up of multiple pieces of data is shown as one continuous key value.

For example, assume that the key to a virtual logical child consists of the data in positions 3 through 6, 25 through 27, and 11 through 15, respectively. File-AID for IMS collects the data from the different locations in the segment and places it into one, 12-position key field to display the key value for this segment. The order in which multiple pieces of key data are displayed in a key field is determined by the order of the sequence FIELD statements for the virtual logical child in the DBD source code.

Insert, Delete, and Replace Rules

When you insert, delete, or replace logical child segments and their physical or logical parents, IMS validates your actions based on the segments' RULES= operand in the physical DBDs that define the logical relationship. The RULES= coding format and validation process is explained in the *IMS/ESA Administration Guide: DB*.

Because File-AID for IMS maintains your databases through DL/I calls, IMS performs the update rules validation process for File-AID for IMS exactly as for any application program. When inserting a segment that is involved in a logical relationship, the insert rule coded for the destination parent segment (either a physical or logical parent) determines the validation that IMS performs.

For example, you can insert a logical child segment only if the insert does not violate the destination parent's insert rule. To prevent IMS from performing unintentional operations during editing, File-AID for IMS applies additional restrictions during the insertion of logical children and destination parents as described in the following table:

Table 4-1. Destination Parent's Insert Rule File-AID for IMS Restrictions

Rule	Restrictions	Other Remarks
P	None.	IMS requires that the destination parent be inserted through a physical path before any logical children may be connected to it.
L	A logical child may be inserted only when it is part of a concatenated segment.	File-AID for IMS provides this restriction because IMS inserts the destination parent if one does not already exist. Because the user does not have a view of the destination parent segment contents, this operation is prohibited.

Table 4-1. Destination Parent's Insert Rule File-AID for IMS Restrictions

Rule	Restrictions	Other Remarks
V	Same as above.	When connecting a logical child to an existing destination parent by inserting a concatenated segment with the INSERT command, the existing destination parent's non-key data is overlaid by the zeroes/blanks from File-AID for IMS's initialized I/O area. File-AID for IMS issues a warning message before this happens. To avoid this problem, use the REPEAT command with the concatenated segment.

When deleting a segment that is part of a logical relationship, the delete rule validation process described in the *IMS/ESA Administration Guide: DB* takes place. File-AID for IMS does not place any additional restrictions on the deletion of logically related segments.

When you make changes to an existing database segment that is part of a logical relationship, File-AID for IMS issues a DL/I REPL call to update the database. The replace rule validation process described in the *IMS/ESA Administration Guide: DB* takes place. File-AID for IMS does not place any additional restrictions on the replacement of logically related segments.

Key Specification Screen

When the target of an INSERT or REPEAT command is a logical child or concatenated segment, you must specify up to three key values on the Key Specification screen for the target segment:

- You must specify the Destination Parent Concatenated Key (DPCK)of the logical parent that the logical child you are creating is to be connected to.
- You must specify the key value for the logical child or concatenated segment you are creating. When you work with a bidirectional virtually paired or a bidirectional physically paired logical relationship, a logical child segment is created through the physical path (from the physical parent's viewpoint) or the logical path (from the logical parent's viewpoint). Because a logical child segment type is defined in each path, each has its own defined key field. The relative starting position and length of the key in one path may not match the relative starting position and length of the key in the other path.
- When you create a logical child segment where the two key definitions do not match, File-AID for IMS provides a key value entry field where you must specify the alternate path logical child key. When the alternate path logical child key is defined within the Destination Parent Concatenated Key of the segment being created, File-AID for IMS does not provide a separate key value entry field.

Key-Only Segments

When defining a logical DBD, you can specify whether an application program has KEY or DATA sensitivity to each segment type through the SOURCE= keyword on the SEGM statement. When you edit a database through a logical DBD, the following File-AID for IMS restrictions apply to key-only segments:

- If the logical DBD used contains any non-concatenated segments that are key-only or any concatenated segments where both the logical child and the destination parent are key-only, File-AID for IMS prevents you from entering the edit mode. This process helps to avoid problems that might occur with the REPEAT ALL command or when establishing position in a database.
- If either the logical child or the destination parent portions of a concatenated segment are key-only, the INSERT and REPEAT commands are not allowed with the concatenated segment. Because File-AID for IMS does not have DATA sensitivity to both portions of the concatenated segment, a successful DL/I ISRT call cannot be made.

- When the logical DBD you used defines a logical relationship from the physical parent's viewpoint and either the logical child or destination parent portions of the concatenated segment are key-only, you cannot use the REPEAT ALL command on any segment in the hierarchical path above the concatenated segment. As with previous restriction, a successful DL/I ISRT call cannot be made without DATA sensitivity to both portions of the concatenated segment.

When browsing a database using a logical DBD that has a key-only segment, you may encounter one of following situations:

- When positioned on a key-only segment while in Formatted or Unformatted mode, the informational message "KEY-ONLY SPECIFIED" and a blank screen body are displayed.
- When positioned on a key-only segment while in Unformatted mode, a segment length that is zero and the literal ** KEY-ONLY ** is displayed next to the length.
- When the NEXT primary command is used in Formatted or Unformatted mode to navigate in a hierarchically sequential manner through a database (using the NEXT command without a SEGMENT-NAME operand), a key-only segment occurrence is skipped over by IMS and the next data-sensitive segment occurrence retrieved.
- When Character mode is switched to/from Formatted or Unformatted mode while positioned on a key-only segment, the first segment line on the Character screen contains a literal KEY-ONLY - NO DATA.
- When another segment occurrence becomes the current segment (that is, the key-only segment is no longer the first segment line), the KEY-ONLY - NO DATA segment line no longer appears on the screen.
- When in Character mode, a screen filled with a hierarchically sequential listing of the segments following the current segment in a database is displayed. Because IMS skips over key-only segments when processing an unqualified GN DL/I call, key-only segments do not appear on the Character screen (except as described in the previous situation).

Repeat Command

When editing a database that contains a logical relationship, you can use the REPEAT command to create single occurrences of any of the defined segment types. When you want to repeat substructures within a logically related database by adding the ALL operand to the REPEAT command, the following File-AID for IMS restrictions apply depending on the DBD you use:

- When you're editing through a physical DBD that defines the logical relationship from the logical parent's viewpoint and the substructure to be repeated contains the logical parent segment, the logical child segment under the logical parent is not repeated. If a logical DBD defines the logical relationship from the logical parent's viewpoint and the substructure to be repeated contains the concatenated segment, neither the concatenated segment nor any of its dependents are repeated.
- When you're editing through a physical DBD that defines a logical relationship from the physical parent's viewpoint, most substructures can be repeated (refer to the next bullet). If a logical DBD defines the logical relationship from the physical parent's viewpoint and the substructure to be repeated contains the concatenated segment, the concatenated segment and its physical dependents are repeated. Logical dependents to the concatenated segment are not repeated. When editing through a physical or logical DBD as described in the previous bullet, an additional restriction exists.
- When you're editing from the physical parent's viewpoint and the logical child segment defined under the logical parent has a unique key, REPEAT ALL is not allowed on the physical parent or any segment above it in the current hierarchical path.

Nonkeyed and Nonunique Segments

When a segment type is defined in a DBD without a sequence or key field, the segment is considered nonkeyed by File-AID for IMS. When a segment type defined as having a key field with duplicate key values allowed in occurrences of the segment, it is considered nonunique by File-AID for IMS.

File-AID for IMS and IMS have several restrictions that apply when you browse or edit databases that contain nonkeyed and/or nonunique segments. The restrictions are intended to prevent data corruption when database navigation produces ambiguous or unpredictable results.

- The following restrictions apply when your current segment position is on a nonkeyed or nonunique segment, or subordinate of a nonkeyed or nonunique segment:
  - The ALL operand cannot be used with the REPEAT command.
  - The PARENT command cannot be used to position to a nonkeyed or nonunique segment.
  - The RECOVERY command is not supported, if the root segment of the database is nonunique.
  - When the INSERT or REPEAT command is used to create a nonkeyed or nonunique segment, database position is changed to the first parent with a unique concatenated key and the message POSITION CHANGED is displayed.
  - You can receive informational messages “I902”, “I905”, “I905A”,“I906”,“I906A”, or “I906B” as you navigate within a database. Refer to the File-AID for IMS *Messages and Codes Manual* for explanations of these messages.
- The following restrictions apply when processing the CHILD command:
  - When a segment to be retrieved using the CHILD command is nonkeyed or nonunique, or subordinate to a nonkeyed or nonunique segment, the FIRST, LAST, or MAX operands are only supported for DL/I processing with a disposition of OLD.
  - When a CHILD command fails to retrieve a segment that is a child of the current segment:
    - Your original database position does not change, if your current segment position is on a key unique segment.
    - You are positioned at the next segment in the database hierarchy and the message POSITION CHANGED is displayed, if your original database position is on or subordinate to a nonkeyed or nonunique segment, and you are using BMP or DL/I processing with a disposition of SHR.
    - Your database position remains at the requested child’s level and the message POSITIONED BEYOND TWINS is displayed, if your original database position is on or subordinate to a nonkeyed or nonunique segment, and you are using DL/I processing with a disposition of OLD. A blank screen body displays in this situation.
- The following restrictions apply when processing the TWIN command:
  - When a segment to be retrieved using the TWIN command is nonkeyed or nonunique, or subordinate to a nonkeyed or nonunique segment, the FIRST, LAST, or MAX operands are only supported for DL/I processing with a disposition of OLD.
  - When a TWIN command fails to retrieve a twin under the current parent segment:
    - Your current segment position does not change, if your original database position is on a key unique segment.

- You are positioned at the next segment in the database hierarchy and the message POSITION CHANGED is displayed, if your current segment position is on a nonkeyed or nonunique segment, and you are using BMP or DL/I processing with a disposition of SHR.
- You remain positioned at the twin level and the message POSITIONED BEYOND TWINS is displayed, if your current segment position is on a nonkeyed or nonunique segment, and you are using DL/I processing with a disposition of OLD. A blank screen body displays in this situation.

Special care must be taken when executing the GOB, GOF, GOH/GOT, GOL, or GOM commands with databases that contain nonkeyed or nonunique segments. These commands are intended to provide a means to position to a previously displayed database segment. As long as these positions are associated with segments that have unique concatenated keys, the segment returned by the command will be accurate.

When a nonkeyed or nonunique segment, or a segment subordinate to a nonkeyed or nonunique segment is the target of one of above commands, File-AID for IMS verifies the segment type returned by the command, as follows:

- If the segment type is the same as that which was originally displayed, the message SEGMENT MAY CHANGE is displayed. The message is a reminder to notify you that insertion or deletion of segments in the path of the target segment may result in retrieval of a segment that is different from the originally displayed segment.
- If the segment type differs from that which was originally displayed, an error message is displayed.

Variable Length Segments

File-AID for IMS enables you to browse/edit variable length segments the same as fixed length segments, with the following differences:

- In Formatted mode:
  - When you browse/edit a variable length segment, the first two bytes of data shown are always the contents of the Segment Size field. The segment layout you use for the segment must include the Segment Size field.

    When in edit mode, you can change the length of the segment by typing directly over the Segment Size field. If you attempt to shorten or lengthen the segment beyond its defined minimum or maximum length, an error is returned. The long message for the error indicates the allowable minimum or maximum length.
  - When the variable length segment you're browsing/editing is a logical child or concatenated segment, the segment's appearance depends on what you specified for the segment in the Segment/Layout XREF function. If you specified that the segment layout for the logical child contains the logical child's Destination Parent Concatenated Key (DPCK), the layout also contains two bytes for the Segment Size field (immediately before the DPCK). If the layout you provide does not include the Segment Size field, the Size field is associated and displayed with the first two positions of the DPCK. This process also causes the remaining data fields in the segment to be misaligned with the data-names.

    Conversely, if the segment/layout XREF specifies that the segment layout for the logical child or concatenated segment does not contain the logical child's DPCK, File-AID for IMS generates both the two-byte Size field and the DPCK.
  - When the variable length segment you're browsing/editing is a concatenated segment, you can be restricted. If the logical child portion of the concatenated segment is variable length, you cannot browse or edit the segment in this mode. This limitation applies regardless of whether the destination parent portion of the concatenated segment is fixed or variable in length. You can avoid this restriction by making the logical child portion of the segment key-only (allowing you to browse/edit the destination parent portion) or the destination parent

portion of the segment key-only (allowing you to browse/edit the logical child portion).

You can browse/edit a concatenated segment with a fixed length logical child and variable length destination parent without restriction.

- In Unformatted mode:
  - There are no restrictions affecting the browsing/editing of any variable length segment.
  - The segment-length line displays the segment's current length, minimum defined length, and maximum defined length. For a concatenated segment, the current, minimum, and maximum lengths are displayed for both the logical child and the destination parent.
  - When editing a variable length segment, you can change the segment's current length by either typing over the segment length displayed on the segment-length line or typing over the two-byte Segment Size field displayed as part of the segment contents. If you type over both, the value in the two-byte Segment Size field overrides the value on the segment length line. After your next keyboard interaction, the segment is expanded/contracted. When you edit a concatenated segment with a variable length logical child and destination parent, you can change their lengths independently of each other.
- In Character mode:
  - You can increase the length of a variable length segment by typing data past the current end of the segment. Deleting data from the end of a segment does not decrease its length.
  - You cannot increase the length of a concatenated segment, regardless of whether the logical child, destination parent, or both are variable length.
  - You should not type over the two-byte Segment Size field.

Segment Edit/Compression Facility

If you use a DBD that invokes a segment edit/compression facility routine, File-AID for IMS places no restrictions on the use of the routine.

Chapter 5. Utilities

Option 3, Utilities, is used to invoke the IMS Utility, which is used to initialize newly-allocated databases. All logically related databases, secondary indexes, and secondary dataset groups are also initialized. All required IMS load utilities are automatically executed.

The initialization process consists of an online conversation and a batch job stream. The online screens prompt you for the parameters required to submit the batch job to do the actual initialization.

If you do not specify a sub-option on the Primary Option Menu, the Utility Selection Menu is displayed, as shown in Figure 5-1. If you specify a sub-option, this screen is skipped.

Figure 5-1. Utility Selection Menu Screen

```
File-AID for IMS  --------  Utility Selection Menu  ---------------------------
OPTION  ===>

ENV: DEV1 - DEVELOPMENT ENVIRONMENT WITH CONCATENATIONS


 1 Initialize Data Base   Initialize data base utility:
                           Initializes a data base and all related data bases
```

Enter 1 in the Option field, and press Enter. The Initialize Data Base - Data Base Specification screen is displayed as shown in Figure 5-3 on page 5-3. Enter the END or RETURN primary command or a jump command to exit the Utilities option.

Initialize Data Base Utility (Online Conversation)

The online conversation consists of a sequence of screens where you do the following:

- Specify the DBD for the database to be initialized, and specify the ACBLIB if it is a DEDB database.
- Specify the dataset names for the database to be initialized.
- Specify batch JCL information.

- Optionally, edit the JCL generated by File-AID for IMS/ISPF to perform the initialization.
- Submit the batch job.

The batch job consists of three to eight steps for full function databases, depending on whether secondary indexes and/or logical relationships are present, and one step for DEDB databases. Following are the main steps of the batch job for full function databases:

1. Inserting a dummy root segment into each database.
2. Deleting the dummy root segments.
3. Writing a report that summarizes the results of the initialization.

The batch job for DEDB databases consists of the standard IMS DEDB initialize utility.

Initialize Database - Database Specification

The Initialize Data Base - Data Base Specification screen, shown in Figure 5-2, is the first screen displayed upon entry to the Initialize function. This screen is used to specify the name of the DBD that describes the database to be initialized, the name of the DBD load library where that DBD resides, and the ACBLIB where the DBD resides if the database is a DEDB. The DBD must describe a physical database. Logical, index, HSAM, SHSAM, and MSDB databases are not supported in the Initialize function.

Figure 5-2. Initialize Data Base - Data Base Specification Screen

```
File-AID for IMS  --  Initialize Data Base - Data Base Specification ----------
COMMAND ===>
ENV: DEV1 - DEVELOPMENT ENVIRONMENT WITH CONCATENATIONS

Specify the DBD for the data base to be initialized:

         + DBDLIB Dataset 1  . . 'TSOUSER4.FISAMP.DBDLIB'
                  Dataset 2  . .
                     Member  . .            (Blank or pattern for member list)


Specify the ACBLIB to initialize a DEDB data base:

             ACBLIB Dataset  . .
```

Note: The presence of a highlighted plus (+) or minus (-) sign indicates dataset concatenations. Refer to “Dataset Concatenation Support” on page 3-1 for additional information.

DBDLIB Dataset 1 and Dataset 2

Enter one or two DBD load library dataset names. If you enter one DBD load library name, you can enter it on either of the dataset name lines. If you enter two DBD load library names and their blocksizes are different, you must enter the library with the larger blocksize on the first dataset name line.

Member

Enter the DBD member name. If you enter two DBD library names, File-AID for IMS/ISPF searches the first before the second to locate the DBD member.

Terminating the Screen

Do one of the following to terminate the Initialize Data Base - Data Base Specification screen:

- Press Enter to proceed to the Data Base Dataset Specification screen.

  If you leave the DBD Member field blank, the DBD Member List screen is displayed next. If two DBD libraries are concatenated, the member list is a merged and sorted list of the members in both datasets. You can then select the DBD member from the member list.

- Enter the END or RETURN primary command or a jump command to terminate the initialization process.

Initialize Data Base Dataset Specification

The Data Base Dataset Specification screen, shown in Figure 5-3, is used to specify the dataset names for the database you want to initialize. The database must be uninitialized, and its datasets must be empty.

Figure 5-3. INITIALIZE - Data Base Dataset Specification Screen

```
------ INITIALIZE    Data Base Dataset Specification (DBD-PORDR   )- LINE 00001
COMMAND ===>                                                  SCROLL ===> CSR

Obtain DB Dataset Names from ===>  P  (P = Previously used with 'P' here,     S
                                       I = IMS dynamic allocation source)     H
                                                                              R
DBRC not active                                                            D
                                                                           I  L
                                                                           S  E
DBD      DDNAME   DATASET NAME                                   PASSWORD  P  V
-------- -------- ---------------------------------------------- -------- --- -
PORDR    PORDRDD  FISAMP.ORDER                                            OLD N
PCUST    PCUSTDD  FISAMP.CUSTOMER                                         OLD N
              *** END OF DATA BASE DATASET NAMES   ***









Press ENTER when data base datasets have been fully designated
Use END command to end Initialize Data Base Dataset Specification
```

Obtain DB Dataset Names from (lines 3 – 6)

The dataset name field is initially set from the name you previously used for the dataset with **P** specified. If you specify **I**, the dataset name is set from the IMS dynamic allocation source. The IMS dynamic allocation source is the dynamic allocation member in DFSRESLB DD or DBRC for the IMS 7.1 HALDB databases.

If File-AID for IMS cannot retrieve the dataset name, the message NO MDA MEMBER FOR DBD is displayed in the DATASET NAME field.

The heading lines also indicate whether DBRC is in use and if used, the name of the RECON1 dataset and from where the RECON1 dataset name was obtained.

DBD

Displays the name of the primary DBD you entered on the Data Base Specification screen.

DDNAME

Displays the DD name of the first dataset group in the primary DBD.

Dataset Name

Enter the database dataset name to be allocated to the DD name.

There are two conventions to enter a database dataset name. If you enter every node in the dataset name, the name must be enclosed in apostrophes. If the first node of the dataset matches your TSO ID, you can omit the first node and the apostrophes.

When a dataset name has a node identical to the ddname of the dataset, you can substitute an asterisk for that node. If a dataset name has more than one node equal to the DD name, you can substitute an asterisk for only one of the nodes.

A separate line is displayed for each additional dataset group in the primary DBD. The DBD column is blank and the DDNAME column displays the ddname for the dataset group. Each line also has the database Dataset Name and Password fields.

Any external DBDs that are directly referenced by the primary DBD (such as a secondary index DBD or a logically related DBD) are shown sequentially under the primary DBD with their ddnames, Dataset Names, and Password fields. There can also be DBDs and ddnames listed that are not directly referenced by the primary DBD. These are from DBDs that are indirectly related to the primary DBD through the primary's external references. You must enter database dataset names for all listed DD names.

Once you enter a database dataset name on the Data Base Dataset Specification screen, that dataset name is retained from session to session (refer to "User Profile Dataset" on page 3-6). If you entered **I** in the Obtain DB Dataset Names from field, the dataset names are retained only if no dataset names exist in the user profile dataset for the associated database ddnames. In subsequent sessions, File-AID for IMS/ISPF pre-formats those dataset name fields where it has saved names.

Password

Enter the password if the database dataset is OS password-protected. The password for an OS password-protected dataset is not saved across sessions.

DISP

This field displays the disposition to be used when the dataset is allocated. For File-AID for IMS functions that do not update the dataset such as browse and extract, the datasets are allocated with a disposition of SHR. Functions that update such as edit and load cause the dataset to be allocated OLD unless the dataaset name is the name registered in DBRC.

SHR LEV

This field displays the the DBRC-registered share level of the dataset. N indicates that the DBRC-registered level is not being used.

Terminating the the Screen

Do one of the following to terminate the Data Base Dataset Specification screen:

- Press Enter to move forward in the initialize conversation. The Initialize Data Base - JCL Specification screen (page 5-7) is displayed. Any dataset names you entered are saved.
- If you want to return to the beginning of the initialize conversation, enter the END command. You are returned to the Data Base - Data Base Specification screen. Any dataset names you entered are saved.

- If you want to terminate the initialize conversation, enter the RETURN command. Any dataset names you entered are saved, and you are returned to the Primary Option Menu.
- When you press Enter or scroll the display, the datasets shown on the screen are allocated. Once allocated, the name cannot be updated on the screen. To change the name after it is allocated, return to the prior screen and start over. Changing the Obtain DB Dataset Names from field causes the allocated datasets to be unallocated.

Data Base Initialize Image Copy Specification

The Data Base Initialize Image Copy Specification screen is displayed as shown in Figure 5-4 on page 5-5, following an Initialize function, if IMS requires that any of the database datasets require an Image Copy before being used. IMS requires that all HALDB data sets be image copied following an Initialize. IMS 7.1 also requires that non-HALDB datasets be image copied following an Initialize.

Figure 5-4. Data Base Initialize Image Copy Specification Screen

```
File-AID for IMS - - Data Base Initialize - - Image Copy Specification - -
COMMAND ===>

This data base Load JOB is using datasets registered in DBRC.

IMS requires that an Image Copy of xx of these datasets be
preformed before they can be used.

Enter Y below to have this Load JOB include a step to perform the
Image Copy.


            Perform Image Copy   . . Y       (Y= Yes; N= No)


  High Level Image Copy DSN node . . PLGSXK0
```

Perform Image Copy

Performing the Image Copy is optional. Enter Y to perform the Image Copy as part of the load JOB and N if you do not want File-AID for IMS to perform the Image Copy as part of the Load JOB.

High Level Image Copy DSN node

You can specify the High Level node of the Image Copy data sets. The default is your user ID. For very large datasets, you may want to save and edit the JCL, modifying the space allocation for the Image Copy datasets.

If all of the datasets that would normally required an Image Copy are registered as not recoverable, then an Image Copy is not required. Therefore, the Data Base Load Image Copy Specification screen is not displayed.

However, File-AID for IMS cannot perform the Image Copy if any of the datasets that require an Image Copy are registered in DBRC using the REUSE option. DBRC GENJCL must be used to perform the Image Copy because DBRC needs to determine which Image Copy dataset to use.

If any of the datasets registered with REUSE is a non-HALDB dataset, the following screen is displayed.

Figure 5-5. Data Base Initialize Image Copy Specification (Informational) Screen

```
File-AID for IMS - - Data Base Initialize - - Image Copy Specification - -
COMMAND ===>

This data base Load JOB is using datasets registered in DBRC.

IMS requires that an Image Copy of 1 of these datasets be
preformed before they can be used.

One or more of these datasets is using the DBRC Image Copy option of
Reusable.  Only DBRC GENJCL can be used to perform the Image Copy when
the DBRC Reusable option is used.

This JOB will not include a step to perform the Image Copy.  It will
be necessary for you to edit the JCL generated by this JOB into two
JOBs.  The first JOB should include the steps up to the delete step.
The delete step needs to be a separate JOB.  The DBRC Image Copy must
be executed after the first JOB and before the second JOB.
```

Note: Refer to "Editing the Generated JCL" on page 6-18 for more information on the Load utility.

If all of the datasets registered with REUSE are HALDB datasets, the following screen is displayed instead.

Figure 5-6. Data Base Initialize Image Copy Specification (Informational) Screen

```
File-AID for IMS - - Data Base Initialize - - Image Copy Specification - -
COMMAND ===>

This data base Load JOB is using datasets registered in DBRC.

IMS requires that an Image Copy of xx of these datasets be
preformed before they can be used.

One or more of these datasets is using the DBRC Image Copy option of
Reusable.  Only DBRC GENJCL can be used to perform the Image Copy when
the DBRC Reusable option is used.

This JOB will not include a step to perform the Image Copy.  It will
be necessary for you to perform the Image Copy using DBRC GENJCL before
the database can be used.
```

Initialize Data Base - JCL Specification Screen

The Initialize Data Base - JCL Specification screen, shown in Figure 5-7 on page 5-7, is used to specify the initialization job JCL information. This screen is displayed after the Data Base Dataset Specification screen.

Figure 5-7. Initialize Data Base - JCL Specification Screen

```
File-AID for IMS  ----  Initialize Data Base - JCL Specification  -------------
COMMAND ===>

Specify batch JCL information:
               Sysout class ===> *

  JOB statement information:
 ===> //CW77XW JOB (ACCT,287100,CWX,CW),'FILE-AID/IMS',
 ===> //   MSGCLASS=A,NOTIFY=CW77,REGION=2048K
 ===> /*ROUTE  PRINT U1326
 ===> /*JOBPARM FORMS=LCAL









Press Enter to submit batch job         Enter JCL command to edit generated JCL
```

Enter the SYSOUT class for the initialization report, the JOB statement information, and other related JCL statements (for example, /*JOBPARM and /*ROUTE statements).

File-AID for IMS/ISPF automatically allocates an IMS log dataset that is deleted after the successful completion of the initialize job or cataloged if the job ends abnormally. Additional information on the IMS log dataset and its usage is provided in "IEFRDER DD" on page 3-9.

Terminating the Screen

Do one of the following to terminate the Initialize Data Base - JCL Specification screen:

- Press Enter to generate the JCL, submit the initialize job for execution, and return to the INITIALIZE Data Base - Data Base Specification screen.
- Enter the JCL primary command to advance to an ISPF/PDF Edit screen where you can edit the generated JCL before submitting the job.
- Enter the END command to return to the INITIALIZE Data Base - Data Base Specification screen without submitting the initialization job
- Enter the RETURN command to return to the Primary Option Menu without submitting the initialization job.

Editing the Generated JCL

If you entered the JCL command on the Initialize Data Base - JCL Specification screen, an ISPF/PDF Edit screen similar to the one shown in Figure 5-8 is displayed.

Figure 5-8. ISPF/PDF Edit Screen

```
EDIT ---- CW.SPFTEMP1.CNTL ------------------------------------- COLUMNS 001 072
COMMAND ===>                                                     SCROLL ===>
****** ****************************** TOP OF DATA ****************************
000001 //CW77XW JOB (ACCT,287100,CWX,CW),'FILE-AID/IMS',
000002 //   MSGCLASS=A,NOTIFY=CW77,REGION=2048K
000003 /*ROUTE  PRINT U1326
000004 /*JOBPARM FORMS=LCAL
=NOTE= YOU ARE NOW EDITING THE JCL THAT FILE-AID HAS GENERATED TO PERFORM
=NOTE= THE REQUIRED FUNCTION.  YOU CAN CHANGE THIS JCL IF DESIRED, AND USE
=NOTE= THE SUBMIT PRIMARY COMMAND TO SUBMIT THE JOB.  TO KEEP THIS JCL FOR
=NOTE= FUTURE USE, USE THE CREATE OR REPLACE PRIMARY COMMAND.  ENTER THE
=NOTE= END COMMAND TO EXIT THE FUNCTION WITHOUT SUBMITTING THE JOB.
000005 //*-----------------------------------------------------------------*
000006 //* DATA BASE PREREORGANIZATION:                                    *
000007 //*   THIS STEP EXECUTES THE IMS PREREORG UTILITY TO SET UP         *
000008 //*   THE PREREORG DATASET FOR LOGICAL AND INDEX DATA BASE          *
000009 //*   DATASETS.                                                     *
000010 //*-----------------------------------------------------------------*
000011 //PREREORG EXEC PGM=DFSRRC00,
000012 //            COND=(0,LT),
000013 //            PARM='ULU,DFSURPR0'
000014 //STEPLIB  DD DSN=IMSVS.RESLIB,
000015 //            DISP=SHR
000016 //DFSRESLB DD DSN=IMSVS.RESLIB,
```

At this point, the ISPF/PDF editor has been invoked on the temporary dataset that contains the JCL generated to perform the initialization. All ISPF edit commands are available for use. For example, to insert additional JCL statements, use the I (Insert) line command. To change the JCL, type over the data. To delete a line, use the D line command. You can use the CREATE and REPLACE primary commands to save the generated JCL into a partitioned (PDS) or sequential dataset, which enables you to submit the JCL in the future without using the online conversation screens.

Do the following after you view or edit the JCL:

- Enter the SUBMIT command to submit the initialization job for execution. The Data Base Initialization Report (page 5-15) is generated.
- Enter the END or CANCEL command to return to the INITIALIZE Data Base - Data Base Specification screen.

Initialize Database Utility (Batch Stream)

The JCL on the following pages can be coded and submitted to execute the initialize process without invoking the online conversation. The JCL for the IBM utilities is omitted. Required parameter information and DD statements are described following the JCL. To simplify the coding of this JCL, refer to “Editing the Generated JCL” on page 5-7.

The JCL to initialize a DEDB consists of the execution of the IMS utility DBFUMIN0 and, therefore, is not shown. Statistical reports, other than the utility’s reports, are not generated.

Note: JCL for RECON datasets is not shown. If your installation uses DBRC without dynamic allocation of the RECON datasets, RECON DSNs must be specified in the File-AID for IMS option 0.3, IMS Parameters.

The batch JOB consists of a maximum of nine steps. The number of steps is determined by whether the data base is a HALDB data base and if not a HALDB database, whether logical relationships and/or secondary indexes are present. Three of these steps execute File-AID for IMS/ISPF. The other six steps execute IMS utilities. These utilities resolve logical relationships and second indexes and take an image copy.

1. PREREORG - IBM Data Base Prereorganization Utility (DFSURPR)
   This step executes the prereorganization utility. It determines what will be required regarding logical relationships and secondary indexes and initializes HALDB datasets as empty.
2. DBINIT - Data Base Initialization (IXPINTDV)
   This step inserts a dummy database root segment into each database. It is not required for a HALDB database.
3. PRFXRESL - IBM Data Base Prefix Resolution Utility (DFSURG10)
   This step processes the logical relationship and secondary index records generated by the DBINIT step. It is not required for a HALDB database..
4. HISMUNLD - IBM HISAM Reorganization Unload Utility (DFSURUL0)
   This step processes secondary index information created in Step 3. It is required only if secondary indexes are present for non-HALDB databases.
5. HISMRELD - IBM HISAM Reorganization Reload Utility (DFSURRL0)
   This step processes secondary index information created in Step 4. It is required only if secondary indexes are present for non-HALDB databases.
6. PRFXUPDT - IBM Data Base Prefix Update Utility (DFSURGP0)
   This step updates the prefix of segments whose prefix information was affected by the database initialization. It is required only if logical relationships are present for non-HALDB databases.
7. IMAGECOP - Data Base Image Copy (DFSUDMP0)
   If DBRC requires that some of the data base datasets require an image copy and the option to include the image copy was chosen, this step is included to take all required image copies.
8. DBDELETE - Data Base Delete (IXPINTDV)
   This step deletes the dummy database root segment inserted into each database during Step 2. It is not required for a HALDB database.
9. RPTSTATS - Data Base Initialization Summary Reporting (IXPRPTDV)
   This step produces the Data Base Initialization Report.

For more information on the IBM utilities described here, refer to the *IMS/ESA Administration Guide: DB* and the *IMS/ESA Utilities Reference Manual*.

Figure 5-9. JCL to Execute Initialize Batch Job, Part 1

```
//*******************************************************************
//* DATA BASE PRE-REORGANIZATION:
//*     THIS STEP EXECUTES THE IMS PRE-REORG UTILITY TO SET UP THE    *
//*     PRE-REORG DATASET FOR LOGICAL AND INDEX DATA BASE DATASETS.   *
//*******************************************************************
//PREREORG EXEC  PGM=DFSRRC00,
//               COND=(0,LT),
//               PARM=(ULU,DFSURPR0)
.
. JCL not shown for this step
.
//*******************************************************************
//*DATA BASE INIT:
//*     THIS STEP INSERTS A DUMMY DATA BASE SEGMENT IN THE EMPTY      *
//*     UNINITIALIZED DATA BASE(S).                                   *
//*******************************************************************
//DBINIT   EXEC PGM=IXPINTDV,
//              COND=(4,LT,),
//              PARM='parameter information'
//STEPLIB  DD   DSN=ims-reslib-dataset-name,
//              DISP=SHR
//         DD   DSN=File-AID-load-lib,
//              DISP=SHR
//DFSRESLB DD   DSN=ims-reslib-dataset-name,
//              DISP=SHR
//IXPD1    DD   DSN=dbdlib-dataset-name1,
//              DISP=SHR
//         DD   DSN=dbdlib-dataset-name2,
//              DISP=SHR
//         DD   DSN=dbdlib-dataset-name3,
//              DISP=SHR
//IEFRDER  DD   DSN=log-dataset-name,
//              UNIT=perm-device,
//              SPACE=(1048,(200,400),RLSE),
//              DCB=(RECFM=VB,LRECL=1044,BLKSIZE=1048),
//              DISP=(NEW,CATLG,CATLG)
//DFSVSAMP DD   DSN=dfsvsamp-pds(member),
//              DISP=SHR
//ISPMLIB  DD   DSN=File-AID-message-lib,
//              DISP=SHR
//SYSOUT   DD   SYSOUT=output-class
//dbdd1    DD   DSN=database-dataset-1,
//              DISP=OLD
//dbdd2    DD   DSN=database-dataset-2,
//              DISP=OLD
//dbddn    DD   DSN=database-dataset-n,
//              DISP=OLD
//DFSURWF1 DD   DSN=&&SFSURWF1,
//              UNIT=temp-device,
//              SPACE=(19069,(1,20),RLSE),
//              DCB=(RECFM=VB,LRECL=900,BLKSIZE=19069),
//              DISP=(NEW,PASS)
//DFSURCDS DD   DSN=&&DFSURCDS,
//              DISP=(OLD,PASS)
//SYSIN    DD   *,DCB=BLKSIZE=80
DLI parameters for DFSRRC00
```

Figure 5-10. JCL to Execute Initialize Batch job, Part 2

```
//*********************************************************************
//*PREFIX RESOLUTION:                                                 *
//     THIS STEP EXECUTES THE IMS PREFIX RESOLUTION UTILITY.          *
//*********************************************************************
//PRFXRESL EXEC PGM=DFSURG10,
//              COND=(4,LT)
.
. JCL not shown for this step
.
//*********************************************************************
//*HISAM UNLOAD:                                                      *
//*   THIS STEP EXECUTES THE IMS HISAM UNLOAD UTILITY                 *
//*********************************************************************
//HISMUNLD EXEC  PGM=DFSRRC00
//               COND=(4,LT),
//               PARM='ULU,DFSURL0'
.
. JCL not shown for this step
.
//*********************************************************************
//*PREFIX UPDATE:                                                     *
//*    THIS STEP EXECUTES THE IMS PREFIX UPDATE UTILITY.              *
//*********************************************************************
//PRFXUPDT EXEC PGM=DFSRRC00,
//              COND=(4,LT),
//              PARM='ULU,DFSURGP0'
.
. JCL not shown for this step
.
//*****************************************************************
//* IMAGE COPY:                                                   *
//*   THIS STEP EXECUTES THE IMS IMAGE COPY UTILITY.              *
//*****************************************************************
//IMAGECOP EXEC PGM=DFSUDMP0,
// COND=(8,LT),
// PARM='DBRC=Y'
//STEPLIB  DD DSN=IMS710A.SDFSRESL,
//            DISP=SHR
//DFSRESLB DD DSN=IMS710A.SDFSRESL,
//            DISP=SHR
//IMS      DD DSN=IX.HALDB.DBDLIB,
//            DISP=SHR
//DFSVSAMP DD DSN=PLGSXK0.JCL.CNTL(DFSVSAMP),
//            DISP=SHR
//SYSPRINT DD SYSOUT=(X)
//IMAG0001 DD DSN=PLGSXK0.HPORDR.HPORDR1A.D010108.T195153,
//            SPACE=(1048,(200,400),RLSE),
//            DISP=(NEW,CATLG,CATLG)
//IMAG0002 DD DSN=PLGSXK0.HPORDR.HPORDR2A.D010108.T195153,
//            SPACE=(1048,(200,400),RLSE),
//            DISP=(NEW,CATLG,CATLG)
//IMAG0003 DD DSN=PLGSXK0.HPORDR.HPORDR3A.D010108.T195153,
//            SPACE=(1048,(200,400),RLSE),
//            DISP=(NEW,CATLG,CATLG)
//HPORDR1A  DD DSN=PLGSXK0.HPORDR1.A00001,
//            DISP=SHR
//HPORDR2A  DD DSN=PLGSXK0.HPORDR2.A00002,
//            DISP=SHR
//HPORDR3A  DD DSN=PLGSXK0.HPORDR3.A00003,
//            DISP=SHR
//SYSIN    DD *
D1 HPORDR   HPORDR1A IMAG0001
D1 HPORDR   HPORDR2A IMAG0002
D1 HPORDR   HPORDR3A IMAG0003
```

Figure 5-11. JCL to Execute Initialize Batch Job, Part 3

```
//*********************************************************************
//*DATA BASE DELETE:                                                  *
//*    THIS STEP DELETES THE DUMMY DATA BASE SEGMENT(S) INSERTED       *
//*INTO THE DATA BASE(S) DURING THE DBINIT STEP.                       *
//*********************************************************************
//DBDELETE EXEC PGM=IXPINTDV,
//              COND=(4,LT),
//              PARM='parameter information'
//STEPLIB  DD   DSN=ims-reslib-dataset-name,
//              DISP=SHR
           DD   DNS=File-AID-for-IMS-load-lib
//              DISP=SHR
//DFSRELB  DD   DSN=ims-reslib-dataset-name,
//              DISP=SHR
//IXPD1    DD   DSN=dbdlib-dataset-name1,
//              DISP=SHR
//         DD   DSN=dbdlib-dataset-name2,
//              DISP=SHR
//         DD   DSN=dbdlib-dataset-name3,
//              DISP=SHR
//IEFRDER  DD   DSN=log-dataset-name,
//              UNIT=perm-device,
//              SPACE=(1048,(200,400),RLSE),
//              DCB=(MOD,DELETE,KEEP)
//DFSVSAMP DD   DSN=dfsvsamp-pds(member)
//              DISP=SHR
//IXPMLIB  DD   DSN=File-AID-for-IMS-message-lib,
//              DISP=SHR
//SYSOUT   DD   SYSOUT=output-class
//IXPSTATS DD   DSN=&&IXPSTATS,
//              UNIT=temp-device,SPACE=(6160,(10,5),RLSE),
//              DCB=(DSORG=PS,RECFM=FB,LRECL=80,BLKSIZE=6160),
//              DISP=(NEW,PASS)
//dbdd1    DD   DSN=database-dataset-1,
//              DISP=OLD
//dbdd2    DD   DSN=database-dataset-2,
//              DISP=OLD
//dbddn    DD   DSN=database-dataset-n,
//              DISP=OLD
//SYSIN    DD   *,DCB=BLKSIZE=80
DLI parameters for DFSRRC00
//*********************************************************************
//*DATA BASE INITIALIZE SUMMARY REPORTING:                            *
//*    THIS STEP PRODUCES THE DATA BASE INITIALIZE SUMMARY REPORT.     *
//*********************************************************************
//RPTSTATS EXEC PGM=IXPRPTDV,
//              COND=(EVEN),
//              PARM='parameter information'
//STEPLIB  DD   DSN=File-AID-for-IMS-load-lib,
//              DISP=SHR
//IXPSTATS      DSN=&&IXPSTATS,
//              DISP=(OLD,DELETE,DELETE)
//IXPMLIB  DD   DSN=File-AID-for-IMS-message-lib,
```

The parameter information in the PARM field of the EXEC statement for the DBINIT step must be coded as follows:

Table 5-1. EXEC Statement PARM Field - DBINIT Step

Description	Value	Start Posn	End Posn
Constant	/N	1	2
Primary DBD name	name of primary DBD	3	10
Constant	INSN	11	14
IMS Version/Release	version/release number (vvrrr)	15	19

In the example below, a DBD of PORDR is initialized:

```
// PARM='/NPORDR   INSN03100'
```

The following DD statements are required for the DBINIT step:

Table 5-2. DBINIT DD Statements

DD Statement	Description
PROCLIB DFHESL	When you specify the SSM IMS parameter on either a DL/I or BMP parameter string, the system attempts to allocate appropriate datasets to the PROCLIB and DFHESL ddnames for use during edit and browse sessions. In addition, JCL that executes DL/I or BMP jobs contains the appropriate concatenations of these ddnames.
IXPIMBED	Allocate this DD to DUMMY to indicate to File-AID for IMS that all database dataset names are imbedded in the JCL.
IXPIMSDY	Allocate this DD to DUMMY to indicate to File-AID for IMS that all database dataset names are to be obtained for the IMS dynamic allocation source.
STEPLIB	Designates the IMS system datasets that contain the IMS nucleus, required action modules, and the library where the File-AID for IMS/ISPF load modules are stored.
DFSRESLB	Designates the IMS system datasets that contain the IMS nucleus and required action modules.
IXPD1	Designates the DBD load library datasets that contain the DBD members that describe the databases.
IEFRDER	Designates the IMS log dataset.
DFSVSAMP	The dataset that contains the control statements that describe the buffer pools used by IMS.
IXPMLIB	The library that contains File-AID for IMS/ISPF messages.
SYSOUT	The output class for possible error messages.
DB datasets	The datasets for the databases.
DFSURWF1	The work dataset passed to the Prefix Resolution step.
DFSURCDS	The control dataset created by the Pre-reorganization utility.
SYSIN	The DLI parameters passed to DFSRRC00 as specified in Option 0.3, IMS Parameters.

The parameter information in the PARM field of the EXEC statement for the DBDELETE step must be coded as follows:

Table 5-3. EXEC Statement PARM Field - DBD

Description	Value	Start Posn	End Posn
Constant	/N	1	2
Primary DBD name	name of primary DBD	3	10
Constant	DELY	11	14
IMS Version/Release	version/release number	15	19

The following DD statements are required for the DBDELETE step:

Table 5-4. DBDELETE DD Statements

DD Statement	Description
PROCLIB DFHESL	When you specify the SSM IMS parameter on either a DL/I or BMP parameter string, the system attempts to allocate appropriate datasets to the PROCLIB and DFHESL ddnames for use during edit and browse sessions. In addition, JCL that executes DL/I or BMP jobs contains the appropriate concatenations of these ddnames.
IXPIMBED	Allocate this DD to DUMMY to indicate to File-AID for IMS that all database dataset names are imbedded in the JCL.
IXPIMSDY	Allocate this DD to DUMMY to indicate to File-AID for IMS that all database dataset names are to be obtained for the IMS dynamic allocation source.

Table 5-4. DBDELETE DD Statements

DD Statement	Description
STEPLIB	Designates the IMS system datasets that contain the IMS nucleus, required action modules, and the library where the File-AID for IMS/ISPF load modules are stored.
DFSRESLB	Designates the IMS system datasets that contain the IMS nucleus and required action modules.
IXPD1	Designates the DBD load library datasets that contain the DBD members that describe the databases.
IEFRDER	Designates the IMS log dataset.
DFSVSAMP	The dataset that contains the control statements that describe the buffer pools used by IMS.
IXPMLIB	The library that contains File-AID for IMS/ISPF messages.
SYSOUT	The output class for possible error messages.
IXPSTATS	The temporary dataset used as input to the RPTSTATS step to create the load summary report.
DB datasets	The datasets for the databases.
SYSIN	The DLI parameters passed to DFSRRC00 as specified in option 0.3, IMS Parameters.

The parameter information in the PARM field on the EXEC statement for the RPTSTATS step must be coded as follows:

Table 5-5. EXEC Statement PARM Field - RPTSTATS Step

Description	Value	Start Posn	End Posn
Constant	/N	1	2
Maximum Print Lines Per Page	20 to 99	3	4
Spacing Before Detailed Headers	1 to 5, or T	5	5
Data Format	E, D, or M	6	6
Terminal Type		7	14

The Maximum Print Lines Per Page and Spacing Before Detailed Headers parameters are common report parameters that are explained more fully in “Specify print parameters” on page 2-5.

The following DD statements are required for the RPTSTATS step:

Table 5-6. RPTSTATS DD Statements

DD Statement	Description
STEPLIB	The dataset where the File-AID for IMS/ISPF load modules reside.
IXPSTATS	The temporary dataset, passed from the DBDELETE step, that contains statistics used for reporting purposes.
SYSOUT	The output class for the Data Base Initialization Report.
IXPMLIB	The library that contains the File-AID for IMS/ISPF messages.

An initialization execution return code (RC) appears in the output listing. In general, the return codes can be summarized as follows:

```
RC    Explanation              Description
0     job ran to completion    none
16    job aborted,             system error
      severe error
```

Database Initialization Report

The Data Base Initialization Report, shown in Figure 5-12 on page 5-15, is generated by the initialize batch job when full function databases are initialized. The batch job for initialization of DEDB databases generates only the IMS utilities report. An example of the output messages and/or statistics by the IMS utilities is not shown here.

The top section of the report shows the database DBD library dataset names and the DBD member name. The middle section shows all the databases with their associated DD names and dataset names. This section of the report is similar to the layout of the Initialize Data Base - Data Base Dataset Specification screen. The bottom section shows a message that describes the outcome of the initialization.

Figure 5-12. Data Base Initialization Report

```
File-AID for IMS 7.1                    DATA BASE INITIALIZATION REPORT                                    PAGE     1
INIT: CW.FISAMP.PORDRDD1                         SUMMARY INFORMATION                                 DATE 2003-01-27
                                                                                                           TIME 11:00:31

                              DBD DATASET: CW.FISAMP.DBDLIB1                          MEMBER: PORDR
                                           CW.FISAMP.DBDLIB2
                                           CW.FISAMP.DBDLIB3

                              DATA BASE DATASET(S)

                                    DBD       DDNAME                     DATASET NAME
                                 --------   --------   -------------------------------------------
                                 PORDR      PORDRDD1   CW.FISAMP.PORDRDD1


                                            PORDRDD2   CW.FISAMP.PORDRDD2


                                 PCUST      PCUSTDD    CW.FISAMP.PCUSTDD


                        X700 DATA BASE DATASETS WERE SUCCESSFULLY INITIALIZED


                                            **** E N D   O F   R E P O R T ****
```

Chapter 6. Extract/Load

Option 4, Extract/Load, is used to extract segments from an IMS database to a sequential file and load records from a sequential file to an IMS database. When you use this option, a complete set or subset of segments within a database can be copied to another database. When records are extracted from a database that has a logical and/or application relationship to other databases, the related database records in the other databases can also be extracted, which ensures that all relationships are resolved when the segments are reloaded.

If you do not specify a sub-option on the Primary Option Menu, the Extract/Load Data Base Menu is displayed. If you specify a sub-option, this screen is skipped.

Figure 6-1. Extract/Load Data Base Menu

```
File-AID for IMS  ------  Extract/Load Data Base Menu  ------------------------
OPTION  ===>
ENV: DEV1 - DEVELOPMENT ENVIRONMENT WITH CONCATENATIONS

   1  DATA BASE EXTRACT - Extract from a data base to a sequential file

   2  DATA BASE LOAD    - Load from a sequential file to a data base
```

Enter 1 or 2 in the Option field, and press Enter. If you enter 1, the Data Base Specification screen (Figure 6-2 on page 6-3) is displayed. If you enter 2, the screen shown on (Figure 6-16 on page 6-29) is displayed. To exit the Extract/Load option, enter the END or RETURN primary command or a jump command.

The following commands are always available throughout the course of the extract/load conversation:

- RETURN will take you back to the Primary Option Menu.
- END will return you to the appropriate earlier menu.
- ENTER will advance to the next screen in the conversation.

Database Extract Function (Online Conversation)

The Data Base Extract function consists of an online conversation and a batch job stream. The online screens prompt you for the information needed to submit the batch job to do the actual extract.

The online conversation consists of a sequence of screens where you do the following:

1. Specify the PSB containing the PCBs to be used to access the FROM database (for static PSB only).
2. Specify the DBD for the extract FROM database, the job type of the extract job, and the optional use of an external KEY value.
3. Specify the use of an application relationship to extract records from application-related databases.
4. Specify the use of selection criteria to limit the extract to certain segment types or occurrences.
5. Specify the dataset names for the extract FROM database.
6. Specify the dataset name of the extract TO file, its attributes, and the extract job JCL information.
7. Optionally edit the JCL generated by File-AID for IMS/ISPF to perform the extract.

The batch job consists of the following steps:

1. SRTGEN1 - Allocate and initialize temporary dataset to-dataset-name.CK.
2. SRTGEN2 - Allocate and initialize temporary dataset to-dataset-name.XK.
3. SRTGEN3 - Allocate and initialize temporary dataset to-dataset-name.RK.
4. SRTKEY - (Optional) sort key file used to drive extract.
5. DBEXTRCT - Data Base Extract (IXPDTFDV)

   Retrieves segments from the extract FROM database, applies selection criteria (if specified), applies application relationships (if specified), and writes the segment data, along with File-AID for IMS/ISPF prefix information, to the extract TO file.
6. DELETE - Deletes temporary datasets allocated in steps 1-3.
7. RPTSTATS - Data Base Extract Summary Reporting (IXPRPTDV)

   Writes a report that summarizes the results of the extract.

Data Base Extract - Data Base Specification

The Data Base Extract - Data Base Specification screen is the first screen displayed upon entry to the Data Base Extract sub-option. There are two variations of this screen depending on whether you intend to use dynamic or static PSBs. For initial use, at least in a DLI region type, we suggest you use a dynamic PSB because it is more convenient.

If both dynamic and static PSB processing are supported in the current environment, you can enter the XPSB command on either screen to switch to the alternate screen. If only one of these modes is allowed, the XPSB command results in the display of a message indicating that the alternate type of PSB is not supported in the current environment.

PSB processing for your ISPF session is set on the System Parameters screen. Figure 6-2 on page 6-3 is displayed if you entered **D** in the Dynamic or Static field on the System Parameters screen. Figure 6-3 on page 6-5 is displayed if you entered **S**. Refer to “System Parameters” on page 2-3 for additional information.

Dynamic PSB

Figure 6-2. Data Base Extract - Data Base Specification Screen

```
File-AID for IMS - Data Base Extract - Data Base Specification (Dynamic PSB) --
COMMAND ===>
ENV: DEV1 - DEVELOPMENT ENVIRONMENT WITH CONCATENATIONS

           Extract job type  . . DLI        (DLI, or BMP)  BMP AGN = IMS6RACF

Specify the DBD for the "FROM" data base:

         + DBDLIB Dataset 1  . . FISAMP.DBDLIB
                  Dataset 2  . .
                     Member  . .            (Blank or pattern for member list)
-------------------------------------------------------------------------------
The "key values" to the "ROOT" segment of the "FROM" data base may be
supplied in a separate dataset.

Extract based on key values  . . N          (Y = Yes; N = No)

Specify the dataset that contains the "key values" below:
             "keys" dataset  . . DEVL.CNTL
                     Member  . . KEYFILE  (Blank or pattern for member list)
```

Note: The presence of a highlighted plus (+) or minus (-) sign indicates dataset concatenations. Refer to “Dataset Concatenation Support” on page 3-1 for additional information.

Extract Job Type

Enter one of the following:

DLI The extract job is submitted to run as an IMS batch DLI application. The FROM database and all its related databases must be offline from IMS DC and CICS regions or available under IMS data sharing.

BMP The extract job is submitted to run as an IMS BMP application. The FROM database and all its related databases must be online to the IMS DC region.

Extracts of FAST PATH databases must run as BMP jobs. If a DEDB database has multiple areas and some are down, the down areas are skipped and processing continues.

BMP AGN

The IMS configuration at your installation determines whether the Application Group Name (AGN) is required for BMP region types. If it is required, enter the appropriate AGN before processing a BMP region.

Note: Because BMP region processing is determined when you select its associated environment, the BMP Region Selection screen is no longer displayed. If the BMP region associated with the current environment is not the one you want to use, execute the ENV command to select the environment that contains the appropriate BMP region. Refer to “ENV” on page 11-13 and “Select IMS Environment” on page 2-2 or more information.

DBDLIB Dataset 1 and Dataset 2

Enter one or two DBD load library dataset names.

Member

Enter the member that describes the database from which you want to extract (that is, the FROM database). The DBD member entered must describe a physical database. Logical and index DBDs are not supported in the Extract function. Leave member blank to select the DBD from the list of DBDs.

Extract Based on Key Values

Defines whether the extract is based on key values supplied in a separate dataset. When using this option, you supply a record in the dataset for each FROM database root segment you want to extract. You can also apply selection criteria to the FROM database record.

Enter one of the following:

Y The root segments of the FROM database are selected based on the values specified in the dataset. Each record in the dataset results in a direct access to the FROM database. If a root segment with this value exists, extract processing continues. If a root segment with this value does not exist, the new record in the dataset is read.

N The root segments of the FROM database are **not** based on values specified in the dataset. The extract process retrieves root segments of the FROM database sequentially or directly based on selection criteria.

Member

Specify the member in the keys library that contains the values for the root segment of the FROM database. Table 6-2 describes the default layout for key values appearing in a keys library member. If the layout of the keys does not correspond to that shown in Table 6-2, then Option 6, Selection Criteria must be used to define the layout. Details concerning this procedure are found in sections "Formatted Criteria Screen" Figure 8-16 on page 8-27 and "Unformatted Criteria Screen" Figure 8-15 on page 8-24 in this manual. The "Formatted Criteria Screen" applies when using formatted selection criteria. The "Unformatted Criteria Screen" applies when using unformatted selection criteria.

Table 6-1. Default Key File Layout

Field	Starting Column	Ending Column	Description
Unused	1	9	
Key Value	10	n	The value in the same internal format that is returned from IMS in the key feedback area.

Terminating the Screen

Do one of the following to terminate the Data Base Extract - Data Base Specification screen:

- Press Enter to advance to the next screen in the conversation.

  If you left the DBD Member field blank, the next screen displayed is a DBD Member List. If you entered two DBD library dataset names, the member list is a merged and sorted list of members in both datasets. Select a member from the member list and press Enter or enter the END command to return to the Data Base Extract - Data Base Specification screen.

  If you specified a member in the DBD Member field or selected a member from the DBD Member List, the extract conversation continues as follows:

  – If you specified BMP for the extract job type, the Data Base Extract Option Specification screen (Figure 6-5 on page 6-10) is displayed.

  – If you specified DLI for the extract job type, the Data Base Extract - Option Specification screen (Figure 6-5 on page 6-10) is displayed.

- Enter the END command to return to the Extract/Load Data Base Menu or the Primary Option Menu. The screen you return to is determined by where you started the conversation.
- Enter the RETURN command to return to the Primary Option Menu.

Static PSB

Figure 6-3. Data Base Extract - Data Base Specification Screen (static PSB)

```
File-AID for IMS  -  Data Base Extract - Data Base Specification (Static PSB) -
COMMAND ===>
ENV: DEV1 - DEVELOPMENT ENVIRONMENT WITH CONCATENATIONS

           Extract job type  . . DLI        (DLI, or BMP)  BMP AGN = IMS6RACF


Specify libraries for the "FROM" data base:

         +  PSBLIB Dataset 1 ===> 'CW.FISAMP.PSBLIB'
                   Dataset 2 ===>
                      Member ===> IXPPSBSA   (Blank or pattern for member list)

         +  DBDLIB Dataset 1 ===> 'CW.FISAMP.DBDLIB'
                   Dataset 2 ===>
                      Member ===> PORDR      (Blank or pattern for member list)

--------------------------------------------------------------------------------
The "key values" to the "ROOT" segment of the "FROM" data base may be
supplied in a separate dataset.

Extract based on key values ===>            (Y = Yes, N = No)

Specify the dataset that contains the "key values" below:
```

Note: The presence of a highlighted plus (+) or minus (-) sign indicates dataset concatenations. Refer to “Dataset Concatenation Support” on page 3-1 for additional information.

Extract Job Type

Enter one of the following:

DLI The extract job is submitted to run as an IMS batch DL/I application. The FROM database and all its related databases must be offline from IMS DC and CICS regions or available under IMS data sharing.

BMP The extract job is submitted to run as an IMS BMP application. The FROM database and all its related databases must be online to the IMS DC or DBCTL system.

Extracts of FAST PATH databases must run as BMP jobs. If a DEDB database has multiple areas and some are down, the down areas are skipped and processing continues.

BMP AGN

The IMS configuration at your installation determines whether the Application Group Name (AGN) is required for BMP region types. If it is required, enter the appropriate AGN before processing a BMP region.

Note: Because BMP region processing is determined when you select its associated environment, the BMP Region Selection screen is no longer displayed. If the BMP region associated with the current environment is not the one you want to use, execute the ENV command to select the environment that contains the appropriate BMP region. Refer to "ENV" on page 11-13 and "Select IMS Environment" on page 2-2 or more information.

PSBLIB Dataset 1 and Dataset 2

Enter one or two PSB library dataset names.

Member

Enter the name of the PSB to be used for the extract. This PSB must contain all the PCBs with the correct processing options required to perform the extract. See "PCBs Used for Extract" on page 6-9 for more information about PCBs required to perform an extract. Leave the member blank to select the PSB from the list of PSBs.

DBDLIB Dataset 1 and Dataset 2

Enter one or two DBD load library dataset names.

Member

Enter the member that describes the database from which you want to extract (that is, the FROM database). The DBD member entered must describe a physical database. Logical and index DBDs are not supported. Leave the member blank to select the DBD from the list of PCBs in the static PSB.

Extract Based on Key Values

Defines whether the extract is based on key values supplied in a separate dataset. When using this option, you supply a record in the dataset for each FROM database root segment you want to extract. You can also apply selection criteria to the FROM database record.

Enter one of the following:

Y The root segments of the FROM database are selected based on the values specified in the dataset. Each record in the dataset results in a direct access to the FROM database. If a root segment with this value exists, extract processing continues. If a root segment with this value does not exist, the new record in the dataset is read.

N The root segments of the FROM database are **not** based on values specified in the dataset. The extract process retrieves root segments of the FROM database sequentially or directly based on selection criteria.

Member

Specify the member in the keys library that contains the values for the root segment of the FROM database. Table 6-2 describes the default layout for key values appearing in a keys library member. If the layout of the keys does not correspond to that shown in Table 6-2, then Option 6, Selection Criteria must be used to define the layout. Details concerning this procedure are found in sections "Formatted Criteria Screen" Figure 8-14 on page 8-21 and "Unformatted Criteria Screen" Figure 8-15 on page 8-24 in this manual. The "Formatted Criteria Screen" applies when using formatted selection criteria. The "Unformatted Criteria Screen" applies when using unformatted selection criteria.

Table 6-2. Default Key File Layout

Field	Starting Column	Ending Column	Description
Unused	1	9	

Table 6-2. Default Key File Layout

Field	Starting Column	Ending Column	Description
Key Value	10	n	The value in the same internal format that is returned from IMS in the key feedback area.

Terminating the Screen

Do one of the following to terminate the Data Base Extract - Data Base Specification screen (static PSB):

- Press Enter to advance to the next screen in the conversation.

  The Extract DBD Selection List for PSB is displayed (Figure 6-4 on page 6-7).
- Enter the END command to return to the Extract/Load Data Base Menu or the Primary Option Menu. The screen you return to is determined by where you started the conversation.
- Enter the RETURN command to return to the Primary Option Menu.

Extract DBD Selection List for PSB (Static PSB Only)

This screen displays all the PCBs in the PSB you selected to use to perform the extract. Its purpose is to allow you to select the DBD from which you want to extract. If you selected the DBD on the prior screen, the Line Cmd for that DBD will already be set to S. If you did not select the DBD, use the Line Cmd of S to select it.

If the DBD you select is logically related to another DBD using a logical child segment, you will also need a PCB in the PSB providing access to this database. PCBs to be used for access to related DBDs are determined by File-AID for IMS. The first acceptable PCB is always used. In order for you to know which PCBs will be used to access the related databases, the REL-DBD column is set to L for each PCB used to access a logically related database. Refer to “PCBs Used for Extract” on page 6-9 for more information on the requirements and implications of using PCBs for extract.

Figure 6-4. Extract DBD Selection List for PSB

```
File-AID for IMS  -  Extract DBD Selection List for PSB EXTSAMP - LINE  -------
COMMAND ===>                                                   SCROLL ===>
-------------------------------------------------------------------------

                     Log  Pcb    Segments             PCB   Segment  Secondary
Line   DBD     REL   Phy  Err    in    in     PCB     Proc   Proc    Processing
Cmd    Name    DBD   DBD  Msg   PCB    DBD   Label    OPT    Opts    Sequence
---  --------  ---   ---  ----  ----------  --------  ----  -------  --------
 S   PRODR      -    PHY          5 OF 5    PORDRA    A      =PCB
 _   PCUST      L    PHY          3 OF 3    PCUSTA    A      =PCB
 _   PPART      -    PHY          2 OF 2    PPARTA    A      =PCB
     *END*






S Selects the PCB to be used for the Extract function
H Graphically displays the Hierarchical structure of the DBD
When PCB selected, REL-DBD shows PCBs used for logically related DBDs

Press ENTER without changing screen to proceed when DBD is selected
```

Line Cmd

Enter the S line command to select one PCB to be used to access the extract database. The H line command can be used to graphically display the hierarchical structure of the DBD.

DBD Name

DBD name specified in the PCB statement. Only physical DBDs are supported for extract and load. Logical and index DBDs cannot be used.

REL DBD

Indicates which PCBs will be used to access the related databases. An L in this column indicates a PCB to be used for a related DBD.

Log Phy DBD

Indicates whether this is a physical, logical or index DBD. Only physical DBDs can be used for extract.

PCB Err Msg

Some PCBs may not be usable for an extract function. For example, if the PCB Processing Option is L, this PCB does not have get sensitivity and cannot be used for extract. If the PCB is not usable, the appropriate error message number is displayed. Selecting a PCB which has a PCB Err Msg will cause the short message to be displayed; press <PF1> to display the full message.

Segments in PCB and in DBD

Displays the number of segments in the DBD and the PCB. If the number of segments in the PCB is less than the number in the DBD, the PCB is not sensitive to all of the segments in the DBD. The segments to which the PCB are not sensitive will not be extracted.

PCB Label

In the IMS PSB, the PCB for each DBD can be assigned a label. If a label was provided, it is displayed here. This may be particularly useful when the same DBD is included in the PSB more than once. In this instance, the label can be used to indicate the specifics of each entry.

PCB Proc OPT

Identifies the value for PROCOPT on the PCB statement. This reflects the IMS functions which are valid when using this PCB. File-AID for IMS examines this to determine if the PCB has the required processing option to support the requested function.

Segment Proc Opts

Indicates whether the processing options (PROCOPTS) for each of the segments in the PCB are the same as the processing options for the PCB. For extract, a dependent segment may have a processing option of K, indicating that the data is not returned for this segment. In this case, the segment will not be extracted, although children of the segment may be extracted. You can use the H command to display the processing option of each segment in the PCB.

Secondary Processing Sequence

Indicates the name of the secondary index on the segment that is being used as the processing sequence to access the root segments when using this PCB. Extract and load need to access the root segments using the primary processing sequence; therefore, this PCB cannot be used.

Terminating the Screen

After selecting the PCB with the S Line Cmd, the Load DBD Selection List screen is displayed again so you can see the PCBs which will be used to access the logically related databases.

Do one of the following to terminate screen:

- Press Enter to advance to the next screen. The Data Base Extract - Option Specification screen (Figure 6-5 on page 6-10) is displayed.
- Enter the END command to return to the Data Base Selection screen.

PCBs Used for Extract

For extract, each PCB used (and root segments in the PCB) must have at least get processing option. There are three methods which can be used to control the selection of segment types to be extracted from the database. They are:

1. Selection Criteria—Selection criteria can specify that segments of this type should not be extracted. Dependent segments of the segment not extracted will still be extracted. Selection criteria can be used for the database which is the target of the extract, but not on related databases.
2. Segment sensitivity—If the PSBGEN does not include a SENSEG for the segment type, then the PCB is not sensitive to the segment and neither the segment nor any dependents of the segment will be returned by IMS. Segment sensitivity can be used to not extract segments in the database which is the target of the extract and also used for related databases.
3. Segment Processing Option — If a Key processing option is specified in PSBGEN, segments of this type are not returned by IMS. Dependent segments of the segments are returned by IMS. Key processing option can be used to not extract segments in the database which is the target of the extract and also used for related databases.

If one of the above methods causes dependent segments to be extracted without their parent segment, an attempt to load the extracted data in load mode will result in errors when attempting to insert the segments where no parent was inserted.

The screen processing phase will show which PCBs will be used to access related databases. The first acceptable PCB is the one which will be used.

A warning message is issued when using either logical relationships or application relationships, and the pointer segment is extracted but the target of the pointer segment is not extracted.

Suggested PSB to be Used for Extract

The PSB must contain a PCB with at least get processing option for the extract database and all logical and application related databases. In order to not drop any segment types, the PCBs should be sensitive to all segments in the database. If running in an online environment lock over head and contention can be reduced by using a processing option of GOT. You can use the same PSB for load with the update or insert option if all PCBs have a processing option of A.

For a DEDB, HSSP is not supported. Therefore, a PCB with a processing option of H cannot be used.

Data Base Extract - Option Specification

The Data Base Extract - Option Specification screen is used to specify the use of application relationships and selection criteria to limit the segment types and occurrences that are extracted.

Figure 6-5. Data Base Extract - Option Specification Screen

```
File-AID for IMS -  Data Base Extract - Option Specification  ----------------
COMMAND ===>
ENV: DEV1 - DEVELOPMENT ENVIRONMENT WITH CONCATENATIONS

Use application relatnships  . . Y        (Y= Yes; N= No)

+ Appl relationship dataset  . . 'CW.FISAMP.APPLREL'
-------------------------------------------------------------------------------
Selection criteria usage . . . . N        (E= Existing; T= Temporary; N= None)

+ Selection criteria dataset . . FISAMP.SELCRIT
                    Member . . .          (Blank or pattern for member list)
-------------------------------------------------------------------------------
If temporary selection criteria are being applied:
Use COBOL layouts  . . . . . . . N        (Y - Required for formatted selection
                                           N - Segment/unformatted selection)

Create File-AID/MVS XREF . . . . N        (Y= Yes; N= No)

+ Segment/Layout XREF dataset  . 'CW.FISAMP.XREFC'
                      Member  . .         (Blank or pattern for member list)

+ COBOL layout Dataset 1 . . . . 'CW.FISAMP.COBOLLIB'
              Dataset 2 . . . . .
```

Note: The presence of a highlighted plus (+) or minus (-) sign indicates dataset concatenations. Refer to "Dataset Concatenation Support" on page 3-1 for additional information.

Use application relatnships

Indicate whether application relationships are applied during the extract.

Appl relationship dataset

Enter the name of the application relationship dataset if you entered a Y in the Use Application Relatnships field. A member name for the PDS dataset is not required because the name must be the same as the DBD name in the DBDLIB.

Selection criteria usage

Indicate whether to apply selection criteria during the extract and, if applied, what type of selection criteria to use.

E Existing selection criteria created in Option 6 are applied during the extract.

T Temporary selection criteria are created and applied. The Selection Criteria Dataset and Member fields are ignored. You create temporary selection criteria after completing this screen. Temporary selection criteria are deleted after the batch extract job completes.

N No selection criteria are applied, and the remainder of the fields on the screen are ignored. Note that an extract based on key values (Y specified on the Data Base Extract—Data Base Specification screen) will have an implied selection criteria for the root segment of the FROM database.

Selection criteria dataset and member

If you entered E in the Selection Criteria Usage field, enter the name of the dataset and member that contains the selection criteria. If the dataset is a PDS and no member is specified, a member list is displayed.

Use Layouts

When using temporary selection criteria if you enter Y in this field, you must also enter a segment/layout XREF dataset name, member, and at least one layout dataset name. This field enables you to create and use formatted selection criteria.

If you enter N, all other input fields in this section are ignored, and you are limited to creating only segment and unformatted selection criteria.

If your installation has both the COBOL and PL/I language support options of File-AID for IMS installed, ensure that your current language mode is compatible with the segment layout and segment/layout XREF dataset information you specify. Your current language mode is indicated by the word COBOL or PL/I preceding the Use Layouts and the Layout Dataset fields. To change language mode, enter the COBOL or PLI primary command on the COMMAND line.

File-AID for IMS/ISPF maintains separate concatenations of COBOL and PL/I layouts and cross-reference datasets. These concatenations automatically toggle between the COBOL and PL/I sets when you enter the COBOL or PLI command. Layouts and cross-reference datasets that you have entered for use with COBOL are kept separate from those you have entered for PL/I.

Segment/Layout XREF dataset and Member

Identify the segment/layout XREF dataset name. If the dataset is a PDS and a member is not specified, a member list is displayed. This field requires input if you entered Y in the Use Layouts field.

Layout Dataset 1 and Dataset 2

Identify the segment layout dataset name. This field requires an entry if you entered a Y in the Use Layouts field.

Refer to Chapter 8, “Selection Criteria” for more information on the use of selection criteria.

When searching for a segment layout, File-AID for IMS searches the Dataset 1 library before the Dataset 2 library, and then searches all the datsets listed in the first layout concatenation before searching the second layout concatenation. Refer to “Segment Layout Dataset Concatenation” on page 3-4 for details.

Creating a File-AID/MVS XREF

To create a File-AID/MVS XREF, enter **Y**. When **Y** is specified, Use layouts must also be Y, you must also enter a segment/layouts XREF dataset name and at least one layout dataset name. The member name field is ignored for the XREF dataset.

Terminating the Screen

Do one of the following to terminate the Data Base Extract - Option Specification screen:

- Press Enter to advance to the next screen in the conversation.
  - If you applied existing selection criteria and left the member name blank, the Selection Criteria Member List screen is displayed. Select a member and press Enter to advance to the next screen in the conversation. Enter the END command on the Member List screen to return to the Data Base Extract - Option Specification screen.
  - If you specified temporary selection criteria, you are taken through selection criteria creation as is if you had selected Option 6, Selection Criteria.
  - If you are using static PSB and application relationships, the Display PCBs for related DBDs screen (Figure 6-7 on page 6-14) is displayed.
  - If you specified a DLI extract job type on the Data Base Extract - Data Base Specification screen, the Data Base Dataset Specification screen (Figure 6-8 on page 6-15) is displayed.

  - If you specified a BMP region type, the Data Base Extract - JCL Specification screen (Figure 6-9 on page 6-17) is displayed.
- Enter the END command to return to the Data Base Extract - Data Base Specification screen.
- Enter the RETURN command to return to the Primary Option Menu.

XREF Selection List for Convert

The XREF Selection List for Convert screen is displayed as shown in Figure 6-6 if Create File-AID/MVS XREF is Y. It is used to obtain the XREFs that will be converted. Partial use of the enhanced Extract utility is available for all File-AID/MVS versions prior to 8.7.1.

Figure 6-6. XREF Selection List for Convert Screen

```
File-AID for IMS  -----  XREF Selection List for Convert    ------ LINE 00001
COMMAND ===>                                                  SCROLL ===> CSR
-------------------------------------------------------------------------------
A XREF will be written to the dataset.  The member name will be PORDR
File-AID/MVS XREF dataset  . . . 'CW.FASAMP.XREF'

Create layouts for prefix  . . . Y        (Y= Yes; N= No)

Dataset to write Extract file
Prefix  COBOL layouts  . . . . . 'CW.FISAMP.COBOLLIB'

    DBD     Add       XREF
    Name    XREF     Member
  --------  -----   --------
  PORDR       Y     PORDR
  PCUST       Y     PCUST
******* END OF XREF LIST *******
```

File-AID/MVS XREF dataset

Enter the Name of the File-AID/MVS dataset to which the converted XREF is to be written. The dataset must be a cataloged partitioned dataset with attributes of DSORG=PO, RECFM=VB, a minimum LRECL=300, and a BLKSIZE=304 or larger. The name of the member written to the XREF dataset will be the DBD name of the primary database.

Create layouts for prefix

Specify Y if you want File-AID for IMS to create record layouts for the Extract File Prefix. The prefix layouts will be generated during the DBEXTRCT step of the Extract procress. This will also cause the convert to generate a Segmented File-AID/MVS XREF. For more information about Segmented XREFs, see the *File-AID/MVS Online Reference Manual*. If N is specified, the File-AID/MVS XREF will have a Generated filler for the Extract File Prefix.

Note: To use this option it is necessary to have File-AID/MVS 8.7.1 or later versions installed.

Prefix layouts dataset

This is the dataset to which you want the Extract file Prefix layouts written. This dataset is not used if Create layouts for Prefix is N. A member will be written to the Prefix layout dataset for each Physical or Logical database that could be in the extract file. To use the XREF that is created in File-AID/MVS or FILE-AID/Data Solutions, the prefix layouts must reside in the same dataset as the segment layouts.

DBD Name

Displays the name of the DBD's that could have segments in the extract file.

ADD XREF

Specifies whether the XREF for this DBD is to be added to the File-AID/MVS XREF. The Primary DBD must have Y specified with a valid member name.

XREF Member

The XREF member name in the File-AID for IMS XREF dataset.

Terminating the Screen

Do one of the following to terminate the XREF Selection List for Convert screen:

- Press Enter to advance to the next screen in the conversation.

  If you specified a DLI extract job type on the Data Base Extract - Data Base Specification screen, the Data Base Dataset Specification screen (Figure 6-8 on page 6-15) is displayed. If you specified a BMP region type, the Data Base Extract - JCL Specification screen (Figure 6-9 on page 6-17) is displayed.
- Enter the END command to return to the Data Base Extract - Data Base Specification screen.
- Enter the RETURN command to return to the Primary Option Menu.

Display PCBs for Related DBDs Screen

This screen (shown in Figure 6-7 on page 6-14) is only displayed if using a static PSB and application relationships. In this case, one or more PCBs is required to access the application related DBDs and also any DBD logically related to the application related DBDs. The only purpose for this screen is to show which PCBs will be used to access the application related DBDs and DBDs logically related to them. The column REL-DBD contains an L for PCBs to be used for logically related databases and an A for PCBs to be used for application related DBDs. The format of this screen is similar to the Extract DBD Selection List for PSB screen shown in Figure 6-4 on page 6-7.

Figure 6-7. Display PCBs for Related DBDs Screen

```
File-AID for IMS  -  Display PCBs for Related DBDs - PSB EXTSAMP - LINE -------
COMMAND ===>                                                    SCROLL ===>
-------------------------------------------------------------------------

                     Log  Pcb    Segments             PCB   Segment  Second
Line   DBD     REL  Phy  Err    in    in     PCB     Proc   Proc    Processing
Cmd    Name    DBD  DBD  Msg   PCB    DBD   Label    OPT    Opts    Sequence
---  --------  ---  ---  ----  ----------  --------  ----  -------  --------
 S   PRODR      -   PHY          5 OF 5    PORDRA    A      =PCB
 _   PCUST      L   PHY          3 OF 3    PCUSTA    A      =PCB
 _   PPART      A   PHY          2 OF 2    PPARTA    A      =PCB
     *END*

Press ENTER to continue
```

Terminating the Screen

Do one of the following to terminate this screen:

- Press Enter to advance to the next screen.

  For DLI regions, the next screen will be the Data Base Dataset Specification screen (Figure 6-8 on page 6-15). For BMP regions, the next screen displayed will be the Data Base Extract - JCL Specification screen (Figure 6-9 on page 6-17).

- Press END to return to the Data Base Selection screen.

Data Base Dataset Specification

The Data Base Dataset Specification screen, shown in Figure 6-8 on page 6-15, is displayed after the Data Base Extract - Option Specification screen for DLI extract job types only. This screen is used to specify the dataset names for the database that you want to extract from.

Figure 6-8. EXTRACT - Data Base Dataset Specification Screen

```
------ EXTRACT   --- Data Base Dataset Specification   (DBD-IXPCUST ) LINE 00001
COMMAND ===>                                                SCROLL ===> CSR

Obtain DB Dataset Names from ===> P   (P = Previously used with 'P' here,      S
                                       I = IMS dynamic allocation source)      H
                                                                               R
DBRC not active                                                              D
                                                                             I  L
                                                                             S  E
DBD       DDNAME     DATASET NAME                                PASSWORD   P  V
--------- ---------- ------------------------------------------ --------- --- -
IXPCUST   IXPCUSTD   FISAMP.CUSTOMER                                        SHR N
IXPORDR   IXPORDRD   FISAMP.ORDER                                           SHR N
               ***   END OF DATA BASE DATASET NAMES   ***



Press Enter when data base datasets have been fully designated
Use END command to end Extract Data Base Dataset Specification
```

Obtain DB Dataset Names from

If your installation uses dynamic allocation for databases, enter I. The database dataset names are retrieved from the datasets allocated to the DFSRESLB DD. If File-AID for IMS cannot retrieve the dataset name, the message UNABLE_TO_DETERMINE is displayed in the Dataset Name field. If you enter P, the Dataset Name fields are formatted from your user profile dataset.

DBD

Displays the name of the primary DBD entered on the Data Base Extract - Data Base Specification screen.

DDNAME

Displays the ddname of the first dataset group in the primary DBD.

Dataset Name

Enter the database dataset name to be allocated to the ddname.

There are two conventions for entering a database dataset name. If you enter every node in the dataset name, the name must be enclosed in apostrophes. If the first node of the dataset matches your TSO ID, you can omit the first node and the apostrophes.

When a dataset name has a node identical to the ddname of the dataset, you can substitute an asterisk for that node. If a dataset name has more than one node equal to the ddname, you can substitute an asterisk for only one of the nodes.

A separate line is displayed for each additional dataset group in the primary DBD. The DBD NAME column is blank and the DDNAME column displays the ddname for the dataset group. Each line also has the database Dataset Name and Password fields.

Any external DBDs that are directly referenced by the primary DBD (such as a secondary index DBD, a logically related DBD, or an application related DBD) are shown sequentially under the primary DBD with their ddnames, Data Base Dataset Names, and Password fields. There can also be DBDs and ddnames listed that are not directly referenced by the primary DBD. These are from DBDs that are indirectly related to the primary DBD through the primary's external references. You must enter database dataset names for all listed ddnames.

Once you enter a database dataset name on the Data Base Dataset Specification screen, that dataset name is retained from session to session (refer to "User Profile Dataset" on page 3-6). If you specify **Y** in the Use DB Dataset Names from Dynamic Allocation field, the dataset names are retained only if no dataset names exist in the user profile dataset for the associated database ddnames. In subsequent sessions, File-AID for IMS/ISPF pre-formats those dataset name fields where it has saved names.

Password

Enter the password if the database dataset is OS password protected. The password for an OS password protected dataset is not saved across sessions.

DISP

This is the disposition, which will be used to allocate the datasets. It is either SHR if the dataset will be allocated shared, or OLD if the dataset will be allocated old. For File-AID for IMS functions that do not update the dataset such as browse and extract, the datasets are allocated SHR. Function that update, such as edit and load, cause the dataset to be allocated OLD unless the dataset name is the name registered in DBRC. If the dataset is the name registered in DBRC, the dataset is allocated SHR.

SHR LEV

This is N if the dataset is not registered in DBRC. If registered in DBRC it is the DBRC share level of 0 through 3.

Terminating the Screen

Do one of the following to terminate the Data Base Dataset Specification screen:

- Press Enter to advance to the Data Base Extract - JCL Specification screen.
- Enter the END command to return to the Data Base Specification screen.
- Enter the RETURN command to return to the Primary Option Menu.

In all cases, any dataset names that you entered are saved.

Data Base Extract - JCL Specification

The Data Base Extract - JCL Specification screen, shown in Figure 6-9 on page 6-17, is used to specify the extract TO file dataset name, its attributes, and the extract job JCL information. This screen is displayed after the Data Base Dataset Specification screen for DLI extract job types and after the Data Base Extract Option Specification screen for BMP extract job types.

Figure 6-9. Data Base Extract - JCL Specification Screen

```
File-AID for IMS --  Data Base Extract - JCL Specification  -------------------
COMMAND ===>

Specify "TO" DSN below (file will be written in File-AID/IMS unload format):
"TO" dataset . . . . . . 'CW.FISAMP.UNLOAD'
     Member  . . . . . .            (Blank or pattern for member list)
     Volser  . . . . . .                     Password  . . . .
Dataset disposition  . . NEW        (NEW, SHR, or OLD)

If disposition is NEW, specify the following allocation parameters:
 Generic unit  . . . . . DISK
 Block size  . . . . . . 19069      (DSORG=PS,RECFM=VB,LRECL=168)
 Space units . . . . . . TRK        (BLK, TRK, or CYL)
 Primary Quantity  . . . 2          (in above units)
 Secondary Quantity  . . 1          (in above units)
--------------------------------------------------------------------------------
  JOB statement information:                Sysout class  . . *
 ===> //XXXXXXXA JOB (XXXX,CWX),'FILE-AID/IMS',CLASS=Y,REGION=2048K,
 ===> //   MSGCLASS=A,NOTIFY=XXXXXXX
 ===> /*ROUTE  PRINT LOCAL
 ===> //*

Press ENTER to submit batch job        Enter JCL command to edit generated JCL
```

TO Dataset

Enter the TO file dataset name. If you are extracting to an existing dataset, the name must conform to the characteristics for a valid extract TO file as described in “Extract TO/Load FROM File Dataset” on page 3-6.

Member

Enter the member name if the file is a partitioned dataset. If you leave this field blank, a member list is displayed. You can create new members by entering the name of the new member in the Member field or by selecting the new member on the Member List screen.

Volser

Displays the volume serial number of the disk or tape that contains the dataset.

Dataset Disposition

Enter SHR or OLD to allocate to existing datasets. Enter NEW to allocate new datasets. New datasets are created as sequential, variable length record, blocked files.

Generic Unit

Enter the device type where the new dataset is to reside. The names of these devices are somewhat installation dependent. Some common examples are DISK, TAPE, and 3380 devices.

Block Size

Enter the block size for the new dataset. Because the new dataset has variable length records and is blocked, the block size must be at least four bytes greater than the logical record length (the logical record length, LRECL, is shown to the right of the Block Size field).

The LRECL to be used is the sum of the following:

- The maximum segment length being unloaded
- The maximum concatenated key for the segments being unloaded
- A fixed size prefix of 28 bytes

The blocksize is taken from the screen. If the field is blank or the value is less than the LRECL + 4, the blocksize is set to LRECL + 4. These values are used for a new dataset. For an existing dataset, the LRECL and blocksize must be equal to or greater than the calculated values.

If you want to make the LRECL larger so that the dataset is usable for extracts of other databases, enter JCL on the command line and modify the LRECL, BLKSIZE, or both of the IXPTO dataset prior to submitting the job.

Space Units

Indicate whether the space for the new dataset is to be allocated in blocks (BLK), tracks (TRK), or cylinders (CYL). This field does not apply to extract datasets written to tape.

Primary Quantity

Enter the number of space units to be reserved for the new dataset. This field does not apply to extract datasets written to tape.

Secondary Quantity

Enter the number of space units to be allocated if the new dataset uses secondary extents. This field does not apply to extract datasets written to tape.

Job Statement Information

Enter the sysout class for the extract reports, the JOB statement, and other related JCL statements (for example, /*JOBPARM and /*ROUTE statements).

Terminating the Screen

Do the following to terminate the Data Base Extract - JCL Specification screen:

- Press Enter to generate the JCL, submit the extract job for execution, and return to the Data Base Extract - Data Base Specification screen.
- Enter the JCL command to advance to an ISPF/PDF Edit screen, where you can edit the generated JCL before submitting it. Refer to “Editing the Generated JCL” on page 6-18.
- Enter the END command to return to the Data Base Extract - Data Base Specification screen **without** submitting the extract job.
- Enter the RETURN command to return to the Primary Option Menu **without** submitting the extract job.

Editing the Generated JCL

If you entered the JCL command on the Data Base Extract - JCL Specification screen, an ISPF/PDF Edit screen similar to the one shown in Figure 6-10 on page 6-19 is displayed.

Figure 6-10. ISPF/PDF Edit Screen

```
ssssssssssssssssssssssssssssssssssssssssssssssssssssssssssssssssssssssssssssssss
EDIT       SYS04253.T101315.RA000.PFHCLK0.R0116098         Columns 00001 00072
Command ===>                                                  Scroll ===> CSR
****** ***************************** Top of Data ******************************
==MSG> -Warning- The UNDO command is not available until you change
==MSG>          your edit profile using the command RECOVERY ON.
000001 //XXXXXXXA JOB (XXXX,CWX),'FILE-AID/IMS',CLASS=Y,REGION=2048K,
000002 //   MSGCLASS=A,NOTIFY=XXXXXXX
000003 /*ROUTE  PRINT LOCAL
000004 //*
=NOTE= YOU ARE NOW EDITING THE JCL THAT FILE-AID HAS GENERATED TO PERFORM
=NOTE= THE REQUIRED FUNCTION.  YOU CAN CHANGE THIS JCL IF DESIRED, AND USE
=NOTE= THE SUBMIT PRIMARY COMMAND TO SUBMIT THE JOB.  TO KEEP THIS JCL FOR
=NOTE= FUTURE USE, USE THE CREATE OR REPLACE PRIMARY COMMAND.  ENTER THE
=NOTE= END COMMAND TO EXIT THE FUNCTION WITHOUT SUBMITTING THE JOB.
000005 //*-------------------------------------------------------------*
000006 //*   THIS STEP ALLOCATES TEMPORARY WORK DATASETS               *
000007 //*                                                             *
000008 //*-------------------------------------------------------------*
000009 //SRTGEN1  EXEC PGM=IEBGENER
000010 //SYSUT1   DD DUMMY,DCB=(RECFM=VB,LRECL=16,BLKSIZE=0)
000011 //SYSUT2   DD DSN=PFHCLK0.CW.FISAMP.UNLOAD.CK,
000012 //            UNIT=SYSDA,
```

At this point in the conversation, the ISPF/PDF editor has been invoked on the temporary dataset that contains the JCL generated to do the extract. All ISPF edit commands are available for use. For example, to insert additional JCL statements, use the I (Insert) line command. To change the JCL, type over the data. To delete a line, use the D (Delete) line command. You can use the CREATE and REPLACE primary commands to save the generated JCL into a partitioned (PDS) or sequential dataset, which enables you to submit the JCL in the future without using the online conversation screens.

Do the following after you view or edit the JCL:

- Enter the SUBMIT command to submit the extract job for execution. The Data Base Extract Report described on page 6-64 is generated.
- Enter the END or CANCEL command to return to the Data Base Extract - Data Base Specification screen.

Database Extract Function (Batch Stream)

The JCL shown in Figure 6-12 on page 6-21 through Figure 6-14 on page 6-23 can be coded and submitted to execute the extract process without invoking the online conversation. The required parameter information and DD statements are described following the JCL. To simplify the coding of this JCL refer to “Editing the Generated JCL” on page 6-18.

The batch job consists of the following steps:

1. SRTGEN1 - Allocate and initialize temporary dataset to-dataset-name.CK.
2. SRTGEN2 - Allocate and initialize temporary dataset to-dataset-name.XK.
3. SRTGEN3 - Allocate and initialize temporary dataset to-dataset-name.RK.
4. SRTKEY - (Optional) sort key file used to drive extract.
5. DBEXTRCT - Data Base Extract (IXPDTFDV)

Retrieves segments from the extract FROM database, applies selection criteria (if specified), applies application relationships (if specified), and writes the segment data, along with File-AID for IMS/ISPF prefix information, to the extract TO file.

6. DELETE - Deletes temporary datasets allocated in steps 1-3.
7. RPTSTATS - Data Base Extract Summary Reporting (IXPRPTDV)

   Writes a report that summarizes the results of the extract.

The datasets allocated and initialized in the first three steps of the extract job are used by IXPDTFDV as it processes logically related databases and application relationships. Database keys required to resolve these relationships are written to the file associated with the SORTIN02 DD statement. Database keys that have already been extracted are written to the SORTIN01 DD statement. IXPDTFDV calls DFSORT to determine which of the keys written to the SORTIN02 DD statement have not been processed. The result is written to the dataset associated with the SORTOUT DD statement. IXPDTFDV continues processing unresolved logical and application relationships until either the dataset associated with the SORTOUT DD statement is empty, or the chase limit set by the Number of Chase Cycles to Process parameter has been reached.

DFSORT is called using the parameters shown in Figure 6-11 on page 6-21. The VLSHRT option is required to allow DFSORT to process records in a variable blocked dataset that are shorter than the sort field. The DYNALLOC option will dynamically allocate an optimal number of SORTWRK datasets. You may chose to remove this option, however, an appropriate number of SORTWRK datasets must be allocated in the DBEXTRCT job step. All remaining sort parameters should not be modified, otherwise the DBEXTRCT step will not function properly.

Note that the lrecl parameters referenced in the JCL are computed by IXPDTFDV. The calculation is equal to the length of the longest concatenated key of all segments written to the extract dataset plus 11 bytes.

If a file containing database keys is to be used to drive a database extract, it should be sorted in ascending key sequence. JCL generated to by FileAID for IMS to execute an extract will include the step labeled SRTKEYS if a key input file is to be used. This step is not necessary if the file containing the keys is already in sort sequence. If this is the case, delete the SRTKEYS step from the generated JCL. If an unsorted key file is used to drive the extract, the file should contain no duplicates. If duplicate keys are present and the file is not in sort sequence, duplicate records will be extracted. This will cause errors when loading the extracted data into a database.

Extract JCL Conversion

The Extract JCL conversion process is outlined for users currently running Extract JCL in a production environment.

It is necessary to update the existing JCL to incorporate the changes for File-AID for IMS 7.1. This may be done by using the UPDTJCL CLIST Edit macro included in your File-AID for IMS/ISPF install library.

To update your existing Extract JCL:
Copy member UPDTJCL to a CLIST library allocated to your SYSPROC.

To Edit the current Extract JCL member and invoke the Edit Macro on the command line:
Type UPDTJCL.

The following changes will be added to your JCL:

- Three steps will be added prior to the Batch Extract step to allocate temporary work datasets.
- Sort DD information will be added to the Batch Extract step.

- One final step will be added after the Batch extract step to delete the temporary work datasets.

Notes:

1. If a key file is used as input a step to sort the key file in ascending sequence is needed prior to executing the extract step.

   This step will need to be manually added to your JCL.

2. This Edit Macro will not work on cataloged procedures that use symbolics for program IXPDTFDV or the IXPTO DD information.

Figure 6-11. DFSORT Parameters

```
VLSHRT,DYNALLOC
MSGDDN=SORTMSG
OUTFIL FILES=OUT
RECORD TYPE=V, LENGHT=(lrecl,lrecl,lrecl)
SORT  FIELDS=(6,LRECL-9,CH,A,5,1,CH,A)
```

Note: In the following JCL example, all database dataset names were not obtained from the IMS Dynamic allocation source.

Figure 6-12. Extract JCL-1, Part 1

```
//*-----------------------------------------------------------------*
//*   THIS STEP ALLOCATES TEMPORARY WORK DATASETS                   *
//*                                                                 *
//*-----------------------------------------------------------------*
//SRTGEN1  EXEC PGM=IEBGENER
//SYSUT1   DD DUMMY,DCB=(RECFM=VB,LRECL=LRECL,BLKSIZE=0)
//SYSUT2   DD DSN=to-dataset-name.CK,
//            DCB=(RECFM=VB,LRECL=LRECL,BLKSIZE=0,BUFNO=20),
//            SPACE=(unit,(primary,extent)),
//            DISP=(NEW,CATLG,DELETE)
//SYSPRINT DD SYSOUT=X
//SYSIN    DD DUMMY
//*
//SRTGEN2  EXEC PGM=IEBGENER
//SYSUT1   DD DUMMY,DCB=(RECFM=VB,LRECL=LRECL,BLKSIZE=0)
//SYSUT2   DD DSN=to-dataset-name.XK,
//            DCB=(RECFM=VB,LRECL=LRECL,BLKSIZE=0,BUFNO=20),
//            SPACE=(unit,(primary,extent)),
//            DISP=(NEW,CATLG,DELETE)
//SYSPRINT DD SYSOUT=X
//SYSIN    DD DUMMY
//*
//SRTGEN3  EXEC PGM=IEBGENER
//SYSUT1   DD DUMMY,DCB=(RECFM=VB,LRECL=LRECL,BLKSIZE=0)
//SYSUT2   DD DSN=to-dataset-name.XK,
//            DCB=(RECFM=VB,LRECL=LRECL,BLKSIZE=0,BUFNO=20),
//            SPACE=(unit,(primary,extent)),
//            DISP=(NEW,CATLG,DELETE)
//SYSPRINT DD SYSOUT=X
//SYSIN    DD DUMMY
//*
//SORTKEYS  EXEC PGM=SORT
//STEPLIB  DD DSN=sort-loadlib,DISP=SHR
//SYSOUT   DD SYSOUT=sysout-class
//SORTIN   DD DSN=key-file-dataset,DISP=SHR
//SORTOUT  DD DSN=&&IXPIN,
//             UNIT=temporary-unit,
//             SPACE=(CYL,(primary,extent)),
//             DCB=*.SORTIN,
//             DISP=(NEW,PASS)
//SYSIN    DD *
sort-parameters
```

Figure 6-13. Extract JCL-1, Part 2

```
//*-----------------------------------------------------------------*
//* DATA BASE EXTRACT:                                              *
//*   THIS STEP EXTRACTS DATA BASE SEGMENTS FROM AN IMS             *
//*   DATA BASE AND CREATES A FILE.                                 *
//*                                                                 *
//*-----------------------------------------------------------------*
//DBEXTRCT EXEC PGM=IXPDTFDV,
//  PARM=' parameter information '
//STEPLIB  DD DSN=ims-reslib-dataset-name,
//            DISP=SHR
//         DD DSN=File_AID-load-lib,
//            DISP=SHR
//*
//DFSRESLB DD DSN=ims-reslib-dataset-name,
//            DISP=SHR
//*
//IXPD1    DD DSN=dbdlib-dataset-name,
//            DISP=SHR
//*
//IMS      DD DSN=psblib-dataset-name,
//            DISP=SHR
//IEFRDER  DD DUMMY
//DFSVSAMP DD DSN=dfsvsamp-pds(member),
//            DISP=SHR
//*
//IXPMLIB  DD DSN=File-AID-message-lib,
//            DISP=SHR
//*
//SYSOUT   DD SYSOUT=output-class
//SYSPRINT DD DUMMY,
//            DCB=(RECFM=FBA,LRECL=121,BLKSIZE=18997)
//*
//IXPSTATS DD DSN=&&IXPSTATS,
//            UNIT=SYSDA,
//            SPACE=(6160,(10,5),RLSE),
//            DCB=(DSORG=PS,RECFM=FB,LRECL=80,BLKSIZE=6160),
//            DISP=(NEW,PASS)
//*
```

Figure 6-14. Extract JCL-1, Part 3

```
//*-----------------------------------------------------------------
//* All database dataset names were not obtained from the IMS
//* dynamic allocation source, therefore the DD statements
//* for the databses are included in this JCL.
//*-----------------------------------------------------------------
//IXPIMBED DD DUMMY
//**IXPIMSDY DD DUMMY
//*-----------------------------------------------------------------
//dbdd1    DD DSN=database-dataset-1,
//            DISP=SHR
//dbdd2    DD DSN=database-dataset-2,
//            DISP=SHR
//dbdd3    DD DSN=database-dataset-3,
//            DISP=SHR
//IXPTO    DD DSN=to-dataset-name,
//            DCB=(RECFM=recfm,LRECL=lrecl,BLKSIZE=blksize),
//            UNIT=permanent-device,
//            SPACE=(blksize,(10,1),RLSE),
//            DISP=(NEW,CATLG)
//*
//SYSIN    DD *,DCB=BLKSIZE=80
,0000,,,,,,,,N,N,,Y,,
/*
//SORTMSG  DD SYSOUT=(X),
//            DCB=(RECFM=FBA,LRECL=121,BLKSIZE=0)
//SORTIN   DD DSN=to-dataset-name.RK,
//            DISP=SHR,
//            DCB=BUFNO=20
//         DD DSN=to-dataset-name.XK,
//            DISP=SHR,
//            DCB=BUFNO=20
//SORTIN01 DD DSN=to-dataset-name.XK,
//            DISP=MOD,
//            DCB=BUFNO=20
//SORTIN02 DD DSN=to-dataset-name.RK,
//            DISP=SHR,
//            DCB=BUFNO=20
//SORTOUT  DD DSN=to-dataset-name.CK,
//            DISP=SHR,
//            DCB=BUFNO=20
//DFSPARM  DD *
 OPTION VLSHRT,DYNALLOC
 MSGDDN=SORTMSG
 OUTFIL FILES=OUT
 RECORD TYPE=V,LENGTH=(lrecl,lrecl,lrecl)
 SORT  FIELDS=(6,lrecl-9,CH,A,5,1,CH,A)
//*-----------------------------------------------------------------*
//*   THIS STEP DELETE TEMPORARY WORK DATASETS                      *
//*                                                                 *
//*-----------------------------------------------------------------*
//DELETE   EXEC PGM=IEFBR14,COND=(EVEN)
//SORTOUT  DD DSN=userid.CCC.CK,
//            DISP=(MOD,DELETE,DELETE)
//SORTIN01 DD DSN=userid.CCC.XK,
//            DISP=(MOD,DELETE,DELETE)
//SORTIN02 DD DSN=userid.CCC.RK,
//            DISP=(MOD,DELETE,DELETE)
//*----------------------------------------------------------------*
//* DATA BASE EXTRACT SUMMARY REPORTING:                           *
//*   THIS STEP PRODUCES THE DATA BASE EXTRACT SUMMARY REPORT.     *
//*----------------------------------------------------------------*
//RPTSTATS EXEC PGM=IXPRPTDV,
//            COND=(EVEN),
//            PARM=' parameter information '
//STEPLIB  DD DSN=File-AID-load-lib,
//            DISP=SHR
//IXPSTATS DD DSN=&&IXPSTATS,
//            DISP=(OLD,DELETE,DELETE)
//IXPD1    DD DSN=dbdlib-datase-name,
//            DISP=SHR
//IXPMLIB  DD DSN=File_AID-message-lib,
//            DISP=SHR
//SYSOUT   DD SYSOUT=output-class
//
```

Note: If the database dataset names were obtained from the IMS dynamic allocation source, the highlighted text from Figure 6-14 would be replaced with the following:

```
//*-----------------------------------------------------------------
//* All database dataset names were obtained from the IMS dynamic
//* allocation source; these dataset names are included here as
//* comments only. When this JOB is executed, the current dataset
//* names will be obtained and the dataset will be dynamically
//* allocated.
//*-------------------------------------------------------------------
//IXPIMSDY  DD DUMMY
//**IXPIMBED DD DUMMY
//*-------------------------------------------------------------------
```

The parameter information in the PARM field on the EXEC statement for the DBEXTRCT step must have the following format:

Table 6-3. EXEC Statement PARM Field - DBEXTRCT Step

Description	Value	Start Posn	End Posn
Constant	/N	1	2
Primary DBD name	name of primary DBD	3	10
Selection Criteria Usage	E or N	11	11
Constant	DTF	12	14
Extract Job Type	DLI or BMP	15	19
Application Group Name	enter if required (BMP only)	20	27
CICS/IMS System	enter if BMP job type	28	31
Use Application Relationships	Y or N	32	32
IMS Version/Release	version/release number	33	37
PSB/ACB Name	For static PSB only	38	45
PCB Number	PCB number within PSB (static PSB only)	46	50
Extract based on key values	Y or N	51	51
PSB Type	S for Static PSB D for Dynamic PSB	52	52
Number of Chase Cycles to Process	0 indicates no limit, a value of 1 to 9999 sets a limit.	53	56

In the example below, a BMP extract job is run against the DBD PORDR with an Application Group Name of TESTIMS to select the BMP environment, an IMS System mnemonic of TEST. Existing selection criteria and application relationships are applied.

```
// PARM='/NPORDR   EDTFBMP  TESTIMS TESTY06100D0000'
```

The following DD statements are required for the DBEXTRCT step::

Table 6-4. DBEXTRCT DD Statements

DD Statement	Description
PROCLIB DFHESL	When you specify the SSM IMS parameter on either a DL/I or BMP parameter string, the system attempts to allocate appropriate datasets to the PROCLIB and DFHESL ddnames for use during edit and browse sessions. In addition, JCL that executes DL/I or BMP jobs contains the appropriate concatenations of these ddnames.
IXPIMBED	Allocate this DD to DUMMY to indicate to File-AID for IMS that all database dataset names are imbedded in the JCL.
IXPIMSDY	Allocate this DD to DUMMY to indicate to File-AID for IMS that all database dataset names are to be obtained from the IMS dynamic allocation source.

Table 6-4. DBEXTRCT DD Statements

DD Statement	Description
STEPLIB	Designates the IMS system datasets that contains the IMS nucleus, required action modules, and the library where the File-AID for IMS/ISPF load modules are stored.
DFSRESLB	Designates the IMS system datasets that contain the IMS nucleus and required action modules.
IXPD1	Designates the DBD load library datasets that contain the DBD members that describe the databases.
IMS	Designates the PSB load library datasets that contain the PSB member that describes the databases (static PSB only).
IEFRDER	Designates the IMS log dataset. This DD is not required for BMP extract job types. The extract job does not do updates; therefore, a log is not required to record the updates. If using a dynamic PSB, the DD is generated as DD DUMMY. If using an existing PSB, the generated JCL provides a temporary dataset. Although there are no updates, IMS requires that a dataset be present for the IEFRDER DD if using DBRC and the PSB has any update capability.
DFSVSAMP	The dataset that contains the control statements that describe the buffer pools used by IMS. This DD is not required for BMP extract job types.
IXPMLIB	The library that contains File-AID for IMS/ISPF messages.
SYSOUT	The output class for possible error messages.
SYSPRINT	Must be DUMMY, with the DCB coded as shown.
IXPSTATS	The temporary dataset used as input to the RPTSTATS step to create the extract summary report.
DB datasets	These DDs are not required for BMP extract job types. For DLI job types, the DD statements are either included as actual DD statements or they are included as comments. If all the database dataset names were obtained from the IMS dynamic allocation source, then a DD DUMMY statement with DD name IXPIMSDY is included to indicate this. The DD statements for the database datasets are included as comments only. When the JCL is submitted, the current datasets will be dynamically allocated by File-AID for IMS using the IMS dynamic allocation source to obtain the names. If all the dataset names were not obtained from the IMS dynamic allocation source, then the IXPIMSDY DD statement is included as a comment only and the database dataset DD statements are included as true DD statements.
IXPTO	The extract TO dataset (and member, if required).
SYSIN	The DL/I parameters passed to DFSRRC00 as specified in Option 0.3, IMS Parameters.
SORTMSG	DD statement for messages written when DFSSORT is called by IXPDTFDV.
SORTIN	Input DD statement for used by DFSSORT.
SORTIN01	Input DD statement for used by DFSSORT.
SORTIN02	Input DD statement for used by DFSSORT.
SORTOUT	Input DD statement for used by DFSSORT.
DFSPARM	DFSSORT parameters.
COBOUT	Dataset to write COBOL Extract File Prefix layouts used in File-AID/MVS XREF. If this DD is present the COBOL prefix layouts will be written to it.
PLIOUT	Dataset to write PL/I Extract File Prefix layouts used in File-AID/MVS XREF. If this DD is present, the PL/I prefix layouts will be written to it.

The parameter information in the PARM field on the EXEC statement for the RPTSTATS step must have the following format:

Table 6-5. EXEC Statement PARM Field - RPTSTATS Step

Description	Value	Start Posn	End Posn
Constant	/N	1	2
Maximum Print Lines Per Page	20 to 99	3	4
Spacing Before Detailed Headers	1 to 5, or T	5	5
Data Format	E, D, or M	6	6
Terminal Type		7	14

The Maximum Print Lines Per Page and Spacing Before Detailed Headers parameters are common report parameters that are explained more fully in “Specify print parameters” on page 2-5.

Data format values of D and M are valid only for Double-Byte Character Set (DBCS) support.

The Terminal Type is used to determine the correct character set for the terminal and should be the same as that defined in ISPF Option 0.1 (ISPF Terminal Characteristics).

The following DD statements are required for the RPTSTATS step:

Table 6-6. RPTSTATS DD Statements

DD Statement	Description
STEPLIB	The dataset where the File-AID for IMS/ISPF load modules reside.
IXPSTATS	The temporary dataset, passed from the DBEXTRCT step, that contains statistics used for reporting purposes.
IXPMLIB	The library that contains File-AID for IMS/ISPF messages.
SYSOUT	The output class for the extract summary report.
IXPD1	The DBD load library datasets that contain the DBD members that describe the databases.

An extract execution return code (RC) appears in the extract output listing. For return code 16 an error code and message that indicate the specific problem also appears in the listing. In general, the return codes can be summarized as follows:

```
RC   Explanation                Description
0    job ran to completion      none
4    job ran to completion      none
16   job aborted; severe error  input or system error
```

The File-AID/MVS Copy step copies the xrefs that are to be converted to a temporary dataset that is used in the Convert step to convert the copied XREF's to a File-AID/MVS XREF. Refer to the File-AID Batch Reference Manual for more information about the File-AID/MVS Copy and Convert.

Extract File Contents

The TO file produced by the batch extract job is in File-AID for IMS’s unload format. The file consists of one header record, a DBD record if application relationships were applied, and data records for each segment extracted. Figure 6-15 on page 6-27 shows an example of the contents of an extract file in hexadecimal format.

Figure 6-15. Extract File Contents - Hexadecimal Format

```
BROWSE -- CW.FISAMP.EXT -----------------------------------------------------
COMMAND ===>
....IXP04.06.00YPREFIX LENGTH= 42 MAX ROOT KEY LENGTH= 6
0000CEDFF4FF4DDDCCCE4DCDCEC744FF4DCE4DDDE4DCE4DCDCEC744F4444444444444444444444
000097703B10057956970355738E0042041709663025803557 38E006000000000000000000000
--------------------------------------------------------------------------------
....DBDPPART
0000CCCDDCDE4444444444444444444444444444444444444444444444444444444444444444
000042477193000000000000000000000000000000000000000000000000000000000000000
--------------------------------------------------------------------------------
........PORDR ..ORDR010 ..AA4444   AA4444HIGH PERFORMANCE COAX
00000000DDDCD44400DDCDFFF400CCFFFF44444444CCFFFFCCCC4DCDCDDDCDCC4CDCE44444444444
0101000176949000016949010000114444000000001144448978075966941535036170000000000
--------------------------------------------------------------------------------
........PORDR ..ORDR020 ..AA444401 ..01POOPEN   C33333COAXIAL C       ABLE - GRE
00000000DDDCD44400DDCDFFF400CCFFFFFF4444440BFFDDDDCD444CFFFFFCDCECCD4CCCDC464CDC
0101000276949000026949020000114444010000000201766755000333333361791303123500079 5
--------------------------------------------------------------------------------
........PORDR ..ORDR030 ..AA44440101 01QA.. ... .OKGRINDING            198802141
00000000DDDCD44400DDCDFFF400CCFFFFFFFF4444FFDC00400040DDCDCDCCDC4444444FFFFFFFF
0101000376949000036949030000114444010100000181020C020C627995495700000001988021 41
--------------------------------------------------------------------------------
........PORDR ..ORDR030 ..AA44440104 04WA........BDFINISHING           19880902
```

The header record, which is the first record in the file, contains the product code and version, a one-byte load indicator, the prefix length, and the maximum root key length for the FROM database. This information is used during the Data Base Load function.

The prefix length is the length of the File-AID for IMS control information that is at the front of each data record in the file. The database segment data begins immediately after the prefix in each extract record. The maximum root key length is the length of the longest key for the root segments of all databases participating in the extract. For further information on the contents and layout of this file, refer to “Advanced Topics” on page 6-54.

If application relationships are applied, the second record is the DBD record. The DBD record contains the DBD names of application related databases.

Database Load Function (Online Conversation)

The Data Base Load function consists of an online conversation and a batch job stream. The online screens prompt you for the information needed to submit the batch job to do the actual load.

The online conversation has a sequence of screens where you can do the following:

1. Specify the job type of the load job (DLI or BMP).
2. Specify the processing options to use (Load, Insert or Update).
3. Specify the dataset name of the load FROM file.
4. Specify the PSB containing the PCB to be used for the load (static PSB only).
5. Specify the DBD for the load TO database.
6. Specify the dataset names of the TO database (DLI region only).
7. Specify the JCL information.
8. Optionally edit the JCL generated by File-AID for IMS to perform the load.

Depending on the processing option used and whether secondary indexes and/or logical relationships are present, the batch job consists of three to nine steps. The main steps of the batch job perform the following actions:

- Sorts the records in the load FROM dataset into the proper load sequence.
- Reads the records from the sorted FROM file, strips off the File-AID for IMS prefix information, and inserts the segments into the TO database.
- Writes a report that summarizes the results of the load.

Data Base Load - Dataset Specification

The Data Base Load - Dataset Specification screen is the first screen displayed upon entry to the Data Base Load sub-option. There are two variations of this screen depending on whether you intend to use dynamic or static PSBs. You can enter the XPSB command on either screen to switch to the alternate screen. Figure 6-16 is displayed if you entered **D** in the Dynamic or Static field on the System Parameters screen. Figure 6-17 on page 6-31 is displayed if you entered **S**.

Dynamic PSB

Figure 6-16. Data Base Load - Dataset Specification (Dynamic PSB) Screen

```
File-AID for IMS  --  Data Base Load - Dataset Specification  (Dynamic PSB) --
COMMAND ===>
ENV: DEVO - DEVLP  PLAIN     DEVELOPMENT NO CUSTOMIZATION

               Load job type  . . DLI        (DLI or BMP)  BMP AGN = IMS6RACF

           Processing option  . . L          (L=Load and initialize database
                                              I=Insert segments only
                                              U=Update and/or insert segments)

Specify "FROM" dataset below (file must be in File-AID/IMS unload format):

              "FROM" Dataset  . . ROYER
                      Member  . .            (Blank or pattern for member list)
                      Volser  . .             Password  . .

Specify the DBD for the "TO" data base:

         + DBDLIB Dataset 1  . . FISAMP.DBDLIB
                  Dataset 2  . .
                     Member  . .            (Blank or pattern for member list)

--------------------------------------------------------------------------------
```

Load Job Type

Enter one of the following:

DLI The load job is submitted to run as an IMS batch DLI application. The TO database and all its related databases must either be offline from IMS DC and CICS regions or available for update (insert or load) under IMS data sharing (DBRC and IRLM).

BMP The load job is submitted to run as an IMS BMP application. The TO database and all its related databases must be online to the IMS DC or DBCTL region.

You must run the loading of a FAST PATH database as a BMP job. If a DEDB database has multiple areas and some areas are down, File-AID for IMS skips over the down areas and continues processing.

DLI Processing Option

This field is used to control how File-AID for IMS updates the database. Enter one of the following:

L Initializes the TO database and loads the segments into the empty database. This process is done by using the IMS load PROCOPT. The primary database and all its related databases must be in an uninitialized state to use a processing option of L.

I Inserts the segments into an already initialized database. If a segment being inserted already exists, the segment is not inserted, and a message is written to an exception report (refer to “Database Load Reports” on page 6-69).

U Similar to I except that existing segments are replaced with the new data. Uninitialized databases, HSAM databases, and SHSAM databases cannot be loaded using processing option I or U.

FROM Dataset

The name of the dataset that contains the data you want loaded (that is, the FROM file). This file must be in File-AID for IMS unload format as created by the Extract function (Option 4.1).

Member

If the FROM file is a partitioned dataset (PDS), enter the member that contains the data you want loaded. If the Member field is left blank for a PDS, a member list is displayed.

Volser

The volume serial number of the disk or tape that contains the dataset.

Password

Enter the password if the FROM dataset is password protected.

DBDLIB Dataset 1 and Dataset 2

Enter one or two DBD load library dataset names. If you enter two DBD load library dataset names and their blocksizes are different, you must enter the library with the larger blocksize on the first dataset name line.

Member

Enter the DBD member that describes the database that you want to load (that is, the TO database). When two DBD libraries are entered, File-AID for IMS searches the first before the second to locate the DBD member. The DBD member entered must describe a physical database. Logical and index DBDs are not supported in the Load function.

Terminating the Screen

Do one of the following to terminate the Data Base Load - Dataset Specification screen:

- Press Enter.
  - If the FROM file is a partitioned dataset and you left the Member Name field blank, the next screen displayed is a Member List. Either select a member name from the member list and press ENTER or enter the END command to return to the Data Base Load - Dataset Specification screen.
  - If the DBD Member field was left blank, the next screen displayed is a DBD Member List. If two DBD library dataset names were entered, the member list is a merged and sorted list of members in both datasets. Either select a member from the member list and press Enter or enter the END command to return to the Data Base Load - Dataset Specification screen.
  - If the FROM dataset resides on a tape, the Data Base Load - Application Relationship Option screen shown on page 6-33 is displayed. For datasets that reside on tape, you must specify the application relationships, if applied in the extract process, and the name of the application relationship dataset used. This information is used to retrieve the DBD names used in the application relationships. If the FROM dataset does not reside on tape, File-AID for IMS/ISPF reads the extract file to determine whether to use application relationships and associated DBD names in the Load function.

  If the above do not apply (or are not performed), the next screen displayed depends on the IMS region type used.

  - If using a DLI region type, the Data Base DLI/Log Usage screen displays.

– If using a BMP region type, the BMP Region Selection screen displays.

- Press END to return to the Extract/Load Data Base Menu or the Primary Option Menu (depending on where you started the conversation).

Static PSB

Figure 6-17. Data Base Load - Dataset Specification Screen (static)

```
File-AID for IMS  --  Data Base Load - Dataset Specification  (Static PSB) --
COMMAND ===>
                                .
              Load job type  . . DLI        (DLI or BMP)  BMP AGN =

          Processing option  . . U          (L=Load and initialize database
                                             I=Insert segments only
                                             U=Update and/or insert segments)

Specify "FROM" dataset below (file must be in File-AID/IMS unload format):

             "FROM" Dataset  . . 'CW.FISAMP.UNLOAD'
                     Member  . .            (Blank or pattern for member list)
                     Volser  . .             Password  . .

Specify the libraries for the "TO" data base:

         + PSBLIB Dataset 1  . . 'CW.FISAMP.PSBLIB'
                  Dataset 2  . .
                     Member  . . IXPPSBSA   (BLANK OR PATTERN FOR MEMBER LIST)

         + DBDLIB Dataset 1  . . 'CW.FISAMP.DBDLIB'
                  Dataset 2  . .
                     Member  . . PORDR      (Blank to select from list in PSB)
```

Load Job Type

Enter one of the following:

DLI The load job is submitted to run as an IMS batch DLI application. The TO database and all its related databases must either be offline from IMS DC and CICS regions or available for update (insert or load) under IMS data sharing (DBRC and IRLM).

BMP The load job is submitted to run as an IMS BMP application. The TO database and all its related databases must be online to the IMS DC or DBCTL region.

You must run the loading of a FAST PATH database as a BMP job. If a DEDB database has multiple areas and some areas are down, File-AID for IMS skips over the down areas and continues processing.

DLI Processing Option

This field is used to control how File-AID for IMS updates the database. Enter one of the following:

L Initializes the TO database and loads the segments into the empty database. This process is done by using the IMS load PROCOPT. The primary database and all its related databases must be in an uninitialized state to use a processing option of L.

I Inserts the segments into an already initialized database. If a segment being inserted already exists, the segment is not inserted, and a message is written to an exception report (refer to "Database Load Reports" on page 6-69).

U Similar to I except that existing segments are replaced with the new data. Uninitialized databases, HSAM databases, and SHSAM databases cannot be loaded using processing option I or U.

FROM Dataset

The name of the dataset that contains the data you want loaded (that is, the FROM file). This file must be in File-AID for IMS unload format as created by the Extract function (Option 4.1).

Member

If the FROM file is a partitioned dataset (PDS), enter the member that contains the data you want loaded. If the Member field is left blank for a PDS, a member list is displayed.

Volser

The volume serial number of the disk or tape that contains the dataset.

Password

Enter the password if the FROM dataset is password protected.

PSBLIB Dataset and Dataset 2

Enter one or two PSB library names.

Member

Enter the PSB to be used for the load. This PSB must contain all the PCBs with the necessary processing options required to perform the load. See "PCBs Used for the Load Function" on page 6-36 for information on PCBs required to perform a load. Leave Member blank to select the PSB from the list of PSBs.

DBDLIB Dataset 1 and Dataset 2

Enter one or two DBD load library dataset names. If you enter two DBD load library dataset names and their blocksizes are different, you must enter the library with the larger blocksize on the first dataset name line.

Member

Enter the member that describes the database that you want to load (that is, the TO database). The DBD member entered must describe a physical database. Logical and index DBDs are not supported. Leave Member blank to select the DBD from the list of DBDs in the PSB.

Terminating the Screen

Do one of the following to terminate the Data Base Load - Dataset Specification screen:

- Press Enter.
  - If the FROM file is a partitioned dataset and you left the Member Name field blank, the next screen displayed is a Member List. Either select a member name from the member list and press ENTER or enter the END command to return to the Data Base Load - Dataset Specification screen.
  - If the FROM dataset resides on a tape, the Data Base Load - Application Relationship Option screen shown on page 6-33 is displayed. For datasets that reside on tape, you must specify the application relationships, if applied in the extract process, and the name of the application relationship dataset used. This information is used to retrieve the DBD names used in the application

relationships. If the FROM dataset does not reside on tape, File-AID for IMS/ISPF reads the extract file to determine whether to use application relationships and associated DBD names in the Load function.

- When all information is entered, the next screen displayed is the Load DBD Selection List for the PSB screen (Figure 6-19 on page 6-34).
- Use END to return to the Data Base Load - Dataset Specification screen (Figure 6-17 on page 6-31).

Tape Input Application Relationship Screen

This screen is only displayed if your input dataset resides on a TAPE device.

Figure 6-18. Data Base Load - Application Relationship Option Screen

```
File-AID for IMS ---- Data Base Load - Application Relationship Option --------
COMMAND ===>

Use application relatnships ===>      (Y = Yes; N = No)

+  Appl relationship dataset(s) ===>

 Note: An application relationship is a File-AID for IMS defined relationship
       between one segment and the root segment of another data base.  If
       this relationship is used in extracting, the extract file may contain
       records for these related data bases.  Since your extract file is on
       tape, File-AID for IMS cannot read this file on-line to determine which
       data base datasets are required for your load.  If you used Application
       Relationships during your Extract, specify Yes and the name of the
       Application Relationship dataset so that File-AID for IMS can prompt
       you for all data base datasets that you may have extracted from.  Some
       data bases that you have excluded relationships to during the extract
       may not be needed for this load.  You may use DUMMY for those data
       bases on the Data Base Dataset Specification screen.


 Press Enter after application relationship fields are specified
 Enter END command to return to the Dataset Specification Screen
```

Terminating the Screen

Do one of the following to terminate the screen:

- Press Enter again to advance to the next screen in the conversation. If you are using a static PSB, the Load Selection List for PSB screen is displayed (see Figure 6-19 on page 6-34). If not, the Processing Options screen appropriate to the region you selected is displayed.

  DLI The Figure 6-21 on page 6-38 is displayed.

  BMP The Figure 6-26 on page 6-43 is displayed.

- Enter the END command to return to either the Extract/Load Data Base Menu or the Primary Option Menu. The screen you return to is determined by where you started the conversation.
- Enter the RETURN command to return to the Primary Option Menu.

Load DBD Selection List for PSB (Static PSB Only)

At this point the PSB and its library have been specified. If the load DBD is logically (or application) related to another DBD, you will need a PCB in the PSB to provide access to this database. File-AID for IMS determines what PCBs can be used for access to logically (or application) related databases. The first acceptable PCB is always used.

Refer to Figure 6-20 on page 6-37 for an example of the screen that is displayed when using a static PSB and application relationships. Refer to "Terminating the Screen" on page 6-37 for more information on requirements and implications of the PCBs used for the load.

The following screen has two major functions depending on whether or not a DBD member name was specified on the Data Base Load - Data Specification screen:

1. If the member name was NOT provided, then the initial purpose of this screen is to select the PCB/DBD combination to use for the load. All PCBs for the PSB will be displayed.
2. If a member name was provided, then the initial purpose of this screen is to set an S in the Line Cmd for the PCB/DBD combination selected by File-AID for IMS for the load.

   In either of the above cases, the screen will also indicate which PCBs will be used to access the logically related DBDs, if any. The REL-DBD column is set to L for each such PCB.

Note: All PCBs for the PSB will be displayed. The DBD should be the same one you used when you did the extract that generated the input file.

Figure 6-19. Load DBD Selection List for PSB

```
File-AID for IMS  -  Load DBD Selection List for PSB EXTSAMP - LINE  -------
COMMAND ===>                                                   SCROLL ===>
-------------------------------------------------------------------------
                     Log  Pcb    Segments             PCB   Segment  Secondary
Line   DBD     REL  Phy  Err    in    in     PCB     Proc   Proc    Processing
Cmd    Name    DBD  DBD  Msg   PCB    DBD   Label    OPT    Opts    Sequence
---  --------  ---  ---  ----  ----------  --------  ----  -------  --------
 S   PRODR      -   PHY          5 OF 5    PORDRA    A      =PCB
 _   PCUST      L   PHY          3 OF 3    PCUSTA    A      =PCB
 _   PPART      -   PHY          2 OF 2    PPARTA    A      =PCB
     *END*






S Selects the PCB to be used for the Load function
H Graphically displays the Hierarchical structure of the DBD
When PCB selected, REL-DBD shows PCBs used for logically related DBDs
Press ENTER without changing screen to proceed when DBD is selected
Use END to return to Data Base Specification screen
```

Line Cmd

Enter the S line command to select one PCB to be used to access the load database. The H line command can be used to graphically display the hierarchical structure of the DBD.

DBD Name

DBD name specified in the PCB statement. Only physical DBDs are supported for extract and load. Logical and index DBDs cannot be used.

REL DBD

Indicates which PCBs will be used to access the related databases. An L in this column indicates a PCB to be used for a related DBD.

Log Phy DBD

Indicates whether this is a physical, logical or index DBD. Only physical DBDs can be used for extract.

PCB Err Msg

Some PCBs may not be usable for a load function. For example, if the PCB Processing Option is G, this PCB does not have the required option for load in load mode. If the PCB is not usable, the appropriate error message number is displayed. Selecting a PCB which has a PCB Err Msg will cause the short message to be displayed; press <PF1> to display the full message.

Segments in PCB and in DBD

Displays the number of segments in the DBD and the PCB. If the number of segments in the PCB is less than the number in the DBD, the PCB is not sensitive to all of the segments in the DBD. The segments to which the PCB are not sensitive will not be loaded.

PCB Label

In the IMS PSB, the PCB for each DBD can be assigned a label. If a label was provided, it is displayed here. This may be particularly useful when the same DBD is included in the PSB more than once. In this instance, the label can be used to indicate the specifics of each entry.

PCB Proc OPT

Identifies the value for PROCOPT on the PCB statement. This reflects the IMS functions which are valid when using this PCB. File-AID for IMS examines this to determine if the PCB has the required processing option to support the requested function.

Segment Proc Opts

Indicates whether the processing options (PROCOPTS) for each of the segments in the PCB are the same as the processing options for the PCB.

Second Processing Sequence

Indicates the secondary index processing sequence in use for the PCB. PCBs which use a secondary processing sequence cannot be used for extract or load.

Terminating the Screen

After selecting the PCB with the S Line Cmd, the Load DBD Selection List screen is displayed again so you can see the PCBs which will be used to access the logically related databases.

Do the following to terminate this screen:

- Press Enter.

  If there were application related DBDs used at extract, the Display PCBs for Related DBDs screen (Figure 6-20 on page 6-37) will open. Otherwise, the Processing Options screen appropriate to the region you selected is displayed.

- Use END to return to the Data Base Load - Dataset Specification screen.

PCBs Used for the Load Function

The load function may be performed in load, insert, or update mode. When doing a load in any mode, the PCB must be sensitive to the root, but need not be sensitive to any of the dependent segments. Any segment to which the PCB is not sensitive will not be loaded. If the PCB is not sensitive to some segments, a warning message is provided in the screen processing phase. If the target of a pointer segment, either a logical child or an application relationship pointer, is loaded but the corresponding target segment is not loaded because it was not extracted or the load PCB is not sensitive to the target, an invalid database may result (in load mode only).

If loading in load mode, each PCB used must have a processing option of L (for load). If loading in insert or update mode, all sensitive segments must have get, insert, and replace processing options, except for a DEDB sequential dependent which cannot have replace processing options.

Suggested PSB to be Used for Load

If loading in load mode, you must have a PSB which has a PCB with L processing option for the load database and all related databases.

If loading in insert or update mode, you must have a PSB which includes a PCB for the load database and a PCB for all related databases. For the PCB to be usable, all sensitive segments must have get, insert and replace processing options. (An exception is a DEDB sequential dependent which cannot have replace processing options.) The PCB need not be sensitive to all segments. Segments to which the PCB is not sensitive will not be processed. If the PSB used for the extract has insert and replace processing options, you can use the same PSB to perform the load.

Display PCBs for Related DBDs

This screen, shown in Figure 6-20 on page 6-37, is only displayed if you are using a static PSB and application relationships. In this case, one or more PCBs is required to access the application related DBDs and any DBD logically related to the application related DBDs. The purpose for this screen is to show which PCBs will be used to access the application related DBDs and DBDs logically related to them. The REL-DBD column contains an L for PCBs to be used for logically related databases and an A for PCBs to be used for application related DBDs. The format of this screen is similar to the Extract DBD Selection List for PSB screen shown in Figure 6-4 on page 6-7.

Note that the use of application relationships for load is determined from the input dataset. The second record of the input dataset is a list of the application related database used for the extract.

Figure 6-20. Display PCBs for Related DBDs

```
File-AID for IMS  -  Display PCBs for Related DBDs - PSB EXTSAMP - LINE -------
COMMAND ===>                                                   SCROLL ===>
-------------------------------------------------------------------------

                     Log  Pcb    Segments             PCB   Segment  Second
Line   DBD     REL  Phy  Err    in    in     PCB     Proc   Proc    Processing
Cmd    Name    DBD  DBD  Msg   PCB    DBD   Label    OPT    Opts    Sequence
---  --------  ---  ---  ----  ----------  --------  ----  -------  --------
 S   PRODR      -   PHY          5 OF 5    PORDRA    A      =PCB
 _   PCUST      L   PHY          3 OF 3    PCUSTA    A      =PCB
 _   PPART      A   PHY          2 OF 2    PPARTA    A      =PCB
     *END*

Press ENTER to continue
Use END command to return to Data Base Selection screen
```

Terminating the Screen

Do one of the following to terminate screen:

- Press Enter to advance to the next screen.

  The next screen that displays depends on the IMS region type used.

  If using a DLI region type, the Data Base DLI/Log Usage screen displays. If using a BMP region type, the BMP Region Selection screen displays.
- Press END to return to the Data Base Load - Dataset Specification screen.
- Press RETURN to return to the Primary Option Menu.

DLI Log Usage

If you specified a DLI load job type on the Data Base Load - Dataset Specification screen, the DLI Log Usage screen is displayed.

Figure 6-21. Data Base Load - DLI Log Usage Screen

```
File-AID for IMS  -  Data Base Load - DLI Log Usage  -------------------------
COMMAND ===>


      IMS log dataset usage ===> N          (AK = Allocate; Keep after load
                                             AD = Allocate; Delete on success
                                             N  = Do not use log dataset)
```

IMS Log Dataset Usage

Indicate one of the following:

AK Allocates and keeps the IMS log dataset that is cataloged after the load job ends.

AD Allocates the IMS log dataset, but deletes it after the successful completion of the load job.

N Does not allocate or use a log dataset.

Additional information on the IMS log dataset and its usage can be found in "IEFRDER DD" on page 3-9.

You may be required to use a log dataset (AK or AD in the IMS log dataset usage field) if a log dataset was not pre-allocated to your TSO session and:

- Your installation uses DBRC log control
- Your installation installed a File-AID for IMS security exit that requires you to allocate it
- All the following are true:
  - A processing option of I or U is specified.
  - One of the databases to be loaded contains a secondary index source segment.
  - The secondary index does not have a guaranteed unique key.
  - The installation installed File-AID for IMS to use the dynamic backout parameter to the IMS region controller (DFSRRC00).

    If a log dataset is not allocated, the load process halts. Refer to "Secondary Indexing" on page 4-65 for more information about secondary indexes.

    This need for a log dataset may only be evident after the DLI job attempts the load.

Terminating the Screen

Do one of the following to terminate the DLI Processing Options screen:

- Press Enter. The Data Base Load - Data Base Dataset Specification screen (Figure 6-22) is displayed.
- Enter END to return to the Data Base Load - Dataset Specification screen.
- Enter RETURN to return to the Primary Option Menu.

Data Base Dataset Specification

The LOAD - Data Base Dataset Specification screen is used to specify the dataset names for the database you want to load. This screen is displayed after the Data Base Load - Processing Options screen for DLI load job types only.

Figure 6-22. LOAD - Data Base Dataset Specification Screen

```
------  LOAD --- Data Base Dataset Specification   (DBD-IXPCUST   ) LINE 00001
COMMAND ===>                                                 SCROLL ===> CSR

Obtain DB Dataset Names from ===> P   (P = Previously used with 'P' here,      S
                                       I = IMS dynamic allocation source)      H
                                                                               R
DBRC not active                                                              D
                                                                             I  L
                                                                             S  E
DBD       DDNAME     DATASET NAME                                 PASSWORD   P  V
--------- ---------- -------------------------------------------- --------- --- -
IXPCUST   IXPCUSTD   FISAMP.CUSTOMER                                        SHR N
IXPORDR   IXPORDRD   FISAMP.ORDER                                           SHR N
               ***   END OF DATA BASE DATASET NAMES   ***









Press Enter when data base datasets have been fully designated
Use END command to end Load Data Base Dataset Specification
```

Obtain DB Dataset Names from

If your installation uses dynamic allocation for databases, enter I. The database dataset names are retrieved from the datasets allocated to the DFSRESLB DD. If File-AID for IMS/ISPF cannot retrieve the dataset name, the message "UNABLE TO DETERMINE" is displayed in the Dataset Name field. If you enter P, the dataset name fields are formatted from your user profile dataset.

DBD

Displays the name of the primary DBD entered on the Dataset Specification screen.

DDNAME

Displays the ddname of the first dataset group in the primary DBD.

Dataset Name

Enter the database dataset name to be allocated to the ddname.

There are three conventions for entering a database dataset name. If you enter every node in the dataset name, the name must be enclosed in apostrophes. If the first

node of the dataset matches your TSO-ID, you can omit the first node and the apostrophes.

When a dataset name has a node identical to the ddname of the dataset, you can substitute an asterisk for that node. If a dataset name has more than one node equal to the ddname, you can substitute an asterisk for only one of the nodes.

The third convention for entering a database dataset name applies only when a FROM dataset resides on a tape and you have specified Y in the Use Application Relationship field on the Application Relationship Option screen. Because File-AID for IMS cannot read the FROM dataset online prior to the Load function, all related databases are assumed to be extracted. For those related databases excluded in the extract process, you can assign a dummy status by entering DUMMY in the dataset name. A DUMMY dataset name for the given ddname is set only in the JCL submitted for the Load function. Future references to the dataset name for the ddname display the original dataset name.

Except for DUMMY dataset names, once you enter a database dataset name on the Data Base Dataset Specification screen, that dataset name is retained from session to session (refer to "User Profile Dataset" on page 3-6). If you specify Y in the Use DB Dataset Names from Dynamic Allocation field, the dataset names are retained only if no dataset names exist in the user profile dataset for the associated database ddnames. In subsequent sections, File-AID for IMS/ISPF pre-formats those dataset name fields where it has saved names.

A separate line is displayed for each additional dataset group in the primary DBD. The DBD NAME column is blank, and the ddname column displays the ddname for the dataset group. Each line also has the Data Base Dataset Name and Password fields.

Any external DBDs that are directly referenced by the primaryDBD (such as secondary index DBD, a logically related DBD, or an application related DBD) are shown sequentially under the primary DBD with their ddname, Data Base Dataset Name, and Password fields. There can also be DBDs and ddnames listed that are not directly referenced by the primary DBD. These are from DBDs that are indirectly related to the primary DBD through the primary's external references. You must enter database dataset names for all listed ddnames.

Password

Enter the password if the database dataset is OS password protected. The password for an OS password protected dataset is not saved across sessions.

DISP

This is the disposition, which will be used to allocate the datasets. It is either SHR if the dataset will be allocated shared or OLD if the dataset will be allocated old. For File-AID for IMS functions, which do not update the dataset such as browse and extract, the datasets are allocated SHR. Function which update, such as edit and load, will cause the dataset to be allocated OLD unless the dataset name is the name registered in DBRC. If the dataset is the name registered in DBRC, the dataset is allocated SHR.

SHR LEV

This is N if the dataset is not registered in DBRC. If registered in DBRC it is the DBRC share level of 0 through 3.

Terminating the Screen

Do the following to terminate the Data Base Dataset Specification screen:

- Press Enter to advance to the Data Base Load - JCL Specification screen (Figure 6-26).
- Enter the END command to return to the Data Base Load - Dataset Specification screen.
- Enter the RETURN command to return to the Primary Option Menu.

In all cases, any dataset names that you entered are saved.

Data Base Load Image Copy Specification

The Data Base Load Image Copy Specification screen is displayed, following a load function, if IMS requires that any of the database datasets require an Image Copy before being used. IMS requires that all HALDB datasets be image copied following a load. IMS 7.1 also requires that non HALDB datasets be image copied following a load.

Figure 6-23. Data Base Load Image Copy Specification Screen

```
File-AID for IMS - - Data Base Load - - Image Copy Specification - -
COMMAND ===>

This data base Load JOB is using datasets registered in DBRC.

IMS requires that an Image Copy of xx of these datasets be
preformed before they can be used.

Enter Y below to have this Load JOB include a step to perform the
Image Copy.


            Perform Image Copy   . . Y       (Y= Yes; N= No)


  High Level Image Copy DSN node . . PLGSXK0
```

Perform Image Copy

Performing the Image Copy is optional. Enter Y to perform the Image Copy as part of the load JOB and N if you do not want File-AID for IMS to perform the Image Copy as part of the Load JOB.

High Level Image Copy DSN node

You can specify the High Level node of the Image Copy datasets. The default is your user ID. For very large datasets, you may want to save and edit the JCL, modifying the space allocation for the Image Copy datasets.

If all of the datasets that normally require an Image Copy are registered as not recoverable, then an Image Copy is not required. Therefore, the Data Base Load Image Copy Specification screen is not displayed.

However, File-AID for IMS cannot perform the Image Copy if any of the datasets that require an Image Copy are registered in DBRC using the REUSE option. DBRC GENJCL must be used to perform the Image Copy because DBRC needs to determine which Image Copy dataset to use.

If any of the datasets registered with REUSE is a non HALDB dataset the following screen is displayed.

Figure 6-24. Data Base Load Image Copy Specification (Informational) Screen

```
File-AID for IMS - - Data Base Load - - Image Copy Specification - -
COMMAND ===>

This data base Load JOB is using datasets registered in DBRC.

IMS requires that an Image Copy of 1 of these datasets be
preformed before they can be used.

One or more of these datasets is using the DBRC Image Copy option of
Reusable.  Only DBRC GENJCL can be used to perform the Image Copy when
the DBRC Reusable option is used.

This JOB will not include a step to perform the Image Copy.  It will
be necessary for you to edit the JCL generated by this JOB into two
JOBs.  The first JOB should include the steps up to the delete step.
The delete step needs to be a separate JOB.  The DBRC Image Copy must
be executed after the first JOB and before the second JOB.
```

Note: Refer to "Editing the Generated JCL" on page 6-18 for more information on the Load utility.

If all of the datasets registered with REUSE are HALDB dataset, the following screen is displayed instead.

Figure 6-25. Data Base Load Image Copy Specification (Informational) Screen

```
File-AID for IMS - - Data Base Load - - Image Copy Specification - -
COMMAND ===>

This data base Load JOB is using datasets registered in DBRC.

IMS requires that an Image Copy of xx of these datasets be
preformed before they can be used.

One or more of these datasets is using the DBRC Image Copy option of
Reusable.  Only DBRC GENJCL can be used to perform the Image Copy when
the DBRC Reusable option is used.

This JOB will not include a step to perform the Image Copy.  It will
be necessary for you to perform the Image Copy using DBRC GENJCL before
the database can be used.
```

Data Base Load - JCL Specification

The Data Base Load - JCL Specification screen is used to specify the load job JCL information. This screen is displayed after the Data Base Dataset Specification screen for DLI load job types. For BMP load job types, this screen is displayed after the Processing Options screen.

Figure 6-26. Data Base Load - JCL Specification Screen

```
File-AID for IMS  ---  Data Base Load - JCL Specification ---------------------
COMMAND ===>

Specify batch JCL information:
               Sysout class ===> *

  JOB statement information:
 ===> //XXXXXXX JOB (XXXXXXX),'FILE-AID LOAD',
 ===> //   MSGCLASS=A,NOTIFY=XXXXXXX
 ===> /*ROUTE  PRINT U1326
 ===> /*JOBPARM FORMS=LCAL









Press Enter to submit batch job        Enter JCL command to edit generated JCL
```

Enter the output class for the load reports in the Sysout class field, the JOB statement, and other related JCL statements (for example, /*JOBPARM and /*ROUTE statements).

Terminating the Screen

Do one of the following to terminate the Data Base Load - JCL Specification screen:

- Press Enter to generate the JCL, submit the load job for execution, and return to the Data Base Load - Dataset Specification screen.
- Enter the JCL command to advance to an ISPF/PDF Edit screen, where you can edit the generated JCL before submitting it. Refer to “Editing the Generated JCL” on page 6-18.
- Enter the END command to return to the Data Base Load - Dataset Specification screen **without** submitting the load job.
- Enter the RETURN command to return to the Primary Option Menu **without** submitting the load job.

Editing the Generated JCL

If you entered the JCL command on the Data Base Load - JCL Specification screen, an ISPF/PDF Edit screen similar to the one shown in Figure 6-27 is displayed.

Figure 6-27. ISPF/PDF Edit Screen

```
EDIT ---- CW.SPFTEMP1.CNTL ---------------------------------- COLUMNS 001 072
COMMAND ===>                                                  SCROLL ===>
****** ******************************** TOP OF DATA ***************************
000001 //LOADJOB JOB (XYZ,CWX),'ACCT1',CLASS=E,PRTY=8
000002 /*ROUTE XEQ LOCAL
000003 /*ROUTE OUTPUT LOCAL
000004 //*
=NOTE= YOU ARE NOW EDITING THE JCL THAT FILE-AID HAS GENERATED TO PERFORM
=NOTE= THE REQUIRED FUNCTION.  YOU CAN CHANGE THIS JCL IF DESIRED, AND USE
=NOTE= THE SUBMIT PRIMARY COMMAND TO SUBMIT THE JOB.  TO KEEP THIS JCL FOR
=NOTE= FUTURE USE, USE THE CREATE OR REPLACE PRIMARY COMMAND.  ENTER THE
=NOTE= END COMMAND TO EXIT THE FUNCTION WITHOUT SUBMITTING THE JOB.
000005 //*-----------------------------------------------------------------*
000006 //* SORT LOAD FILE:                                                 *
000007 //*   THIS STEP SORTS THE INPUT FILE FOR THE DATA BASE LOAD         *
000008 //*   STEP.                                                         *
000009 //*-----------------------------------------------------------------*
000010 //SORTSTEP EXEC PGM=SORT
000011 //STEPLIB  DD DSN=SYS1.SORTLIB,
000012 //            DISP=SHR
000013 //SYSOUT   DD SYSOUT=(*)
000014 //SORTIN   DD DSN=CW.FISAMP.EXTRACT,
000015 //            DISP=SHR
000016 //SORTOUT  DD DSN=&&SORTPREF,

 Use END command to terminate Load Data Base Specification
```

At this point in the conversation, the ISPF/PDF editor has been invoked on the temporary dataset that contains the JCL generated to do the load. All ISPF edit commands are available for use. For example, to insert additional JCL statements, use the I (Insert) line command. To change the JCL, simply type over the existing data. To delete a line, use the D (Delete) line command. You can use the CREATE and REPLACE primary commands to save the generated JCL into a partitioned (PDS) or sequential dataset, which allows you to submit the JCL in the future without using the online conversation screens.

Do the following after you view or edit the JCL:

- Enter the SUBMIT command to submit the load job for execution. The "Database Load Reports" described on page 6-69 are generated.
- Enter the END or CANCEL command to return to the Data Base Load - Dataset Specification screen.

Database Load Function (Batch Stream)

The JCL shown on the following pages can be coded and submitted to execute the load process without invoking the online conversation. The JCL for utilities is omitted. The required parameter information and DD statements for File-AID for IMS steps are described following the JCL. To simplify the coding of this JCL, refer to "Editing the Generated JCL" on page 6-18.

Note: JCL for RECON datasets is not shown. If your installation uses DBRC without dynamic allocation of the RECON datasets, RECON DSNs must be specified in File-AID for IMS Option 0.3, IMS Parameters.

Depending on the processing option specified and whether it is a HALDB database and whether logical relationships and/or secondary indexes are present, the batch JOB consists of up to 13 steps. Four of these steps execute File-AID for IMS/ISPF programs and the other nine execute IMS utility programs or sort. The utilities sort the load file and resolve logical relationships and secondary indexes and take dataset image copies.

1. SORTSTEP - Dataset Sort Utility (SORT)
   This step sorts the load FROM file into the proper sequence for loading.

2. PREREORG - IBM Data Base Prereorganization Utility (DFSURPR)
   This step executes the prereorganization utility. It determines what will be required regarding logical relationships and secondary indexes and initializes HALDB datasets as empty.
3. DBLOAD - The Data Base Load (IXPFTDDV)
   This step inserts the segments into the databases.
4. PRFXRESL - IBM Data Base Prefix Resolution Utility (DFSURG10)
   This step processes the prereorganization dataset created in step 2 and the DFSURWF1 dataset which depending on options was created during the DBLOAD step. It is only required if the processing option of L is specified in the DBLOAD step and the load included non HALDB databases with logical relationships and/or secondary indexes.
5. HISMUNLD - IBM HISAM Reorganization Unload Utility (DFSURUL0)
   This step processes secondary index records created in step 4. It is only required if the processing option of L is specified in the DBLOAD step and secondary indexes are present for non HALDB databases.
6. HISMRELD - IBM HISAM Reorganization Reload Utility (DFSURRL0)
   This step processes the secondary index information created in step 5. It is only required if the processing option of L is specified in the DBLOAD step and secondary indexes are present for non HALDB databases.
7. PRFXUPDT - IBM Data Base Prefix Update Utility (DFSURGP0)
   This step updates the prefix of logical child and logical parent segment load in the DBLOAD step. It is only required if the processing option of L is specified in the DBLOAD step and logically related segments are present for non HALDB databases.
8. IMAGECOP - Data Base Image Copy (DFSUDMP0)
   If DBRC requires that some of the data base datasets require an image copy and the option to include the image copy was chosen, this step is included to take all required image copies.
9. DBDELETE - Data Base Delete (IXPINTDV)
   It is possible that in the load step, that the input dataset did not contain any segments for one or more of the related databases. In this case File-AID inserts a 'dummy' segment in order to get the database out of create mode. This step attempts to retrieve the 'dummy' segment and if present, deletes it. It is only required when processing option of L is specified in the DBLOAD step and only for non HALDB databases.

Note: This can only occur in a DL/I region. Also, even when using a static PSB to perform the load step, the delete step is performed using a dynamic PSB.

10. RPTSTATS - Data Base Load Summary Reporting (IXPRPTDV)
    This step produces the Data Base Summary Report.
11. SORTLCST - Dataset Sort Utility (SORT)
    IMS does not support loading of logical children segments in load mode. If any of the databases being loaded are HALDB databases that contain logical children, these load records are not loaded in the load step but are written to the dataset having ddname IXPTO. In this case the LOAD job will contain 3 more steps to load the HALDB logical children in update mode. This is the first of these 3 steps. It sorts the extract records into the order required for loading in update mode. The next step will load the HALDB logical children in update mode and the following step will take an image copy of all datasets involved in this load.
12. LCUPDATE - Load HALDB logical children in update mode.
    This step is only present if the load involved a HALDB database that included logical children. This step loads the HALDB logical children in update mode.
13. IMAGECO2 - Data Base Image Copy (DFSUDMP0)
    This step takes an image copy of datasets involved in the prior update step.

14. RPTSTATS - Data Base Load Summary Reporting (IXPRPTDV)
    This step produces the Data Base Summary Report.

For more information on the IBM utilities described here, refer to IBM's IMS/ESA Administration Guide: DB and the IMS/ESA Utilities Reference Manual.

Figure 6-28. Sort Load File JCL, Part 1

```
//*****************************************************************
//*SORT LOAD FILE:                                                *
//*     THIS STEP SORTS THE INPUT FILE FOR THE DATA BASE          *
//*     LOAD STEP.                                                *
//*****************************************************************
//SORTSTEP EXEC PGM=sort-pgm
.
. JCL not shown for this step
.
//*****************************************************************
//*DATA BASE PRE-REORGANIZATION:                                  *
//*  THIS STEP EXECUTES THE IMS PRE-REORG UTILITY TO SET UP THE   *
//*  PRE-REORG DATASET FOR LOGICAL AND INDEX                      *
//*     DATA BASE DATASETS.                                       *
//*****************************************************************
//PREREORG EXEC PGM=DFSRRC00,
//              COND=(0,LT),
//              PARM='ULU,DFSURPRO'
.
.  JCL not shown for this step
.
//*****************************************************************
//*DATA BASE LOAD:                                                *
//*     THIS STEP INSERTS DATA BASE SEGMENTS FROM THE SORTED      *
//*     INPUT FILE.                                               *
//*****************************************************************
//DBLOAD   EXEC PGM=IXPFTDDV,REGION=4096,
//              COND=(8,LT),
//              PARM=' parameter information '
//STEPLIB  DD   DSN=ims-reslib-dataset-name,
//              DISP=SHR
//         DD   DSN=File-AID-load-lib,
//              DISP=SHR
//DFSRESLB DD   DSN=ims-reslib-dataset-name,
//              DISP=SHR
//IXPD1    DD   DSN=dbdlib-dataset-name1,
//              DISP=SHR
//         DD   DSN=dbdlib-dataset-name2,
//              DISP=SHR
//         DD   DSN=dbdlib-dataset-name3,
//              DISP=SHR
//IMS      DD   DSN=psblib-dataset-name1,
//              DISP=SHR
//         DD   DSN=psblib-dataset-name2,
//              DISP=SHR
//         DD   DSN=psblib-dataset-name3,
//              DISP=SHR
```

Figure 6-29. Sort Load File JCL, Part 2

```
//IEFRDER  DD   DSN=log-dataset-name,
//              UNIT=perm-device,
//              SPACE=(1048,(200,400),RLSE),
//              DCB=(RECFM=VB,LRECL=1044,BLKSIZE=1048),
//              DISP=(NEW,CATLG,CATLG)
//DFSVSAMP DD   DSN=dfsvsamp-pds(member),
//              DISP=SHR
//IXPMLIB  DD   DSN=File-AID-message-lib,
//              DISP=SHR
//SYSOUT   DD   SYSOUT=output-class
//SYSPRINT DD   DUMMY,
//              DCB=(RECFM=FBA,LRECL=121,BLKSIZE=18997)
//IXPSTATS DD   DSN=&&IXPSTATS,
//              UNIT=temp-device,
//              SPACE=(6160,(10,5),RLSE),
//              DCB=(DSORG=PS,RECFM=FB,LRECL=80,BLKSIZE=6160),
//              DISP=(NEW,PASS)
//*-------------------------------------------------------------
//*All database dataset names were not obtained from the IMS
//*dynamic allocation source, therefore the DD statements
//*for the databases are included in this JCL.
//*-------------------------------------------------------------
//IXPIMBED DD DUMMY
//**IXPIMSDY DD DUMMY
//*-------------------------------------------------------------
//dbdd1    DD   DSN=database-dataset-1,
//              DISP=SHR
//dbdd2    DD   DSN=database-dataset-2,
//              DISP=SHR
//dbdd3    DD   DSN=database-dataset-3,
//              DISP=SHR
//DFSURWF1 DD   DSN=&&DFSURWF1,
//              UNIT=SYSDA,
//              SPACE=(19069,(2,20),RLSE),
//              DCB=(RECFM-VB,LRECL=900,BLKSIZE=19069),
//              DISP=(NEW,PASS)
//IXPED    DD   DSN=&&SORTPREF,
//              DISP=(OLD,PASS)
//IXPEXT   DD   DSN=*.SORTSTEP.SORTIN,
//              DISP=SHR
//DFSURCDS DD   DSN=&&DFSURCDS,
//              DISP=(OLD,PASS)
//IXPTO    DD DSN=&&IXPLCHLD,
//            UNIT=SYSDA,
//            SPACE=(32760,(00002,20),RLSE),
//            DCB=(RECFM=VB,LRECL=xxx,BLKSIZE=xxxxx),
//            DISP=(NEW,PASS)
//SYSIN    DD   *,DCB=BLKSIZE=80
DLI parameters for DFSRRC00
```

Figure 6-30. Sort Load File JCL, Part 3

```
//*****************************************************************
//*PREFIX RESOLUTION:                                             *
//*     THIS STEP EXECUTES THE IMS PREFIX RESOLUTION UTILITY.     *
//*****************************************************************
//PRFXRESL EXEC PGM=DFSURG10,
//              COND=(8,LT)
.
. JCL not shown for this step
.
//*****************************************************************
//*HISAM UNLOAD:                                                  *
//*     THIS STEP EXECUTES THE IMS HISAM UNLOAD UTILITY.          *
//*****************************************************************
//HISMUNLD EXEC PGM=DFSRRC00,
//              COND=(8,LT),
//              PARM='ULU,DFSURUL0'
.
. JCL not shown for this step
.
//*****************************************************************
//*HISAM LOAD:                                                    *
//*     THIS STEP EXECUTES THE IMS HISAM LOAD UTILITY.            *
//*****************************************************************
//HISMRELD EXEC PGM=DFSRRC00,
//              COND=(8,LT),
//              PARM='ULU,DFSURRL0'
.
. JCL not shown for this step
.
//*****************************************************************
//*PREFIX UPDATE:                                                 *
//*     THIS STEP EXECUTES THE IMS PREFIX UPDATE UTILITY.         *
//*****************************************************************
//PRFXUPDT EXEC PGM=DFSRRC00,
//              COND=(8,LT),
//              PARM='ULU,DFSURGP0'
.
. JCL not shown for this step
//*******************************************************************
//* IMAGE COPY:                                                     *
//*   THIS STEP EXECUTES THE IMS IMAGE COPY UTILITY.                *
//*******************************************************************
//IMAGECOP EXEC PGM=DFSUDMP0,
// COND=(8,LT),
// PARM='DBRC=Y'
.
. JCL not shown for this step
.
.
//*****************************************************************
//*DATA BASE DELETE:                                              *
//*     THIS STEP DELETES ANY DUMMY DATA BASE SEGMENTS            *
//*     INSERTED INTO THE DATA BASE(S) DURING THE LOAD STEP.      *
//*****************************************************************
//DBDELETE EXEC PGM=IXPINTDV,
//              COND=(8,LT),
//              PARM=' parameter information '
//STEPLIB  DD   DSN=ims-reslib-dataset-name,
//              DISP=SHR
//         DD   DSN=File-AID-load-lib,
//              DISP=SHR
//DFSRESLB DD   DSN=ims-reslib-dataset-name,
//              DISP=SHR
//IXPD1    DD   DSN=dbdlib-dataset-name1,
//              DISP=SHR
//         DD   DSN=dbdlib-dataset-name2,
//              DISP=SHR
//         DD   DSN=dbdlib-dataset-name3,
//              DISP=SHR
//IEFRDER  DD   DSN=log-dataset-name,
//              UNIT=perm-device,
//              SPACE=(1048,(200,400),RLSE),
//              DCB=(RECFM=VB,LRECL=1044,BLKSIZE=1048),
//              DISP=(MOD,KEEP,KEEP)
```

Figure 6-31. Sort Load File JCL, Part 4

```
//DFSVSAMP DD   DSN=dfsvsamp-pds(member),
//              DISP=SHR
//IXPMLIB  DD   DSN=File-AID-message-lib,
//              DISP=SHR
//SYSOUT   DD   SYSOUT=output-class
//*-------------------------------------------------------------
//*All database dataset names were not obtained from the IMS
//*dynamic allocation source, therefore the DD statements
//*for the databases are included in this JCL.
//*-------------------------------------------------------------
//IXPIMBED DD DUMMY
//**IXPIMSDY DD DUMMY
//*-------------------------------------------------------------
//dbdd1    DD   DSN=database-dataset-1,
//              DISP=SHR
//dbdd2    DD   DSN=database-dataset-2,
//              DISP=SHR
//dbdd3    DD   DSN=database-dataset-3,
//              DISP=SHR
//SYSIN    DD   *,DCB=BLKSIZE=80
DLI parameters for DFSRRC00
//*-----------------------------------------------------------------*
//* DATABASE BEING LOADED CONTAINS HALDB LOGICAL CHILDREN, ADD     *
//* STEP TO SORT THEM AND THEN LOAD THEM IN UPDATE MODE.           *
//*-----------------------------------------------------------------*
//*-----------------------------------------------------------------*
//*   THIS STEP SORTS THE HALDB LOGICAL CHILDREN AND THEIR CHILDREN*
//*   AS REQUIRED TO LOAD IN UPDATE MODE                           *
//*-----------------------------------------------------------------*
//SORTLCST EXEC PGM=SORT
//STEPLIB  DD DSN=SYS1.SORTLIB,DISP=SHR
//SYSOUT   DD SYSOUT=(X)
//SORTIN   DD DSN=&&IXPLCHLD,
//            DISP=SHR
//SORTOUT  DD DSN=&&SORTHALD,
//            UNIT=SYSDA,
//            SPACE=(32760,(00002,20),RLSE),
//            DCB=(RECFM=VB,LRECL=77,BLKSIZE=32760),
//            DISP=(NEW,PASS)
//SORTWK01 DD UNIT=SYSDA,
//            SPACE=(32760,(00002),,,ROUND),
//            DISP=(NEW,DELETE,DELETE)
//SORTWK02 DD UNIT=SYSDA,
//            SPACE=(32760,(00002),,,ROUND),
//            DISP=(NEW,DELETE,DELETE)
//SORTWK03 DD UNIT=SYSDA,
//            SPACE=(32760,(00002),,,ROUND),
//            DISP=(NEW,DELETE,DELETE)
//SYSIN    DD *
 RECORD TYPE=V
 SORT FIELDS=(05,8,BI,A)
/

//*-----------------------------------------------------------------*
//* DATA BASE LOAD:                                                 *
//*   THIS STEP INSERTS THE HALDB LOGICAL CHILDREN AND THEIR        *
//*   CHILDREN IN UPDATE MODE                                       *
//*-----------------------------------------------------------------*
//LCUPDATE EXEC PGM=IXPFTDDV,REGION=4096K,
//         COND=(8,LT),
//         PARM=('/NDBY     FTDDLI  I00050            992E',
//         '3278    07100             DY')
//STEPLIB  DD DSN=IMS-reslib-dataset-name,
//            DISP=SHR
//         DD DSN=File-AID-load-lib,
//            DISP=SHR
//         DD DSN=CEE.SCEERUN,DISP=SHR
//DFSRESLB DD DSN=IMS710A.SDFSRESL,
//            DISP=SHR
//IXPD1    DD DSN=dbdlib-dataset-name,
//            DISP=SHR
//IEFRDER  DD DSN=log-dataset-name,
//            UNIT=DISK,
//            SPACE=(1048,(200,400),RLSE),
//            DCB=(RECFM=VB,LRECL=1044,BLKSIZE=1048),
//            DISP=(NEW,CATLG,CATLG)
//DFSVSAMP DD DSN=dfsvamp-pds(member),
//            DISP=SHR
//IXPMLIB  DD DSN=File-AID-message-lib,DISP=SHR
```

Figure 6-32. Sort Load File JCL, Part 5

```
//SYSOUT   DD SYSOUT=(X)
//SYSUDUMP DD SYSOUT=(X)
//IXPSTATS DD DSN=&&IXPSTATS,
//            UNIT=SYSDA,
//            DISP=(MOD,PASS)
//*-----------------------------------------------------------------
//* All database dataset names were obtained from the IMS dynamic
//* allocation source; these dataset names are included here as
//* comments only.  When this JOB is executed, the current dataset
//* names will be obtained and the dataset will be dynamically
//* allocated.
//*-----------------------------------------------------------------
//IXPIMSDY DD DUMMY
//**IXPIMBED DD DUMMY
//*-----------------------------------------------------------------
//**dd1    DD DSN=database-dataset-name,
//**           DISP=OLD
//IXPED    DD DSN=&&SORTHALD,
//            DISP=(OLD,PASS)
//IXPEXT   DD DSN=*.SORTLCST.SORTIN,
//            DISP=SHR
//SYSIN    DD *,DCB=BLKSIZE=80
,0000,,,,,,,,Y,Y,,Y,,
//*-----------------------------------------------------------------*
//* IMAGE COPY:                                                     *
//*   THIS STEP EXECUTES THE IMS IMAGE COPY UTILITY.                *
//*-----------------------------------------------------------------*
//IMAGECO2 EXEC PGM=DFSUDMP0,
// COND=(8,LT),
// PARM='DBRC=Y'
.
. JCL not shown for this step
.
//*****************************************************************
//*DATA BASE LOAD SUMMARY REPORTING:                              *
//*     THIS STEP PRODUCES THE DATA BASE LOAD SUMMARY REPORT.     *
//*****************************************************************
//RPTSTATS EXEC PGM=IXPRPTDV,
//              COND=(EVEN),
//              PARM=’parameter information ’
//STEPLIB  DD   DSN=File-AID-load-lib,
//              DISP=SHR
//IXPSTATS DD   DSN=&&IXPSTATS,
//              DISP=(OLD,DELETE,DELETE)
//IXPMLIB  DD   DSN=File-AID-message-lib,
//              DISP=SHR
//SYSOUT   DD   SYSOUT=output-class
```

Note: If the database dataset names were obtained from the IMS dynamic allocation source, the highlighted text from Figure 6-29 on page 6-47 and Figure 6-31 on page 6-49 would be replaced with the following:

```
//*-----------------------------------------------------------------
//* All database dataset names were obtained from the IMS dynamic
//* allocation source; these dataset names are included here as
//* comments only. When this JOB is executed, the current dataset
//* names will be obtained and the dataset will be dynamically
//* allocated.
//*-----------------------------------------------------------------
//IXPIMSDY  DD DUMMY
//**IXPIMBED DD DUMMY
//*-----------------------------------------------------------------
```

The parameter information in the PARM field on the EXEC statement for the DBLOAD step must have the following format:

Table 6-7. EXEC Statement PARM Field - DBLOAD Step

Description	Value	Start Posn	End Posn
Constant	/N	1	2
Primary DBD name	name of primary DBD	3	10
Constant	FTD	11	13
Load Job Type	DLI or BMP	14	18
Processing Mode	I, U, or L	19	19
Checkpoint Frequency	1 to 32,767	20	24
Application Group Name	enter if required (BMP only)	25	32
CICS/IMS System	enter if BMP job type	33	36
Maximum Print Lines Per Page	20 to 99	37	38
Spacing Before Detailed Headers	1 to 5, or T	39	39
Data Format	E, D, or M	40	40
Terminal Type		41	48
IMS Version/Release	version/release number	49	53
PSB/ACB Name	Enter for static PSB only	54	61
PCB Number	PCB number within PSB (static PSB only)	62	66
PSB Type	S for Static PSB D for Dynamic PSB	67	67
HALDB logical child indicator	Y or N	68	68

The Maximum Print Lines Per Page and Spacing Before Detailed Headers parameters are common report parameters that are explained more fully in “Specify print parameters” on page 2-5.

The Terminal Type is used to determine the correct character set for the terminal and should be the same as defined in Option 0.1 of ISPF (ISPF Terminal Characteristics).

Data format values of D and M are valid only for Double-Byte Character Set (DBCS) support.

In the example below, a BMP load job is run using a DBD of PORDR, a Processing Option of I, checkpoints taken after every 100 DL/I calls, an Application Group Name of TESTIMS to select the BMP environment, and an IMS System mnemonic of TEST. The maximum number of print lines on any page is 60, with two blank lines before each repetitive set of detailed heading lines. Data Format is EBCDIC and Terminal Type is 3278.

```
// PARM='/NPORDR   FTDBMP  I00100TESTIMS TEST602E3278    03100'
```

Note: The load job is not restartable. When using a Processing Option of I or U, IMS basic checkpoints are taken at an interval specified by the installer of File-AID for IMS/ISPF.

The basic checkpoints value can be overridden at execution time by changing the Checkpoint Frequency value in the DBLOAD PARM field before submitting the job or by using File-AID for IMS Option 0.3, IMS Parameters.

IThe following DD statements are required for the DBLOAD step:

Table 6-8. DBLOAD DD Statements

DD Statement	Description
PROCLIB DFHESL	When you specify the SSM IMS parameter on either a DL/I or BMP parameter string, the system attempts to allocate appropriate datasets to the PROCLIB and DFHESL ddnames for use during edit and browse sessions. In addition, JCL that executes DL/I or BMP jobs contains the appropriate concatenations of these ddnames.
IXPIMBED	Allocate this DD to DUMMY to indicate to File-AID for IMS that all database dataset names are imbedded in the JCL.
IXPIMSDY	Allocate this DD to DUMMY to indicate to File-AID for IMS that all database dataset names are to be obtained from the IMS dynamic allocation source.
STEPLIB	Designates the IMS system datasets that contain the IMS nucleus, required action modules, and the library where the File-AID for IMS/ISPF load modules are stored.
DFSRESLB	Designates the IMS system datasets that contain the IMS nucleus and required action modules.
IXPD1	Designates the DBD load library datasets that contain the DBD members that describe the databases.
IMS	Designates the first PSB load library datasets that contain the PSB member that describes the databases.
IEFRDER	Designates the IMS log dataset. This DD is not required for BMP load job types.
DFSVSAMP	The dataset that contains the control statements that describe the buffer pools used by IMS. This DD is not required for BMP load job types.
IXPMLIB	The library that contains File-AID for IMS/ISPF messages.
SYSOUT	The output class for the load exception report.
SYSPRINT	Must be DUMMY, with the DCB coded as shown.
IXPSTATS	The temporary dataset used as input to the RPTSTATS step to create the load summary report.
DB datasets	These DDs are not required for BMP extract job types. For DLI job types, the DD statements are either included as actual DD statements or they are included as comments. If all the database dataset names were obtained from the IMS dynamic allocation source, then a DD DUMMY statement with DD name IXPIMSDY is included to indicate this. The DD statements for the database datasets are included as comments only. When the JCL is submitted, the current datasets will be dynamically allocated by File-AID for IMS using the IMS dynamic allocation source to obtain the names. If all the dataset names were not obtained from the IMS dynamic allocation source, then the IXPIMSDY DD statement is included as a comment only and the database dataset DD statements are included as true DD statements.
DFSURWF1	The work dataset passed to the Prefix Resolution utility (if executed).
IXPED	The sorted FROM file passed from the SORTSTEP step.
IXPEXT	File-AID for IMS/ISPF required dataset if SORTSTEP step was executed. Omit this DD if the SORTSTEP step was not executed.
DFSURCDS	The control dataset created by the Prereorganization utility (if executed).
IXPTO	This DD is only present if one of the databases being loaded is a HALDB database containing a logical child segment type. The extract records for these logical child segments are written to this DD and then loaded in a subsequent update step.
SYSIN	The DL/I parameters passed to DFSRRC00 as specified in Option 0.3, IMS Parameters.

The parameter information in the PARM field on the EXEC statement for the DBDELETE step must have the following format:

Table 6-9. EXEC Statement PARM Field - DBDELETE Step

Description	Value	Start Posn	End Posn
Constant	/N	1	2
Primary DBD name	name of primary DBD	3	10
Constant	DELN	11	14
IMS Version/Release	version/release number	15	19

In the example below a DBD of PORDR is being loaded.

```
// PARM='/NPORDR   DELN03100'
```

The following DD statements are required for the DBDELETE step:

Table 6-10. DBDELETE DD Statements

DD Statement	Description
PROCLIB DFHESL	When you specify the SSM IMS parameter on either a DL/I or BMP parameter string, the system attempts to allocate appropriate datasets to the PROCLIB and DFHESL ddnames for use during edit and browse sessions. In addition, JCL that executes DL/I or BMP jobs contains the appropriate concatenations of these ddnames.
IXPIMBED	Allocate this DD to DUMMY to indicate to File-AID for IMS that all database dataset names are imbedded in the JCL.
IXPIMSDY	Allocate this DD to DUMMY to indicate to File-AID for IMS that all database dataset names are to be obtained from the IMS dynamic allocation source.
STEPLIB	Designates the IMS system datasets that contain the IMS nucleus, required action modules, and the library where the File-AID for IMS/ISPF load modules are stored.
DFSRESLB	Designates the IMS system datasets that contain the IMS nucleus and required action modules.
IXPD1	Designates the DBD load library datasets that contain the DBD members that describe the databases.
IEFRDER	Designates the IMS log dataset.
DFSVSAMP	The dataset that contains the control statements that describe the buffer pools used by IMS.
IXPMLIB	The library that contains File-AID for IMS/ISPF messages.
SYSOUT	The output class for the exception report.
DB datasets	The datasets for the databases. These DDs are not required for BMP load job types.
SYSIN	The DL/I parameters passed to DFSRRC00 as specified in Option 0.3, IMS Parameters.

The parameter information in the PARM field on the EXEC statement for the RPTSTATS step must have the following format:

Table 6-11. EXEC Statement PARM Field - RPTSTATS Step

Description	Value	Start Posn	End Posn
Constant	/N	1	2
Maximum Print Lines Per Page	20 to 99	3	4
Spacing Before Detailed Headers	1 to 5, or T	5	5

The Maximum Print Lines Per Page and Spacing Before Detailed Headers parameters are common report parameters that are explained more fully in "Specify print parameters" on page 2-5. The following DD statements are required for the RPTSTATS step:

Table 6-12. RPTSTATS DD Statements

DD Statement	Description
STEPLIB	The dataset where the File-AID for IMS/ISPF load modules reside.
IXPSTATS	The temporary dataset passed from the DBLOAD step that contains statistics used for reporting purposes.
IXPMLIB	The library that contains File-AID for IMS/ISPF messages.
SYSOUT	The output class for the load summary report.

A load execution return code (RC) appears in the load output listing. For return codes 4, 8, and 16, an error code and message that indicates the specific problem also appears in the listing. In general, the return codes can be summarized as follows:

RC	Explanation	Description
0	job ran to completion	none
4	job ran to completion with warning messages issued	segments were truncated or padded
8	job ran to completion with incomplete results	DBD or segment name not found in DBD
16	job aborted; severe error	input or system error

Advanced Topics

The following topics are for advanced users of the File-AID for IMS/ISPF Extract and Load functions:

- "Extract Processing Flow" on page 6-54
- "Extract TO/Load FROM File" on page 6-55
- "Extracting Roots With Nonunique Keys" on page 6-58
- "Load Processing Flow" on page 6-58
- "Sorting the Load From File" on page 6-59
- "Loading Logically Related Paired Segments" on page 6-59
- "Loading Segments With Nonunique Keys" on page 6-60
- "Reorganizing Databases by Editing the Extract File" on page 6-60
- "Extracting SDEP Segment Types From a DEDB Data Base" on page 6-64
- "Converting a DEDB to an HDAM Data Base" on page 6-64
- "Extracting and Loading a VSAM KSDS File" on page 6-64

Extract Processing Flow

The basic processing flow during the extract process consists of the following five steps:

1. Get a primary database root segment.

   If direct access is possible or if extract is based on key values, a fully qualified GU (Get Unique) DL/I call retrieves the primary database root segment. If the root segments are read sequentially, the first root segment in the primary database is retrieved. For more details, refer to "Direct Access Processing" on page 8-26.

2. Apply selection criteria.

   If selection criteria are applied during the extract process (either temporary or existing criteria as specified on the Option Specification screen), the root segment just retrieved is examined. If the segment passes all criteria specified, the remaining segments in the database record are retrieved and examined. If all segments in the database record pass all criteria specified, processing continues with Step 3. If the segment does not pass the criteria, processing skips to Step 5.

   If no selection criteria are applied, processing continues with Step 3.

3. Extract the database record.

   The root segment is extracted. All segments subordinate to the root are also extracted unless selection criteria indicates that they should not be extracted (indicated by N in the Extract Segment field). Selection criteria are described in Chapter 8, "Selection Criteria".

4. Extract related database records.

Extract database records that have a logical relationship and/or application relationship to the primary database record extracted in Step 3. The process of extracting related database records is called chasing relationships. For every logical child and/or selected source segment in an application relationship, File-AID for IMS/ISPF goes to the root of the destination parent and/or the target root and selects the root and all subordinate segments. If this related database record also has a logical and/or application relationship, then the process of chasing relationships repeats itself until all relationships are resolved.

If selection criteria are applied, this step is bypassed or limited. This action is taken when N is specified in the Select Related Data Base Records field or a value greater than zero is specified in the Default Max Relationship Occurrences to Chase or the Occurrences to Chase field in sub-option 3, Specify Data Base Relationship Criteria, of Option 6. Selection criteria are described in Chapter 8, “Selection Criteria”.

5. Get the next primary database root segment.

   If root segments are accessed directly, the next root segment through selection criteria is retrieved. If root segments are based on key values, the next root segment specified in the keys dataset is retrieved. Processing continues with Step 2 unless the end of the database is encountered or the maximum number of database segments as specified by select criteria is exceeded, in which case the extract is complete.

At the end of the extract cycle, all segments extracted are written to the extract TO file.

Extract TO/Load FROM File

The output file from the extract process is called the Extract TO/Load FROM File. This file is written in a format used by File-AID for IMS/ISPF during the Load function. The file consists of an optional header record that is always created when File-AID for IMS/ISPF produces the extract file, a DBD record if application relationships were applied, and one or more data records.

Header Record

The first record in the extract file when generated by File-AID for IMS is a header record. The header record contains information that is used during the load process. The format of the header record is the following:

```
01  HEADER-RECORD.
    03  FILLER                          PIC X(4)  VALUE LOW-VALUES.
    03  FILLER                          PIC X(3)  VALUE 'IXP'.
    03  File-AID for IMS-VERSION        PIC X(8)  VALUE '06.01.00'.
    03  PROCESSING-OPTION-L-ALLOWED     PIC X(1).
    03  HEADER-RECORD-DATA              PIC X.
```

PROCESSING-OPTION-L-ALLOWED

Indicates whether this extract file can be used to load a database using Processing Option L.

If selection criteria are applied, when the Select Related Data Base Records field is N or the Default Max Relationship Occurrences to Chase or the Occurrences to Chase field contains a value greater than zero, this indicator is set to N. This action prevents the creation of a database that is unusable. Selection criteria are described in Chapter 8, “Selection Criteria”. If no header record is present in the extract file, this indicator is assumed to be Y during the Load function.

HEADER-RECORD-DATA

The length and format of the HEADER-RECORD-DATA field is determined by the LRECL of the extract file.

If the LRECL is less than 58, the format is the following:

```
03  HEADER-RECORD-DATA.
    05  FILLER                          PIC X(3)  VALUE 'PL='.
    05  EXTRACT-FILE-PREFIX-LENGTH      PIC ZZZ9.
    05  FILLER                          PIC X(1)  VALUE SPACE.
    05  FILLER                          PIC X(5)  VALUE 'MRKL='.
    05  EXTRACT-FILE-MAX-ROOT-KEY-LGTH PIC ZZ9.
```

If the LRECL is greater than or equal to 58, the format is the following:

```
03  HEADER-RECORD-DATA.
    05  FILLER                          PIC X(14).
        VALUE 'PREFIX LENGTH='.
    05  EXTRACT-FILE-PREFIX-LENGTH      PIC ZZZ9.
    05  FILLER                          PIC X(1)  VALUE SPACE.
    05  FILLER                          PIC X(20)
        VALUE  'MAX  ROOT  KEY  LENGTH='.
    05  EXTRACT-FILE-MAX-ROOT-KEY-LGTH PIC ZZ9.
```

EXTRACT-FILE-PREFIX-LENGTH

Indicates the total length of the data record prefix.

EXTRACT-FILE-MAX-ROOT-KEY-LGTH

Indicates the length of the longest root key for all databases that participate in the extract process, including logically and/or application related databases.

If no header record is present in the extract file, these header field values are calculated from the DBDs that describes the databases to be loaded.

DBD Record

The DBD record is an optional record that exists only if application relationships are used in the extract process. The format is the following:

```
01  DBD-RECORD-DATA.
    05  FILLER                      PIC X(4)  VALUE LOW-VALUES.
    05  FILLER                      PIC X(3)  VALUE 'DBD'.
    05  APPL-REL-DBDS               PIC  X    (see below)
```

APPL-REL-DBDS

This field contains a list of DBD names of databases that have an application relationship with the primary database or databases related to the primary database. At least one space separates the DBD names in the APPL-REL-DBDS field.

Data Record

Each data record contains one extracted segment's data plus prefix information required by the File-AID for IMS Load function. The format is the following:

```
01  EXTRACT-FILE.
    03  PREFIX.
        05  LAYER-NUMBER                PIC S9 (4)  COMP.
        05  DATA-BASE-NUMBER            PIC S9 (4)  COMP.
        05  SEQUENCE-NUMBER             PIC S9 (9)  COMP.
        05  DATA-BASE-DBD-NAME          PIC X  (8).
        05  SEGMENT-TYPE-NUMBER         PIC S9 (4)  COMP.
        05  SEGMENT-NAME                PIC X  (8).
        05  POSITIONING-COUNT           PIC S9 (4)  COMP.
        05  DATA-BASE-RECORD-ROOT-KEY   PIC X  (see below)
        05  CONCATENATED-KEY-REMAINDER  PIC X  (see below)
    03  SEGMENT-DATA                    PIC X  (see below)
```

LAYER-NUMBER

Controls the order of segment insertion during the load process. All segments with a layer number of 1 are inserted first, segments with a layer number of 2 are inserted second, and so on. The purpose of this layering technique is to ensure that destination parents are inserted before the logical children related to them. This field is used only when load processing option I or U is used.

DATA-BASE-NUMBER

A number assigned to each database that participates in a logical relationship and/or application relationship during the extract process. The number starts at one for the primary database and is incremented and assigned to each subsequent database or index encountered while examining the DBDs.

SEQUENCE-NUMBER

A sequential number, starting at one, assigned to each segment occurrence as it is extracted.

DATA-BASE-DBD-NAME

The name of the DBD where this segment belongs. The DBD name is used during the load process.

SEGMENT-TYPE-NUMBER

A number assigned to each segment type within a database during extract processing. The number starts at one for the root segment and is incremented and assigned to each subsequent segment type encountered while examining the DBD.

SEGMENT-NAME

The name of the segment. This is the segment name used during the load process.

POSITIONING-COUNT

The value used during the load process to determine where to position within the database before inserting the segment.

0 The segment has a unique concatenated key.

-1 The segment has a nonunique concatenated key or is below a segment within the hierarchy that has a nonunique concatenated key and the segment has the same layer number as its parent segment.

n The segment has a nonunique concatenated key and is below a logical child segment in the hierarchy. This is the number of DL/I calls required to position within the database record before inserting this segment. The number represents 1 GetUnique (GU) call and n-1 Get Next (GN) calls.

DATA-BASE-RECORD-ROOT-KEY

The root segment's key for the database record that contains this segment. The length of this field must be the length of the longest root key of all the databases participating in the extract process (including logically and/or application related databases). The EXTRACT-FILE-MAX-ROOT-KEY-LGTH field on the header record contains the length for this field.

CONCATENATED-KEY-REMAINDER

This is the concatenated key for the segment minus the database record's root key, which is in the DATA-BASE-RECORD-ROOT-KEY field. For a root segment, this field is blank. The length of this field must be equal to the length of the longest concatenated key of all the databases that participate in the extract process (including logically and/or application related databases), minus the length of the root key for the database with the longest concatenated key.

During the load process, the length of this field is determined by taking the value contained in the EXTRACT-FILE-PREFIX-LENGTH field and subtracting both the value in the EXTRACT-FILE-MAX-ROOT-KEY-LGTH field and the length of the fixed portion of the prefix layout (28).

SEGMENT-DATA

Indicates the contents of the segment. If the segment length is variable, this field includes the two-byte length field at the beginning of the data.

Extracting Roots With Nonunique Keys

File-AID for IMS/ISPF uses physical DBDs to access the databases during the extract process. Therefore, when retrieving segments to resolve logical relationships, database records for destination parents are retrieved by the database record's root key and not by the logical path from the logical child to the destination parent.

File-AID for IMS cannot determine which of the roots with the same key to extract in the following situations:

1. When the related databases contain roots with nonunique keys, File-AID for IMS extracts all database records with the same root key. This action ensures that the correct database records are extracted and logical relationships are resolved.
2. When the primary database contains logical parent segment types, selection criteria are applied and one nonunique root or a child of a nonunique root is selected, File-AID for IMS automatically selects all roots (database records) with the same key. This action ensures that the correct database record is extracted to resolve logical relationships in the primary database.

Load Processing Flow

The basic processing flow during the load process consists of the following nine steps:

1. Sort the load FROM file.

   This step sorts the load FROM file into the proper order for loading. (Refer to "Sorting the Load From File" on page 6-59.)

2. Read and validate the FROM file header record, if present.

   If the header record is not valid, the information is calculated from the DBDs that describe the databases to be loaded.

3. Read a FROM file data record.

   The Data-Base-Number, Data-Base-DBD-Name, Segment-Type-Number, and Segment-Name are validated against the DBD to be used. If the record is not valid, it is not loaded and a message is written to the File to Data Base Load Exception Report. In this case, the step is repeated.

4. Establish database position.

   For processing options I and U, if the segment to be inserted does not have a unique key, the correct position in the database is established.

5. Insert/Replace the new segment.

   The new segment is inserted. If the segment already exists and the processing option is U, the segment is replaced on the database with the new segment. Otherwise, a message that indicates that File-AID for IMS/ISPF was unable to insert the segment is written to the exception report.

6. Read the next FROM file record.

   The next record is read from the sorted FROM file. The record is validated as described in Step 3. Processing continues with Step 4 unless the end of the file is reached, in which case processing continues with Step 7.

7. Initialize databases.

   If Processing Option L is used, any related databases that remain uninitialized because no segments were inserted into them are initialized with a dummy segment.

8. Resolve segment prefixes.

   If Processing Option L is used, IMS utilities are run to update the segment prefixes in the databases.

9. Delete dummy segments.

   Any dummy segments that were inserted in Step 7 are deleted, leaving all databases in an initialized state.

Sorting the Load From File

The first step in the load job stream uses the sort utility to sort the segments into the correct order for loading. When generating the JCL for the load job, the required SORT control cards are created. If you create your own load file and/or JCL, you must determine the correct fields to sort on. There are two different sort sequences used depending on the processing option specified.

For Processing Option L the sort sequence is as follows:

Sort Sequence	Posn	Lgth	Type
DATA-BASE-NUMBER	3	2	Binary
DATA-BASE-RECORD-ROOT-KEY	29	see note	CHAR
SEQUENCE-NUMBER	5	4	Binary

Note: The DATA-BASE-RECORD-ROOT-KEY is a variable length field (although its length is a constant within a particular load file). Care must be taken to ensure the value in the sort control card is consistent with the file being sorted. The other fields start in fixed positions and are fixed length.

For Processing Options I and U the sort sequence is as follows:

Sort Sequence	Posn	Lgth	Type
LAYER-NUMBER	1	2	Binary
DATA-BASE-NUMBER	3	2	Binary
SEQUENCE-NUMBER	5	4	Binary

All these sort fields start in fixed positions and are fixed length.

Note: The load FROM file is a variable length file, which can affect the sort control cards you create.

Loading Logically Related Paired Segments

When segments participating in bidirectional logical relationships are extracted, two extract records are created, one for each of the paired segments. In most cases only one of the paired segment types is selected for loading, letting IMS resolve the other half of the relationship.

For Processing Option L, IMS rules govern the selection of segment types for loading. The real logical child segment type is loaded for virtually paired relationships, and both segment types are loaded when the relationship is physically paired.

For Processing Options I and U, File-AID for IMS/ISPF determines which logical child segment type to load. For a virtual bidirectional relationship, the real logical child is generally the one that is loaded. For a physical bidirectional relationship, the first of the paired segment types encountered is generally the one loaded. Some overriding factors to this scheme are when one of the paired segments has subordinate segment types and whether the Destination Parent Concatenated Keys (DPCK) are unique.

Note: Because File-AID for IMS/ISPF generally inserts only one segment of a bidirectional logical relationship and IMS resolves the other segment type, bidirectional relationships that have one of the logical children logically deleted in the FROM database can be reestablished when the TO database is loaded, depending on which segment type was selected for loading.

Loading Segments With Nonunique Keys

When loading with Processing Option L, if destination parents with nonunique concatenated keys exist in a database, the IMS utilities used during the load process attach all logical children with the same concatenated key to the first destination parent in the database with that concatenated key.

When updating the database with Processing Options I and U, if the destination parent of the paired segment type selected for insertion has a nonunique concatenated key, these logical children are attached to the first destination parent in the database with the same concatenated key.

Reorganizing Databases by Editing the Extract File

By changing the contents of the extract file and using the modified file in the Load function, database contents and structures can be changed. Some of the changes that can be accomplished using this method are changes to segment data, segment length, segment key, adding or deleting segment occurrences, segment key length, segment format, adding or deleting segment types, and minor database restructuring. Some of these changes also require a DBD change for the new database prior to using the Load function.

When the reorganization affects the entire contents of related databases, separate extracts and loads must be done for each of the related databases. This action ensures that entire related databases are reorganized and not just those database records that participate in logical or application relationships.

Warning

Editing the extract file using the ISPF/PDF editor can cause record truncation, ultimately leading to segment padding during the load process. This result occurs because the ISPF/PDF editor strips off trailing blanks on variable length records when saving the file. However, Compuware's File-AID file management product enables you to edit the extract file without stripping off trailing blanks. If segment padding occurs during the load process, File-AID for IMS produces an informational message to this affect in the File to Data Base Load Summary Report.

Changing Segment Data

Segment data can be changed by editing the SEGMENT-DATA field of the extract file record. If the key value changes, it must also be updated in either the DATA-BASE-RECORD-ROOT-KEY PREFIX field if it is a root segment or the CONCATENATED-KEY-REMAINDER PREFIX field if it is not a root segment.

To easily reformat segment data when the segment layout changes (for example, when fields are added, deleted, or the length or data type of a field changes), Compuware's File-AID/MVS file management product can be used. Following are the steps to reformat a segment type with File-AID/MVS (Release 8.0 and later):

1. Browse the extract file with File-AID/MVS Option 1. Notice the Prefix Length specified on the header record.
2. Create a record/layout XREF for the extract file with File-AID/MVS release 8 (or higher) using Option 7:
   a. Enter the member name of the new XREF and the name of the file containing the record layouts.
   b. Press <Enter>.
   c. Enter a Generated Filler Length equal to the Prefix Length from Step 1.
   d. Enter the record layout name for each segment to be reformatted.
   e. Enter a description of each layout (optional).
   f. Select **Unformatted** (one for each record layout).
   g. Enter *18 for the position.
   h. Enter 8 for the length.
   i. Enter the name of the IMS segment.
   j. Repeat for additional segments.
3. Create another record/layout XREF for the new extract file layout (that is, with the reformatted segment data fields) with File-AID/MVS Option 7.
4. Use File-AID/MVS Option 9 to reformat the extract file.
   a. On the FROM Layout Specification screen, enter the XREF created in Step 2, with a record type 1 value of the segment name to be reformatted.
   b. On the TO Layout Specification screen, enter the XREF created in Step 3, with a record type 1 value of the segment name to be reformatted.
   c. Enter the reformatting instructions.
   d. On the Dataset Specification screen, enter the extract file as the FROM dataset and the new reformatted extract file as the TO dataset.
5. After the reformat is complete, load the new extract file into your database with File-AID for IMS/ISPF Option 4.2, Load.

Changing Segment Length

The segment length can be changed by increasing or decreasing the length of the records on the extract file. The segment length is computed by taking the record length and subtracting the prefix length. For variable length segments, the length of the record on the extract file is always used to determine the segment length, not the two-byte Length field that resides in the segment data. If this computed length is not valid for the segment type, the segment is padded or truncated during the load process to a valid segment length. For variable length segments, this adjustment is the minimum segment length if the segment was too short or the maximum segment length if the segment was too long.

Because the extract file has variable length records, the record length cannot be directly modified using the ISPF/PDF editor. However, Compuware's File-AID/MVS file management product enables you to directly change the record length when editing in unformatted mode. For variable length segments, it is not necessary to change the two-byte Length field in the segment data. When the segment is loaded, the two-byte Length field is computed and filled in.

Adding or Deleting Segment Occurrences Without Changing the DBD

The number of segments to be loaded can be changed by directly editing the extract file with the ISPF/PDF editor or Compuware's File-AID/MVS file management product. Under most circumstances, there are no other considerations other than to use the correct prefix on added records.

By adding or deleting records for a particular segment type on the extract file, segment types can be added to or removed from the database. This process is easiest when the added/deleted segment type does not have any subordinate segment types in the hierarchy. Following are some considerations for adding/deleting segment types:

- The CONCATENATED-KEY-REMAINDER-PREFIX field for segment types below the added/deleted segment type may need to be modified to include/remove the key of the segment that is being added or deleted.

  Note: Do not change the length of the CONCATENATED-KEY-REMAINDER field.

- If the added/deleted segment type has a nonunique concatenated key and is below a logical child segment type in the hierarchy, the POSITIONING-COUNT-PREFIX field may need to be set (for added segment types) or adjusted (for segments below a deleted segment type).

When adding or deleting segment types in the extract file, the existing header record is used to calculate the length of the CONCATENATED-KEY-REMAINDER field. Deletion of the header record is not recommended. However, if a header does not exist on the file, the information is calculated from the DBDs used during the load process.

Changing the DBD

To allow for minor changes to the database structure, the DBDs used during the Extract function can be different than the ones used during the Load function. If they are different, the contents of the extract file may need to be adjusted prior to the load. Following are some of the areas that can affect the contents of the extract file:

1. Added or deleted segment types.

   Refer to "Adding or Deleting Segment Occurrences Without Changing the DBD" on page 6-62 for considerations that apply when adding or deleting segment type occurrences to the extract file. In addition, it may be necessary to make changes when the DBDs used in the Extract and Load functions are different. The following considerations apply when the DBDs used during extract and load are different:

   - Any record remaining in the extract file that contains a deleted segment type is not loaded, and a message is written to the Data Base Load Exception Report.
   - If the added segment type increases the length of the longest concatenated key for all segments in the databases (including logically related databases), then the following fields in the extract file must be changed:
     - The length of the CONCATENATED-KEY-REMAINDER PREFIX field must be increased in all records in the extract file.
     - The EXTRACT-FILE-PREFIX-LENGTH field value in the header record must be increased to reflect the change in the length of the CONCATENATED-KEY-REMAINDER field.

       Note: Deleted segment types that affect the length of the longest concatenated key (by reducing its length) do not need to have the CONCATENATED-KEY-REMAINDER field changed, as long as the header record generated during the extract remains unchanged in the extract file.

2. Added or deleted logical relationships.

When a logical relationship is deleted, references to database records in the deleted logical relationship should be removed from the extract file. The use of the DATA-BASE-NUMBER and the DATA-BASE-DBD-NAME fields in the prefix can be helpful when determining which records to delete from the extract file. Any of these logically related extract records that remain on the file are not loaded, and a message is written to the Data Base Load Exception Report.

When a logical relationship is added, the HEADER RECORD andPREFIX LAYOUT fields can be affected. If the added logical relationship includes a database that affects either the longest concatenated key or the longest root key for all the databases, then the following fields must be changed:

- The length of the CONCATENATED-KEY-REMAINDER PREFIX field must be increased in all the records in the extract file if the longest concatenated key has changed.
- The EXTRACT-FILE-PREFIX-LENGTH field value in the header record must be increased to reflect the change in the length of the CONCATENATED-KEY-REMAINDER field.
- The length of the DATA-BASE-RECORD-ROOT-KEY PREFIX field must be increased in all records if the longest root key has changed.
- The EXTRACT-FILE-MAX-ROOT-KEY-LGTH field value in the header record must be increased to reflect the change in the length of the DATA-BASE-RECORD-ROOT-KEY field.

3. Key length changes.

   The same considerations apply for differences in the key length as apply to adding/deleting a segment type with the longest key for all the databases. Refer to step 1 on page 6-62.

4. Converting Data Base Access Methods.

   Changing the database access method (for example, from HDAM to HIDAM) does not require a change to the extract file.

5. Loading with a different DBD name.

   Each record in the unload file contains the name of the DBD to use for that record. If the DBD used to load has a different name than the DBD used to unload, the DBD name in each record must be changed to match the DBD used at load time.

Comparing Data Bases

Files produced by the Extract function can be used to compare the contents of two versions of the same database. Use the following steps:

1. Extract from the first database, specify N for the Select Related Data Base Records field in sub-option 3, Specify Data Base Relationship Criteria, of Option 6.
2. Repeat Step 1 for the second database by specifying a different extract TO dataset.
3. If the databases use the HDAM access method, sort both files in the Processing Option L sort sequence (refer to “Sorting the Load From File” on page 6-59).
4. Use a file compare utility (for example, PANVALET/COMPARE, File-AID/MVS COMPARE, or COMPAREX) to compare the two extract files. Check for differences starting at the first record position after the extract file prefix. The output report from the compare utility indicates the differences between the two databases.

Extracting SDEP Segment Types From a DEDB Data Base

File-AID for IMS/ISPF supports extracting and inserting DEDB Sequential Dependent (SDEP) segment types. IMS stores the SDEPs in Last In First Out (LIFO) order. When the database's SDEPs are extracted, they are written to the extract file in the reverse order from when they were originally entered. File-AID for IMS/ISPF reverses the global sequence number on the SDEP extract records. When the file is run through the load job, it is sorted in the correct order. The result is that the SDEPs are loaded in the exact order that they were stored in the original database.

Converting a DEDB to an HDAM Data Base

File-AID for IMS/ISPF can be used to convert a FAST PATH DEDB database to a full-feature HDAM database. An HDAM database may be desired for testing online FAST PATH programs under BTS in DLI mode before moving these programs into the online region. Simply make a copy of the DEDB DBD and convert it to HDAM.

Some things that may need to be converted in the DBD are ACCESS=, RMNAME=, and AREA statements. Keep the DBD name and segment names the same, then generate the HDAM DBD into a separate DBD library. Extract the DEDB database to a file in BMP mode then load the HDAM database with this extract file using the new HDAM DBD in DLI mode. For more information, refer to "Changing the DBD" on page 6-62.

Extracting and Loading a VSAM KSDS File

All File-AID for IMS/ISPF functions can be used against a VSAM KSDS file if a SHISAM DBD is generated for it. Because a SHISAM DBD database dataset record does not contain any IMS prefix information, it is really just a VSAM KSDS file. As long as a SHISAM DBD is used, IMS uses normal VSAM calls against the file. Refer to the *IBM IMS Data Base Administration Guide* for further restrictions and how to generate the SHISAM DBD.

Database Extract Report

The Data Base Extract Report is generated after the extract job is submitted and executed. This report consists of the following parts as shown in Figure 6-33 on page 6-66 through Figure 6-40 on page 6-68:

- Data Base Dataset Summary
- Primary Data Base Summary
- Related Data Base Summary
- Selection Criteria Summary
- Relationship Criteria Summary
- Segment Criteria Summary
- Field Criteria Summary

Data Base Dataset Summary

The Data Base Dataset Summary (Figure 6-33 on page 6-66) shows the FROM database DBD library dataset names, the DBD member name, the application relationship dataset name if applied, and the extract job type. For BMP job types, the IMS System ID, PSB/ACB name, IMSID, and IMS RESLIB dataset names are also shown. The middle section shows all the databases with their associated ddnames and dataset names. This section is similar to the layout of the Data Base Dataset Specification screen. The bottom section shows the TO file dataset name and member name (if it is a PDS).

Note: When running as a BMP job, database dataset names can be determined only if your installation uses the dynamic database allocation features of IMS.

If File-AID for IMS cannot determine the dataset name, the message "UNABLE TO DETERMINE" is displayed in the Dataset Name field on the report.

Primary Data Base Summary

The Primary Data Base Summary (Figure 6-34 on page 6-66) shows a count of the segments read, rejected, and extracted based on selection criteria; segments extracted to resolve relationships; and the total number of segments extracted from the primary database. The counts are shown by segment name, with the level and segment hierarchy shown to the left of the segment name. Column totals are shown at the bottom of the page.

A note line displays after the segment totals. Based on the keys specified in selection criteria, the line indicates whether sequential or direct access to the root segments is used. For more information about root segment access, refer to “Direct Access Processing” on page 8-26.

Related Data Base Summary

The Related Data Base Summary (Figure 6-35 on page 6-67 and Figure 6-36 on page 6-67) shows information about each database related to the primary database. If there are no databases related to the primary database, this part of the report is omitted. Counts of the segments extracted to resolve logical relationships and application relationships are shown. A column total is shown at the bottom of the page.

Selection Criteria Summary

The Selection Criteria Summary (Figure 6-37 on page 6-67) is optional and shows the Select related data base records and Max data base segments to select values. This section also shows the selection criteria, DBDLIB, application relationship, segment/layout XREF, and the layout datasets specified on the Select Criteria - Dataset Specification screen in Option 6 the last time the selection criteria dataset was saved. Lastly, the short and extended description for the selection criteria member entered on the Selection Criteria - Menu of Option 6 is displayed.

Relationship Criteria Summary

The Relationship Criteria Summary (Figure 6-38 on page 6-68) lists the number of occurrences to chase for a logical relationship and/or application relationship. This section is optional and is similar to the layout of the Relationship Criteria screen in sub-option 3, Specify Data Base Relationship criteria, of Option 6. For any Occurrences to Chase fields not entered, the literal DEFAULT is used to indicate that the value for the Default max relationship occurrences to chase was used.

Segment Criteria Summary

The Selection Criteria Summary (Figure 6-39 on page 6-68) lists the Extract Segment indicator; Selection Interval Start, Select, and Skip values; and the Max Segs to Select Within Data Base, Data Base Record, and Parent Limits specified on the Segment Criteria screen in sub-option 1, Specify Segment Criteria, of Option 6.

Field Criteria Summary

The Field Criteria Summary (Figure 6-40 on page 6-68) lists the field selection criteria applied. The criteria set description, max database records to extract using this criteria set limit, and the number of database records extracted using this criteria set are shown, along with the Extract Segment and Extract Children indicators specified on the Segment List screen in sub-option 2, Specify Field Criteria, of Option 6.

For each criterion in each set of unformatted and formatted field criteria, the following information is listed:

- Number of segments that passed field criteria
- Starting position of the field within the segment
- Field length
- Relational operator
- Field value

For formatted field criteria, data-names are also listed.

If a particular segment satisfies multiple sets of field selection criteria, it is tallied only under the first set satisfied. If the selection criteria do not contain field selection criteria, this part of the report is omitted.

Figure 6-33. Data Base Extract Report - Data Base Dataset Summary

```
File-AID for IMS 7.1                DATA BASE EXTRACT REPORT                                  PAGE 1
FROM: FI.BAT.PORDR.DATA                     SUMMARY INFORMATION                                       DATE 2003-01-17
TO:   FI.UTILITY.UNLOAD                                                                               TIME 12:54:45

                      "DBRC" RECON1 DATASET:---DBRC IS NOT IN USE---
                                 DBD DATASET: FI.BAT.DBDLIB                                     MEMBER: PORDR
                                              FI.BAT.DBDLIB2
                                              FI.BAT.DBDLIB3
           APPLICATION RELATIONSHIP DATASET: FI.BAT.APPLREL

                                 EXTRACT JOB TYPE: DLI

                                 DATA BASE DATASET(S)

     DBD       DDNAME          DATASET NAME                        ALLOCATION   DISP   DBRC REGISTRATION   SHR-LEV
   -------   --------   -------------------------------------   -----------  -----  -------------------  -------
    PORDR     PORDRDD    FI.BAT.PORDR.DATA                         JCL         SHR     DBRC NOT ACTIVE       N
    PCUST     PCUSTDD    FI.BAT.PCUST.DATA                         JCL         SHR     DBRC NOT ACTIVE       N
    PPART     PPARTDD    FI.BAT.PPART.DATA                         JCL         SHR     DBRC NOT ACTIVE       N
```

Figure 6-34. Data Base Extract Report - Primary Data Base Summary

```
File-AID for IMS 7.1                        DATA BASE EXTRACT REPORT                                PAGE 2
FROM: FI.BAT.PORDR.DATA                     SUMMARY INFORMATION                                     DATE 2003-01-17
TO:   FI.UTILITY.UNLOAD                                                                             TIME 12:54:45

        PRIMARY DATA BASE

                                          ------ USING SELECTION CRITERIA -------   SEGS EXTRACTED       TOTAL
                                 SOURCE     SEGMENTS      SEGMENTS      SEGMENTS       TO RESOLVE       SEGMENTS
             LEVEL               SEGMENT      READ        REJECTED      EXTRACTED    RELATIONSHIPS      EXTRACTED
          ---------------       --------   -----------   -----------   -----------   --------------   -----------
          1 DBD-PORDR           ORDR010            6             4             2                0              2
           2                    ORDR020            5             0             5                0              5
             3                  ORDR030            9             0             9                0              9
           2                    ORDR040            2             0             2                0              2
           2                    ORDR050            4             0             4                0              4
                                          ---------     ---------     ---------     ------------     ---------
          TOTALS                                 26             4            22                0             22

          NOTE: DATA BASE ACCESS WAS SEQUENTIAL
```

Figure 6-35. Data Base Extract Report - Related Database Summary, Part 1

```
File-AID for IMS 7.1                        DATA BASE EXTRACT REPORT                        PAGE 3
FROM: FI.BAT.PORDR.DATA                    SUMMARY INFORMATION                             DATE 2003-01-17
TO:   FI.UTILITY.UNLOAD                                                                    TIME 12:54:45

        RELATED DATA BASE

                                                          SEGS EXTRACTED
                                                SOURCE      TO RESOLVE
                                    LEVEL       SEGMENT   RELATIONSHIPS
                              ---------------  --------  --------------
                              1 DBD-PCUST      CUST010              2
                               2               CUST020              4
                                 3             VORDR050             4
                                                          ------------
                              TOTALS                              10
```

Figure 6-36. Data Base Extract Report - Related Data Base Summary, Part 2

```
File-AID for IMS 7.1                    DATA BASE EXTRACT REPORT                          PAGE 4
FROM: FI.BAT.PORDR.DATA                  SUMMARY INFORMATION                             DATE 2003-01-17
TO:   FI.UTILITY.UNLOAD                                                                  TIME 12:54:45

        RELATED DATA BASE

                                                          SEGS EXTRACTED
                                                SOURCE      TO RESOLVE
                                    LEVEL       SEGMENT   RELATIONSHIPS
                              ---------------  --------  --------------
                              1 DBD-PPART      PART010              0
                               2               PART020              0
                                                          ------------
                              TOTALS                               0
```

Figure 6-37. Data Base Extract Report - Selection Criteria Summary

```
File-AID for IMS 7.1                     DATA BASE EXTRACT REPORT                                  PAGE 5
                                        SELECTION CRITERIA SUMMARY                                DATE 2003-01-17
                                                                                                  TIME 12:54:45


    SELECTION CRITERIA DATASET: CW.FISAMP.SELCRIT                                  MEMBER: PORDR

   SELECTION CRITERIA CONTENTS:

            SELECT RELATED DATA BASE RCDS  =         Y

         MAX DATA BASE SEGMENTS TO SELECT  =         0   (0 = NO LIMIT)

      DATASETS SPECIFIED AT TIME OF SAVE:

                         SEL CRIT DATASET = CW.FISAMP.SELCRIT
                                   MEMBER = PORDR

                           DBDLIB DATASET = CW.FISAMP.DBDLIB1
                                   MEMBER = PORDR

                         APPL REL DATASET = CW.FISAMP.APPLREL

                   SEG/LAYOUT XREF DATASET = CW.FISAMP.XREF
                                   MEMBER = PORDR

                    COBOL LAYOUT DATASET 1 = CW.FISAMP.COBOLLIB
                                 DATASET 2 = NOT USED

      DESCRIPTION: ORDER SELECTION
                   SELECT ORDERS BY CUSTOMER NUMBER
```

Figure 6-38. Data Base Extract Report - Relationship Criteria Summary

```
File-AID for IMS 7.1                      DATA BASE EXTRACT REPORT                                    PAGE 6
                                        SELECTION CRITERIA SUMMARY                                   DATE 2003-01-17
                                                                                                     TIME 12:54:45
                                         RELATIONSHIP CRITERIA

       DEFAULT MAX RELATIONSHIP OCCURRENCES TO CHASE =        0  (0 = NO LIMIT)

       SOURCE     SOURCE    RELATED                                  OCCURRENCES
        DBD        SEG        DBD              COMMENT                 TO CHASE
      --------   --------   --------   ---------------------------   -----------
      PORDR
                 ORDR020    PPART      APPLICATION RELATIONSHIP        DEFAULT
                 ORDR050    PCUST      IMS LOGICAL BI-DIRECTIONAL          5
      PCUST
                 VORDR050   PORDR      IMS LOGICAL BI-DIRECTIONAL          3
                           *** END OF RELATIONSHIPS ***
```

Figure 6-39. Data Base Extract Report - Segment Criteria Summary

```
File-AID for IMS 7.1                        DATA BASE EXTRACT REPORT                                    PAGE 7
                                          SELECTION CRITERIA SUMMARY                                   DATE 2003-01-17
                                                                                                       TIME 12:54:45
                                          SEGMENT CRITERIA

                            EXTRACT  SELECTION INTERVAL:          MAX SEGS TO SELECT WITHIN:
    -----LEVEL----- --SEG--- SEGMENT  -START-- -SELECT- --SKIP--    ---DB--- -DB RCD- -PARENT-
    1 DBD-PORDR     ORDR010     Y           1        1        0           0        0        0
     2              ORDR020     Y           1        1        0           0        0        0
      3             ORDR030     Y           1        1        0           0        0        0
     2              ORDR040     Y           1        1        0           0        0        0
     2              ORDR050     Y           1        1        0           0        0        0
                                   *** END OF SEGMENT LIST ***

    NOTE: UNDER THE "MAX SEGS TO SELECT WITHIN:" HEADING, A VALUE OF 0 MEANS NO LIMIT WAS SET ON THE NUMBER
          OF SEGMENTS TO SELECT
```

Figure 6-40. Data Base Extract Report - Field Criteria Summary

```
File-AID for IMS 7.1                      DATA BASE EXTRACT REPORT                                    PAGE 8
                                         SELECTION CRITERIA SUMMARY                                DATE 2003-01-17
                                                                                                     TIME 12:54:45
                                           FIELD CRITERIA


 -SET NO-  ----------------DESCRIPTION---------------------  --MAX DB RCDS TO EXTRACT--  --DB RCDS EXTRACTED--
     1      CRITERIA SET #1                                                0 (0 = NO LIMIT)               2

                                     EXTRACT    EXTRACT
           -----LEVEL-----  --SEG---  --SEG--  --CHILDREN--  --TOT SEGS EXTRACTED IN SET--
           1 DBD-PORDR      ORDR010     Y          A                          2
            2               ORDR020     Y                                     5
             3              ORDR030     Y                                     9
            2               ORDR040     Y                                     2
            2               ORDR050     Y                                     4
                                     *** END OF SEGMENT LIST ***

              FLD    SEGS
    SEGMENT   CRIT  PASSED        DESCRIPTION/DATA-NAME     START   LGTH   FORMAT   REL OP     FIELD VALUE
    --------  ----  -------     -------------------------  ------- -----  --------  ------  ---------------

     ORDR010      1        1   UNFORMATTED CRITERIA #1 DESCR
                               UNFORMATTED CRITERIA                3      4  C   4  K    =     4444

                  2        1   FORMATTED CRITERIA #1 DESCR
                               CUSTOMER-NUMBER                    47      6  C   6       =     CN0055
                               FIRST-ACTIVITY-DATE-YR             71      4  C   4       =     1988


                                          **** E N D   O F   R E P O R T ****
```

Database Load Reports

After the load job is submitted and executed, several reports can be produced. Some of the reports are generated by File-AID for IMS/ISPF, while others are from utility programs. Figure 6-41 through Figure 6-45 on page 6-72 show the File-AID for IMS reports that can be generated. Not all reports are produced every time.

The first report, shown in Figure 6-41 on page 6-70, is the Data Base Load Exception Report. In this report, error messages that describe problems that File-AID for IMS encountered during the load process are written. The concatenated key for the segment that is in error is shown below the error message, if applicable. If there were no errors during the load process, this report is omitted.

The second report is the Data Base Load Report. It consists of the following parts:

- Data Base Dataset Summary (Figure 6-42)
- Primary Data Base Summary (Figure 6-43)
- Related Data Base Summary (Figure 6-44 and Figure 6-45)

Data Base Dataset Summary

The top section of the Data Base Dataset Summary (Figure 6-42 on page 6-71) shows the FROM extract file name, the TO DBD dataset and member names, the load job type, and update mode. The bottom section shows all the databases with their associated ddnames and dataset names. This section is similar to the layout of the Data Base Load - Data Base Dataset Specification screen.

Note: When running as a BMP job, database dataset names can be determined only if your installation uses the dynamic database allocation features of IMS. If File-AID for IMS/ISPF cannot determine the dataset name, the message "UNABLE TO DETERMINE" is displayed in the Dataset Name field on the report.

Primary Data Base Summary

The Primary Data Base Summary (Figure 6-43 on page 6-71) shows a count of the records read from the load FROM file, the segments loaded into the primary database, and the segments that were not loaded because of an error. The counts are shown by segment name, with the level and segment hierarchy shown to the left of the segment name. Informational messages that pertain to segment types are shown to the right of the Exception Segments column. Column totals are shown at the bottom of the page.

Related Data Base Summary

The Related Data Base Summary (Figure 6-44 on page 6-72 and Figure 6-45 on page 6-72) shows information about each database related to the primary database. If there are no databases related to the primary database, this part of the report is omitted. Counts of the records read from the load FROM file, the number of segments loaded into the related database to resolve logical and application relationships, and the number of segments not loaded because of an error are shown. Informational messages that pertain to segment types are shown to the right of the Exception Segments column. Column totals are shown at the bottom of the page.

There are four informational messages that can appear on the Primary and Related Data Base Summary reports to the right of the Exception Segments column. Following are the possible messages:

SEGMENT PADDED/TRUNCATED

At least one segment occurrence of this segment type was padded with blanks or truncated. This action was taken because the segment length indicated on the load FROM file record was not valid for the segment in the DBD used for the load.

LCHILD SEG x USED FOR LOAD

Segment type x, which is logically paired with this segment type, was used during the load to establish the logical relationship. File-AID for IMS/ISPF chose segment type x based on the rules explained in "Advanced Topics" on page 6-54.

LCHILD MAY LINK TO 1ST LOG. PARENT

This segment type may have been linked to the first occurrence of its logical parent segment type and not to the logical parent occurrence where it was originally linked. This is possible because the logical parent did not have a unique concatenated key.

SOME LCHILD NOT ISRTD, NO LOG. PAR

At least one logical child segment that File-AID for IMS/ISPF attempted to insert did not have a logical parent on the database. This occurs when selection criteria was used by the Extract function to limit the number of logical relationships chased. The Exception Segment count is incremented for each logical child segment that was not inserted because of this condition.

Figure 6-41. Data Base Load Exception Report

```
File-AID for IMS 7.1                                DATA BASE LOAD REPORT                                    PAGE 1
FROM: CW.FISAMP.UNLOAD                                 EXCEPTION REPORT                                      DATE 2002-07-07
TO:   CW.FISAMP.PORDRDD1                                                                                         TIME 12:47:75
TO:   CW.FISAMP.PORDRDD1                                                                                         TIME 12:47:75

 ERROR MESSAGE/
      CONCATENATED KEY                                                                                    DBD    SEGMENT  LEVEL
 ---------------------------------------------------------------------------------------------------------- -------- -------- -----

 X908 UNABLE TO INSERT SEGMENT - STATUS CODE = II                                                        PORDR    ORDR010    1

      CONCAT KEY:  AA4444
                   CCFFFF
                   114444

 X908 UNABLE TO INSERT SEGMENT - STATUS CODE = II                                                        PORDR    ORDR020    2

      CONCAT KEY:  AA444401
                   CCFFFFFF
                   11444401

 X908 UNABLE TO INSERT SEGMENT - STATUS CODE = II                                                        PORDR    ORDR030    3

      CONCAT KEY:  AA44440101
                   CCFFFFFFFF
                   1144440101

                                          **** E N D   O F   R E P O R T ****
```

Figure 6-42. Data Base Load Report - Data Base Dataset Summary

```
File-AID for IMS 7.1                                DATA BASE LOAD REPORT                                    PAGE 1
FROM: IX.UTILITY.UNLOAD                             SUMMARY INFORMATION                                     DATE 2002-07-07
TO:   IX.UTILITY.PORDR.TEMP                                                                                 TIME 12:04:39

                          "DBRC" RECON1 DATASET:---DBRC IS NOT IN USE---
                            "FROM" EXTRACT FILE:  IX.UTILITY.UNLOAD
                               "TO" DBD DATASET:  IX.UTILITY.DBDLIB                          MEMBER: PORDR
                                    PSB DATASET:  IX.UTILITY.PSBLIB                          MEMBER:  DEMOPSB1

                                 LOAD JOB TYPE:     DLI
                                 PROCESSING OPTION: UPDATE

                                 DATA BASE DATASET(S)

     DBD       DDNAME          DATASET NAME                      ALLOCATION   DISP   DBRC REGISTRATION   SHR-LEV
   -------   --------   ------------------------------------   -----------  -----  -------------------  -------
    PORDR     PORDRDD    IX.UTILITY.PORDR.TEMP                   DYNAMIC     OLD     DBRC NOT ACTIVE       N
    PCUST     PCUSTDD    IX.UTILITY.PCUST.TEMP                   DYNAMIC     OLD     DBRC NOT ACTIVE       N
    PPART     PPARTDD    IX.BAT.PPART.DATA                       DYNAMIC     OLD     DBRC NOT ACTIVE       N
```

Figure 6-43. Data Base Load Report - Primary Data Base Summary

```
File-AID for IMS 7.1                          DATA BASE LOAD REPORT                                    PAGE 2
FROM: CW.FISAMP.UNLOAD                        SUMMARY INFORMATION                                     DATE 2002-07-07
TO:   CW.FISAMP.PORDRDD1                                                                              TIME 12:04:39

         PRIMARY DATA BASE

                                                SOURCE       RECORDS      SEGMENTS      EXCEPTION
                                     LEVEL      SEGMENT       READ         LOADED       SEGMENTS
                                ---------------  --------   -----------   -----------   -----------
                                1 DBD-PORDR      ORDR010           3             3             0
                                 2               ORDR020           8             8             0
                                  3              ORDR030          10            10             0
                                 2               ORDR040           3             3             0
                                 2               ORDR050           7             7             0
                                                           ---------     ---------     ---------
                                TOTALS                            31            31             0
```

Figure 6-44. Data Base Load Report - Related Data Base Summary (Part 1)

```
File-AID for IMS 7.1                                DATA BASE LOAD REPORT                                    PAGE 3
FROM: CW.FISAMP.UNLOAD                              SUMMARY INFORMATION                                     DATE 2002-07-07
TO:   CW.FISAMP.PORDRDD1                                                                                        TIME 12:04:39

        RELATED DATA BASE

                                          SOURCE      RECORDS     SEGMENTS     EXCEPTION
                                LEVEL     SEGMENT      READ        LOADED      SEGMENTS
                            ---------------  --------  -----------  -----------  -----------
                            1 DBD-PCUST     CUST010          3            3            0
                             2              CUST020          6            6            0
                              3             VORDR050         7            0            0  LCHILD SEG ORDR050 USED FOR LOAD
                                                      ---------    ---------    ---------
                            TOTALS                          16            9            0
```

Figure 6-45. Data Base Load Report - Related Data Base Summary (Part 2)

```
File-AID for IMS 7.1                                DATA BASE LOAD REPORT                                    PAGE 4
FROM: CW.FISAMP.UNLOAD                              SUMMARY INFORMATION                                     DATE 2002-07-07
TO:   CW.FISAMP.PORDRDD1                                                                                        TIME 12:04:39

        RELATED DATA BASE

                                          SOURCE      RECORDS     SEGMENTS     EXCEPTION
                                LEVEL     SEGMENT      READ        LOADED      SEGMENTS
                            ---------------  --------  -----------  -----------  -----------
                            1 DBD-PPART     PART010          1            1            0
                             2              PART020          0            0            0
                                                      ---------    ---------    ---------
                            TOTALS                           1            1            0

                                          **** E N D   O F   R E P O R T ****
```

Chapter 7.
Print

Option 5, Print, is used to print the contents of the audit trails you created when you edited the databases in Option 2, or using the File-AID for IMS/FLEX option. If you do not specify a sub-option on the Primary Option Menu, the Print Selection Menu screen is displayed. If you specify a sub-option, this screen is skipped.

Figure 7-1. Print Selection Menu Screen

```
File-AID for IMS  ---------  Print Selection Menu  ----------------------------
OPTION  ===>
ENV: DEV1 - DEVELOPMENT ENVIRONMENT WITH CONCATENATIONS

   1-4  NOT AVAILABLE          - Reserved for future use

     5  PRINT AUDIT TRAIL      - Print the contents of an audit trail
```

Enter 5 in the Option field, and press Enter. The Print Audit Trail screen (Figure 7-2) is displayed. Enter the END, RETURN, or a jump command to exit the print option.

Print Audit Trail Screen (Online Conversation)

The Print Audit Trail screen is used to print the contents of the audit trail that you created using Option 2, or the File-AID for IMS/FLEX option, to edit a database. This screen is displayed when you select the sub-option from the Print Selection Menu.

Figure 7-2. Print Audit Trail Screen

```
File-AID for IMS  -----------  Print Audit Trail  ----------------------------
COMMAND ===>

Audit trail disposition . . . PD   (PK = Print dataset and keep
                                    PD = Print dataset and delete)

Audit trail dataset . . . . .
-------------------------------------------------------------------------------
Specify batch JCL information:
             Sysout class . . *
             Print format . . F    (F = Formatted; H = Hexadecimal)
Print only changed fields . . N    (Y = Yes; N = No)

  JOB statement information:
> //XXXXXXX JOB (XXXXXXX),'FILE-AID PRINT',
> //   MSGCLASS=A,NOTIFY=XXXXXXX
> /*ROUTE  PRINT U1326
> //*JOBPARM FORMS=LCAL

Enter JCL command to edit generated JCL
Press ENTER to submit batch job
```

Audit Trail Disposition

Enter PK if you want to print and keep the audit trail. Enter PD if you want to print and delete the audit trail.

Audit Trail Dataset

Enter the dataset name of the audit trail you want printed. This dataset could have been created by File-AID for IMS/ISPF directly or manually by the user from the system SMF log file. Refer to “Retrieving Audit Trail from SMF” on page 7-4.

Sysout Class

Enter the output class that you want the Audit Trail Report written to.

Print Format

Indicate whether you want the Audit Trail Report printed in a formatted or hexadecimal mode.

F In formatted mode, the database segment images contained in the audit trail are printed using COBOL or PL/I segment layouts, in a manner similar to the edit formatted sub-option.

H In hexadecimal mode, the segment images are printed in a three-line hexadecimal format, similar to HEX mode of the edit unformatted sub-option.

Note: If you specify F in the Print format field, File-AID for IMS/ISPF attempts formatted printing using the segment layouts that were used during the original database edit session that created the audit trail. If the segment layouts cannot be found or if segment layouts were not used in the original edit session, the report is printed in hexadecimal format.

Print Only Changed Fields

Indicate how you want File-AID for IMS to print the before and after images of changed segments on the Audit Trail Report.

Y Only the fields that you changed are printed. Unchanged fields are excluded from printing.

N All fields in changed segments are printed. However, your entry does not affect the printing of inserted, repeated, and deleted segment images (that is, all fields are printed).

Job Statement Information

Enter the JOB statement JCL for the batch print job.

Terminating the Screen

Do the following to terminate the Print Audit Trail screen:

- Press Enter to generate the JCL and submit the print job for execution.
- Enter the JCL command to proceed to an ISPF/PDF Edit screen (Figure 7-3), where you can edit the generated JCL before submitting it.
- Enter the END, RETURN, or a jump command to leave this screen without submitting the batch print job.

Editing the Generated JCL

If you enter the JCL command on the Print Audit Trail screen, an ISPF/PDF Edit screen similar to the one shown in Figure 7-3 is displayed.

Figure 7-3. ISPF/PDF Edit Screen

```
EDIT ---- CW.SPFTEMP1.CNTL ------------------------------------- COLUMNS 001 072
COMMAND ===>                                                     SCROLL ===>
****** ******************************** TOP OF DATA ****************************
000001 //ATRPT JOB (XEQ,CWX),'ACCT1',CLASS=E,PRTY=8
000002 /*ROUTE XEQ LOCAL
000003 /*ROUTE OUTPUT LOCAL
000004 //*
=NOTE= YOU ARE NOW EDITING THE JCL THAT FILE-AID HAS GENERATED TO PERFORM
=NOTE= THE REQUIRED FUNCTION.  YOU CAN CHANGE THIS JCL IF DESIRED, AND USE
=NOTE= THE SUBMIT PRIMARY COMMAND TO SUBMIT THE JOB.  TO KEEP THIS JCL FOR
=NOTE= FUTURE USE, USE THE CREATE OR REPLACE PRIMARY COMMAND.  ENTER THE
=NOTE= END COMMAND TO EXIT THE FUNCTION WITHOUT SUBMITTING THE JOB.
000005 //*-------------------------------------------------------------*
000006 //* FILE-AID FOR IMS/ISPF AUDIT TRAIL REPORT:                   *
000007 //*   THIS STEP PRODUCES AN AUDIT TRAIL REPORT FROM AN AUDIT    *
000008 //*   TRAIL DATASET CREATED DURING AN FILE-AID FOR IMS/ISPF     *
000009 //*   USER DATA BASE EDIT SESSION                               *
000010 //*-------------------------------------------------------------*
000011 //ATRPT    EXEC PGM=IXPATRPI,REGION=1024K,
000012 //             PARM='/NNF603'
000013 //STEPLIB  DD DSN=CW.FI.LOAD,DISP=SHR              FILE-AID LOAD LIB
000014 //*        DD DSN=XXXXXXX.PANVALET.LOAD,DISP=SHR   PANVALET LOAD LIB
000015 //*        DD DSN=XXXXXXX.LIBARIAN.LOAD,DISP=SHR   LIBRARIAN LOAD LIB
000016 //IXPMLIB  DD DSN=CW.FI.MLIB, DISP=SHR             FILE-AID MSG LIB
```

At this point, the ISPF/PDF editor has been invoked on the temporary dataset that contains the JCL generated to produce the Audit Trail Report. All ISPF Edit commands are available for use. For example, to insert additional JCL statements, use the I (Insert) line command. To change the JCL, type over the data. To delete a line, use the D (Delete) line command. You can use the CREATE and REPLACE primary commands to save the

generated JCL into a partitioned (PDS) or sequential dataset, which enables you to submit the JCL without using the online Print Audit Trail screen.

When you want to concatenate multiple audit trail datasets to produce a separate Audit Trail Report for each dataset with one batch job execution is an example of when you need to edit the generated JCL before submitting the batch print job.

Do the following after you view or edit the JCL:

- Enter the SUBMIT command to submit the Audit Trail Report job for execution. The Audit Trail Report described on page 7-6 is generated.
- Enter the END or CANCEL command to return to the Print Audit Trail screen.

Retrieving Audit Trail from SMF

The JCL shown below can be coded and submitted to retrieve the audit trail from the SMF log file. Using the sort control fields in this example will remove the SMF header fields from the sorted output record. The sorted output record, with the SMF header removed, is in the proper format to be processed by the File-AID for IMS Audit Trail Print program.

```
//STEP0001  EXEC  PGM=IFASMFDP
//SYSPRINT  DD  SYSOUT=*
//DUMPIN    DD  DSN=your.system.SMF.log.file,DISP=SHR
//DUMPOUT   DD  DSN=your.name.of.choice,
//              DISP=(NEW,PASS,DELETE),
//              DCB=*.DUMPIN,
//              UNIT=unit,SPACE=(ttt,(nn,nn),RLSE)
//SYSIN     DD  *
 INDD(DUMPIN,OPTIONS(DUMP))
 OUTDD(DUMPOUT,TYPE(your SMF record id))
//*
//STEP0002  EXEC  PGM=SORT,REGION=2048K,COND=(0,LT)
//SYSUDUMP  DD  SYSOUT=D
//SYSPRINT  DD  SYSOUT=*
//SYSOUT    DD  SYSOUT=*
//SORTIN    DD  DSN=*.step0001.DUMPOUT,
//              DISP=(OLD,DELETE,DELETE)
//SORTOUT       DD  DSN=your.name.of.choice,
//              DISP=(NEW,CATLG,DELETE),
//              DCB=(RECFM=VB,LRECL=32756,BLKSIZE=32760),
//              SPACE=(ttt,(nn,nn),RLSE),UNIT=unit
//SORTWK01  DD  UNIT=unit,SPACE=(ttt,(nn,nn),RLSE)
//SORTWK02  DD  UNIT=unit,SPACE=(ttt,(nn,nn),RLSE)
//SORTWK03  DD  UNIT=unit,SPACE=(ttt,(nn,nn),RLSE)
//SYSIN     DD  *
  SORT      FIELDS=(52,08,CH,A,
            11,04,CH,A,
            07,04,CH,A,
            15,04,CH,A,
            28,08,CH,A,
            35,01,CH,A,
            44,08,CH,A)
  INCLUDE   COND=(06,01,CH,EQ,X'DD'(hex representation of SMF ID))
  OUTREC    FIELDS=(1,4,81)
/*
//*
//
```

Print Audit Trail (Batch Stream)

The JCL shown below can be coded and submitted to execute the print audit trail process without invoking the online File-AID for IMS/ISPF screens. This procedure can be useful when you want to print multiple audit trail datasets in one execution of the audit trail

report program. To simplify the coding of this JCL refer to "Editing the Generated JCL" on page 7-3.

```
//STEPNAME  EXEC PGM=IXPATRPI,REGION=1024K,
//          PARM='parameter information'
//STEPLIB   DD DSN=File-AID-load-lib,DISP=SHR
//IXPMLIB   DD DSN=File-AID-message-lib,DISP=SHR
//SYSOUTT   DD SYSOUT=output-class
//IXPAT     DD DSN=audit-trail-dataset-1,DISP=disposition
//          DD DSN=audit-trail-dataset-2,DISP=disposition
//          DD DSN=audit-trail-dataset-3,DISP=disposition
            .
```

The parameter information in the PARM field on the EXEC statement must have the following format:

Table 7-1. EXEC Statement PARM Field - Print Audit Trail in Batch

Description	Value	Start Posn	End Posn
Constant	/N	1	2
Print Only Changed Fields	Y or N	3	3
Print Format	F or H	4	4
Maximum Print Lines Per Page	20 to 99	5	6
Spacing Before Detailed Headers	1 to 5, or T	7	7
Data Format	E, D, or M	8	8
Terminal Type		9	16
Note: Data format values of D and M are valid only for Double-Byte Character Set (DBCS) support.			

The Print Only Changed Fields and Print Format parameters and their allowable values are explained more fully on page 7-3.

The Maximum Print Lines Per Page and Spacing Before Detailed Headers parameters are common report parameters that are explained more fully in "Specify print parameters" on page 2-5.

The Terminal Type is used to determine the correct character set for the terminal and should be the same as defined in ISPF Option 0.1 (ISPF Terminal Characteristics).

In the following example, the Audit Trail Report is generated in the formatted mode, showing only the changed fields on updated segment images with 66 print lines per page and three blank lines appearing before each set of segment heading lines. The data format is EBCDIC and the terminal type is 3278:

```
// PARM='/NYF663E3278'
```

Each DD statement is described below:

Table 7-2. DD Statements to Execute Print Audit Trail Independently In Batch

DD Statement	Description
STEPLIB	Designates the library where the File-AID for IMS/ISPF load modules are stored.
IXPMLIB	Designates the library that contains File-AID for IMS/ISPF messages.
SYSOUT	Designates the output class for the Audit Trail Report.
IXPAT	Designates the audit trail datasets to be printed. Multiple audit trail datasets can be concatenated together and printed in one execution. The disposition can be SHR, (OLD,KEEP), or (OLD,DELETE).

An audit trail print execution return code (RC) appears in the output listing. For return code 16, an error message that indicates the problem also appears in the listing. In general, the return codes can be summarized as follows:

```
RC   Explanation                Description
0    job ran to completion      none
4    job ran to completion      unable to print segment image in formatted
mode
8    job may have ended         dataset related error
     prematurely
16   severe error occurred      system error
```

Audit Trail Report

The Audit Trail Report produced by the batch print job consists of the following parts:

- Audit trail contents, which are printed in a formatted or hexadecimal format or a combination of both
- Summary information

Figure 7-4 on page 7-10 through Figure 7-8 on page 7-13 are samples of the formatted and hexadecimal formats of the audit trail report.

Each page of the audit trail report begins with page headings that consist of the File-AID for IMS/ISPF release number, the dataset and DBD names of the database that was updated, the page number, and the date and time the report was generated.

Following the page headings on page one are the audit trail dataset name, the date and time the database was opened for updating, and the TSO user ID that was used to perform the updates. The user's TSO-PREFIX is also shown when it differs from the TSO-ID.

Preceding the segment images of each database update, as it appears on the report, are audit trail segment headings. These headings always consist of at least two lines and can consist of several lines. The first line contains a sequential number assigned to each database update and the edit sub-option (Formatted, Unformatted, or Character) that was in use when the update was made. At the end of the first segment heading line is the phrase "SEGMENT update-action ON date AT time." Update-action can be INSERTED (for an inserted or repeated segment), DELETED, or UPDATED. The date and time show when the segment update-action was taken.

The second segment heading line contains the segment name and optional description, the segment's hierarchical level number in its database, and, for a multiple record type segment, the RCDTYPE 1 and 2 values. If either record type value contains non-displayable data, it appears in a three-line hexadecimal format.

The last segment heading lines show the fully concatenated key for that segment. The length of the fully concatenated key dictates the number of print lines shown. The key values for each segment type represented in the fully concatenated key are separated by commas. If any individual key value contains non-displayable data, the entire fully concatenated key appears in a three-line hexadecimal format.

File-AID for IMS/ISPF issues DL/I CHKP calls during your database edit session each time you enter the SAVE primary command and, automatically, after every *n* database updates when you establish a checkpoint interval through the RECOVERY primary command. CHKP calls are tracked by the audit trail feature and are reflected on the Audit Trail Report by a single segment heading line that is not followed by any segment images. The segment heading syntax is the same as previously described for the first segment heading line, except that CHECKPOINT OCCURRED ON date AT time appears at the end of the line.

The format used to print each segment image depends on what you specified in the Print format field on the Audit Trail Disposition screen (refer to "Audit Trail Feature" on page 4-75 or "Print Audit Trail Screen (Online Conversation)" on page 7-1).

Formatted Report Contents

When an audit trail segment image is printed in the formatted mode, File-AID for IMS/ISPF uses the same segment/layout XREF and segment layout datasets you specified during the edit session where the audit trail was created. The first two columns shown for each segment image contain the level number/data-name and format of each field in the segment layout in a format similar to the File-AID for IMS/ISPF edit formatted sub-option (refer to page 4-27).

The next two columns on the report are Before and After Field Value. The way these columns are formatted is determined by the segment update action shown on the first segment heading line.

When the update action is INSERTED, the After Field Value column contains the value of each field in the segment that was created. The Before Field Value column is always empty. When the update action is DELETED, the Before Field Value column contains the value of each field in the segment that was deleted. The After Field Value column is always empty. When the update action is UPDATED, the Before Field Value column contains the value of each field in the segment as it was before the change. The After Field Value column shows the new field value only for the fields that were changed. The After Field Value column is blank for unchanged fields.

Field values are shown in the Before and After Field Value columns in a format similar to the edit formatted sub-option (refer to page 4-28 for a description of the Field Value column), with one exception. In edit formatted, fields with invalid or unprintable data (given their field format) are represented by the word "INVALD." On the Audit Trail Report, invalid field contents are shown in a three-line hexadecimal format.

The rightmost column on the formatted Audit Trail Report is for informational messages. Following are the situations that generate a message:

- When an alphanumeric field is changed from a non-blank value to blanks (HEX 40s), the message "CHANGED TO SPACES" is printed. This message enables you to distinguish between fields that were not changed and those that were blanked out.
- When a field is changed from a valid value to an invalid value or when a field in an inserted segment contains an invalid value, the message "AFTER FIELD INVALID" is printed.
- When a field value is changed from an invalid value to a valid value or when a field in a deleted segment contains an invalid value, the message "BEFORE FIELD INVALID" is printed.
- When an unchanged field contains an invalid value, the message "FIELD INVALID" is printed.
- When a field is changed and both the before and after field values are invalid, the message "BOTH FIELDS INVALID" is printed.
- When the segment layout contains an occurs depending on clause and the value of the object of the occurs depending on is changed, either "n OCCURS ADDED" or "n OCCURS DELETED" is printed at the end of the segment layout where n is the number of occurrences that were added or deleted (COBOL only).

When a user updates an existing database segment, both a before and after image of the segment is written to the audit trail dataset. On the Audit Trail Disposition screen, you can specify that only the specific fields within the segment that were changed be printed on the Audit Trail Report (refer to “Audit Trail Feature” on page 4-75 or Figure 7-2 on page 7-2). This action causes all unchanged fields within the segment to be excluded from printing.

Unchanged fields that are not printed are replaced by a dashed print line ending with the phrase "x LINES/y BYTES NOT PRINTED." x is the number of excluded print lines, and y is the number of bytes of segment data not printed.

For keyed segments, the fields that make up the key value are always printed. Additionally, all higher level group data-names leading down to printed, changed fields are also printed. All fields in inserted and deleted segment images are always printed.

In some situations, even though you request formatted printing of the audit trail dataset, File-AID for IMS/ISPF is unable to do so. In these cases, an error message is printed that indicates the problem, and the entire Audit Trail Report is printed in an unformatted, hexadecimal format. Following are some of the conditions that create this result:

- N was specified for the Use Layouts field on the EDIT - Data Base Specification screen during the edit session in which the audit trail dataset was created. Therefore, segment/layout XREF and segment layout information are unavailable to File-AID for IMS/ISPF, preventing formatted printing.
- The segment/layout XREF dataset, XREF member, or segment layout datasets specified for the edit session that created the audit trail cannot be found by File-AID for IMS/ISPF during the Audit Trail Report processing. As before, this condition prevents formatted printing.

File-AID for IMS/ISPF is sometimes unable to print a particular audit trail segment image in the formatted manner, which causes that segment image to be printed in the hexadecimal format preceded by one or more error messages that indicate the problem. Following are some of the conditions that cause File-AID for IMS to switch from formatted to hexadecimal format:

- The record type value in the before and/or after segment image could not be found in the segment/layout XREF.
- The segment layout for the before and/or after segment image could not be found in the segment layout datasets.
- The segment layout for the before and/or after segment image has syntax errors.
- The segment layout for the before and/or after segment image contains an occurs depending on clause and the value for the object of the occurs depending on is non-numeric, outside the occurrence range defined in the segment layout, or causes the length of the segment to exceed the maximum segment length as defined in the database DBD (COBOL only).

Hexadecimal Report Contents

The Audit Trail Report is printed in hexadecimal format when H is specified in the Print Format field on the Audit Trail Disposition screen (refer to “Audit Trail Feature” on page 4-75 or the sub-option 5.5, Print Audit Trail screen described earlier). All or part of the report can also appear in hexadecimal format in several error situations that occur during the processing of a formatted print request. These error situations are described in “Formatted Report Contents” on page 7-7.

When printing the Audit Trail Report in hexadecimal format, each segment image is displayed in a three-line format similar to the hexadecimal mode of the edit unformatted sub-option. The top line represents the character representation of the segment, the middle line represents the upper half-byte of each character in HEX, and the third line represents the lower half-byte of each character in HEX. When a character cannot be displayed, it is represented by a period on the top line.

Up to 100 positions of the segment are printed in each set of three lines. The Seg Positions column immediately to the left of the segment contents indicates the starting and ending positions in the segment represented by each set of three lines.

When the update action shown on the first segment heading line is INSERTED, the Before/After column to the left of the inserted segment’s image contains "After." When the update action shown is DELETED, the Before/After column contains "Before" for the deleted segment’s image. When the update action shown is UPDATED, the entire pre-

change segment image is shown with "Before" in the Before/After column, followed by the entire post-change segment image with "After" in the Before/After column.

When showing the before and after images of a changed segment, the Audit Trail Report also indicates the segment positions that were changed. For both the before and after segment images, the positions that were changed are indicated by a bold-faced dash under each position. For each three-line set of print lines that contains changed segment positions, the bold-faced word CHANGE is printed to the left and below the print lines on the same line as the dashes.

If the segment updated during the edit session was variable length and you increased the length of the segment, the added segment positions are indicated by a bold-faced plus sign under each new position in the after segment image. If you decrease the length of a variable length segment, the deleted segment positions are indicated by plus signs under the before segment image. In both situations, the bold-faced word CHANGE appears to the left on the same line as the plus sign.

For keyed segments, the segment positions that make up the key value are indicated by a bold-faced asterisk under each position.

As when printing the Audit Trail Report in the formatted mode, you have the option of specifying on the Audit Trail Disposition screen that only the specific fields within an updated segment that you changed be printed in hexadecimal (refer to “Print Only Changed Fields” on page 7-3 or Figure 7-2 on page 7-2). Because, when printed in hexadecimal, a segment’s contents are in 100-byte long increments, the changed segment positions are printed as part of a 100-byte increment. Each 100-byte increment within a segment that contains no changed data is excluded from printing.

Increments of 100 bytes that are not printed are replaced by a dashed print line that contains the phrase "x POSITIONS NOT PRINTED," where x is the number of segment positions not printed.

All positions in inserted and deleted segment images are always printed.

Summary Information

The following summary information is printed on the last page of the Audit Trail Report (Figure 7-8 on page 7-13):

- The name of the audit trail dataset that was printed.
- The description of the audit trail entered on the Audit Trail Disposition screen (Figure 4-58 on page 4-76).
- The number of database segments that were inserted, deleted, or changed.
- The database dataset and DBD names.
- The DBD library dataset names.
- The segment layout library dataset names.
- The segment/layout XREF dataset name.
- The Audit Trail Report options used: print format, maximum number of lines printed per page, spacing before segment headers, and whether to print only changed fields on an update.
- The date and time when the edited database was closed.

Figure 7-4. Audit Trail Report - Formatted Print Mode, Part 1

```
File-AID for IMS 7.1                File-AID for IMS/ISPF AUDIT TRAIL REPORT                                    PAGE    1
DATA BASE:  CW.FISAMP.PORDRDD1                                                                                   DATE 2003-01-07
DBD NAME:   PORDR                                                                                                TIME 13:06:58

 AUDIT TRAIL FILE: CW.IXPAT.D900831.T130054
 DATA BASE OPENED ON 08/31/90 AT 13:00:54                                                                        USERID:  XXXXX


 DATA BASE UPDATE NUMBER:   1                  EDIT SUB OPTION:  FORMATTED                  SEGMENT UPDATED ON 08/31/99 AT 13:02:30
 SEGMENT NAME:  ORDR030     ORDER STATUS       LVL:   3

 CONCAT KEY:  AA2222,01,01

       LEVEL NUMBER/DATAAME       FORMAT      BEFORE FIELD VALUE            AFTER FIELD VALUE            MESSAGE
 ----------------------------------  --------  ------------------------------  ------------------------------  --------------------
 01  STATUS-DATA
   05  STATUS-KEY
     07  PROCESS-INDICATOR             Z   2  K  01
   05  MATERIAL-TYPE-INDICATOR         C   2     QA
   05  BEGIN-PROCESS-QTY               PS  5  2  24.00
   05  END-PROCESS-QTY                 PS  5  2  24.00
   05  PROCESS-STATUS-CODE             C   2     OK                                ..                              AFTER FIELD INVALID
                                                                                   00
                                                                                   11
   05  DESCRIPTION                     C  15     CUTTING
   05  FIRST-ACTIVITY-DATE             Z   8     19880214
   05  LAST-ACTIVITY-DATE              Z   8     19880306
 ** END OF LAYOUT. LENGTH =    45 **


 DATA BASE UPDATE NUMBER:         2            EDIT SUB OPTION:  CHARACTER<N>                  SEGMENT DELETED ON 08/31/99 AT 13:03:52
 SEGMENT NAME:  ORDR030     ORDER STATUS       LVL:   3

 CONCAT KEY:  AA4444,01,01

        LEVEL NUMBER/DATA-NAME          FORMAT         BEFORE FIELD VALUE              AFTER FIELD VALUE              MESSAGE
 ----------------------------------  --------  ------------------------------  ------------------------------  --------------------
 01  STATUS-DATA
   05  STATUS-KEY
     07  PROCESS-INDICATOR             Z   2  K  01
   05  MATERIAL-TYPE-INDICATOR         C   2     QA
   05  BEGIN-PROCESS-QTY               PS  5  2  24.00
   05  END-PROCESS-QTY                 PS  5  2  24.00
   05  PROCESS-STATUS-CODE             C   2     OK
   05  DESCRIPTION                     C  15     GRINDING
   05  FIRST-ACTIVITY-DATE             Z   8     19880214
   05  LAST-ACTIVITY-DATE              Z   8     19880306
 ** END OF LAYOUT. LENGTH =    45 **
```

Figure 7-5. Audit Trail Report - Formatted Print Mode, Part 2

```
File-AID for IMS 7.1                File-AID for IMS/ISPF AUDIT TRAIL REPORT                                    PAGE    2
DATA BASE:  CW.FISAMP.PRODRDD1                                                                                   DATE 2003-01-07
DBD NAME:   PORDR                                                                                                TIME 13:06:58

 DATA BASE UPDATE NUMBER:         3            EDIT SUB OPTION:  FORMATTED                  SEGMENT INSERTED ON 08/31/99 AT 13:05:35
 SEGMENT NAME:  ORDR040     ORDER SCRAP        LVL:   2

 CONCAT KEY:  AA8888,SSPA3428

        LEVEL NUMBER/DATA-NAME          FORMAT         BEFORE FIELD VALUE              AFTER FIELD VALUE              MESSAGE
 ----------------------------------  --------  ------------------------------  ------------------------------  --------------------
 01  SCRAP-DATA
   05  SCRAP-KEY
     07  PROCESS-INDICATOR             C   2  K                                  SS
     07  PART-NUMBER                   C   6  K                                  PA3428
   05  MATERIAL-TYPE-INDICATOR         C   2                                     MA
   05  SCRAP-QTY                       PS  5  2                                  8.00
   05  REASON-CODE                     C   2                                     OK
   05  DESCRIPTION                     C  15                                     GRINDING
   05  REWORK-INDICATOR                C   1                                     N
   05  SCRAP-DATE                      Z   8                                     19901201
 ** END OF LAYOUT. LENGTH =    40 **
```

Figure 7-6. Audit Trail Report - Formatted Print Mode, Part 3

```
File-AID for IMS 7.1                File-AID for IMS/ISPF AUDIT TRAIL REPORT                                    PAGE    3
                                              SUMMARY INFORMATION                                                DATE 2003-01-07
                                                                                                                 TIME 13:06:58


     AUDIT TRAIL FILE PRINTED:  CW.IXPAT.D900831.T130054
     AUDIT TRAIL DESCRIPTION:   SAMPLE OF File-AID for IMS/ISPF FORMATTED AUDIT TRAIL REPORT


     TOTAL SEGMENTS CHANGED:                  1
     TOTAL SEGMENTS INSERTED:                 1
     TOTAL SEGMENTS DELETED:                  1

     TOTAL DATA BASE UPDATES:                 3


     DATA BASE:                 CW.FISAMP.PORDRDD1
     DBD NAME:                  PORDR

     DBDLIB DATASET:            CW.FISAMP.DBDLIB1
                                CW.FISAMP.DBDLIB2
                                CW.FISAMP.DBDLIB3

     COBOL LAYOUT DATASET 1:    CW.FISAMP.COBOLLIB1
                                CW.FISAMP.COBOLLIB2
                                CW.FISAMP.COBOLLOB3

     SEG/LAYOUT XREF DATASET:   CW.FISAMP.XREF                                        MEMBER:  PORDR
                                CW.FISAMP.XREF2
                                CW.FISAMP.XREF3

     AUDIT TRAIL REPORT OPTIONS USED:


                 PRINT FORMAT:                            FORMATTED
                 MAXIMUM PRINT LINES PER PAGE:            60
                 SPACING BEFORE SEGMENT HEADERS:          2
                 PRINT ONLY CHANGED FIELDS ON AN UPDATE:  NO

     DATA BASE CLOSED ON 08/31/99 AT 13:05:48


                                                 **** E N D   O F   R E P O R T ****
```

Figure 7-7. Audit Trail Report - Hexadecimal Print Mode, Part 1

```
File-AID for IMS 7.1                File-AID for IMS/ISPF AUDIT TRAIL REPORT                                    PAGE    1
DATA BASE:  CW.FISAMP.PORDRDD1                                                                                  DATE 2003-01-07
DBD NAME:   PORDR                                                                                               TIME 15:58:41

 AUDIT TRAIL FILE: CW.IXPAT.D900831.T130054
 DATA BASE OPENED ON 08/31/99 AT 13:00:54                                                                        USERID:  XXXXX


 DATA BASE UPDATE NUMBER:         1            EDIT SUB OPTION:  UNFORMATTED                 SEGMENT UPDATED ON 08/31/99 AT 13:02:30
 SEGMENT NAME:  ORDR030     ORDER STATUS       LVL:   3

 CONCAT KEY:  AA2222,01,01

                                     1         2         3         4         5         6         7         8         9         10
 BEFORE/AFTER SEG POSITIONS  1234567890123456789012345678901234567890123456789012345678901234567890123456789012345678901234567890

    BEFORE         1    45   01QA.. ... .OKCUTTING        1988021419880306
                             FFDC00400040DDCEEECDC44444444FFFFFFFFFFFFFFFF
                             0181020C020C623433957000000001988021419880306
           CHANGE            **          --

    AFTER          1    45   01QA.. ... ...CUTTING        1988021419880306
                             FFDC0040004000CEEECDC44444444FFFFFFFFFFFFFFFF
                             0181020C020C113433957000000001988021419880306
           CHANGE            **          --


 DATA BASE UPDATE NUMBER:         2            EDIT SUB OPTION:  CHARACTER                   SEGMENT DELETED ON 08/31/99 AT 13:03:52
 SEGMENT NAME:  ORDR030     ORDER STATUS       LVL:   3

 CONCAT KEY:  AA4444,01,01

                                     1         2         3         4         5         6         7         8         9         10
 BEFORE/AFTER SEG POSITIONS  1234567890123456789012345678901234567890123456789012345678901234567890123456789012345678901234567890

    BEFORE         1    45   01QA.. ... .OKGRINDING       1988021419880306
                             FFDC00400040DDCDCDCCDC4444444FFFFFFFFFFFFFFFF
                             0181020C020C627995495700000001988021419880306
                             **


 DATA BASE UPDATE NUMBER:         3            EDIT SUB OPTION:  FORMATTED                  SEGMENT INSERTED ON 08/31/99 AT 13:05:35
 SEGMENT NAME:  ORDR040     ORDER SCRAP        LVL:   2

 CONCAT KEY:  AA8888,SSPA3428

                                     1         2         3         4         5         6         7         8         9         10
 BEFORE/AFTER SEG POSITIONS  1234567890123456789012345678901234567890123456789012345678901234567890123456789012345678901234567890

    AFTER          1    40   SSPA3428MA....OKGRINDING       N19891201
                             EEDCFFFFDC0080DDCDCDCCDC4444444DFFFFFFFF
                             2271342841000C627995495700000000519891201
                             ********
```

Figure 7-8. Audit Trail Report - Hexadecimal Print Mode, Part 2

```
File-AID for IMS 7.1            File-AID for IMS/ISPF AUDIT TRAIL REPORT                                PAGE    2
                                         SUMMARY INFORMATION                                            DATE 2003-01-07
                                                                                                        TIME 15:58:41


     AUDIT TRAIL FILE PRINTED:  CW.IXPAT.D900831.T130054
     AUDIT TRAIL DESCRIPTION:   SAMPLE OF File-AID for IMS/ISPF HEXADECIMAL AUDIT TRAIL REPORT


     TOTAL SEGMENTS CHANGED:                  1
     TOTAL SEGMENTS INSERTED:                 1
     TOTAL SEGMENTS DELETED:                  1

     TOTAL DATA BASE UPDATES:                 3


     DATA BASE:                 CW.FISAMP.PORDRDD1
     DBD NAME:                  PORDR

     DBDLIB DATASET:            CW.FISAMP.DBDLIB1
                                CW.FISAMP.DBDLIB2
                                CW.FISAMP.DBDLIB3

     COBOL LAYOUT DATASET 1:    CW.FISAMP.COBOLLIB1
                                CW.FISAMP.COBOLLIB2
                                CW.FISAMP.COBOLLIB3

     SEG/LAYOUT XREF DATASET:   CW.FISAMP.XREF                                        MEMBER:  PORDR
                                CW.FISAMP.XREF2
                                CW.FISAMP.XREF3

     AUDIT TRAIL REPORT OPTIONS USED:

                PRINT FORMAT:                            HEXADECIMAL
                MAXIMUM PRINT LINES PER PAGE:            60
                SPACING BEFORE SEGMENT HEADERS:          2
                PRINT ONLY CHANGED FIELDS ON AN UPDATE:  NO


     DATA BASE CLOSED ON 08/31/99 AT 13:05:48

                                             **** E N D   O F   R E P O R T ****
```

Chapter 8.
Selection Criteria

Option 6, Selection, is used to create, modify, and apply field and segment selection criteria to all segments in the primary IMS database. The purpose of selection criteria is to enable you to selectively process a subset of the segments in a database using a set of rules (or criteria) to create the subset.

The two kinds of selection criteria supported in File-AID for IMS/ISPF are existing and temporary. Each kind can be applied to all segments in the Extract function.

Existing selection criteria are created and maintained in the Selection Criteria function of File-AID for IMS, Option 6. Existing selection criteria are stored in a cataloged dataset for use in the functions where you can apply them. The Selection Criteria option consists of the following:

- Specifying the selection criteria dataset to edit.
- Editing the existing selection criteria.

Temporary selection criteria are created from within the Extract function where you apply the criteria. Temporary selection criteria are valid only for the duration of the function, they are not stored for future use. Therefore, you do not specify a selection criteria dataset but proceed directly into editing the temporary selection criteria. When you are finished editing the temporary selection criteria, the changes are applied and you proceed normally with the Extract function. Temporary selection criteria remain in effect only until the batch job is submitted. The criteria are deleted by the batch job.

Selection Criteria Specification

The Selection Criteria - Dataset Specification screen is the first screen displayed when you invoke Option 6. This screen is not displayed when you edit temporary selection criteria from within the Extract function.

Figure 8-1. Selection Criteria - Dataset Specification Screen

```
File-AID for IMS  ---  Selection Criteria - Dataset Specification  ------------
COMMAND ===>
ENV: DEV1 - DEVELOPMENT ENVIRONMENT WITH CONCATENATIONS

+ Selection criteria Dataset . . FISAMP.SELCRIT
                       Member . .          (Blank or pattern for member list)
--------------------------------------------------------------------------------
Enter DBD dataset name to which selection criteria will be applied:
          + DBDLIB Dataset 1 . . 'XXXXXXX.FISAMP.DBDLIB'
                   Dataset 2 . .
                       Member . . PORDR    (New criteria - Specify member or
                                                         blank for list
                                            Existing criteria - Member ignored)
--------------------------------------------------------------------------------
 Use application relatnships . . Y        (Y = Yes; N = No)
 + Appl relationship Dataset . . 'XXXXXXX.FISAMP.APPLREL'
--------------------------------------------------------------------------------
           Use COBOL layouts . .. Y        (Y - Required for formatted selection
                                            N - Segment/unformatted selection)
+ Segment/Layout XREF dataset  . 'XXXXXXX.FISAMP.XREFC'
                       Member . .          (Blank or pattern for member list)

    + COBOL  layout Dataset 1 . . 'XXXXXXX.FISAMP.COBOLLIB'
                    Dataset 2 . .
```

Note: The presence of a highlighted plus (+) or minus (-) sign indicates dataset concatenations. Refer to “Dataset Concatenation Support” on page 3-1 for additional information.

Selection criteria Dataset

Enter the selection criteria dataset you want to edit. The dataset must conform to the characteristics of a valid selection criteria dataset as described in “Selection Criteria Dataset Concatenation” on page 3-6.

Member

Enter the name of the member in the selection criteria dataset. If the field is left blank or a pattern is specified, a member list is displayed. Select a member from the list.

DBDLIB Dataset 1 and Dataset 2

Enter one or two DBD load library dataset names. If you enter one DBD load library name, you can enter it on either of the dataset name lines. If you enter two DBD load library names and their blocksizes are different, you must enter the library with the larger blocksize on the first dataset name line.

Member

Enter the DBD member that describes the database that you want to create selection criteria for. If two DBD libraries are entered, File-AID for IMS searches the first before the second to locate the DBD member.

When you create a new selection criteria dataset or member, it will contain the DBD member name you specify in this section of the screen. When you edit the selection criteria at a later time, the DBD Member field on the screen is ignored and the one contained in the selection criteria is used.

Use Application Relatnships

Indicate whether you want to define the selection criteria with an application relationship.

Appl Relationship Dataset

You must enter the application relationship dataset name when using an application relationship. Either the DBD member name specified on the screen for a new selection criteria file or the DBD name in an existing selection criteria file is used as the member name for the application relationship dataset.

Use Layouts

Indicate whether segment layouts are to be used to define the selection criteria. Refer to "Segment/Layout XREF Dataset Concatenation" on page 3-5 for a more detailed description.

If you intend to create or edit formatted field selection criteria, you must enter Y in this field.

If your installation has both the COBOL and PL/I language support options of File-AID for IMS installed, ensure that your current language mode is compatible with the segment layout and segment/layout XREF dataset information you specify. Your current language mode is indicated by the word COBOL or PL/I preceding the Use Layouts and the Layout Dataset fields. To change language mode, enter the COBOL or PLI primary command on the COMMAND line.

File-AID for IMS/ISPF maintains separate concatenations of COBOL and PL/I layouts and cross-reference datasets. These concatenations automatically toggle between the COBOL and PL/I sets when you enter the COBOL or PLI command. Layouts and cross-reference datasets that you have entered for use with COBOL are kept separate from those you have entered for PL/I

Segment/Layout XREF Dataset and Member

When you create a new selection criteria dataset or member that contains formatted field selection criteria, it is assigned a single record type status or multi-record type status based on the information contained in the segment/layout XREF member. The segment/layout XREF member, created and maintained using Option 7, is described in detail on page 3-5.

When you edit the selection criteria at a later time, the segment/layout XREF information must result in the same record type (single or multiple) as originally specified when the selection criteria were created. If the segment/layout XREF information you enter results in a type different from the original, the message RECORD TYPE CONFLICT is displayed, and you cannot edit the selection criteria.

When you create a new selection criteria dataset or member that does not contain formatted field selection criteria, it is not assigned a record type status. You can later edit the selection criteria regardless of the Use Layouts indicator you specify at the time.

If your installation has both COBOL and PL/I language support options of File-AID for IMS installed, when you create a new selection criteria dataset or member that contains formatted field selection criteria, it is assigned a language status of COBOL or PL/I based on your current language mode. When you edit the selection criteria at a later time, you must be in the same language mode that the selection criteria were originally created. If your language mode is different than the selection criteria's language status, the message SLCTN CRIT/LANG CONFLICT is displayed, and you cannot edit the selection criteria.

A language status is not assigned to selection criteria datasets that do not contain formatted field selection criteria. You can later edit the selection criteria regardless of your language mode at the time.

Layout Dataset 1 and Dataset 2

Enter the dataset names where the layouts specified by the segment/layout XREF reside.

If you enter one segment layout dataset name, you can enter it on either line. If you enter two segment layout dataset names, they can appear in any order. Each library can be any of the valid segment layout library organization types. Refer to “Segment Layout Dataset Concatenation” on page 3-4 for details.

Terminating the Screen

Do one of the following to terminate the Selection Criteria - Dataset Specification screen:

- Press ENTER to proceed to the next screen. Depending on the information entered, you can receive up to three member list screens:
  - One for the selection criteria dataset.
  - One for the DBD load library dataset.
  - One for the segment/layout XREF dataset.
- Enter the END, RETURN, or jump command to leave the selection criteria option.

Error Summary

If you are editing selection criteria that you previously created in Option 6, after you press ENTER on the Selection Criteria - Dataset Specification screen, File-AID for IMS reads the selection criteria dataset and matches it with the segment/layout XREF information. If errors are found in the matching process, the Selection Criteria Error Summary screen is displayed, as shown in Figure 8-2.

Figure 8-2. Selection Criteria Error Summary Screen

```
File-AID for IMS  --  Selection Criteria Error Summary  ---- APPL REL MISMATCH
COMMAND ===>

MISMATCH BETWEEN DBD AND SELECTION CRITERIA MEMBER
MISMATCH BETWEEN APPLICATION RELATIONSHIPS AND SELECTION CRITERIA MEMBER



Datasets used when last save was made:
            DBDLIB dataset 1: 'CW.FISAMP.DBDLIB1'
                   Dataset 2: 'CW.FISAMP.DBDLIB2'
                      Member: PORDR

   Appl relationship dataset: 'CW.FISAMP.APPLREL'
 Segment/Layout XREF dataset: 'CW.FISAMP.XREF'
                      Member:

      COBOL layout dataset 1: 'CW.FISAMP.COBOLIB1'
                   Dataset 2: 'CW.FISAMP.COBOLIB2'

Press ENTER to ignore mismatches and continue editing this member
Enter END to return to the previous panel without saving this member
```

Error Messages

Errors can occur in the matching process for any of the following reasons:

- Incorrect segment layout or segment/layout XREF information was entered on the Selection Criteria - Dataset Specification screen.
- The segment layouts used to create the formatted field selection criteria has changed.
- The segment/layout XREF used to create the formatted field selection criteria has changed.

- The application relationships applied to the selection criteria have changed.
- The selection criteria have been modified outside Option 6 (for example, in ISPF/PDF Option 2).

Following is the text and description of each message:

Table 8-1. Selection Criteria - Validation Errors

MISMATCH BETWEEN DBD AND SELECTION CRITERIA MEMBER This error can occur if the DBD definitions were changed since the file was last saved. File-AID for IMS deletes the DBDs no longer defined when you edit and save the selection criteria. Following are the most likely causes: • Logical DBDs were added and/or deleted in the DBD since the selection criteria were last edited. • The selection criteria were modified outside Option 6.
MISMATCH BETWEEN APPLICATION RELATIONSHIPS AND SELECTION CRITERIA MEMBER This error can occur when the selection criteria contain target DBDs that are no longer defined in the application relationship or the DBD definition has changed. File-AID for IMS deletes the DBDs no longer defined when you edit and save the selection criteria. Following are the most likely causes: • Target DBDs were added and/or deleted in the application relationship since the selection criteria were last edited. • Logical DBDs were added and/or deleted in the DBD since the selection criteria were last edited. • Application relationships were not applied when the selection criteria were previously defined with application relationships. • The selection criteria were modified outside Option 6.
MISMATCH BETWEEN SEG/LAYOUT XREF AND SELECTION CRITERIA MEMBER This error can occur for both single and multi-record type formatted field selection criteria. For a single record type, the error occurs when File-AID for IMS attempts to look up the segment/layout XREF and retrieve the segment layout. For multi-record type, the error occurs when File-AID for IMS attempts to look up the record type values in the segment/layout XREF and retrieve the segment layout. Following are the most likely causes: • The wrong segment/layout XREF dataset was specified. • The correct segment/layout XREF was specified, but it has changed since the selection criteria were last edited. • The selection criteria were modified outside Option 6.
MISMATCH BETWEEN COBOL/PL/I LAYOUT AND SELECTION CRITERIA MEMBER This error can occur when a segment layout changes. For example, the starting position in the layout was changed or the data type was changed for fields where formatted selection criteria were entered. File-AID for IMS discards the selection criteria for the mismatched field. Following are the most likely causes: • The COBOL or PL/I layout has changed since the selection criteria were last saved. • The selection criteria have been modified outside Option 6.
INVALID OR MISSING RECORD-SKIPPED TO NEXT VALID CRITERIA This error occurs when File-AID for IMS encounters an invalid record or determines that a record is missing from the selection criteria dataset. File-AID for IMS attempts to skip to the next valid set of field selection criteria. This error can occur when the selection criteria were modified outside Option 6.

Datasets Used When Last Save Was Made

Displays information about the DBDLIB, application relationship, segment layout XREF, and layout datasets that were used the last time the file was saved.

Terminating the Screen

Do one of the following to terminate the Selection Criteria Error Summary screen:

- Enter the END command to terminate the editing of the selection criteria and return to the Selection Criteria - Dataset Specification screen.
- Press ENTER to proceed with editing the selection criteria despite the errors. The Selection Criteria - Menu screen is displayed.

Selection Criteria Menu

If there are no errors in the selection criteria or if there are errors and you press ENTER on the Selection Criteria Error Summary screen, the Selection Criteria - Menu screen is displayed as shown in Figure 8-3. This is the first screen displayed when you create temporary selection criteria from within the Extract function.

Figure 8-3. Selection Criteria - Menu Screen

```
File-AID for IMS  ----------  Selection Criteria - Menu  ----------------------
OPTION  ===>

                                                   Data base access:

Select option by entering the option number or by entering the option name

   1  Specify SEGMENT criteria
   2  Specify FIELD criteria
   3  Specify data base RELATIONSHIP criteria

-------------------------------------------------------------------------------

Enter Selection Criteria Member Description:

SHORT DESCR ===>                                   (Used on member list)
 Extended   ===>
Description ===>

Specify prompting level desired ===> N         (N = New user; E = Experienced)

The commands SEG, FLD, and REL can be used from any Selection Criteria panel
to invoke Options 1, 2, or 3 respectively
```

Data Base Access

Indicates whether primary database root segments are accessed directly or sequentially during the extract process. Refer to “Direct Access Processing” on page 8-26 for more information on database access.

Select Option

Enter one of the following options or commands:

1 or SEG The Segment Criteria - Segment List screen (page 8-8) is displayed.

2 or FLD The Field Criteria Set List screen (page 8-14) is displayed.

3 or REL The Relationship Specification screen (page 8-29) is displayed.

Short Descr

Enter a short 30-byte description for the selection criteria member. This description is displayed on the Member List screen for the selection criteria dataset. This field is valid only for existing selection criteria and is not displayed when editing temporary selection criteria.

Extended Description

Enter two lines (62 bytes each) of extended description for both temporary and existing selection criteria.

Specify Prompting Level Desired

Specify whether you are a new or experienced user of File-AID for IMS. If you specify N, the informational screens associated with the Segment Criteria and Field Criteria options are displayed. Specify E to skip the informational screens. Examples of the informational screens can be found in "Segment Criteria" on page 8-7 and "Field Criteria" on page 8-12.

Common Primary Commands

Following is a list of selection criteria primary commands. Commands that are specific to Segment, Field, or Relationship criteria are described under those sections. Scroll commands (UP, DOWN, LOCATE) apply only to scrollable lists and are described in "Scrolling" on page 1-13. Refer to Chapter 11, "Primary Commands" for an explanation of these and other File-AID for IMS/ISPF primary commands.

CANCEL	Terminates the edit session without performing a save.
END	Terminates the current operation and returns control to the next higher-level screen without performing a save.
FIELD	Accesses the Field Criteria Set List screen from any screen within the selection criteria option.
RELATIONSHIP	Accesses the Relationship Specification screen from any screen within the selection criteria option.
RETURN	Returns to the Primary Option Menu or the option specified. A save is issued if changes were made to the file.
SAVE	Updates the selection criteria file to reflect changes made. For sequential datasets, the entire dataset is rewritten.
SEGMENT	Accesses the Segment Criteria - Segment List screen from any screen within the selection criteria option.

Segment Criteria

Segment selection criteria are used to control selection of database segments based on occurrence counts and limits rather than field values. Segment criteria are applied to all criteria sets.

If a segment occurrence passes segment selection criteria, field criteria are applied if any exist (refer to "Field Criteria" on page 8-12). If a segment occurrence passes all selection criteria, then the relationship criteria that control selection of related database records are applied.

The informational screen shown in Figure 8-4 on page 8-8 is displayed if you specify new user and select Option 1, Segment, on the Selection Criteria - Menu screen.

Figure 8-4. SelectionCriteria - Segment List Information Screen

```
File-AID for IMS  -----  Segment Criteria - Segment List Information  ---------
COMMAND ===>


   SEGMENT CRITERIA allow you to control the selection of data base
   segments based on occurrence counts and limits, rather than field
   values.

   If a segment occurrence passes segment criteria, then field criteria
   are applied, followed by relationship criteria, if any exist.





  Press ENTER to continue to the next screen
```

Segment Criteria Segment List

The Segment Criteria - Segment List screen is displayed as shown in Figure 8-5 when you select Option 1 on the Selection Criteria - Menu screen or enter the SEGMENT command on any screen within Option 6. The Segment Criteria - Segment List screen is a scrollable list of your whole DBD structure. This screen is used to select a segment where segment criteria are to be applied.

Figure 8-5. Segment Criteria - Segment List Screen

```
File-AID for IMS  --------  Segment Criteria - Segment List    ROW 1 TO 5 OF 5
COMMAND ===>                                                   SCROLL ===> CSR

Maximum data base segments to extract ===> 0           (0 = No limit)

Enter S to select a segment

        Line  Extract
        Cmd   Segment  -----Level-----  Segment-  --Description--
         _       Y     1 DBD-PORDR      ORDR010   ORDER ROOT
         _       Y      2               ORDR020   ORDER LINE
         _       Y       3              ORDR030   ORDER STATUS
         _       Y      2               ORDR040   ORDER SCRAP
         _       Y      2               ORDR050   ORDR-CUST LCHLD
                   ***  END OF SEGMENT LIST  ***
```

Maximum Data Base Segments to Extract

Enter the maximum number of database segments to be selected before terminating the selection process. After the specified limit is reached, all remaining segments in the database are not selected regardless of the field selection criteria specified. If this limit is reached while extracting logically related segments, application related segments, or subordinate segments for the root, the extract process continues until

all the necessary segments are extracted. If you do not want to set a limit on the number of database segments to select, enter 0 in this field.

Line Cmd

Enter the S line command to select a database segment for processing. Only one database segment at a time can be selected for processing.

Extract Segment

Enter Y if you want to extract a segment. Only the segments that you select are extracted in the selection process. There can be a conflict if you specify a value different than the value specified on the Field Criteria - Segment List screen. Refer to page 8-9 for more information on specifying Extract Segment values in field and segment criteria.

Level

Displays the hierarchical level number of the segment in the database. For the root segment, the primary DBD name is displayed next to the level number.

Segment

Displays the segment name as specified in the DBD.

Description

Displays a 15-character segment description. This description is stored in the segment/layout cross-reference created in Option 7.

Terminating the Screen

Do one of the following to terminate the Selection Criteria - Segment List screen:

- Enter an S line command and press ENTER to proceed to the Segment Criteria screen.
- Enter the FIELD or REL command to access the corresponding Field Criteria Set List (page 8-13) or Relationship Specification (page 8-29) screen.
- Enter the END command to terminate the selection process and return to the Selection Criteria - Menu screen.
- Enter the CANCEL command to terminate the selection process and return to the Selection Criteria - Dataset Specification screen.
- Enter the RETURN command to return to the Primary Option Menu.

Segment Criteria Screen

The Segment Criteria screen is displayed when you select a database segment on the Segment Criteria - Segment List screen and press ENTER. This screen is used to create segment criteria for any segment in the primary database. The segment criteria data apply to all criteria sets.

Figure 8-6. Segment Criteria Screen

```
File-AID for IMS  -----------  Segment Criteria  -----------------------------
COMMAND ===>

         Segment name: ORDR010
Current segment level: 1
      Extract segment: Y


Starting occurrence number within parent ===> 1          (Must be > 0)
            Selection interval:
                    Select within parent ===> 1          (Must be > 0)
                    Skip within parent   ===> 0

          Maximum segments within parent ===> 0          (0 = No limit)
Maximum segments within data base record ===> 0          (0 = No limit)
 Max segments to select within data base ===> 0          (0 = No limit)
```

Starting Occurrence Number within Parent

Enter the database segment occurrence where you want the selection process to begin. All segments prior to the starting database segment occurrence number are not selected, regardless of field selection criteria specified.

Selection Interval: Select within Parent

Enter the number of database segments you want selected at each selection interval. You must specify a value greater than 0 for this field. The Selection Interval: Select and Skip fields determine the segment selection pattern for the database.

Selection Interval: Skip within Parent

Enter the number of database segments you want to skip between selection intervals. All database segments skipped are not selected regardless of field selection criteria specified.

Note: The values specified in the Starting Occurrence Number within Parent and Selection Interval fields can cause File-AID for IMS to not select segment criteria that pass field selection criteria when direct access processing is performed (refer to "Direct Access Processing" on page 8-26 for more information).

Maximum Segments within Parent

Enter the maximum number of segments to be processed within a parent. If you do not want to set a limit on the number of segments to select within a parent, enter 0 in this field.

Maximum Segments within Data Base Record

Enter the maximum number of segments to be processed within the current root segment before terminating the selection process. After this limit is reached, all remaining segments are not selected regardless of the field criteria specified. If you do not want to set a limit on the number of segments to select, enter 0 in this field.

Max Segments to Select within Data Base

Enter the maximum number of segments of the specified segment type to select during the selection process. This field enables you to set an absolute limit on the number of occurrences of the specified segment type that are processed. After this limit is reached, all remaining segments of the specified segment type in the database

are not selected regardless of the field criteria specified. If you do not want to set a limit on the number of database segments of the specified segment type to select, enter 0 in this field.

Terminating the Screen

Do one of the following to terminate the Segment Criteria Screen:

- Enter the FIELD or REL command to access the corresponding Field Criteria Set List (page 8-13) or Relationship Specification screen (Figure 8-18 on page 8-29).
- Enter the END command to terminate editing of the selection criteria and return to the Segment Criteria - Segment List screen.
- Enter the RETURN command to terminate editing and return to the Primary Option Menu. If you are editing existing selection criteria in Option 6, the member is saved before the command is executed.
- Enter the CANCEL command to terminate editing of the selection criteria. If you are editing existing selection criteria in Option 6, the selection criteria member is not saved and you are returned to the Selection Criteria - Dataset Specification screen. If you are editing temporary selection criteria within the Extract function, CANCEL returns you to the previous screen in that function, and the criteria are not applied.

Following is an example of segment selection criteria:

```
+-------------------------------------------------------------------------------+
|                          SEGMENT NAME: ORDR010                                |
|                 CURRENT SEGMENT LEVEL: 1                                      |
|                       EXTRACT SEGMENT: Y                                      |
|                                                                               |
| STARTING OCCURRENCE NUMBER WITHIN PARENT  -> 3 (Must be > 0)                  |
|               SELECTION INTERVAL:                                             |
|                       SELECT WITHIN PARENT -> 2 (Must be > 0)                 |
|                       SKIP WITHIN PARENT   -> 1                               |
|                                                                               |
|            MAXIMUM SEGMENTS WITHIN PARENT   -> 0 (0 = No limit)               |
|  MAXIMUM SEGMENTS WITHIN DATA BASE RECORD   -> 0 (0 = No limit)               |
|   MAX SEGMENTS TO SELECT WITHIN DATA BASE   -> 5 (0 = No limit)               |
|                                                                               |
| Selected/Not Selected   Segments in the Primary Data Base                     |
|                                                                               |
| NS                      Root Segment      R                                   |
| NS                      Child Segment     C                                   |
| NS                                        C                                   |
| NS                                        R                                   |
| S                     Select 2          R  <-Starting Occurrence Number     |
| S                                         R                                   |
| S                                         C                                   |
| NS                      Skip 1            R                                   |
| NS                                        C                                   |
| NS                                        C                                   |
| S                       Select 2          R                                   |
| S                                         C                                   |
| S                                         R                                   |
| S                                         C                                   |
| S                                         C                                   |
| NS                      Skip 1            R                                   |
| NS                                        C                                   |
| NS                                        C                                   |
| S                     Select 2          R  <-5th Root Segment Selected      |
| S                                       C  <-10th Data Base Segment           |
|                                              Selected*                        |
| S                                         C                                   |
| S                                         C                                   |
| S                                         C                                   |
| NS              Not selected because      R                                   |
| NS              limit has been reached    C                                   |
| NS                                        C                                   |
| NS                                        R                                   |
| NS                                        R                                   |
+-------------------------------------------------------------------------------+
```

* Based on a value of 10 set in the Maximum Data Base Segments to Extract field on the Segment Criteria - Segment List screen.

In this example, no logically related database segments are selected.

If you enter the following values in the segment selection criteria fields for all segments on the Segment Criteria - Segment List screen, all segments in the primary database pass segment selection criteria and proceed to field criteria.

```
STARTING OCCURRENCE NUMBER WITHIN PARENT  -> 1 (Must be > 0)
               SELECTION INTERVAL:
                    SELECT WITHIN PARENT  -> 1 (Must be > 0)
                    SKIP WITHIN PARENT    -> 0

           MAXIMUM SEGMENTS WITHIN PARENT -> 0 (0 = No limit)
 MAXIMUM SEGMENTS WITHIN DATA BASE RECORD -> 0 (0 = No limit)
  MAX SEGMENTS TO SELECT WITHIN DATA BASE -> 0 (0 = No limit)
```

Field Criteria

The Field Criteria - Set List Information screen is displayed when you specify New User and select Option 2, Field Criteria, on the Selection Criteria - Menu screen.

Figure 8-7. Field Criteria - Set List Information Screen

```
File-AID for IMS  ------  Field Criteria - Set List Information  --------------
COMMAND ===>



   You can create field criteria for any segment in the primary data base.
   Field criteria are grouped into "criteria sets".  A selection criteria
   member or dataset can contain one or more criteria sets.  A field
   criterion is associated with a particular segment type.

   Each field criterion of the same segment type in a criteria set is ORed
   together.  Field criteria belonging to different segment types in a
   criteria set are ANDed together.  Criteria sets in a selection criteria
   member or dataset are ORed together.

   You create, edit and delete criteria sets on the FIELD CRITERIA SET LIST
   screen, which immediately follows this screen.  You create and edit field
   criteria starting on the FIELD CRITERIA - SEGMENT LIST screen.


  Press ENTER to continue to the next screen
```

The database illustrated in Figure 8-8 on page 8-13 has six segment types. An asterisk in the box indicates a field criteria record.

In criteria set 1, field criteria exist for all segments except PAYMENT and HOUSEHOLD. Three field criteria records exist for the ILLNESS segment.

In criteria set 2, there is one field criteria record for the BILLING segment and another for the PAYMENT segment.

Figure 8-8. Criteria Sets and Criteria Records

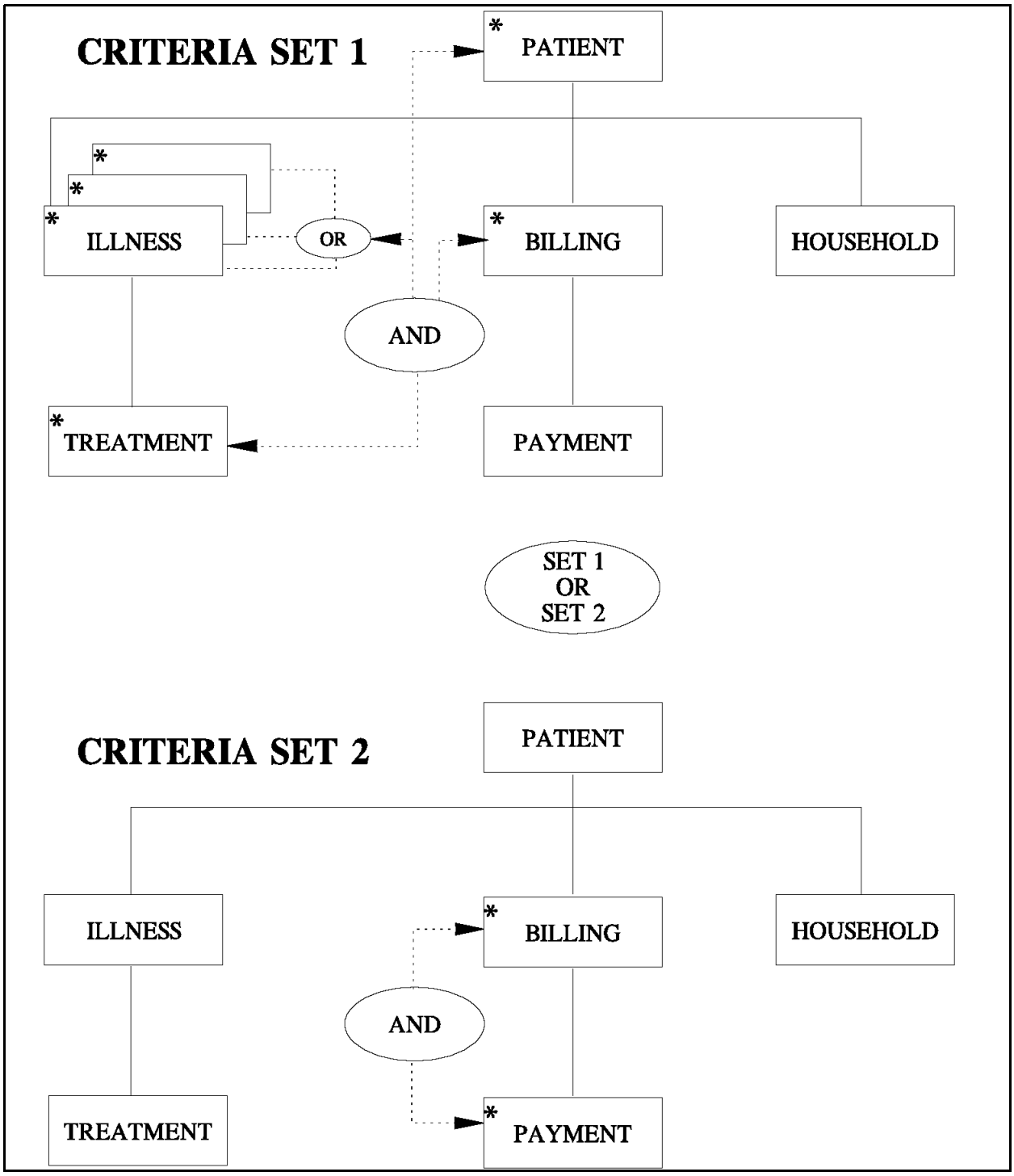

Field Criteria Set List

The Field Criteria Set List screen is displayed when you select Option 2 or enter the FIELD command on the Selection Criteria - Menu screen.

Figure 8-9. Field Criteria Set List Screen

```
File-AID for IMS  ---------  Field Criteria Set List  -------  ROW 1 TO 2 OF 2
COMMAND ===>                                                   SCROLL ===> CSR

Data base: PORDR

To create Field Criteria, select a line and enter the optional description
Enter S, I, D, or R to select, insert, delete or repeat a criteria set

  Line Criteria                                                  Data base
  Cmd    Set     -------------Criteria Set Description-------------  Access
  __      1      FIND ALL COMPLETED ORDERS - FORMATTED
  __      2      FIND ALL OUTSTANDING ORDERS - UNFORMATTED
                        ***  END OF CRITERIA SET LIST  ***
```

Line Cmd

Enter one of the following:

D Deletes a criteria set

I Inserts a line to create a new criteria set

R Repeats a criteria set

S Selects a criteria set for editing.

A repetition factor of 1—9 is allowed for the D, I, and R line commands.

Criteria Set

Displays the number that File-AID for IMS/ISPF assigned to each selection criteria set that you created. This criteria set number is used for identification purposes only during the selection criteria process and acts like a line number during an ISPF edit session. As criteria sets are added and/or deleted, the criteria set numbers are reassigned in ascending order.

Criteria Set Description

Enter a 50-byte description for each criteria set.

Data Base Access

Displays whether database access to the root segments is direct or sequential. Refer to "Direct Access Processing" on page 8-26 for more information.

Terminating the Screen

Do one of the following to terminate the Field Criteria Set List screen:

- Select a set and press ENTER to proceed to the Field Criteria - Segment List screen (Figure 8-10 on page 8-15).
- Enter the END command to return to the Selection Criteria - Menu screen.
- Enter the RETURN command to return to the Primary Option Menu.

Field Criteria Segment List

The Field Criteria - Segment List screen is displayed when you select a criteria set and press ENTER on the Field Criteria Set List screen. The Field Criteria - Segment List screen is a scrollable list that functions like any other segment list screen.

This screen enables you to select and/or extract segments for field criteria. For each segment type within a set, you can create a maximum of 500 field selection criteria. However, there is no limit to the number of sets you can create.

Figure 8-10. Field Criteria - Segment List Screen

```
File-AID for IMS  ----------  Field Criteria - Segment List    ROW 1 TO 5 OF 5
COMMAND ===>                                                   SCROLL ===> CSR
Criteria set: 1                                Set data base access:

Enter an S line command to select a segment for field criteria
In EXTRACT SEGMENT, enter Y to extract segments that pass criteria, or
     N to not extract segments even if they pass criteria, or
     T to extract the twins of the segment passing criteria
Enter A in EXTRACT CHILDREN to extract all children of passing segments
Field criteria on the same seg type are ORed; on different seg types are ANDed

Max data base records to extract for this set ===> 0           (0 = No limit)
Line Extract Extract                                            FMT  UNFMT
Cmd  Segment Children -----Level-----  Segment-  --Description--  -Criteria-
 _      Y       _     1 DBD-PORDR      ORDR010   ORDER ROOT       0     0
 _      Y       _      2               ORDR020   ORDER LINE       0     0
 _      Y       _       3              ORDR030   ORDER STATUS     0     0
 _      Y       _      2               ORDR040   ORDER SCRAP      0     0
 _      Y       _      2               ORDR050   ORDR-CUST LCHLD  0     0
                         ***  END OF SEGMENT LIST  ***
```

Set Data Base Access

Displays whether database access to the root segments is direct or sequential. Refer to "Direct Access Processing" on page 8-26 for more information.

Max Data Base Records to Extract for This Set

Enter a number to limit the number of database records selected for extraction in this criteria set. When the specified limit is reached, the criteria set is disabled for the remainder of the extract process.

Line Cmd

Enter S to select the segment type that you want to create or edit selection criteria for.

Extract Segment

Indicate which segments you want extracted after selection criteria are applied.

Y Extracts the segment occurrence if it passes selection criteria. This value is the default.

N Does not extract this segment, even if it passes selection criteria.

T Extracts segment occurrence if it passes selection criteria; includes all twins.

The Extract Segment field on the Segment Criteria - Segment List screen applies to all criteria sets. However, the Extract Segment field on this screen applies only to

segment occurrences passing this criteria set. If a conflict exists between the two fields, an asterisk is displayed next to the field criteria Extract Segment value.

When you specify segment and field criteria, the value you specify in the Extract Segment field is important. A conflict can occur between the Extract Segment value on the Segment Criteria - Segment List screen and the Field Criteria - Segment List screen. Use the following matrix to identify valid combinations:

Field Criteria	Segment Criteria	Result
Y or T	Y	Valid
Y or T	N	Invalid
N	Y	Valid
N	N	Valid

If you specify Y or T as the Extract Segment value in Field Criteria and then specify N in Segment Criteria, a message informing you of the conflict is displayed, however, no error occurs. The Segment Criteria's indicator takes precedence over any set's Field Criteria indicator.

Extract Children

Enter A if you want to extract all children of the current segment. The Extract Segment values for all dependent segments that are N are set to Y.

Note: The Extract Segment and Extract Children fields allow flexible extracts. It is important to note that selection criteria are not applied to the additional segment occurrences that may be extracted due to the values specified in the Extract Segment and Extract Children fields.

Level

Displays the hierarchical level number of the segment in the database. For the root segment, the primary DBD name is displayed next to the level number.

Segment

Displays the segment name as specified in the DBD.

Description

Displays a 15-character segment description.

FMT and UNFMT Criteria

Displays the number of existing formatted and/or unformatted field criteria for each segment. These fields are protected.

Terminating the Screen

Do one of the following to terminate the Field Criteria - Segment List screen:

- Press ENTER to proceed to the Field Criteria List screen.
- Enter the END command to return to the Field Criteria Set List screen.
- Enter the RETURN command to return to the Primary Option Menu.

Field Criteria List

The Field Criteria List screen is displayed when you select a segment on the Field Criteria - Segment List screen and press ENTER. This screen is a scrollable list of existing field criteria that displays a line for each existing field criteria defined for the selected segment type in the criteria set.

Figure 8-11. Field Criteria List Screen

```
File-AID for IMS  -----------  Field Criteria List  ---------  ROW 1 TO 3 OF 3
COMMAND ===>                                                   SCROLL ===> CSR

Criteria set: 1
Segment name: ORDR010

To create Field Criteria, select a line and enter the FORMATTED indicator (Y/N)
  and the optional description
Enter S, I, D, or R to select, insert, delete, or repeat Field Criteria
The relationship between each field criterion is ORed

   Line  Criteria                                              Data base
   Cmd    Number  Formatted    ----Condition Description-----   Access
   __       1         _        TYPE 1 CABLE
   __       2         _        TYPE 2 CABLE
   __       3         _        TYPE 3 CABLE
                     ***  END OF FIELD CRITERIA LIST  ***
```

Line Cmd

Enter one of the following:

D Deletes a field criteria

I Inserts a field criteria

R Repeats a field criteria

S Selects a field criteria for editing.

A repetition factor of 1—9 is allowed for the D, I, and R line commands.

Criteria Number

Displays the number that File-AID for IMS/ISPF assigned to each field criteria. This number is used only for identification purposes during the selection criteria process and acts like a line number during an ISPF edit session. As field criteria are added and/or deleted, the numbers are reassigned in ascending order. The field criteria number does not affect the selection process in any way.

Formatted

When you insert a field criteria, you must specify the criteria type in this field. You cannot change the Formatted value for an existing field criteria. Enter the criteria record type.

Y Formatted field criteria

N Unformatted field criteria

Condition Description

Displays a 30-byte field criteria description.

Data Base Access

Displays whether database access to the root segments is direct or sequential. Refer to "Direct Access Processing" on page 8-26 for more information.

Terminating the Screen

Do one of the following to terminate the Field Criteria List screen:

- Press ENTER to proceed. Depending on the segment type and whether formatted or unformatted was specified, one of the following screens is displayed:
  - If you are creating new field criteria for a segment that requires more than one layout and specified Y in the Formatted field, the Select Multiple Record Type Value screen (Figure 8-12) is displayed.
  - If you are creating new field criteria with a single segment layout and specified Y in the Formatted field, the Formatted Field Criteria screen (Figure 8-14 on page 8-21) is displayed.
  - If you are editing existing field criteria and the Formatted field value is Y, the Formatted Field Criteria screen (Figure 8-14 on page 8-21) is displayed.
  - If you are creating/editing new/existing field criteria and specified N in the Formatted field, the Unformatted Field Criteria screen (Figure 8-15 on page 8-24) is displayed.
- Enter the END command to return to the Field Criteria - Segment List screen.
- Enter the RETURN command to return to the Primary Option Menu.

Select Record Type Value

The Select Record Type Value screen is displayed when a newly created formatted field criterion is selected on the Field Criteria List screen and the current segment is defined as a multiple record type segment.

The Select Record Type Value screen is used when the segment you selected has multiple formats that require more than one segment layout to define them. For this type of segment, there are up to two fields within the segment that contain values indicating the segment format. In File-AID for IMS/ISPF, these values are called record type values. One or two record type values can be used to identify a field criterion.

Figure 8-12. Select Record Type Value Screen

```
File-AID for IMS  ---------  Select Record Type Value  ------  ROW 1 TO 6 OF 6
COMMAND ===>                                                   SCROLL ===> CSR

   Data base: PORDR
Segment name: ORDR020

Enter S to select segment record type

Line
Cmd --Record Type 1-- --Record Type 2-- --Member-- -----Starting Data-Name-----
 _  PO                                  ORDR020
 _  SC                                  ORDR021
 _  WO                IN                ORDR022    INTERNAL-WORK-ORDER
 _                    OV                ORDR022    OUTSIDE-VENDOR-WORK-ORDER
 _                    *OTHER*
 _  *OTHER*
                      ***  END OF RECORD TYPE LIST  ***
```

Line Cmd

Enter the S line command to select the segment record type.

Record Type 1

Displays the following types of entries:

- The specific values that can appear in the Record Type 1 field.
- The literal *OTHER* if multiple record type 1 values are associated with one segment layout or have the same Record Type 2 field. The literal *OTHER* may appear as the last record type 1 value without a segment layout member. This entry is for your convenience only and can be ignored if not needed.

Record Type 2

Displays the following types of entries:

- The specific values that can appear in the Record Type 2 field.
- The literal *OTHER* if multiple record type 2 values are associated with one segment layout. Refer to the Record Type 1 section described above for more information.

Member

Displays the source library member where the segment layout corresponding to the record type 1 and 2 combination is stored.

Starting Data-Name

Displays the starting data-name of the segment layout.

Terminating the Screen

Do one of the following to terminate the Select Record Type Value screen:

- Enter an S line command and press ENTER to proceed. Depending on what you selected on this screen, one of the following screens is displayed:
  - If you selected a record type value, the Formatted Field Criteria screen (Figure 8-14 on page 8-21) is displayed.
  - If you selected *OTHER*, the Other Record Type Value Specification screen (Figure 8-13 on page 8-20) is displayed.
- Enter the END command to return to the Field Criteria List screen.

Other Record Type Value Specification Screen

The Other Record Type Value Specification screen is displayed when you select the literal *OTHER* on the Select Record Type Value screen.

Figure 8-13. Other Record Type Value Specification Screen

```
File-AID for IMS  ------  Other Record Type Value Specification  --------------
COMMAND ===>

         Data base: PORDR
      Segment name: ORDR020

      COBOL member: ORDR022
Starting data-name:


Specify record type value(s):

   Record type 1 ===> W0               Length: 2
               2 ===>                  Length: 2
```

Starting Data-Name

Displays the starting data-name.

Record Type 1 and Record Type 2

Enter record type values 1 and 2 for the *OTHER* values. If values are already defined, this field is protected.

Terminating the screen

Do one of the following to terminate the Other Record Type Value Specification screen:

- Press ENTER. If you changed the fields or used any primary commands on this screen, the screen is refreshed to give you a chance to verify your changes. If no changes were made, the Formatted Field Criteria screen (Figure 8-14 on page 8-21) is displayed.
- Enter the END command to return to the Select Multiple Record Type Value screen.

Multiple Record Type Value Primary Commands

In addition to the common selection criteria commands (refer to page 8-7), the following primary commands can be used on the Select Multiple Record Type Value and the Other Record Type Value Specification screens:

CAPS Controls whether alphabetic data entered is automatically translated to upper case or left as-is.

HEX Displays data in either hexadecimal or character format. The first line is in character format. The next two lines are in HEX format.

DBCS Changes display format to DBCS.

EBCDIC Changes display format to EBCDIC.

MIXED Changes display format to mixed DBCS and EBCDIC.

Chapter 11, “Primary Commands” provides the syntax for each of these commands.

Formatted Criteria Screen

The Formatted Criteria screen is displayed when you do one of the following:

- Select a formatted field criteria entry for a segment with a single segment layout on the Field Criteria List screen.
- Select an entry on the Select Multiple Record Type Segment screen.

The Formatted Selection Criteria screen is used to control the selection of database segments based on field values specified using a segment layout. Each field criterion within a selection criteria is ANDed together. However, each field criterion is ORed together. Field selection criteria are then applied to segments that pass the segment selection criteria you specify.

Figure 8-14. Formatted Criteria Screen

```
File-AID for IMS  -----------  Formatted Criteria  ----------------- LINE 00001
COMMAND ===>                                                 SCROLL ===> CSR
Seg  ORDR010  ORDER ROOT                            Data base access: SEQUENTIAL
Criteria no. 1
-------Level number/Data-name------- -Format- RO ---------Field Value----------
01  ORDER-ROOT-DATA
  05  ORDER-ROOT-KEY
    07  ORDER-NUMBER-PREFIX          C   2  K >  AA
    07  ORDER-NUMBER                 Z   4  K
  05  ORDER-DESCRIPTION              C  40
      (POS 31-40)
  05  CUSTOMER-NUMBER                C   6    =  CN0001
  05  PLANNED-ORDER-QUANTITY         PS  5
  05  PLANNED-ORDER-AMOUNT           P   5  2
  05  ORDER-TYPE                     C   2
  05  ACTUAL-ORDER-QUANTITY          PS  5
  05  TOTAL-SCRAP-QUANTITY           PS  5
  05  TOTAL-SCRAP-REDEFINES          RDEFINES    TOTAL-SCRAP-QUANTITY
                                     C   3
  05  ORDER-STATUS                   Z   2
  05  FILLER                         C   1

Enter END command to return to field criteria list
```

Data Base Access

Indicates whether primary database root segments are accessed directly or sequentially during the extract process. Refer to “Direct Access Processing” on page 8-26 for more information.

Level Number/Data-Name

Displays the level number and data-name of each item in the segment layout.

RO

Enter the relational operator and field value next to each field that you want to base the selection on. Leave the relational operator and the field value blank for fields not involved in the selection criterion. The RO field is protected for non-elementary items.

Multiple fields on a single criterion are logically ANDed together. Multiple sets of criteria are logically ORed together.

Fields that contain the record type are protected in the segment layout, and the intensified message "RECORD TYPE FIELD" is displayed in the Field Value field. The record type fields are treated as if you entered the EQ relational operator and the corresponding record type values. Following are the valid relational operators:

= or EQ Equal to

¬ = or NE	Not equal to
> or GT	Greater than
< or LT	Less than
> = or GE	Greater than or equal to
< = or LE	Less than or equal to
BT	Within a range of two values (endpoints inclusive)
NB	Outside a range of two values (endpoints exclusive)
CO	Search within a field for a character string
NC	Search within a field for absence of a character string

The BT relational operator includes the endpoints of the range you specify. The NB relational operator does not include the endpoints. The BT and NB relational operators are not valid for Double-Byte Character Set (DBCS) support.

The CO and NC relational operators can be specified only for alphanumeric fields (PIC X for COBOL, CHAR or PIC for PL/I).

PL/I

EQ and NE are the only valid relational operators for bit items.

Extract based on key values

EQ is the only valid relational operator for key values.

Field Value

For fields with relational operators other than BT and NB, you specify the field value to be used in the comparison exactly as in Edit Formatted. You can enter the words HIGH-VALUES and LOW-VALUES for alphanumeric fields to represent a value of HEX FFs or HEX 00s, respectively. If you want to compare an alphanumeric field to blanks (HEX 40s) simply leave the Field Value field blank.

COBOL For Index fields, you must enter the field value as a four-byte hexadecimal string (for example, X'41414141').

PL/I For Pointer and Fullword Floating Binary fields, you must enter the field value as a four-byte hexadecimal string (for example, X'41414141'). For Doubleword Floating Binary fields, you must enter an eight-byte hexadecimal string (for example, X'4141414141414141').

Formatted field criteria values can only be specified for bit items that are eight bits or less in length. The field value can contain only zeros and/or ones. The field value you specify is treated as a mask that is ANDed with the bit item when the field criteria are applied. For example, where EQ 00100010 is specified for a BIT(8) field any segment that contains a 1 bit in positions 2 and/or 6 (where the leftmost bit is position 0 and the rightmost bit is position 7) is selected. The bit values in the other positions are ignored.

Conversely, where NE 00100010 is specified any segment that contains a 0 bit in both positions 2 and 6 is selected, regardless of the values in the other positions.

You can select segments with an invalid field value by entering the word INVALID with the EQ relational operator. You can select segments with a valid field value by entering

the word INVALID with the NE relational operator. You can use the word INVALID for alphanumeric, binary, packed decimal, and zoned decimal fields only. For numeric fields, any value that does not conform to the field's data type is invalid. For alphanumeric fields, any value that contains non-displayable data is invalid.

For relational operators BT and NB, enter two values separated by a semicolon (for example, BT 0.00;9.99). In most cases you have sufficient space to enter the two values.

Relational operators CO and NC can be used to scan a field within each segment for the presence or absence of a particular character string. The string to be searched is entered in the Field Value field. Trailing blanks within the field value are ignored and are not included in the search string. To search for mixed case or lower case text, enter CAPS OFF before specifying the criteria. Only text exactly matching the upper/lower case spelling is found (for example, SMITH and Smith are different strings).

Note: COBOL Index fields and PL/I Pointer and Floating Binary fields are the only field types that you can enter hexadecimal strings for in the Field Value field.

Extract with Keys from Input File

When the extract is based on key values read from an input file and either the data in the dataset is not in the default format or you want to supply additional selection criteria, you must specify the location, length, and type of data to be used for the key values. Specify this information in the field value as follows:

```
INPUT(s,l,t)
```

s The starting position within the logical record of the dataset. This position is relative to 1.

l The length of the data in the logical record of the dataset.

t The type of the data in the logical record of the dataset.

- **C** Character data
- **X** Hexadecimal display (two characters for each byte) data
- **Z** Internal format data

This format of the field value is only valid for the keys of the FROM database root segment. If entered on another field, the value is treated as a literal.

At execution time, the data is read from the input dataset and converted to the format associated with that field. The use of formatted field selection criteria allows you to specify which parts of the logical record comprise the key value and how the data is to be converted.

Unformatted Criteria Screen

The Unformatted Criteria screen is displayed when you select unformatted field criteria on the Field Criteria List screen. This screen is used to control the selection of database segments based on character or hexadecimal field values. Unformatted field criteria are processed similarly to formatted field criteria. Each field criterion within a selection criteria is ANDed together. However, each field criterion is ORed together.

Figure 8-15. Unformatted Criteria Screen

```
File-AID for IMS  ---------  Unformatted Criteria  ---------------- LINE 00001
COMMAND ===>                                                  SCROLL ===> CSR

   Criteria set: 1
   Segment name: ORDR010                        Data base access:
Criteria number: 2

Enter unformatted field criteria below:
Start Pos    Length     REL OP      ---------Field Value----------
  _____      _____        __        ______________________________
  _____      _____        __        ______________________________
  _____      _____        __        ______________________________
  _____      _____        __        ______________________________
  _____      _____        __        ______________________________
  _____      _____        __        ______________________________
  _____      _____        __        ______________________________
  _____      _____        __        ______________________________
  _____      _____        __        ______________________________
  _____      _____        __        ______________________________
  _____      _____        __        ______________________________
  _____      _____        __        ______________________________

Enter END command to return to field criteria list
```

Data Base Access

Displays whether database access to the root segments is direct or sequential. Refer to "Direct Access Processing" on page 8-26 for more information. This field is displayed only for root segments.

Start Pos

Enter the start position within the segment where you want selection criteria to be applied. The start position can range from 1 to 32,767 provided it does not exceed the segment length.

Length

Enter the number of positions within the segment that you want to compare. For all relational operators except CO and NC, the value must be in the range 1 to 30. For the CO and NC relational operators, the value must be in the range 1 to 32,767. In all cases, the length plus the start position must not exceed the segment length. The Length value must also be equal to or greater than the representation of the data (in bytes) in the Field Value field.

For all relational operators except CO and NC, when length exceeds the actual length of the entered field value, blanks are padded to the right of the field value. If the Length field is left blank, the default length is the actual length of the specified field value.

For the CO and NC relational operators, the Length field determines the portion of each segment that is searched for the field value. Trailing blanks within the field value are ignored and are not included in the search string. If the Length field is left blank, each segment is searched from the start position through the end of the segment.

REL OP

Enter the relational operators in this field. Following are the valid values:

= or EQ	Equal to
¬ = or NE	Not equal to
> or GT	Greater than

< or LT	Less than
>= or GE	Greater than or equal to
<= or LE	Less than or equal to
BT	Within a range of two values (endpoints inclusive)
NB	Outside a range of two values (endpoints exclusive)
CO	Search within a field for a character string
NC	Search within a field for absence of a character string

The BT relational operator includes the endpoints of the range you specify. The NB relational operator does not include the endpoints. The BT and NB relational operators are not valid for Double-Byte Character Set (DBCS) support.

Extract based on key values

EQ is the only valid relational operator for key values.

Field Value

For fields with relational operators other than BT and NB, enter either a character string or a hexadecimal string. Hexadecimal strings are entered in the format Xnnn... or X'nnn...'. For relational operators BT and NB, enter two values separated by a semicolon. The values can be HEX strings, character strings, or both. For example, the following strings are equivalent:

```
XF1 3       or
X'F1';XF3   or
1;3
```

If you want to compare a field to blanks (HEX40's), simply leave the Field Value field blank and enter the desired number of blanks for comparison in the Length field.

Extract with Keys from Input File

When the extract is based on key values read from an input file and either the data in the dataset is not in the default format or you want to supply additional selection criteria, you must specify the location, length, and type of data to be used for the key values. Specify this information in the field value as follows:

```
INPUT(s,l,t)
```

s The starting position within the logical record of the dataset. This position is relative to 1.

l The length of the data in the logical record of the dataset.

t The type of the data in the logical record of the dataset.

C	Character data
X	Hexadecimal display (two characters for each byte) data
Z	Internal format data

This format of the field value is only valid for the keys of the FROM database root segment. If entered on another field, the value is treated as a literal.

Formatted/Unformatted Field Criteria Primary Commands

In addition to the "Common Primary Commands" on page 8-7, the following primary commands can be used on the Formatted and Unformatted Field Criteria screens:

CAPS Controls whether alphabetic data entered is automatically translated to upper case or left as-is.

EXCLUDE Unprotects/protects the left side of the screen, which enables you to enter the X line command to exclude lines (Formatted Field Criteria only).

RESET Redisplays previously excluded lines (Formatted Field Criteria only).

DBCS Changes display format to DBCS.

EBCDIC Changes display format to EBCDIC.

MIXED Changes display format to mixed DBCS and EBCDIC.

Chapter 11, "Primary Commands" provides the syntax for each of these commands.

With Release 7.1, the ZOOMH primary command can also be used on the Formatted Field Criteria screen.

ZOOMH

The ZOOMH command enables you to edit field values in a scrollable panel in three-line vertical HEX mode. This command is available for field values that have a length of up to 30 bytes with displayable characters and non-displayable hexadecimal values.

Note: The ZOOMH command can be used for fields with all relational operators, except BT and NB.

To display the Zoomh Edit panel, execute the ZOOMH primary command while your cursor is on the field value you wish to zoom in the Formatted Field Criteria screen. The field value displays in three-line vertical hexadecimal format, identical to the Edit Unformatted screen (Figure 4-23 on page 4-44).

The following primary commands can be used on the Zoomh Edit panel:

CANCEL Restores the contents of the current field to those that existed before you changed it.

END Terminates the Zoomh Edit panel and returns you to the previous Formatted Field Criteria screen.

RETURN Saves any changes made and returns you to the Primary Option menu.

Direct Access Processing

Based on unformatted and formatted field selection criteria, there are two ways that File-AID for IMS/ISPF can access primary database root segments during extract processing. Direct access to root segments is performed using qualified GU (Get Unique) DL/I calls. Sequential access is performed using unqualified GN (Get Next) DL/I calls.

The requirements for direct or sequential database access vary according to the DL/I access methods. File-AID for IMS/ISPF groups DL/I access methods into the following categories to determine a direct access call:

- HIDAM, HISAM, SHISAM, and MSDB
- HDAM and DEDB
- HSAM and SHSAM

HIDAM, HISAM, SHISAM, and MSDB

One of the following relational operators must be specified for the first position (byte) of the root segment key: BT, EQ, GE, GT, LE, or LT. Figure 8-16 is an example of formatted field selection criteria with partial key qualification.

Figure 8-16. Formatted Criteria Screen

```
File-AID for IMS  -------  Formatted Criteria  ------------------- LINE 00001
COMMAND ===>                                                  SCROLL ===> CSR
Seg  ORDR010  ORDER ROOT                          Data base access: SEQUENTIAL
Criteria no. 1
-------Level number/Data-name------- -Format- RO ---------Field Value----------
01  ORDER-ROOT-DATA
  05  ORDER-ROOT-KEY
    07  ORDER-NUMBER-PREFIX          C   2  K >  AA
    07  ORDER-NUMBER                 Z   4  K
  05  ORDER-DESCRIPTION              C  40
      (POS 31-40)
  05  CUSTOMER-NUMBER                C   6    =  CN0001
  05  PLANNED-ORDER-QUANTITY         PS  5
  05  PLANNED-ORDER-AMOUNT           P   5  2
  05  ORDER-TYPE                     C   2
  05  ACTUAL-ORDER-QUANTITY          PS  5
  05  TOTAL-SCRAP-QUANTITY           PS  5
  05  TOTAL-SCRAP-REDEFINES          RDEFINES    TOTAL-SCRAP-QUANTITY
                                     C   3
  05  ORDER-STATUS                   Z   2
  05  FILLER                         C   1

Enter END command to return to field criteria list
```

Data Base Access

Indicates direct or sequential access. This field value is based on the segment key entries. The key fields are noted by a K in the last position of the Format field. There are two possible methods of direct access depending on how the key is qualified:

Whole key specified.

If all positions of the key are specified with an EQ relational operator, then a fully qualified GU call is used to access the root segment directly.

Partial key specified.

If the relational operator BT, GE, GT, LE or LT is specified or not all positions of the key are qualified, the first call is a fully qualified GU call to establish a starting point within the primary database. The remainder of the root calls are sequential GN DL/I calls until the end of the database or the end of a specific range is reached.

Access to the database is sequential using GN DL/I calls in the following situations:

- Key value is not specified.
- Key value is not specified for the first position of the key.
- CO, NB, NC, or NE relational operators are specified for the first position of the key.

HDAM and DEDB

All positions of the root segment key must be specified with a relational operator of EQ. Figure 8-17 is an example of unformatted field selection criteria with full key qualification.

Figure 8-17. Unformatted Criteria Screen - Full Key Qualificaton

```
File-AID for IMS  ---------  Unformatted Criteria  -- DATA BASE ACCESS CHANGED
COMMAND ===>                                                 SCROLL ===> CSR
I207 WHEN THIS SEL CRIT MEMBER IS APPLIED, DATA BASE ACCESS WILL BE DIRECT
   Criteria set: 1
   Segment name: ORDR010                        Data base access: DIRECT
Criteria number: 1

Enter unformatted field criteria below:
Start Pos    Length     REL OP      ---------Field Value----------
  1          6            =         AA2222
  47         6            =         CN0001
  _____      _____        __        ______________________________
  _____      _____        __        ______________________________
  _____      _____        __        ______________________________
  _____      _____        __        ______________________________
  _____      _____        __        ______________________________
  _____      _____        __        ______________________________
  _____      _____        __        ______________________________
  _____      _____        __        ______________________________
  _____      _____        __        ______________________________
  _____      _____        __        ______________________________

Enter END command to return to field criteria list
```

Data Base Access

Indicates direct or sequential access. This field value is based on the segment key entries.

If field selection criteria using the EQ relational operator is not specified for all positions of the root key, access to the database is sequential using GN DL/I calls.

HSAM and SHSAM

Access to the root segments for these databases is always sequential whether or not field selection criteria are specified.

If editing the unformatted/formatted field selection criteria causes the database access to change, an informational message displays the current database access status.

Relationship Criteria

If a segment occurrence passes segment selection criteria, field criteria are applied, if any exist (refer to “Segment Criteria” on page 8-7 and “Field Criteria” on page 8-12). If a segment occurrence passes all selection criteria, then the relationship criteria that control the selection of related database records are applied.

Relationship criteria enable you to control the selection of IMS logical and application related database records. For every logical child and/or source segment in an application relationship selected, File-AID for IMS/ISPF goes to the root of the destination parent and/or the target root to select the root and all subordinate segments. This process is called chasing relationships. If the related database record also has a logical and/or application relationship, then the process of chasing relationships repeats itself until all relationships are resolved.

Relationship Specification

The Relationship Specification screen is displayed when you select Option 3 on the Selection Criteria - Menu screen or enter the RELATIONSHIP command on any of the screens within Option 6 .

Figure 8-18. Relationship Specification Screen

```
File-AID for IMS  ---------  Relationship Specification  ----------------------
COMMAND ===>



Select related data base records ===> Y    (N = Exclude all related data bases
                                            Y = Selectively exclude data base
                                                relationships)





Enter N to exclude all related data bases from the selection process and return
   to the Selection Criteria - Menu screen

Enter Y to proceed to the RELATIONSHIP CRITERIA screen where you can exclude
   one or more related data bases from the selection process and/or limit the
   number of related data base records accessed during the selection process
```

Select Related Data Base Records

Enter Y if you want to selectively exclude database relationships. Y is the default entry. If you want to exclude all relationships, enter N.

Terminating the Screen

Do one of the following to terminate the Relationship Specification screen:

- Enter Y and press ENTER. The Relationship Criteria screen (Figure 8-19 on page 8-30) is displayed. Enter N and press ENTER to display the Selection Criteria - Menu screen.
- Enter the FIELD or SEGMENT command to access the corresponding Field Criteria Set List (page 8-13) or Segment Criteria - Segment List screen (Figure 8-5 on page 8-8).
- Enter the END command to return to the Selection Criteria - Menu screen.
- Enter the RETURN command to terminate the edit session and return to the Primary Option Menu.
- Enter the CANCEL command to terminate the edit session and return to the Selection Criteria - Dataset Specification screen.

Relationship Criteria

The Relationship Criteria screen is displayed when you specify Y in the Select related data base records field on the Relationship Specification screen. The Relationship Criteria screen is used to exclude and limit the selection of logically related databases and, if applied, application related databases in your selection criteria.

The message "*** END OF RELATIONS ***" is displayed after the last relationship on the Relationship Criteria screen.

Figure 8-19. Relationship Criteria Screen

```
File-AID for IMS  --------  Relationship Criteria  ---------------- LINE 00001
COMMAND ===>                                                  SCROLL ===> CSR

Default max relationship occurrences to chase ===> 0         (0 = No limit)

Line      Source    Source    Related                          Occurrences
Cmd      --DBD---  -Segment  ---DBD---  ------Comment-------  -To Chase -
         PORDR
 _                 ORDR050   PCUST      LOGICAL- BI-DIR REL        ___
         PCUST
 _                 VORDR050  PORDR      LOGICAL- BI-DIR REL        ___
             ***  E N D   O F   R E L A T I O N S  ***









Enter X to exclude a link to a target database or
Use Occurrences to Chase field to limit relations crossed to IMS/APPL REL DB
Enter END command when relationships have been fully specified
```

Default Max Relationship Occurrences to Chase

Enter a maximum number of relationship occurrences to chase. You can specify a value from 0 to 99,999,999, where 0 sets no limit on the number of relationship occurrences to chase. This value is used when an entry is not given in the Occurrences to Chase field for a logical or application relationship.

Line Cmd

Enter X to exclude a link to a target database in the selection criteria. Only the X line command is allowed.

Source DBD

This is a protected and non-modifiable field that displays the source DBD name for the target or related DBD. The target DBD is the DBD pointed to by either an IMS logical child segment or a source segment in an application relationship. The first source DBD name is the primary DBD the selection criteria are based on. Each following source DBD name was identified by File-AID for IMS as a DBD needed to resolve a previously identified source DBD's IMS logical relationship or application relationship.

Source Segment

This is a protected and non-modifiable field that displays the segment name in the source DBD that points to the target DBD. This segment points to the target DBD when it is an IMS logical child segment or a segment that contains the keys for the root of the target database.

Related DBD

This is a protected and non-modifiable field that displays the DBD name for the target database defined in an application relationship or IMS logical relationship.

Comment

This is a protected and non-modifiable field that displays generated comments on the type of relationship between the source segment and its related DBD. Types of relationships identified are logical unidirectional relationships, logical bidirectional relationships, and application relationships.

Occurrences To Chase

Enter the number of application or logical relationships to be chased, per source segment, in each database record. This value takes precedence over the value for the Default Max Relationship Occurrences to Chase field, unless an entry is not made. If no entry is made, then the default for the maximum number of relationship occurrences to chase specified in the heading is used. For example, in Figure 8-19 on page 8-30 the number of occurrences to chase for the source PORDR DBD's application relation defaults to no limit because an entry was not made in the chase field. For more information, refer to "Limiting Target Data Bases" on page 8-31.

Limiting Target Data Bases

The value entered in the Occurrences To Chase or Default Max Relationship Occurrences to Chase field controls the number of segment occurrences to chase in a logical and/or application relationship. If a chased occurrence resides in a database with a logical and/or application relationship, then the value in this field for that particular relationship again controls the number of occurrences to chase within that database record. This process repeats itself until all desired relationships are resolved. The recommended value for the number of occurrences to chase on a bidirectional logical relationship is 2 or 3.

When you exclude a link to a target database in the selection criteria, those segments in the target database for that relationship are not selected.

If selection criteria are being applied to databases with recursive logical relationships (within the primary database or across related databases) and no limit is specified, every segment in the database is selected to resolve all the logical relationships. This process occurs regardless of any other selection criteria you specify. By entering a value greater than zero for Default Max Relationship Occurrences to Chase or the segment's Occurrences To Chase field, this situation can be prevented and a more desirable subset of the databases can be selected.

Note: If you enter a value greater than zero in this field, all logical children are extracted and written to the extract file. However, only some of the logical children have their related database records chased and extracted. Therefore, the extract file contains all logical child segments for the roots selected but only a portion of the destination parents that these logical children are to be connected to. When this extract file is used to load a database in Option 4.2, care should be taken to only use update mode (load processing options U or I). File-AID for IMS/ISPF reports on all logical child segments where there are no related destination parents. This is not an error but is for informational purposes only. Loading an uninitialized database (load processing option L) with this type of extract file should not be done. A database loaded in this manner can become unusable because IMS is unable to connect all logical children with their destination parents.

The example on page 8-30 illustrates limiting the selection of target databases based on two databases, DB1 and DB2. These databases have a physically paired bidirectional logical relationship between them. File-AID for IMS enables you to limit the selection of the segment occurrences for each direction of a paired relationship.

Figure 8-20. Example of Limiting Target Data Bases - Part 1

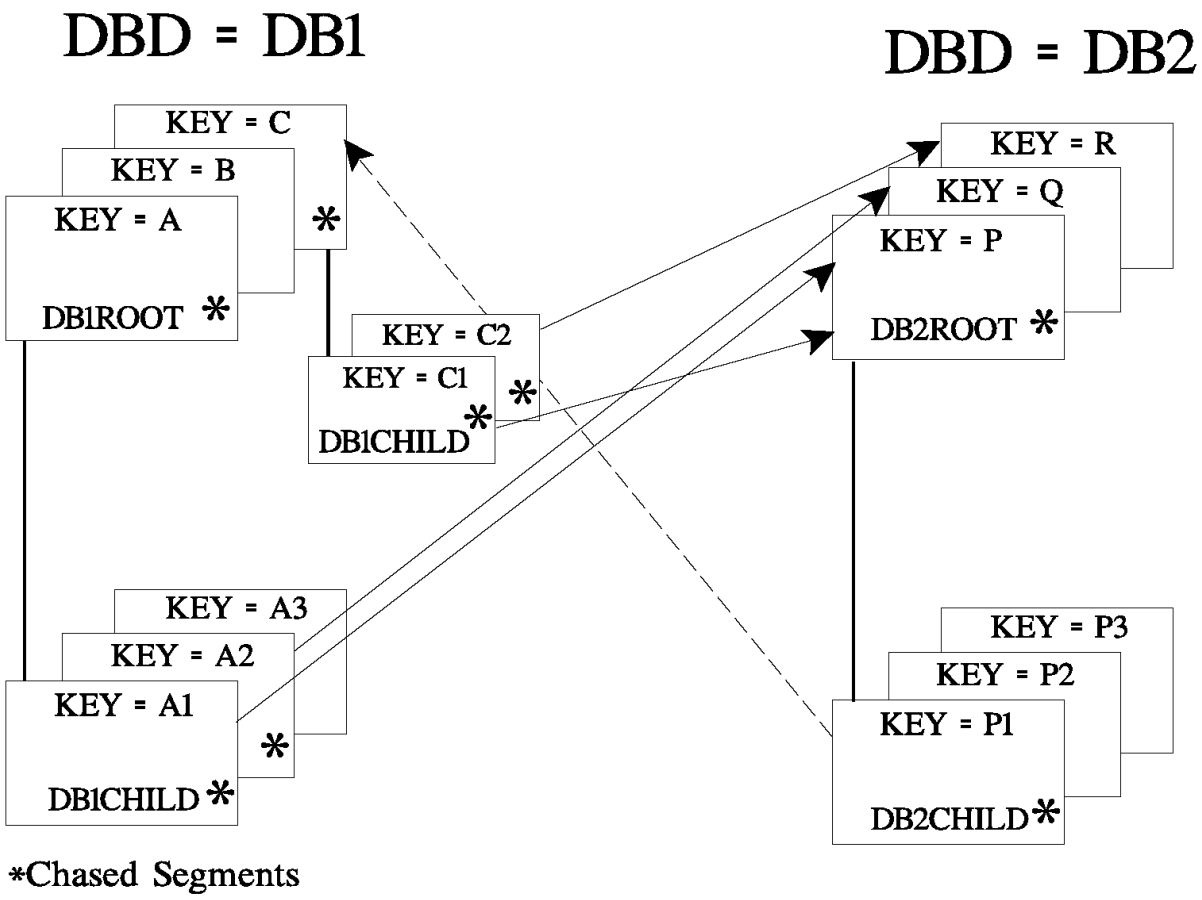

Figure 8-21. Example of Limiting Target Data Bases - Part 2

```
File-AID for IMS  --------  Relationship Criteria  ----------------- LINE 00001
COMMAND ===>                                                  SCROLL ===> CSR

Default max relationship occurrences to chase ===> 0         (0 = No limit)

Line      Source    Source    Related                          Occurrences
Cmd      --DBD---  -Segment  ---DBD---  ------Comment-------  -To Chase -
         PORDR
 _                ORDR050   PCUST      LOGICAL- BI-DIR REL        2__
         PCUST
 _                VORDR050  PORDR      LOGICAL- BI-DIR REL        1__
              ***  E N D   O F   R E L A T I O N S  ***



Enter X to exclude a link to a target data base or
Use OCCURRENCES TO CHASE field to limit relations crossed to IMS/APPL REL DB
Enter END command when relationships have been fully specified
```

The figure on page 8-30 shows the two databases' relationships on the Relationship Criteria screen. To resolve the paired relationship from DB1 to DB2, the first two DB1CHILD segments chase a DB2ROOT database record. To resolve the paired relationship from DB2 to DB1, the first DB2CHILD segment chases a DB1ROOT database record.

For the DB1ROOT segment with key A, each of the two DB1CHILD segments, (A1 and A2), chase one DB2 record. For the DB1CHILD segment with key A1, the DB2 database record that contains DB2CHILD with key P1 is chased. Because DB2CHILD with key P1 points to DB1ROOT with key C and two occurrences are to be chased from DB1 to DB2, the two DB1 database records that contain DB1CHILD with keys C1 and C2 are chased. For DB1CHILD with key C1, further selection of DB2 database records ends because File-AID for IMS recognizes that the DB2ROOT with key P has already been selected. If DB1CHILD with key C1 had pointed to a DB2ROOT with a key value not already selected, File-AID for IMS would continue chasing the bidirectional relationship until the relationship was resolved.

If the paired relationship from DB2 to DB1 had been excluded from the selection criteria, only database records from DB1 to DB2 would have been selected. In the previous example, only the first two DB1CHILD segments under each DB1ROOT would have their corresponding DB2ROOT database records chased. No DB1ROOT database records pointed to by DB2CHILD segments would be selected because this relationship has been excluded. This technique of excluding relationships can create a more desirable subset of bidirectional logical relationships.

Selection Criteria Examples

The following examples use a sample Medical Data Base to illustrate the creation of Field Selection Criteria. Figure 8-22 displays the structure of the Hospital Data Base. All examples assume that sub-option 2, Field Criteria, on the Selection Criteria Menu screen was selected.

Figure 8-22. Structure of the Hospital Data Base

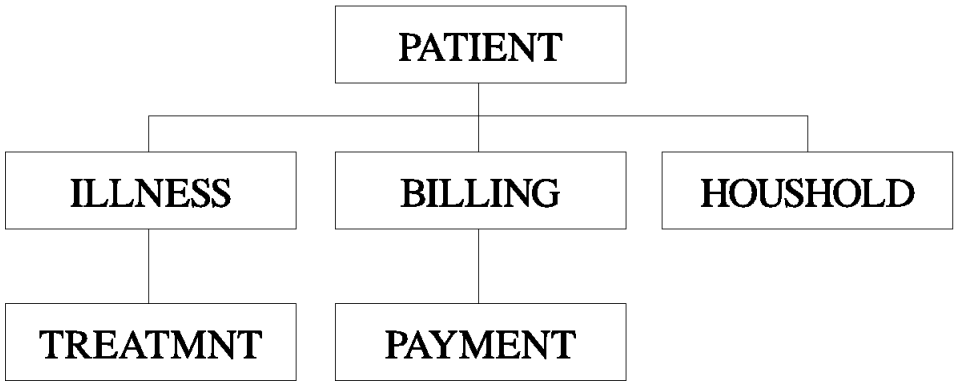

Example 1

This example shows how to retrieve information on all patients who had a cold.

Figure 8-23. Field Criteria Set List Screen

```
File-AID for IMS  ---------  Field Criteria Set List  -----  ROW 1 TO 13 OF 13
COMMAND ===>                                                  SCROLL ===> CSR

Data base: MEDICAL

To create Field Criteria, select a line and enter the optional description
Enter S, I, D, or R to select, insert, delete or repeat a criteria set

  Line Criteria                                                  Data base
  Cmd    Set     -------------Criteria Set Description-------------  Access
  S              FIND ALL PATIENTS WITH COLD
  __             ____________________________________________________
  __             ____________________________________________________
  __             ____________________________________________________
  __             ____________________________________________________
  __             ____________________________________________________
  __             ____________________________________________________
  __             ____________________________________________________
  __             ____________________________________________________
  __             ____________________________________________________
  __             ____________________________________________________
  __             ____________________________________________________
  __             ____________________________________________________
                        ***  END OF CRITERIA SET LIST  ***
```

Select the ILLNESS segment using the S line command as shown in Figure 8-24.

Figure 8-24. Field Criteria - Segment List Screen

```
File-AID for IMS  ----------  Field Criteria - Segment List    ROW 1 TO 6 OF 6
COMMAND ===>                                                   SCROLL ===> CSR
Criteria set: 1                                Set data base access:

Enter an S line command to select a segment for field criteria
In EXTRACT SEGMENT, enter Y to extract segments that pass criteria, or
     N to not extract segments even if they pass criteria, or
     T to extract the twins of the segment passing criteria
Enter A in EXTRACT CHILDREN to extract all children of passing segments
Field criteria on the same seg type are ORed; on different seg types are ANDed

Max data base records to extract for this set ===> 0           (0 = No limit)
Line Extract Extract                                              FMT  UNFMT
Cmd  Segment Children -----Level-----  Segment-  --Description--  -Criteria-
 _      Y       _     1 DBD-MEDICAL    PATIENT   PATIENT INFO     0     0
 S      Y       _      2               ILLNESS   ILLNESS INFO     0     0
 _      Y       _       3              TREATMNT  TREATMENT INFO   0     0
 _      Y       _      2               BILLING   BILLING INFO     0     0
 _      Y       _       3              PAYMENT   PAYMENT INFO     0     0
 _      Y       _      2               HOUSHOLD  HOUSEHOLD INFO   0     0
                         ***  END OF SEGMENT LIST  ***
```

Create formatted field criteria as shown in Figure 8-25.

Figure 8-25. Field Criteria List Screen

```
File-AID for IMS  -----------  Field Criteria List  -------  ROW 1 TO 10 OF 10
COMMAND ===>                                                  SCROLL ===> CSR

Criteria set: 1
Segment name: ILLNESS

To create Field Criteria, select a line and enter the FORMATTED indicator (Y/N)
  and the optional description
Enter S, I, D, or R to select, insert, delete, or repeat Field Criteria
The relationship between each field criterion is ORed

   Line  Criteria
   Cmd    Number  Formatted    ----Condition Description-----
   S                  Y        ILLNESS IS - COLD
   __                 _        ______________________________
   __                 _        ______________________________
   __                 _        ______________________________
   __                 _        ______________________________
   __                 _        ______________________________
   __                 _        ______________________________
   __                 _        ______________________________
   __                 _        ______________________________
   __                 _        ______________________________
                     ***  END OF FIELD CRITERIA LIST  ***
```

Specify field criteria as EQ COLD in the ILLNESS-NAME field as shown in Figure 8-26.

Figure 8-26. Formatted Criteria Screen

```
File-AID for IMS  -----------  Formatted Criteria  ---------------- LINE 00001
COMMAND ===>                                                  SCROLL ===> CSR
Seg  ILLNESS  ILLNESS INFO
Criteria no. 1
-------Level number/Data-name------- -Format- RO ---------Field Value----------
05  ILLNESS-SEGMENT
  07  ILLNESS-DATE
    09  ILLNESS-DATE-YYYY            C   4  K
    09  ILLNESS-DATE-MMDD            C   4  K
  07  ILLNESS-DATE-RDF               RDEFINES    ILLNESS-DATE
    09  ILLNESS-YYYYMMDD             C   8  K
  07  ILLNESS-NAME                   C  10    EQ COLD
 ** END OF LAYOUT. LENGTH =    18 **









Enter END command to return to field criteria list
```

Example 2

This example shows how to retrieve information on all patients with the flu who were treated by Dr. Spock, including the treatment information.

Figure 8-27. Field Criteria Set List Screen

```
File-AID for IMS  ---------  Field Criteria Set List  -----  ROW 1 TO 13 OF 13
COMMAND ===>                                                 SCROLL ===> CSR

Data base: MEDICAL

To create Field Criteria, select a line and enter the optional description
Enter S, I, D, or R to select, insert, delete or repeat a criteria set
  Line Criteria                                                Data base
  Cmd    Set     -------------Criteria Set Description-------------  Access
  S              FIND ALL FLU PATIENTS AND ALL TREATMENTS
  __             ________________________________________________
  __             ________________________________________________
  __             ________________________________________________
  __             ________________________________________________
  __             ________________________________________________
  __             ________________________________________________
  __             ________________________________________________
  __             ________________________________________________
  __             ________________________________________________
  __             ________________________________________________
  __             ________________________________________________
  __             ________________________________________________
                        ***  END OF CRITERIA SET LIST  ***
```

Select the ILLNESS segment. Specify A in the EXTRACT CHILDREN field to extract all the children as shown in Figure 8-28.

Figure 8-28. Field Criteria -Segment List Screen

```
File-AID for IMS  ----------  Field Criteria - Segment List    ROW 1 TO 6 OF 6
COMMAND ===>                                                   SCROLL ===> CSR
Criteria set: 1                                Set data base access:

Enter an S line command to select a segment for field criteria
In EXTRACT SEGMENT, enter Y to extract segments that pass criteria, or
     N to not extract segments even if they pass criteria, or
     T to extract the twins of the segment passing criteria
Enter A in EXTRACT CHILDREN to extract all children of passing segments
Field criteria on the same seg type are ORed; on different seg types are ANDed

Max data base records to extract for this set ===> 0           (0 = No limit)
Line Extract Extract                                              FMT  UNFMT
Cmd  Segment Children -----Level-----  Segment-  --Description--  -Criteria-
 _      Y       _     1 DBD-MEDICAL    PATIENT   PATIENT INFO     0     0
 _      Y       A      2               ILLNESS   ILLNESS INFO     0     0
 _      Y       _       3              TREATMNT  TREATMENT INFO   0     0
 _      N       _      2               BILLING   BILLING INFO     0     0
 _      N       _       3              PAYMENT   PAYMENT INFO     0     0
 _      N       _      2               HOUSHOLD  HOUSEHOLD INFO   0     0
                         ***  END OF SEGMENT LIST  ***
```

Create formatted field criteria as shown in Figure 8-29.

Figure 8-29. Field Criteria List Screen

```
File-AID for IMS  -----------  Field Criteria List  -------  ROW 1 TO 10 OF 10
COMMAND ===>                                                  SCROLL ===> CSR

Criteria set: 1
Segment name: ILLNESS

To create Field Criteria, select a line and enter the FORMATTED indicator (Y/N)
  and the optional description
Enter S, I, D, or R to select, insert, delete, or repeat Field Criteria
The relationship between each field criterion is ORed

   Line  Criteria
   Cmd    Number  Formatted    ----Condition Description-----
   S                  Y        ILLNESS IS - FLU
   __                 _        ______________________________
   __                 _        ______________________________
   __                 _        ______________________________
   __                 _        ______________________________
   __                 _        ______________________________
   __                 _        ______________________________
   __                 _        ______________________________
   __                 _        ______________________________
   __                 _        ______________________________
                     ***  END OF FIELD CRITERIA LIST  ***
```

Specify criteria as shown in Figure 8-30.

Figure 8-30. Formatted Criteria Screen

```
File-AID for IMS  -----------  Formatted Criteria  ---------------- LINE 00001
COMMAND ===>                                                  SCROLL ===> CSR
Seg  ILLNESS  ILLNESS INFO
Criteria no. 1
-------Level number/Data-name------- -Format- RO ---------Field Value----------
05  ILLNESS-SEGMENT
  07  ILLNESS-DATE
    09  ILLNESS-DATE-YYYY            C   4  K
    09  ILLNESS-DATE-MMDD            C   4  K
  07  ILLNESS-DATE-RDF               RDEFINES    ILLNESS-DATE
    09  ILLNESS-YYYYMMDD             C   8  K BT 19900101;19910712
  07  ILLNESS-NAME                   C  10    =  FLU
 ** END OF LAYOUT. LENGTH =    18 **









Enter END command to return to field criteria list
```

Return to the Field Criteria - Segment List screen and select the TREATMNT segment. Create formatted criteria and specify field criteria as EQ SPOCK in the TREATMNT-DOCTOR field.

Figure 8-31. Formatted Criteria Screen

```
File-AID for IMS  -----------  Formatted Criteria  ----------------- LINE 00001
COMMAND ===>                                                  SCROLL ===> CSR
Seg  TREATMNT TREATMENT INFO
Criteria no. 1     RCD TYPE VALUE1: ASPRIN
-------Level number/Data-name------- -Format- RO ---------Field Value----------
05  TREATMNT-SEGMENT-1
  07  TREATMNT-DATE-YYYY             C   4  K
  07  TREATMNT-DATE-MMDD             C   4  K
  07  TREATMNT-MEDICINE              C  10       RECORD TYPE FIELD
  07  TREATMNT-QUANTITY              C   4
  07  TREATMNT-DOCTOR                C  10    =  SPOCK
 ** END OF LAYOUT. LENGTH =    32 **









Enter END command to return to field criteria list
```

Example 3

This example shows how to retrieve information on all patients who had a cold and were treated by Dr. Spock and all patients who had the flu and were treated by Dr. Williams. Enter descriptions for both sets to be created and then select the first set.

Figure 8-32. Field Criteria Set List Screen

```
File-AID for IMS  ---------  Field Criteria Set List  -----  ROW 1 TO 13 OF 13
COMMAND ===>                                                  SCROLL ===> CSR

Data base: MEDICAL

To create Field Criteria, select a line and enter the optional description
Enter S, I, D, or R to select, insert, delete or repeat a criteria set
  Line Criteria                                                  Data base
  Cmd    Set     -------------Criteria Set Description-------------  Access
  S              FIND ALL FLU PATIENTS WHOSE DOCTOR IS WILLIAMS
  __             FIND ALL COLD PATIENTS WHOSE DOCTOR IS SPOCK
  __             ____________________________________________________
  __             ____________________________________________________
  __             ____________________________________________________
  __             ____________________________________________________
  __             ____________________________________________________
  __             ____________________________________________________
  __             ____________________________________________________
  __             ____________________________________________________
  __             ____________________________________________________
  __             ____________________________________________________
  __             ____________________________________________________
                        ***  END OF CRITERIA SET LIST  ***
```

Only patient segment data is required for this example, so set all EXTRACT SEGMENT indicators of patient dependent segments to N on the Field Criteria - Segment List screen in Figure 8-33. Select the ILLNESS segment.

Figure 8-33. Field Criteria - Segment List Screen

```
File-AID for IMS  ----------  Field Criteria - Segment List    ROW 1 TO 6 OF 6
COMMAND ===>                                                   SCROLL ===> CSR
Criteria set: 1                              Set data base access:

Enter an S line command to select a segment for field criteria
In EXTRACT SEGMENT, enter Y to extract segments that pass criteria, or
     N to not extract segments even if they pass criteria, or
     T to extract the twins of the segment passing criteria
Enter A in EXTRACT CHILDREN to extract all children of passing segments
Field criteria on the same seg type are ORed; on different seg types are ANDed

Max data base records to extract for this set ===> 0           (0 = No limit)
Line Extract Extract                                              FMT  UNFMT
Cmd  Segment Children -----Level-----  Segment-  --Description--  -Criteria-
 _      Y       _     1 DBD-MEDICAL    PATIENT   PATIENT INFO     0     0
 S      N       _      2               ILLNESS   ILLNESS INFO     0     0
 _      N       _       3              TREATMNT  TREATMENT INFO   0     0
 _      N       _      2               BILLING   BILLING INFO     0     0
 _      N       _       3              PAYMENT   PAYMENT INFO     0     0
 _      N       _      2               HOUSHOLD  HOUSEHOLD INFO   0     0
                         ***  END OF SEGMENT LIST  ***
```

Create formatted criteria as shown in Figure 8-34.

Figure 8-34. Field Criteria List Screen

```
File-AID for IMS  -----------  Field Criteria List  -------  ROW 1 TO 10 OF 10
COMMAND ===>                                                  SCROLL ===> CSR

Criteria set: 1
Segment name: ILLNESS

To create Field Criteria, select a line and enter the FORMATTED indicator (Y/N)
  and the optional description
Enter S, I, D, or R to select, insert, delete, or repeat Field Criteria
The relationship between each field criterion is ORed

   Line  Criteria
   Cmd    Number  Formatted    ----Condition Description-----
   S                 Y        ILLNESS IS - FLU
   __                _        ______________________________
   __                _        ______________________________
   __                _        ______________________________
   __                _        ______________________________
   __                _        ______________________________
   __                _        ______________________________
   __                _        ______________________________
   __                _        ______________________________
   __                _        ______________________________
                    ***  END OF FIELD CRITERIA LIST  ***
```

Specify field criteria as EQ FLU in the ILLNESS-NAME field as shown in Figure 8-35.

Figure 8-35. Formatted Criteria Screen

```
File-AID for IMS  -----------  Formatted Criteria  ----------------- LINE 00001
COMMAND ===>                                                  SCROLL ===> CSR
Seg  ILLNESS  ILLNESS INFO
Criteria no. 1
-------Level number/Data-name------- -Format- RO ---------Field Value----------
05  ILLNESS-SEGMENT
  07  ILLNESS-DATE
    09  ILLNESS-DATE-YYYY            C   4  K
    09  ILLNESS-DATE-MMDD            C   4  K
  07  ILLNESS-DATE-RDF               RDEFINES    ILLNESS-DATE
    09  ILLNESS-YYYYMMDD             C   8  K
  07  ILLNESS-NAME                   C  10    =  FLU
 ** END OF LAYOUT. LENGTH =    18 **









Enter END command to return to field criteria list
```

Then, return to the Field Criteria - Segment List screen and select the TREATMNT segment and create formatted field criteria.

Specify field criteria EQ WILLIAMS in the TREATMNT-DOCTOR field. Return to the Field Criteria Set List screen.

Figure 8-36. Formatted Criteria Screen

```
File-AID for IMS  -----------  Formatted Criteria  ----------------- LINE 00001
COMMAND ===>                                                  SCROLL ===> CSR
Seg  TREATMNT TREATMENT INFO
Criteria no. 1     RCD TYPE VALUE1: ASPRIN
-------Level number/Data-name------- -Format- RO ---------Field Value----------
05  TREATMNT-SEGMENT-1
  07  TREATMNT-DATE-YYYY             C   4  K
  07  TREATMNT-DATE-MMDD             C   4  K
  07  TREATMNT-MEDICINE              C  10       RECORD TYPE FIELD
  07  TREATMNT-QUANTITY              C   4
  07  TREATMNT-DOCTOR                C  10    =  WILLIAMS
 ** END OF LAYOUT. LENGTH =    32 **









Enter END command to return to field criteria list
```

Select the second criteria set and repeat the process described earlier to create field criteria to select all patients with a cold whose doctor was Spock.

Figure 8-37. Formatted Criteria Screen

```
File-AID for IMS  ---------  Field Criteria Set List  -------  ROW 1 TO 2 OF 2
COMMAND ===>                                                   SCROLL ===> CSR

Data base: MEDICAL

To create Field Criteria, select a line and enter the optional description
Enter S, I, D, or R to select, insert, delete or repeat a criteria set
  Line Criteria                                                Data base
  Cmd    Set     -------------Criteria Set Description-------------  Access
  __      1      FIND ALL FLU PATIENTS WHOSE DOCTOR IS WILLIAMS     SEQUENTIAL
  S       2      FIND ALL COLD PATIENTS WHOSE DOCTOR IS SPOCK
                        ***  END OF CRITERIA SET LIST  ***
```

Chapter 9. Segment/Layout Cross-Reference

Option 7, XREF, is used to create and maintain segment/layout cross-references (XREFs) for use in the File-AID for IMS/ISPF Browse, Edit, Extract, Print, and Selection Criteria functions, File-AID for IMS/FLEX option functions, and also in the File-AID for IMS/DC/CICS Batch XREF Update Facility. The purpose of a segment/layout XREF is to associate a COBOL or PL/I segment layout with each segment type in a database. The XREF function uses your existing DBD load module members to determine the segment types in the database and then prompts you to enter the corresponding segment layout members for each segment type.

In addition, you can specify segment layout information associated with logical child and concatenated segments defined in the DBD and for segment types with multiple formats (that is, those segment types that require more than one segment layout to define the segment data). You can also use the XREF function to isolate the appropriate layout if multiple segment layouts are contained within a single COBOL or PL/I member or if the segment layout is hard-coded in a COBOL or PL/I program.

Segment/Layout XREF Dataset Specification

The Segment/Layout XREF - Dataset Specification screen is displayed when you select Option 7 on the Primary Option Menu.

Figure 9-1. Segment/Layout XREF - Dataset Specification Screen

```
File-AID for IMS  --  Segment/Layout XREF - Dataset Specification  ------------
COMMAND ===>

Enter member name of segment/layout XREF to be edited:

 Segment/Layout XREF Member  . .          (Blank or pattern for member list)


Use DBDLIB datasets for addition  . . N (Y = Yes; N = No)
```

Segment/Layout XREF Dataset

Enter the dataset name of the segment/layout XREF to be edited. The dataset must conform to the characteristics of a valid segment/layout XREF dataset as described in “Segment Layout Dataset Concatenation” on page 3-4.

Member

Enter the dataset member, if any, of the segment/layout XREF to be edited. If the segment/layout XREF dataset is partitioned and no member is specified, the XREF Member List screen is displayed. Select a member for processing from the Member List screen.

Use DBDLIB Datasets for Addition

Enter Y if you are creating a new XREF or adding DBDs to the XREF.

DBDLIB Dataset 1 and Dataset 2

Enter the DBD LIB dataset names that contain the DBDs you want to add to the XREF. You can enter two DBDLIB datasets to serve as the concatenated source. If you enter two DBD load library names and their blocksizes are different, you must enter the library with the larger blocksize on the first dataset name line. When two DBD libraries are entered, File-AID for IMS/ISPF searches the first library before the second when looking for the DBD member. If you specify only one DBD library, it can be entered on either DBDLIB dataset line.

If your installation has both the COBOL and PL/I language support options installed, you should ensure that your current language mode is compatible with the segment/layout XREF dataset and member you specify. You can change language modes by entering the COBOL or PL/I primary command on this screen or by entering the =0 jump command, which switches you to Option 0 - File-AID for IMS Parameters.

Terminating the Screen

Do one of the following to terminate the Segment/Layout XREF Specification screen:

- Press Enter to proceed to the next screen.

  If you left the XREF Member field blank or pattern, the Segment List screen is displayed (Figure 9-2).

- Enter the END or RETURN primary command to terminate the XREF function and return to the Primary Option Menu.

EDIT XREF Segment List

When you press Enter on the Segment/Layout XREF Dataset Specification screen, the EDIT XREF Segment List screen is displayed. This screen is used to associate segment layouts with the various segment types in a DBD.

Figure 9-2. EDIT XREF Segment List Screen

```
EDIT XREF - CW.FISAMP.XREFC (PORDR)------------------------------ ENTRY  00001
COMMAND ===>                                                    SCROLL ===> CSR

Description ===> PHYSICAL ORDER DBD
Line  Data             COBOL         Segment        Starting COBOL Data-name
Cmd   Base   Segment   Member      Description    (Blank for entire COBOL MBR)
--- -------- -------- ---------- --------------- ------------------------------
    PORDR    ORDR010  ORDR010    ORDER ROOT
             ORDR020  *MULT-RTV* ORDER LINE
             ORDR030  ORDR030    ORDER ITEM
             ORDR040  ORDR040    ORDER SCRAP
             ORDR050  *LCHILD*   ORDR-CUST LCHLD
                             ***  END OF SEGMENT LIST  ***









To specify record type values, enter "*" for member name and enter "S" line cmd
To specify concatenated/lchild segment information, enter "S" line cmd

Enter "DELETE/INSERT dbd-name" to delete/add a DBD from/to the seg/layout XREF
```

Description

Enter up to a 30-character description of the XREF. The description is displayed whenever an XREF member list is used.

Line Cmd

Enter a line command. Line commands are used to insert and delete segment entries from a DBD in the XREF. The S line command is used to select logical child and concatenated segments and segments with multiple formats so that segment layout information can be specified for these types of segments.

I (Insert) Line Command

Adds a segment entry immediately following the entry where the command is entered. Once the entry is inserted, you must specify a segment name and corresponding segment layout member. Only one insert line command can be entered per interaction. The insert line command cannot be entered with a select line command.

D (Delete) Line Command

Deletes a segment entry from a DBD in the XREF. Any number of delete line commands can be entered simultaneously with or without an occurrence of one of the other line commands.

S (Select) Line Command

Select logical child and concatenated segments and segments with multiple formats for editing. The select line command is valid only for these types of segments. Logical child and concatenated segments are automatically identified by displaying *LCHILD* and *CONCAT* in the Member field. Segments with multiple formats are identified by entering an * or *MULT-RTV* in the Member field. When you select one of these types of segments, the appropriate screen is displayed to enable you to enter the segment layout information.

The S line command cannot be entered with the insert command, and only one S line command can be entered per interaction.

Data Base

Displays the DBD member name and is protected and not modifiable. The DBD member name is displayed next to the first segment name within each DBD and, if you scroll the Segment List screen, next to the segment name displayed on the first screen body line.

Segment

Displays the segment name of each segment defined in a DBD. The segment names can be typed over.

Member

Enter either a member name or an asterisk. The most common entry is the member name within your segment layout library that contains the segment layout defining the segment data. If a segment type has multiple formats that require more than one segment layout to define them, enter an asterisk or *MULT-RTV* in this field. You can then select that entry and proceed to the EDIT Record Type 1 screen on Figure 9-11 on page 9-12 where you can enter the multiple segment layout member names.

Logical child and concatenated segments defined in a DBD are automatically identified when the DBD is added to the XREF. File-AID for IMS displays *LCHILD* or *CONCAT* in the Member field. For these types of segments, the Member field is protected and not modifiable. How to specify segment layout information for logical child and concatenated segments is described in "Logical Child Segment" on page 9-8.

If the layout which defines a segment is hard-coded in a COBOL or PL/I program, enter the program name in the Member field and specify a starting data-name.

This field's heading is displayed with either COBOL or PL/I preceding the word MEMBER depending on your current language mode.

Segment Description

Enter a 15-character description for each segment type. If entered, the description is displayed in the heading lines on the Formatted and Unformatted Browse/Edit screens.

Starting Data-Name

Enter a starting data-name within the COBOL or PL/I member to isolate the appropriate segment layout. This action is required only if multiple segment layouts are contained within a single segment layout library member or if a segment layout is hard-coded in a COBOL or PL/I program. The starting data-name must not contain imbedded blanks, but it is not otherwise validated against the segment layout until you use the segment/layout XREF in another File-AID for IMS function. File-AID for IMS reads the layout (or program) beginning with the starting data-name and stops reading when a data-name item with a numerically equal or lower level number is encountered or when the end of the layout is reached.

Primary Commands

Refer to Chapter 11, "Primary Commands" for an explanation of the primary commands available.

Segment/Layout Cross-Reference Examples

Adding a DBD to an XREF

Before you can browse or edit a database in formatted mode or edit and apply formatted field selection criteria in another File-AID for IMS function, you need to add the DBD that defines that database to a segment/layout XREF. Once the DBD is added to the XREF and the segment layout names are entered for each segment in the DBD, there is no need

to edit the XREF again unless there are subsequent DBD or segment layout member name changes.

If you are adding a DBD, you must enter a Y in the Use DBDLIB datasets for addition field on the Segment/Layout XREF Dataset Specification screen. You must also enter the DBDLIB dataset name that contains the DBD you want to add.

Use the INSERT primary command to add DBDs to the XREF member. In Figure 9-3, the INSERT command is used to add the PPART DBD to the PORDR XREF member.

Figure 9-3. Edit XREF Segment List Screen - Before Inserting a New DBD

```
EDIT XREF - CW.FISAMP.XREF(PORDR) -------------------------------- ENTRY  00001
COMMAND ===> INSERT PPART                                     SCROLL ===> CUR
Description ===> CUST AND ORDER D.B. XREFS
Line  Data             COBOL         Segment        Starting COBOL Data-name
Cmd   Base   Segment   Member      Description    (Blank for entire COBOL MBR)
--- -------- -------- ---------- --------------- ------------------------------
    PCUST    CUST010  CUST010    CUSTOMER ROOT
             CUST020  CUST020    CUST SHIPMENT
             VORDR050 *LCHILD*   VIRTUAL ORDR050
    PORDR    ORDR010  ORDR010    ORDER ROOT
             ORDR020  *MULT-RTV* ORDER LINE
             ORDR040  ORDR040    ORDER SCRAP
             ORDR050  *LCHILD*   ORDR-CUST LCHLD
                             ***  END OF SEGMENT LIST  ***



To specify record type values, enter "*" for member name and enter "S" line cmd
To specify concatenated/lchild segment information, enter "S" line cmd
Enter "DELETE/INSERT dbd-name" to delete/add a DBD from/to the seg/layout XREF
```

The result of the INSERT command is shown in Figure 9-4. The DBD was added in alphabetical order by DBD name and the Segment List screen scrolled to the inserted DBD.

An informational message (I615) is displayed when an INSERT command is used. Refer to the description of the INSERT command in Chapter 11, “Primary Commands”.

Figure 9-4. Edit XREF Segment List Screen - After Inserting a New DBD

```
EDIT XREF - CW.FISAMP.XREF(PORDR) ------------------------------- ENTRY  00001
COMMAND ===>                                                   SCROLL ===> CUR

Description ===> CUST AND ORDER D.B. XREFS
Line  Data            COBOL         Segment        Starting COBOL Data-name
Cmd   Base   Segment   Member      Description    (Blank for entire COBOL MBR)
--- -------- -------- ---------- --------------- ------------------------------
    PPART    PART010  PART010
             PART020  PART020
                            ***  END OF SEGMENT LIST  ***









To specify record type values, enter "*" for member name and enter "S" line cmd
To specify concatenated/lchild segment information, enter "S" line cmd

Enter "DELETE/INSERT dbd-name" to delete/add a DBD from/to the seg/layout XREF
```

The segment names defined in the PPART DBD are prefilled in the Segment field. For concatenated and logical child segments and segments with multiple formats, you must select the segment and proceed to the appropriate screen to specify segment layout information, otherwise, the segment name defined in the DBD is prefilled in the Member field.

Maintaining a DBD in an XREF

You may be required to change an XREF after a DBD has been added to it. Maintenance to a DBD within an XREF is necessary if segment names change or if segments are added to or deleted from the DBD. Also, segment layout member names can change, which will require maintenance to the Member field.

Note: Changes made to a DBD within an XREF have no affect on the DBD load module member. Also, maintenance to an XREF is not validated against the DBD member until it is used in another File-AID for IMS function. If changes occur in a DBD, it is recommended that you change your DBD source and perform a DBDGEN and then change the XREF member to reflect the changes made to the DBD.

In Figure 9-5, the PORDR and PPART DBDs within the XREF will change. Segment ORDR040 will be deleted and a new segment entry will be inserted immediately below the PART020 segment.

Figure 9-5. Edit XREF Segment List Screen - Before Changing an XREF

```
EDIT XREF - CW.FISAMP.XREF(PORDR) ------------------------------- ENTRY  00001
COMMAND ===>                                                    SCROLL ===> CUR

Description ===> CUST AND ORDER D.B. XREFS
Line  Data             COBOL         Segment        Starting COBOL Data-name
Cmd   Base   Segment   Member      Description    (Blank for entire COBOL MBR)
--- -------- -------- ---------- --------------- ------------------------------
    PCUST    CUST010  CUST010    CUSTOMER ROOT
             CUST020  CUST020    CUST SHIPMENT
             VORDR050 *LCHILD*   VIRTUAL ORDR050
    PORDR    ORDR010  ORDR010    ORDER ROOT
             ORDR020  *MULT-RTV* ORDER LINE
D            ORDR040  ORDR040    ORDER SCRAP
             ORDR050  *LCHILD*   ORDR-CUST LCHLD
    PPART    PART010  PART010    PART ROOT
I            PART020  PART020    PART LOCATION
                            ***  END OF SEGMENT LIST  ***



To specify record type values, enter "*" for member name and enter "S" line cmd
To specify concatenated/lchild segment information, enter "S" line cmd

Enter "DELETE/INSERT dbd-name" to delete/add a DBD from/to the seg/layout XREF
```

Figure 9-6 shows the result of the D and I line commands. The ORDR040 segment was removed and a blank entry was added below the PART020 segment. The segment name and corresponding segment layout member must now be specified for the inserted entry.

Figure 9-6. Edit XREF Segment List Screen - After Changing an XREF

```
EDIT XREF - CW.FISAMP.XREF(PORDR) ------------------------------- ENTRY  00001
COMMAND ===>                                                    SCROLL ===> CUR


Description ===> CUST AND ORDER D.B. XREFS
Line  Data             COBOL         Segment        Starting COBOL Data-name
Cmd   Base   Segment   Member      Description    (Blank for entire COBOL MBR)
--- -------- -------- ---------- --------------- ------------------------------
    PCUST    CUST010  CUST010    CUSTOMER ROOT
             CUST020  CUST020    CUST SHIPMENT
             VORDR050 *LCHILD*   VIRTUAL ORDR050
    PORDR    ORDR010  ORDR010    ORDER ROOT
             ORDR020  *MULT-RTV* ORDER LINE
             ORDR050  *LCHILD*   ORDR-CUST LCHLD
    PPART    PART010  PART010    PART ROOT
             PART020  PART020    PART LOCATION

                            ***  END OF SEGMENT LIST  ***



To specify record type values, enter "*" for member name and enter "S" line cmd
To specify concatenated/lchild segment information, enter "S" line cmd

Enter "DELETE/INSERT dbd-name" to delete/add a DBD from/to the seg/layout XREF
```

Note: You cannot add a logical child or concatenated segment by using the I line command. If a logical child or concatenated segment has been added to the DBD, you must delete the existing DBD and use the INSERT primary command to reinsert the DBD.

Terminating the Screen

Do one of the following to terminate the EDIT XREF Segment List screen:

- Enter the END or RETURN command to terminate the XREF edit session. A save operation is performed.
- Enter the CANCEL command to terminate the XREF edit session. A save operation is not performed.
- Press Enter to proceed to the next EDIT XREF Segment List screen.
  - If you selected a logical child segment, the Segment List screen (Figure 9-7) is displayed.
  - If you selected a concatenated segment, the Segment List screen (Figure 9-9) is displayed.
  - If you entered an * or *MULT-RTV* in the Member field, the Edit Record Type 1 screen (Figure 9-11) is displayed.

Logical Child Segment

When you select a logical child segment entry on the EDIT XREF Segment List screen, the EDIT XREF Logical Child Segment screen is displayed.

A logical child segment consists of the following parts:

- Destination Parent Concatenated Key (DPCK)
- Logical child data

The EDIT XREF Logical Child Segment screen is used to specify the segment layout information that defines these parts. This screen also provides the flexibility to have the segment layout define the DPCK portion of the logical child segment.

Figure 9-7. EDIT XREF Logical Child Segment Screen

```
EDIT XREF - CW.FISAMP.XREFC(PORDR) -------------------------------------------
COMMAND ===>
DATA BASE: PORDR    SEGMENT: ORDRCUST

Specify COBOL information for Logical Child segment:

----------------- Destination Parent Concatenated Key (DPCK) ------------------
  DPCK included in the first COBOL MBR below ===> N  (Y = Yes; N = No)
       If no, specify the length of the DPCK ===> 8


------------------- COBOL Member - Defines LCHILD Segment Data ----------------
  Specify COBOL MBR  ===> ORDR050     (Blank if LCHILD is KEY-ONLY)
  Starting Data-name ===>                                (Blank for entire mbr)




Note - There are 2 portions to a Concatenated segment:
   1.  Destination Parent Concatenated Key (Total DPCK Key Length = 8)
   2.  Logical Child Data                  DBD: PORDR  Segment: ORDR050

Enter END command to return to the Segment/Layout XREF Segment List screen
```

Destination Parent Concatenated Key

Indicate whether the DPCK is included in the segment layout that defines the logical child data. If the DPCK is not included in the segment layout, enter N and the length of the DPCK. File-AID for IMS/ISPF calculates the total length of the DPCK and prefills this field upon entry to this screen. The total DPCK length is calculated and displayed on the bottom of the screen. Below the DPCK length are the DBD and segment name of the logical child segment as defined in its physical DBD. You can type over the DPCK length if the segment layout defines part of the total DPCK.

When the DPCK is not included in the layout, a segment layout entry is generated that describes the DPCK when the logical child segment is displayed in formatted mode. If the logical child segment is variable length and the DPCK is not included in the segment layout, a two-byte data-name is generated for the Segment Size field in addition to the DPCK portion of the layout.

If the DPCK is included in your segment layout, enter a Y in the DPCK field. If you enter a Y in this field, the DPCK length is ignored. The default value is N upon initial entry to this screen.

LCHILD Segment Data

Enter the segment layout member name that defines the logical child data in the Member field. If multiple segment layouts are contained within a single segment layout member, you can specify a starting data-name within the member to isolate the appropriate layout. Refer to page 9-4 for more details on the starting data-name option.

Terminating the Screen

Do one of the following to terminate the EDIT XREF Logical Child Segment screen:

- Enter the END command to return to the EDIT XREF Segment List screen.
- Enter the RETURN command to terminate the XREF edit session. A save operation is performed.
- Enter the CANCEL command to terminate the XREF edit session. A save operation is not performed.
- Enter the SAVE command to write the segment/layout XREF information back to the same dataset from which it was read.

Figure 9-8. Formatted Display of Logical Child Segment Screen

```
EDIT - CW.FISAMP.ORDER1 ---------------------------- (DBD-PORDR   )- LINE 00001
COMMAND ===>                                                 SCROLL ===> CSR
PARENT   ORDR010
SEGMENT  ORDR050   CONCATENATED KEY: AA2222,01
--------LEVEL NUMBER/DATA-NAME--------- -FORMAT- ---------FIELD VALUE----------
01  LCHILD-SEGMENT
  02  DESTINATION-PARENT-KEY            C   8    CN000101
------------------------------------- -------- ------------------------------
  02  ORDER-SHIPMENT-DATA
    06  ORDER-SHIPMENT-KEY
      08  LOCATION-NUMBER               Z   2  K 01
    06  SCHEDULED-SHIPPING-QUANTITY     PS  8  2 22.00
    06  ACTUAL-SHIPPING-QUANTITY        PS  8  2 21.00
    06  SCHEDULED-SHIPPING-DATE         C   8    19881012
    06  ACTUAL-SHIPPING-DATE            C   8
    06  PACKAGE-INDICATOR               C   2    RD
    06  SHIPMENT-CODE                   Z   1    8
    06  SHIPMENT-COST                   P   8  2 400.00
*** END OF LAYOUT. LENGTH =    47 ***


ENTER UNFMT TO SWITCH TO UNFORMATTED MODE, CHAR TO SWITCH TO CHARACTER MODE
```

Figure 9-8 shows the logical child segment in edit formatted mode based on the entries on the EDIT XREF Logical Child Segment screen Figure 9-7. Notice that File-AID for IMS/ISPF generates the DPCK and separates it from the logical child data with a dashed line. If the segment layout includes the DPCK, a dashed line is not displayed.

Concatenated Segment

When you select a concatenated segment entry on the EDIT XREF Segment List screen, the EDIT XREF Concatenated Segment screen is displayed.

A concatenated segment consists of the following parts:

- Destination Parent Concatenated Key (DPCK)
- Logical child data
- Destination parent data

The EDIT XREF Concatenated Segment screen is used to specify the segment layout information defining these parts. This screen provides the flexibility to have your segment layouts define the DPCK portion of the concatenated segment.

Figure 9-9. Edit XREF Concatenated Segment Screen

```
EDIT XREF - CW.FISAMP.XREFC(LORDR)--------------------------------------------
COMMAND ===>
DATA BASE: LORDR    SEGMENT: ORDRCUST

Specify COBOL information for Concatenated segment:

----------------- Destination Parent Concatenated Key (DPCK) ------------------
  DPCK included in the first COBOL MBR below ===> N  (Y = Yes; N = No)
       If no, specify the length of the DPCK ===> 8

------ First COBOL Member - Defines LCHILD or Concatenated Segment Data -------
  Specify COBOL MBR  ===> ORDR050     (Blank if LCHILD is KEY-ONLY)
  STARTING DATA-NAME ===>                                (Blank for entire mbr)


------------ Second COBOL Member - Defines Destination Parent Data ------------
  Specify COBOL MBR  ===> CUST020     (Blank if DEST. PARENT is KEY-ONLY)
  Starting data-name ===>                                (Blank for entire mbr)


Note - There are 3 portions to a Concatenated segment:
   1.  Destination Parent Concatenated Key (Total DPCK Key Length = 8)
   2.  Logical Child Data              Data base: PORDR     Segment: ORDR050
   3.  Destination Parent Data         Data base: PCUST     Segment: CUST020

Enter END command to return to the Segment/Layout XREF Segment List screen
```

Destination Parent Concatenated Key (DPCK)

Indicate whether the DPCK is included in the segment layout that defines the logical child or concatenated segment data. If the DPCK is not included in the segment layout, enter N and the length of the DPCK. File-AID for IMS/ISPF calculates the total length of the DPCK and prefills this field upon initial entry to this screen. The length is displayed at the bottom of the screen. Below the DPCK length are the DBD and segment name of the logical child segment as defined in its physical DBD. You can type over the DPCK length if the segment layout defines part of the total DPCK.

When the DPCK is not included in the layout, a segment layout entry is generated that describes the DPCK when the concatenated segment is displayed in formatted mode.

If the DPCK is included in your segment layout, enter a Y in the DPCK field. If you enter a Y in this field, the DPCK length is ignored. The default value is N upon initial entry to this screen.

Defines LCHILD or Concatenated Segment Data

In the first Specify Member field, enter the segment layout member name that defines the logical child data only or one that defines the entire concatenated segment data, including the logical child and destination parent data. This function

provides the option of using one or two segment layouts to define a concatenated segment.

If the logical child portion of the concatenated segment is defined in the logical DBD as having key-only sensitivity, then IMS does not place the data portion of the segment in the I/O area. In this situation, leave the first Specify Member field blank.

If multiple segment layouts are contained within a single segment layout member, you can specify a starting data-name within the member to isolate the appropriate layout. Refer to page 9-13 for details about the starting data-name option.

Defines Destination Parent Data

In the second Specify Member field, enter the segment layout member name that defines the destination parent data. Leave this member name blank if the member entered in the first Specify Member field defines the entire concatenated segment or if the destination parent is defined in the logical DBD as having key-only sensitivity.

The starting data-name feature can also be used for the Destination Parent segment layout member.

Figure 9-10 shows the concatenated segment in formatted mode based on the entries specified on the EDIT XREF Concatenated Segment screen Figure 9-9.

Figure 9-10. Formatted Display of Concatenated Segment

```
EDIT - CW.FISAMP.ORDER1 ---------------------------- (DBD-LORDR   )- LINE 00001
COMMAND ===>                                                 SCROLL ===> CSR
PARENT   ORDR010
SEGMENT  ORDRCUST  CONCATENATED KEY: AA2222,01
--------LEVEL NUMBER/DATA-NAME--------- -FORMAT- ---------FIELD VALUE----------
01  LOGICAL-CHILD-INFORMATION
  05  DESTINATION-PARENT-CONCAT-KEY
    07  CUSTOMER-NUMBER                C   6    CN00001
    07  LOCATION-NUMBER                Z   2    01
  05  LOGICAL-CHILD-SHIPPING-INFO
    07  LOCATION-NUMBER                Z   2  K 01
    07  SCHEDULED-SHIPPING-QUANTITY    PS  8  2 22.00
    07  ACTUAL SHIPPING QUANTITY       PS  8  2 21.00
    07  SCHEDULED-SHIPPING-DATE        C   8    19881012
    07  ACTUAL-SHIPPING-DATE           C   8
    07  PACKAGE-INDICATOR              C   2    RD
    07  SHIPMENT-CODE                  Z   1    8
    07  SHIPMENT-COST                  P   8  2 400.00
------------------------------------- -------- ------------------------------
01  CUSTOMER-SHIPMENT-DATA
    05  CUSTOMER-SHIPMENT-KEY
      07  LOCATION-NUMBER              Z   2    01
    05  SHIPPING-ADDRESS
ENTER UNFMT TO SWITCH TO UNFORMATTED MODE, CHAR TO SWITCH TO CHARACTER MODE
```

Notice that there is not a dashed line separating the DPCK from the logical child data. This is because the EDIT XREF Concatenated Segment screen Figure 9-9 indicated that the DPCK was included in the COBOL layout. If one COBOL layout was used to define the entire concatenated segment and the layout included the DPCK, dashed lines do not appear.

Terminating the Screen

Do one of the following to terminate the EDIT XREF Concatenated Segment screen:

- Enter the END command to return to the XREF Segment List screen.
- Enter the RETURN command to terminate the XREF edit session. A save operation is performed.
- Enter the CANCEL command to terminate the XREF edit session. A save operation is not performed.

- Enter a SAVE command to write the segment/layout XREF information back to the same dataset from which it was read.

Edit Record Type 1 Entries

When you enter an * or *MULT-RTV* in the Member field on the EDIT XREF Segment List screen and select that entry, the EDIT Record Type 1 screen is displayed.

This screen is used to specify segment layout information for segments with multiple formats. For this type of segment there are up to two fields within the segment that contain values that indicate the segment format. In File-AID for IMS/ISPF these values are called record type values. On the Edit Record Type 1 screen, you enter all possible record type values that can appear in the segment's Record Type Value 1 field.[1]

Figure 9-11. Edit Record Type 1 Screen

```
EDIT Record Type 1 - CW.FISAMP.XREFC(PORDR)------------------------- ENTRY  001
COMMAND ===>                                                  SCROLL ===> CSR

       Data base: PORDR    Segment: ORDR020    ORDER LINE
       Specify record type 1:
            Position ===> 5
            Length   ===> 2   (1-16)

"D" - Delete    Record Type       COBOL                Comments
"S" - Select      Value 1         Member    or Starting Dataname (IND = Y)  IND
------------  ----------------  ----------  ------------------------------  ---
              PO                ORDR020     PURCHASE ORDER LAYOUT            N
              SC                ORDR021     SUB-CONTRACT ORDER LAYOUT        N
              WO                *MULT-RTV*                                   N
              *OTHER*           ORDR022     *OTHER RCD TYPE VALUE 1*         N




To specify RECORD TYPE VALUE 2's for one of the above entries, enter "*"
in the COBOL MEMBER column and select that entry

Enter END command to return to the Segment/Layout XREF Segment List screen
```

Position

Enter the starting position within the segment of the field that identifies the segment format (Record Type Value 1 field).

Length

Enter the length of the Record Type Value 1 field. The length of the Record Type Value 1 field can range from 1 to 16.

Delete/Select

Enter D to delete a record type value 1 entry or S to select a record type value 1 for which you want to specify record type value 2 values. You cannot delete an entry by entering blanks in each field.

Enter S to proceed to the Edit Record Type 2 screen (Figure 9-13) to specify the record type value 2 values for a given record type value 1. When you select a record type value 1 for record type 2 processing and then return to the Edit Record Type 1 screen, the entry selected is displayed at the top of the screen body.

Record Type Value 1

Enter one of the following:

1. For Double-Byte Character Set (DBCS) support, the primary commands DBCS and MIXED are allowed to change the format of the Record Type Value 1 and 2 fields. Refer to "Double-Byte Character Support" on page 2-4.

- The specific values that appear in the Record Type Value 1 field.
- The literal *OTHER* if multiple record type value 1s are associated with one segment layout or have the same Record Type Value 2 field. A pre-formatted *OTHER* entry is automatically inserted as the last record type value 1 if one was not previously specified. This entry is for your convenience only and can be ignored if not needed.

You need not enter record type values in any particular sequence. When you enter the SAVE command or return to the XREF Segment List screen, the values are sorted in ascending sequence (except for the *OTHER* entry which remains last). Each record type value 1 must be unique. You can enter a maximum of 256 record type value 1s for a given segment type.

Member

Enter one of the following:

- The member name of the layout in the segment layout library that defines the segment format associated with the given record type value 1.
- An * or *MULT-RTV* if the format of the segment depends on a second field in the segment. Then select that entry and enter the record type value 2 information as described in “Edit Record Type 2 Screen” on page 9-14.

Comments or Starting Dataname

Enter a 30-character description for each record type value 1 or a starting data-name within the segment layout member. For pre-formatted *OTHER* entries, this field contains a default comment of "*OTHER RCD TYPE VALUE 1*."

If multiple segment layouts are contained within a single segment layout member, you can specify a starting data-name to isolate the appropriate layout. The starting data-name must not contain imbedded blanks, but it is not otherwise validated against the segment layout until you use the segment/layout XREF in another function. File-AID for IMS/ISPF reads the layout from the segment layout member beginning with the starting data-name and stops reading when a data-name item with a numerically equal or lower level number is encountered or when the end of the layout is reached.

IND

Indicate whether you entered a comment or a starting data-name in the Comments or Starting Dataname field. Enter N or leave blank to indicate that the field contains comments. Enter Y to indicate that the field contains a starting data-name. The default is N.

Hexadecimal Format

If you want to enter record type values with non-displayable characters (for example, if the record type field is in packed decimal or binary format) you must use hexadecimal format. To switch between Character and HEX formats, use the HEX command.

HEX ON switches you to HEX format and HEX OFF switches you to Character format. In HEX format the record type values are shown in 3-line HEX format as shown in Figure 9-12. You can type over the Character or the HEX lines.

Figure 9-12. EDIT Record Type 1 Screen - Hex Format

```
EDIT Record Type 1 - CW.FISAMP.XREFC(PORDR) ------------------------ ENTRY  001
COMMAND ===>                                                   SCROLL ===> CSR

       Data base: PORDR    Segment: ORDR020    ORDER LINE
       Specify record type 1:
            Position ===> 5
            Length   ===> 2   (1-16)

"D" - Delete    Record Type       COBOL                Comments
"S" - Select      Value 1         Member    or Starting Dataname (IND = Y)  IND
------------  ----------------  ----------  ------------------------------  ---
              PO                ORDR020     PURCHASE ORDER LAYOUT            N
              DD
              76

              SC                ORDR021     SUB-CONTRACT ORDER LAYOUT        N
              EC
              23

To specify RCD TYPE VALUE 2's for one of the above entries, enter "*"
in the COBOL Member column and select that entry
Enter END command to return to the Segment/Layout XREF Segment List screen
```

Terminating the Screen

Do one of the following to terminate the EDIT Record Type 1 screen:

- Enter the SAVE command to write the segment/layout XREF information back to the same dataset from which it was read. If there is any unspecified segment layout information for segments with multiple formats or logical child or concatenated segments, the save operation returns you to the EDIT XREF Segment List screen and prompts you to enter any unspecified information.
- Enter the END command to return to the EDIT XREF Segment List screen.
- Enter the RETURN command to return to the Primary Option Menu. A save operation is performed.
- Enter the CANCEL command to terminate the XREF member edit session. A save operation is not performed.

Edit Record Type 2 Screen

When you enter an S in the Delete/Select field on the EDIT Record Type 1 screen, the EDIT Record Type 2 screen is displayed. This screen is used to specify values for the second record type value field associated with the given value of the first record type field.[1]

1. For Double-Byte Character Set (DBCS) support, the primary commands DBCS and MIXED are allowed to change the format of the Record Type Value 1 and 2 fields. Refer to “Double-Byte Character Support” on page 2-4.

Figure 9-13. EDIT XREF Record Type 2 Screen

```
EDIT Record Type 2 - CW.FISAMP.XREFC(PORDR) --------- DELETE INDICATOR INVALID
COMMAND ===>                                                  SCROLL ===> CSR

       Data base: PORDR    Segment: ORDR020    ORDER LINE
       Specify record type 2:           Record type value 1: *OTHER*
            Position ===> 58
            Length   ===> 2   (1-16)

                Record Type       COBOL                Comments
"D" - Delete      Value 2         Member    or Starting Dataname (IND = Y)  IND
------------  ----------------  ----------  ------------------------------  ---
              *OTHER*                       *OTHER RCD TYPE VALUE 2*         N
```

Position

Enter the starting position in the segment of the second field used to identify the segment format. This field need not be contiguous to the first record type field.

Length

Enter the length of the second record type value field. The length of the record type value 2 field can range from 1 to 16.

Delete

Enter D in this field to delete record type 2 entries. You cannot delete an entry by entering blanks in each field.

Record Type Value 2

Enter one of the following:

- The specific values that can appear in the Record Type Value 2 field.
- The literal *OTHER* if multiple record type value 2s are associated with one segment layout. A pre-formatted *OTHER* entry is automatically inserted as the last record type value 2 if one was not previously specified. This entry is for your convenience only and can be ignored if not needed.

You need not enter record type values in any particular sequence. When you enter the SAVE command or return to the EDIT Record Type 1 screen, the values are sorted in ascending sequence (except for the *OTHER* entry that remains last). Each record type value 2 must be unique. You can enter a maximum of 256 record type value 2s per record type value 1.

Member

Enter the member name of the layout in the segment layout library that corresponds to the record type value 1 and 2 combination.

Comments or Starting Dataname

Enter a 30-character description for each record type or a starting data-name within the segment layout member. For pre-formatted *OTHER* entries, this field contains a default comment of "*OTHER RCD TYPE VALUE 2*." Refer to page 9-13 for a detailed description of the starting data-name feature.

IND

Indicate whether you entered a comment or a starting data-name in the Comments or Starting Dataname field. Enter N or leave blank to indicate that the field contains comments. Enter Y to indicate that the field contains a starting data-name. The default value is N.

Hexadecimal Format

If you want to enter record 2 type values with non-displayable characters, you must use hexadecimal format. To switch between character and HEX formats, use the HEX command. HEX ON switches to HEX format and HEX OFF switches to character format. In HEX format the record type values are shown in 3-line HEX format. You can type over character or HEX lines.

Terminating the Screen

Do the following to terminate the EDIT Record Type 2 screen:

- Enter a SAVE command to write the segment/layout XREF information back to the same dataset from which it was read. If there is any unspecified segment layout information, the save operation returns you to the EDIT XREF Segment List or EDIT Record Type 1 screen and prompts you to enter any unspecified information.
- Enter the END command to return to the EDIT Record Type 1 screen.
- Enter the RETURN command to return to the Primary Option Menu. A save operation is performed.
- Enter the CANCEL command to terminate the XREF edit session. A save operation is not performed.

Chapter 10. Application Relationships

Option 9, Relationship, is used to create and maintain application relationships for use in the Extract/Load and Selection Criteria functions of File-AID for IMS/ISPF.

An application relationship is a File-AID for IMS/ISPF-defined relationship between one segment and the root segment of another database. The segment that contains the keys of the root segment is called the source segment in the source DBD, while the root segment is called the target segment in the target DBD.

Application Relationship Dataset Specification

The Application Relationship - Dataset Specification screen is displayed when you select Option 9 on the Primary Option Menu.

Figure 10-1. Application Relationship - Dataset Specification Screen

```
File-AID for IMS -  Application Relationship - Dataset Specification  ---------
COMMAND ===>

ENV: DEV1 - DEVELOPMENT ENVIRONMENT WITH CONCATENATIONS

Enter dataset name of application relationship to be edited:

+ Appl Relationship dataset  . . 'XXXXXXX.FISAMP.APPLREL'
                      Member  . .          (Must be a DBD name in the DBDLIB or
                                            Blank or pattern for member list)

--------------------------------------------------------------------------------

Enter DBD dataset name to which application relationship will be defined:

         + DBDLIB dataset 1  . . 'XXXXXXX.FISAMP.DBDLIB'
                  Dataset 2  . .
```

Note: The presence of a highlighted plus (+) or minus (-) sign indicates dataset concatenations. Refer to “Dataset Concatenation Support” on page 3-1 for additional information.

Appl Relationship dataset and member

The application relationship dataset name and member name that you enter must conform to the characteristics of a valid application relationship dataset as described in “Application Relationship Dataset Concatenation” on page 3-6. When specifying a member name, the member name must be a DBD name in the DBDLIB dataset specified in the next section of the screen. This DBD name is the source DBD that the application relationship is based on.

DBDLIB dataset 1 and dataset 2

You can enter two DBDLIB datasets to serve as the concatenated source. If you enter two DBD load library names and their blocksizes are different, you must enter the library with the larger blocksize on the first dataset name line. When two DBD libraries are entered, File-AID for IMS/ISPF searches the first library before the second when looking for the DBD member. If you specify only one DBD library, it can be entered on either DBDLIB DATASET line.

Terminating the Screen

Do one of the following to terminate the Application Relationship Dataset Specification screen:

- Press ENTER to proceed to the Application Relationship Segment List screen (Figure 10-3 on page 10-4). (If errors are encountered during the validation process, Figure 10-2 displays.)
- Enter the END command to terminate editing and return to the Primary Option Menu.

Error Summary

If you are editing an application relationship that was previously created in Option 9, the application relationship dataset is validated after you press ENTER from the Application Relationship Dataset Specification screen. If errors are encountered in the validation process, the Application Relationship Error Summary screen is displayed. If no errors are encountered, this screen is skipped.

Figure 10-2. Application Relationship Error Summary Screen

```
-------------------  Application Relationship Error Summary  ------------------
COMMAND ===>

001 INVALID OR MISSING RECORD - SKIPPED TO NEXT VALID SOURCE SEGMENT
005 THE NUMBER OF KEYS FOR TGT (PCUST   ) DOES NOT MATCH THE EXPECTED TOTAL
004 THE NUMBER OF TARGETS FOR SEG (ORDR040 ) DOES NOT MATCH THE EXPECTED TOTAL



Enter END command to terminate Application Relationship Edit without saving
Enter FORWARD command to proceed to Edit Application Relationships
```

Errors can occur in the validation process for either of the following reasons:

- Incorrect DBD libraries were entered on the Application Relationship Dataset Specification screen.
- The application relationship was modified outside Option 9 (for example, in ISPF/PDF Option 2).

There are six different errors that can occur in the validation process. The text and a description of each message follows:

Table 10-1. Application Relationship - Validation Errors

Error	Description
001	INVALID OR MISSING RECORD - SKIPPED TO NEXT VALID SOURCE This error occurs when File-AID for IMS encounters an invalid record or determines that a record is missing from the application relationship dataset. This can occur only when the application relationship was modified outside Option 9. File-AID for IMS attempts to skip to the next valid application relationship record.
002	SEG (seg-name) NOT FOUND IN DBD (DBD-name) - SKIPPED TO NEXT VALID SEG This error occurs when the segment name was not found in the DBD defined in the specified DBD library. File-AID for IMS discards the application relationship for the segment identified by seg-name in the message.
003	THE NUMBER OF SEGS IN THE APPL REL MBR DOES NOT MATCH THE EXPECTED TOTAL This error occurs when File-AID for IMS encounters a mismatch between the number of source segments defined in the application relationship and the number of segments in the DBD defined in the DBD library. This can occur when an incorrect DBD library was specified or when the application relationship was modified outside Option 9.
004	THE NUMBER OF TARGETS FOR SEG (seg-name) DOES NOT MATCH THE EXPECTED TOTAL This error occurs when File-AID for IMS encounters a mismatch between the number of target DBDs for the seg-name actually found in the application relationship and the expected count contained in the application relationship. This can occur only when the application relationship was modified outside Option 9.
005	THE NUMBER OF KEYS FOR TGT (DBD-name) DOES NOT MATCH THE EXPECTED TOTAL This error occurs when File-AID for IMS encounters a mismatch between the actual number of keys defined for the DBD-name target DBD in the application relationship and the expected count contained in the application relationship. This can occur only when the application relationship was modified outside Option 9.
006	THE NUMBER OF TGTS IN THE APPL REL MBR DOES NOT MATCH THE EXPECTED TOTAL This error occurs when File-AID for IMS encounters a mismatch between the actual number of target DBDs defined in the application relationship and the expected count contained in the application relationship. This can occur only when the application relationship was modified outside Option 9.

Terminating the Screen

Do one of the following to terminate the Application Relationship Error Summary screen:

- Press ENTER to proceed with editing the application relationship despite the errors.
- Enter the END command to terminate editing and return to the Application Relationship - Dataset Specification screen.

Application Relationship Segment List

If there are no errors in the application relationship validation process or if there are errors and you pressed Enter on the Application Relationship Error Summary screen, the Application Relationship Segment List screen is displayed. This screen is used to select and delete application relationships for a source segment in the primary DBD.

Figure 10-3. Application Relationship Segment List Screen

```
Application Relationship - CW.FISAMP.APPLREL(PORDR)----------------- LINE  001
COMMAND ===>                                                   SCROLL ===> CSR

Description ===> A/R ORDER LINE - PART ROOT

Line Application               Source      Segment
 Cmd Relation -----Level-----  Segment     Length
  _           1 DBD-PORDR      ORDR010             167
  _      *      2              ORDR020        50:  200
  _              3             ORDR030              45
  _            2               ORDR040              40
  _            2               ORDR050              47  LCHILD SEG
                     ***  END  OF SEGMENT  LIST  ***









Enter "S" to specify source fields that construct target root key
Enter "D" to delete target DBD(s) from application relationship
```

Description

Enter up to a 30-character description of the application relationship. The description is displayed whenever an Application Relationship Member List screen is used.

Line Cmd

Enter one of the following:

S Selects a source segment type to create or maintain an application relationship. Only one S line command can be entered per interaction. When you select a source segment type, the Target DBD Specification screen (Figure 10-4) is displayed.

D Deletes all application relationships created for the source segment. Any number of D line commands can be entered simultaneously with or without an occurrence of a select line command.

Application Relation

A protected, non-modifiable field that displays an asterisk when an application relationship exists for the source segment.

Level

The segment type's hierarchical level number in the database (for the root segment type, the primary DBD name is displayed next to the level number).

Source Segment

The name of the source segment as specified in the DBD.

Segment Length

The segment length as specified in the DBD. For variable length segment types, both the minimum and maximum defined lengths are shown.

For additional information, File-AID for IMS identifies a logical child segment with "LCHILD SEG" displayed at the end of the segment line.

Terminating the Screen

Do one of the following to terminate the Application Relationship Segment List screen:

- Enter the END or RETURN command to terminate editing of the application relationship. A save operation is performed.
- Enter the CANCEL command to terminate editing of the application relationship. A save operation is not performed.

Primary Commands

Refer to Chapter 11, “Primary Commands” for an explanation of the primary commands available.

Target DBD Specification

When you enter an S line command from the Application Relationship Segment List screen, the Target DBD Specification screen is displayed. This screen is used to specify the target DBDs and fields in the source segment type that construct the target root keys.

Figure 10-4. Target DBD Specification Screen

```
Application Relationship - CW.FISAMP.APPLREL (PORDR) --------- Row 1 to 1 of 1
COMMAND ===>                                                  SCROLL ===> 7

Source data base name: PORDR     Segment name: ORDR020

Source segment exit name ===>          (Optional: To manipulate target key data)

                     ----------------------- Source fields --------------------
Line                  Start                Start                Start
 Cmd  Target DBD   Position 1  Length  Position 2  Length   Position 3  Length
 __    PPART___       14___       6__     _____       ___      _____       ___
****************************** Bottom of data ********************************
```

Start Position and Length

Starting in the Start Pos 1 field, specify up to three source fields and the order in which these source fields construct the root target key. File-AID for IMS uses the start position and length you specified to identify each source field.

Source Segment Exit Module

The source segment exit name you specify identifies an optional user-written module called during the extract process. The source segment exit module is called after the target key is constructed from the Source Segment fields. This exit module can manipulate the target key and include up to nine other target root keys to be extracted. The Application Relationship exit can be used for the following reasons:

- To convert a packed source field into a zoned target key.
- To add a constant prefix or suffix to the constructed target key.
- To add up to nine more target root keys to extract based on one source segment.
- To convert an encoded source key to a fully decoded target root key.
- To change the target key based on several fields in the source segment.
- To decide whether to chase this source's relationship based on data in this source segment.

Your source segment exit module can be written in COBOL, PL/I, or Assembler. The exit module can be compiled and linked into the same load library where File-AID for IMS resides. For an example of the exit module's compilation and linkage, see the person responsible for File-AID for IMS at your installation. A sample application relationship exit module and JCL are included on the File-AID for IMS installation tape. The following call sequence and parameters are used to interface with the source segment exit module:

CALL SEQUENCE

```
Call source segment exit module (SOURCE-SEGMENT-EXIT-PARMS,
                                 TARGET-ROOT-KEYS-TABLE,
                                 SOURCE-SEGMENT-DATA,
                                 CONCATENATED-KEY,
                                 AR-EXIT-WORK-AREA)
```

SOURCE-SEGMENT-EXIT-PARMS LAYOUT

```
01  SOURCE-SEG-EXIT-PARMS.
    03  INPUT-PARMS.
        05   SOURCE-DBD-NAME                  PIC X (8).
        05   SOURCE-SEGMENT-NAME              PIC X (8).
        05   SOURCE-SEGMENT-LENGTH            PIC S9(4) COMP.
        05   TARGET-DBD-NAME                  PIC X (8).
        05   TARGET-SEGMENT-NAME              PIC X (8).
        05   CONSTRUCTED-TARGET-KEY-LENGTH    PIC S9(4) COMP.
                                              (see below)
    03  INPUT-OUTPUT-PARMS.
        05   TARGET-NO-TO-EXTRACT             PIC S9(4) COMP.
                                              (see below)
    03  OUTPUT-PARMS.
        05     EXTRACT-ROOT-IND               PIC X.
                                              (see below)
        05     EXTRACT-CHANGED-SOURCE-SEG     PIC X.
                                              (see below)
```

CONSTRUCTED-TARGET-KEY-LENGTH is the sum of the lengths of the source fields that construct the target root key.

TARGET-NO-TO-EXTRACT is the number of target root keys that reside in the TARGET-ROOT-KEYS-TABLE. When calling the exit module, File-AID for IMS places the constructed target root key in the first entry of the TARGET-ROOT-KEYS-TABLE and sets this value to one. Upon return from the exit module, File-AID for IMS uses this value, (0-30), as the number of target keys in the TARGET-ROOT-KEYS-TABLE. If the value is zero, File-AID for IMS assumes there are no target root segments to be extracted.

EXTRACT-ROOT-IND (Y/N) indicates whether the application relationship for this source segment is to be extracted.

The EXTRACT-CHANGED-SOURCE-SEG (Y/N) indicates whether the extracted segment should be taken from the SOURCE-SEGMENT-DATA area. If N, the extracted segment is taken from the database. If Y, the segment is taken from the SOURCE-SEGMENT-DATA area instead. The default is N. This action allows the exit to modify the extracted segment. The area is refreshed from the database on each invocation of the exit. The segment is written to the extract dataset following the last invocation of the exit module. Therefore, if the exit is invoked multiple times for the same segment, the exit should set EXTRACT-CHANGED-SOURCE-SEG to Y and make all changes to the source segment only on the last invocation.

Note: If the segment is variable length, the length field should not be changed. Changes to the sequence field could cause out-of-sequence conditions on later use of the extracted data.

TARGET-ROOT-KEYS-TABLE LAYOUT

This layout contains up to ten target root keys. When the exit module is called, the first entry contains the constructed target root key based on the application relationship. The exit module can manipulate this key and add up to 29 more target root keys in this table to be extracted. The TARGET-NO-TO-EXTRACT contains the number of target root keys in the TARGET-ROOT-KEYS-TABLE.

```
01  TARGET-ROOT-KEYS-TABLE
    03  TARGET-ROOT-KEY OCCURS 30            PIC X(255).
```

SOURCE-SEGMENT-DATA LAYOUT

This layout is a 30720-byte field that contains the source segment being extracted. The exit module can manipulate the source segment in this area. Changes made here do not affect the source segment in the database. See the EXTRACT-CHANGED-SOURCE-SEG field in the SOURCE-SEG-EXIT-PARMS to find where the segment written to the extract dataset is obtained.

```
01  SOURCE-SEGMENT-DATA          PIC X(30720).
```

CONCATENATED-KEY LAYOUT

This layout is a 3825-byte area that contains the fully concatenated key of the source segment. The length of 3825-bytes allows for the maximum individual key length of 255 bytes multiplied by the maximum number of hierarchical database levels of 15. The layout of the concatenated key in the CONCATENATED-KEY field is identical to its layout in the key feedback area of a standard IMS PCB.

```
01  CONCATENATED-KEY             PIC X(3825).
```

AR-EXIT-WORK-AREA LAYOUT

This layout is a 4096-byte work area initialized to binary zeros. This area is unchanged by File-AID for IMS/ISPF during the entire extract and can be used to retain information across multiple calls to the application relationship exit.

```
01  AR-EXIT-WORK-AREA            PIC X(4096).
```

Example of Creating an Application Relationship

To create another application relationship to the PORDR database, select the appropriate source segment type on the Application Relationship Segment List screen. In Figure 10-5, the ORDR040 source segment type is selected to define an application relationship.

Figure 10-5. Creating an Application Relationship - Selecting a Segment Type

```
Application Relationship - CW.FISAMP.APPLREL(PORDR) ---------------- LINE  001
COMMAND ===>                                                  SCROLL ===> CSR

Description ===> A/R ORDER LINE - PART ROOT

Line Application               Source      Segment
 Cmd Relation -----Level-----  Segment     Length
  _          1 DBD-PORDR       ORDR010            167
  _     *     2                ORDR020        50:  200
  _            3               ORDR030              45
  S            2               ORDR040              40
  _            2               ORDR050              47  LCHILD SEG
                     ***  END  OF SEGMENT  LIST  ***









Enter "S" to specify source fields that construct target root key
Enter "D" to delete target DBD(s) from application relationship
```

When the ORDR040 segment type is selected, the Target DBD Specification screen is displayed. This screen is used to specify an optional source segment exit module, the target DBDs, and up to three source fields to construct the target's root key.

In Figure 10-6, PMATL is the target DBD with a key constructed from two source fields in ORDR040. The first source field starts in position 24 for a length of one. The second source field starts in position 11 for a length of five. Together, the two source fields construct a six-byte target root key to be used to extract PMATL's root.

Note: The order of the source fields when constructing the target root key is determined by their order in the Source Fields. When you enter the END command, the application relationship for ORDR040 is retained and you are returned to the Application Relationship Segment List screen.

Figure 10-6. Creating an Application Relationship - Specify Target Root Keys

```
Application Relationship - CW.FISAMP.APPLREL (PORDR) --------- Row 1 to 1 of 1
COMMAND ===>                                                   SCROLL ===> 7

Source data base name: PORDR     Segment name: ORDR040

Source segment exit name ===>          (Optional: To manipulate target key data)

                     ----------------------- Source fields --------------------
Line                  Start                Start                Start
 Cmd  Target DBD   Position 1  Length  Position 2  Length   Position 3  Length
 __    PMATL___       24___       1__     11___       5__      _____       ___
****************************** Bottom of data ********************************
```

Terminating the Screen

Do one of the following to terminate the Target DBD Specification screen:

- Enter the END or RETURN command to terminate editing of the application relationship. A save operation is performed.
- Enter the CANCEL command to terminate editing of the application relationship. A save operation is not performed.

Chapter 11.
Primary Commands

This chapter describes the primary commands available in File-AID for IMS/ISPF. Commands are listed alphabetically with syntax and techniques for using them.

Some primary commands have optional parameters, which are described in syntax diagrams. See “Reading the Syntax Diagrams” on page -xxii for directions on reading the syntax diagrams.

Commands processed identically in ISPF/PDF and File-AID for IMS are noted with an asterisk (*).

Several commands described below have repetition factors as valid operands. This condition is symbolized by the character n. Except where noted, n must be a positive integer value between 1 and 2,147,483,647.

ADM

The ADM command displays the File-AID for IMS Administration main menu if access to this function from the product panels has been enabled. This command terminates the current screen processing. When you exit the Administration menu, you’re returned to the File-AID for IMS Primary Option Menu, where you can select the desired option.

```
►►──ADM──────────────────────────────────────────────────────────────────►◄
```

CANCEL (Edit only)

The CANCEL command is used to restore the contents of the current segment to the way it was before you changed it. For example, if you make changes to different fields in the current segment and decide you want to restore the original contents of those fields, use the CANCEL command.

Any changes you make to the current segment can be cancelled provided you remain positioned on that segment occurrence. Changes to the current segment take effect as soon as you move to a different segment in the database.

The CANCEL command is especially useful if you change a key or non-replaceable field and need to recall the prior (valid) field contents.

There are no operands associated with the CANCEL command. The CANCEL command can be abbreviated to CAN.

```
►►──┬─CANCEL─┬──────────────────────────────────────────────────────────►◄
    └─C──────┘
```

*CAPS

The CAPS command controls the caps mode while in File-AID for IMS. If caps mode is ON, lower case alphabetic data is translated to upper case. Existing lower case alphabetic data is displayed in upper case, while the internal HEX representation of the data remains as is. This process is apparent in the unformatted editing mode. For example, an existing lower case x is displayed as an upper case X on the first line of the three-line display, while lines two and three show the HEX representation of a lower case x (A7).

If caps mode is OFF, lower case alphabetic data is left as is. Existing lower case alphabetic data is displayed in lower case.

Keyword operands and all panel parameters are translated to upper case regardless of the caps mode.

The caps mode is not retained from session to session. It is set to ON when you invoke File-AID for IMS/ISPF. You can change the setting at any time using the CAPS command within File-AID for IMS/ISPF. [1]

```
                ┌ON──┐
►►──CAPS──┤    ├──────────────────────────────────────────────────────►◄
                └OFF─┘
```

If you omit the operand, ON is assumed.

CHANGE and RCHANGE

The CHANGE command is used to find and change one or more occurrences of string-1 to string-2. You can enter the operands in any sequence, except string-2 must follow string-1, col-2 must follow col-1, and the DATA-NAME or CURSOR (CUR, C) operand must be last.

Note: The CHANGE command cannot be used to change a Key Value field.

```
►►──┬CHANGE──┬──┬string-1──────┬──┬string-2──────┬──┬──────────────────────┬──►
    ├CHG─────┤  ├'string-1'────┤  ├'string-2'────┤  ├SEG (segment-name)───┤
    └C───────┘  ├"string-1"────┤  ├"string-2"────┤  ├SEGM (segment-name)──┤
                ├X'string-1'───┤  ├X'string-2'───┤  └SEGMENT (segment-name)─┘
                ├X"string-1"───┤  ├X"string-2"───┤
                ├*─────────────┤  └*─────────────┘
                └INVALID───────┘

    ┌NEXT──┐  ┌NORCD──┐
►──┤      ├──┤       ├──┬──────────┬──┬──────────────────────────────────┬──►◄
    ├ALL───┤  ├ALL───┤  ├GET (n)──┤  ├col-1──┬──────────┬──┤
    └FIRST─┘  └CHILD──┘  └Gn───────┘  │        └col-2──┘  │
                                      ├data-name──────────┤
                                      └─┬CURSOR──┬──────┘
                                        ├CUR─────┤
                                        └C───────┘
```

1. For Double-Byte Character Set (DBCS) support, CAPS mode is always OFF to support Katakana characters.

PL/I

You cannot use the CHANGE command to change individual bit patterns within a BIT data item. For example, if a field is declared as BIT(8) and contains 11000101, a CHANGE '101' '001' command does not find the 101 in bits five through seven of the field. However, because 11000101 is the bit pattern for the character E, a CHANGE E F or CHANGE X'C5' X'C6' command successfully changes E to F in the Bit field.[1]

Refer to page 4-82 for information on how the CHANGE command is affected by non-keyed and nonunique segments.

You can specify string-1 and string-2 in any of the following formats:

- A simple string: Any series of characters that does not start or end with an apostrophe (') or quotation mark (") and does not contain any blanks.
- A delimited string: Any string that starts and ends with an apostrophe, but does not contain imbedded apostrophes. Or, any string that starts and ends with a quotation mark but does not contain imbedded quotation marks.
- A hexadecimal string: Any delimited string of hexadecimal characters preceded by the letter X (for example, X'C1F0').
- A single asterisk: This format causes the string, but not the optional operands except for a data-name field boundary, used in the previous CHANGE command to be used again.

Adjusting Length of Strings

File-AID for IMS replaces string-1 with string-2 only when they are the same length. When appropriate, the strings are forced to be the same length. For example, in the command CHANGE SUSAN SUE, string-1 (SUSAN) is five bytes in length, and string-2 (SUE) is three bytes. File-AID for IMS replaces the next occurrence of SUSAN with SUE...

String-2 is forced to five bytes long with blank padding to the right (positions four and five). This is done so that any numeric data to the right of string-2 is not shifted to the left.

File-AID for IMS does not adjust the length of a delimited string. For example, in the command CHANGE 'SUE' SUSAN, File-AID for IMS assumes that you want to search for the specific value SUE and not for the value SUE[aa]. In this situation the change is not made, and the error message INVALID CHANGE TO TEXT is displayed.

Asterisk (*) Operand

The asterisk operand can represent the string-1 or string-2 value used in the previous CHANGE command. You can use two asterisks to represent both string-1 and string-2. For example, the command CHANGE SMITH JONES can be repeated as follows:

- CHANGE * JONES
- CHANGE SMITH *
- CHANGE * *

1. In Double-Byte Character Set (DBCS) support, the command line is in mixed mode. With the CHANGE command, the shift-out (X'0E') and shift-in (X'0F') characters that delineate the strings are only used when necessary. The SO and SI characters are not used only when both string-1 and string-2 are DBCS strings. The SO and SI characters are included as part of the string replacement when EBCDIC, MIXED, or any combination with a DBCS string is specified. Any leading or trailing SO and SI characters are not included when MIXED with a DBCS string is specified. Specifying MIXED with a DBCS string does not include any leading or trailing SO and SI characters.

The ALL operand, column boundaries, or a data-name must be specified with the CHANGE command for DBCS support. These operands are required to further qualify the character string search and replacement and to reduce the possibility of changing data unintentionally

The data-name boundary is the only optional Change command operand that File-AID for IMS retains for the Change * * command. For example, the command CHANGE SMITH JONES NAME changes the characters SMITH to JONES in the field NAME. If you subsequently enter the command CHANGE * * FIRST, File-AID for IMS changes the first occurrence of the characters SMITH to JONES in the field NAME.

INVALID Operand

A data-name or CURSOR operand is required with the INVALID operand to limit database searches.

When used with the data-name or CURSOR operand in the Edit Formatted sub-option, the INVALID operand causes field values that do not conform to the appropriate COBOL PICTURE clause or PL/I data type to be found. For numeric fields, any value that does not conform to the field's data type is invalid. For alphanumeric fields, any value that contains non-displayable data is invalid.

ANY Operand

The ANY operand for string-1 can be used to change any value in a range of columns by specifying col-1 and, optionally, col-2. It can also be used to change any value in a field by specifying a data-name boundary. If you specify col-1 without col-2, any value starting in col-1 is changed to string-2, based on the length of string-2. For example, the command CHANGE ANY ABC 10 changes any value that starts in column 10 and ending in column 12 to ABC. If you specify both col-1 and col-2, the entire value contained within and including col-1 and col-2 is changed to string-2, with blank padding to the right if necessary. For example, the command CHANGE ANY ABC 10 20, changes any value that starts in column 10 and ending in column 20 to ABC..... If you use the data-name or CURSOR option, the entire existing value in the appropriate field is changed to string-2.

SEGMENT Operand

Use the SEGMENT operand to limit the search to the specified segment type. If you do not use the SEGMENT operand, all segment types are searched unless you specify a data-name boundary. In this case, only the segment type that you are currently positioned on is searched.

Controlling Starting Point and Extent of Change

You can control the starting point and extent of the change by using one of the following operands:

NEXT

Starts the scan at the current cursor location and proceeds forward to find the next occurrence of the string. This is the default operand.

ALL

Starts the scan at the top of the search range and proceeds forward to find all occurrences of the string.

FIRST

Starts the scan at the top of the search range and proceeds forward to find the first occurrence of the string.

You can further control the extent of the change by using the following operand:

GET(n)

Limits the number of segments that are processed, where n is the number of segments to be searched. 0 is the default value. If you specify 0 or omit this operand, there is no limit placed on the extent of the search. In this case, all database segments can potentially be searched. When the number of segments processed reaches *n*, the FIND/CHANGE Message screen shown on page 11-5 is displayed.

FIND/CHANGE Message Screen

The FIND/CHANGE Message screen shown in Figure 11-1 on page 11-5 is displayed when the number of segments processed reaches the limit imposed by the GET(n) operand, installation parms, or a security exit.

If you are using a security exit, File-AID for IMS enforces the limit set by either the security exit or the value specified for n, whichever is lower.

If you are not using a security exit, File-AID for IMS enforces the limit set by either the installation parms or the value specified for n, whichever is lower.

Figure 11-1. FIND/CHANGE Message Screen

```
File-AID for IMS  ----------  FIND/CHANGE Message  ------ * GET COUNT REACHED *
COMMAND ===>


File-AID has reached the maximum get next calls set by the ENTERED COMMAND

         2 segments retrieved


Press Enter to continue the CHANGE
Use END to terminate the command
```

The FIND/CHANGE Message screen displays information about what kind of limit was reached (get next calls, installation parms, or security exit). The upper-right corner displays information about the results of the search. In Figure 11-1, the limit reached was imposed by the CHANGE command and the message indicates that the search was stopped because *n* segments were retrieved.

When this screen is displayed, you can press Enter to continue the search or END to terminate the search.

Controlling the Range of Change

You can control the range of change by using one of the following operands:

NORCD

Searches the entire database. This is the default operand.

RCD

Searches only the current database record.

CHILD

Searches only the children of the current segment.

Limiting the Search

You can limit the search to a portion of each segment rather than the entire segment by specifying column boundaries (col-1 and col-2 operands) or a data-name boundary (data-name or CURSOR operand).

Column Boundaries

When using column boundaries, col-1 indicates the starting position and col-2 indicates the ending position for the search. If you specify col-1 without col-2, the string must start in col-1 to be found. If you specify col-1 and col-2, the string does not need to start in col-1, but it must be completely contained within the boundaries to be found.

Data-Name Boundary

You can specify a data-name boundary only in the Formatted mode. Data-name indicates the portion of the segment that corresponds to the field to be changed. You can abbreviate the data-name if the abbreviation results in a unique data-name.

If you specify a data-name, it must exist in the current segment's COBOL or PL/I layout. By specifying a data-name, the search is limited to the current segment type.

For example, assume that you are editing segment ORDR020 using a segment layout that contains a 30-byte alphanumeric field [PIC X(30) in COBOL; CHAR(30) in PL/I] called DESCRIPTION that starts in column 20 of the segment. To change the next occurrence of the characters MODEM to COAX within that field, you can enter the command CHANGE MODEM COAX DESCRIPTION. Only columns 20 through 49 of each ORDR020 segment are searched.

Another way to confine the search to a specific field within each segment is to use the CURSOR operand. To do this, enter the word CURSOR, CUR or C in place of a specific data-name and position your cursor on the data-name line to which you want to limit the search and press Enter.

When you specify an alphanumeric field, the string does not need to start in position 1 of the Data-Name field, but it must be completely contained within the field to be found. When you specify a numeric field, the string is converted to the appropriate numeric data type before the search begins.

For example, again assume that you are editing segment ORDR020 using a segment layout that contains a three-byte, signed, packed field [PIC S9(5) COMP-3 in COBOL; FIXED DEC(5) in PL/I] called QTY-ORDERED. If you enter the command CHANGE '200' '250' QTY-ORDERED, the value 200 is first converted to the internal, signed, packed representation, and the appropriate portion of each ORDR020 segment is scanned for that value.

COBOL

If the data-name boundary you specify is for a POINTER or INDEX data item, you must enter the string-1 and string-2 operands as hexadecimal strings.

PL/I

If the data-name boundary you specify is for a BINARY FLOATING POINT or POINTER data item, you must enter the string-1 and string-2 operands as hexadecimal strings.

A data-name boundary cannot be specified for a BIT data item.

When you want to limit the search to a numeric field, enter string-1 and string-2 so that they cannot be misinterpreted as column boundaries. For example, the command CHANGE 200 300 QUANTITY searches for the characters QUANTITY starting in column 200 and ending in column 300 rather than changing the value 200 to 300 in the Quantity field. Do the following to distinguish string-1 and string-2 values from column boundaries:

- Enclose the value in apostrophes or quotes.
- Precede the value with a positive (+) or minus (-) sign if the COBOL picture or PL/I attribute allows a sign.
- Specify a decimal point.

For example, each of the following commands changes the value 200 to 300 in the Quantity field:

- CHANGE "200" "300" QUANTITY
- CHANGE +200 +300 QUANTITY
- CHANGE 200. 300. QUANTITY

The search proceeds until one or all occurrences of string-1 are found or until the end of the range is encountered. If string-1 is not found, one of the following messages is displayed.

For ALL	NO CHARS string FOUND
For FIRST or NEXT	BOTTOM OF DATA REACHED

When BOTTOM OF DATA REACHED is displayed, you can enter the RCHANGE command to continue searching by wrapping to the top of the data. If an occurrence is not found anywhere in the data, a NO CHARS string FOUND message is displayed.

When string-1 is found in fields that have been excluded from display, the fields are displayed again. Also, if the segment layout is shorter than the segment it defines and string-1 is found in a part of the segment beyond the reach of the segment layout, the message TEXT FOUND - NON DISPLAY is displayed.

Repeat Change (RCHANGE)

The RCHANGE command finds and changes the next occurrence of the designated string. The other optional parameters remain in effect, as specified in the last CHANGE command.

Note: If you press a PF key assigned to the FIND or CHANGE command, File-AID for IMS treats the command as RFIND or RCHANGE.

CHANGE Command Screen

If you enter CHANGE or C in the Command field with no operands while in Edit mode, the CHANGE Command screen is displayed. This screen enables you to find and change one or more occurrences of a string. [1]

1. For Double-Byte Character Set (DBCS) support, the primary commands DBCS and MIXED enable you to change the format of From String and To String fields. Refer to “Double-Byte Character Support” on page 2-4 for a description of File-AID for IMS/ISPF’s DBCS support.

Figure 11-2. CHANGE Command Screen

```
File-AID for IMS  -----------  CHANGE Command  -------------------------------
COMMAND ===>

Specify CHANGE operands:
       From string ===>
         To string ===>
      Segment name ===>          (Blank for all segment types)

          Modifier ===>          (NEXT, ALL, FIRST)

      Search range ===>          (NORCD, RCD, CHILD)

     Maximum calls ===>          (0 = No limit)

        Data-name  ===>
             or
      Start column ===>        End column ===>       (Blank for default cols)

NOTE: You may bypass this screen by entering the CHANGE command with operands:
CHANGE string1 string2 SEG(segment-name) (NEXT)  (NORCD) GET(n) (col-1 (col-2)
CHG                    SEGM              (ALL)   (RCD)   GN     (data-name)
C                      SEGMENT           (FIRST) (CHILD)        (CURSOR)
                                                                (CUR)
                                                                (C)
```

From String

Enter the string that you want changed. Refer to“CHANGE and RCHANGE” on page 11-2 for more information on string syntax.

To String

Enter the string that is to replace the From String. The To String can be specified by using the same syntax as the From String, except that the INVALID and ANY operands cannot be used.

Segment Name

Enter the name of the segment type to be searched. If you do not specify a segment type, all segment types are searched unless you specify a data-name boundary. If you specify a data-name boundary, only the segment type that you are currently positioned on is searched.

Modifier

Enables you to control the starting point and extent of the search. The following operands are valid:

NEXT Starts the scan at the current cursor location and proceeds forward to find the next occurrence of the string. This is the default operand.

ALL Starts the scan at the top of the search range and proceeds forward to find all occurrences of the string.

FIRST Starts the scan at the top of the search range and proceeds forward to find the first occurrence of the string.

Search Range

Enables you to control the range of the search. The following operands are valid:

NORCD Searches the entire database. This is the default operand.

RCD Searches only the current database record.

CHILD Searches only the children of the current segment.

Maximum Calls

Enter the maximum number of segments to be searched. 0 is the default value. If you leave this field blank or specify 0, there is no limit placed on the extent of the search. In this case, all database segments are potentially searched.

When the number of segments processed reaches the number specified in the Maximum Calls field, the FIND/CHANGE Message screen is displayed. Refer to page 11-5 for an illustration and description of this screen.

You can limit the search to a portion of each segment rather than the entire segment by specifying a data-name or column boundaries.

Data-Name

If you are in Formatted mode, you can specify a data-name that indicates the portion of the segment that corresponds to the field to be searched.

If you specify a data-name, it must exist in the current segment's COBOL or PL/I layout. By specifying a data-name, the search is limited to the current segment type.

You can also use the CURSOR operand in place of a data-name. To do this, position the cursor on the data-name to which you want to limit the search while in Formatted mode before you invoke the CHANGE command. When the CHANGE Command screen is displayed, enter CURSOR, CUR or C in the Data-Name field.

Start Column

Enter the starting position for the search.

End Column

Enter the ending position for the search. If you specify a Start column without an END column, the string must begin in the Start column to be found. If you specify both Start and End columns, the string does not need to begin in the Start column, but it must be completely contained within the boundaries to be found.

CHAR

The CHAR command switches from formatted or unformatted mode to character mode in the browse/edit option. The segment where you are positioned when you enter the command is the first segment displayed on the Character screen.

```
>>──CHAR──────────────────────────────────────────────────────────────────>◄
```

CHILD

The CHILD command enables you to change your position in a database from the current segment position to any occurrence of any segment that is hierarchically dependent on the current segment.

```
>>──┬─CHILD─┬──┬─────────────┬──┬──────────┬──────────────────────────────────────────────>◄
    └─CH────┘  └─segment-name─┘  ├─n────────┤
                                 ├─┬─FIRST─┬─┤
                                 │ └─F─────┘ │
                                 ├─┬─LAST──┬─┤
                                 │ └─L─────┘ │
                                 └─┬─MAX───┬─┘
                                   └─M─────┘
```

If you enter the CHILD command without any operands, File-AID for IMS retrieves the first occurrence of the first hierarchical child defined in the DBD under the current segment.

If you enter the CHILD command without specifying a SEGMENT-NAME operand, all File-AID for IMS restricts its child processing to the first hierarchical child segment type under the current segment. If you enter the SEGMENT-NAME operand, it must be one of the segment types defined in the DBD to be a hierarchical dependent of the current segment type. The segment name you enter does not have to be an immediate child segment type at the next hierarchical level in the database under the current segment. You can specify the name of any dependent segment type in the hierarchical substructure under the current segment. When you enter the SEGMENT-NAME operand, File-AID for IMS restricts its child processing to the dependent segment type specified.

The OCCURRENCE operand indicates which occurrence of the specified dependent segment type under the current segment you want to retrieve. If you do not enter the OCCURRENCE operand, File-AID for IMS retrieves the first occurrence of the specified dependent segment type under the current segment.

The valid values for the OCCURRENCE operand are as follows:

n

If you specify a positive integer from 1 to 2,147,483,647, File-AID for IMS retrieves the *nth* occurrence of the specified dependent segment type. If less than *n* occurrences of the specified dependent segment type exist, an error message is displayed.

FIRST, F

File-AID for IMS retrieves the first occurrence of the specified dependent segment type, if any exist.

LAST, L

File-AID for IMS retrieves the last occurrence of the specified dependent segment type, if any exist.

MAX, M

Same as LAST operand.

When the requested dependent segment occurrence cannot be found, your current segment position does not change.

Refer to page 4-82 for information on how the CHILD command is affected by nonkeyed and nonunique segments.

COBOL

The COBOL command changes the current language mode to COBOL. Enables you to view formatted segment layouts that were defined using COBOL PICTURE and USAGE clauses.

```
>>-┬COBOL─┬──────────────────────────────────────────────────────────────────────────────────────>◄
   └COB───┘
```

File-AID for IMS/ISPF maintains separate concatenations of COBOL and PL/I layouts and cross-reference datasets. These concatenations automatically toggle between the COBOL and PL/I sets when you enter the COBOL or PLI command. Layouts and cross-reference datasets that you have entered for use with COBOL are kept separate from those you have entered for PL/I.

*CURSOR

The CURSOR command moves the cursor to the first input field on line two of the screen, which is usually the OPTION or COMMAND field.

```
►►──CURSOR──────────────────────────────────────────────────────────►◄
```

DBCS

The DBCS command changes the display format to Double-Byte Character Set (DBCS).

```
►►──┬─DBCS─┬──────────────────────────────────────────────────────────►◄
    └─DB───┘
```

DELETE (Edit only)

The DELETE command enables you to delete segment occurrences from a database. When you enter the DELETE command, the current segment and all dependent segment occurrences are deleted. After the deletion occurs, the next twin occurrence of the current segment type becomes the new current segment. If the current segment you delete is the last occurrence of that segment type in the current hierarchical path, the informational message POSITIONED BEYOND TWINS is displayed. You can then use one of the database movement commands to select a new current segment.

There are no operands associated with the DELETE command.

```
►►──┬─DELETE─┬──────────────────────────────────────────────────────►◄
    ├─DEL────┤
    └─D──────┘
```

Used in the Segment/Layout XREF function to delete the specified DBD and its segments from the XREF member being edited.

```
►►──┬─DELETE─┬──┬─dbd-name─┬──────────────────────────────────────────►◄
    ├─DEL────┤  │          │
    └─D──────┘  │          │
```

DOWN

The DOWN command causes scrolling towards the end of a segment, database, segment layout, member list, and bookmarks list by the specified scroll amount.

The DOWN command is enabled on the Browse/Edit Formatted, Unformatted, and Character screens. It is also enabled on the Member List and Bookmark screens. See Chapter 4, “Browse/Edit” for information on using the DOWN command on these screens.

Refer to “Scrolling” on page 1-13 for a detailed discussion of the DOWN command and its operands.

```
►►──DOWN──┬──────────┬──────────────────────────────────────────────────►◄
          ├─n─────────┤
          ├─┬─PAGE─┬─┤
          │ └─P────┘ │
          ├─┬─DATA─┬─┤
          │ └─D────┘ │
          ├─┬─HALF─┬─┤
          │ └─H────┘ │
          ├─┬─MAX──┬─┤
          │ └─M────┘ │
          └─┬─CUR──┬─┘
            ├─CSR──┤
            └─C────┘
```

DSN

The DSN command displays the View Dataset Concatenations screen, where you can view all dataset concatenations defined to the session. You can use the DSN command on any File-AID for IMS screen except those screens that display when the product is attached to IMS. When you exit the View Dataset Concatenations screen, you’re returned to the screen where you entered the DSN command.

```
►►──DSN──────────────────────────────────────────────────────────────────►◄
```

EBCDIC

The EBCDIC command changes the display format to Single-Byte Character Set (EBCDIC).

```
►►──┬─EBCDIC─┬──────────────────────────────────────────────────────────►◄
    └─EB─────┘
```

*END

The END command can be used in the following ways:

- To terminate the current screen and return control to the previous, higher level screen.
- To terminate the current screen and transfer control to the next screen in the conversation.
- To terminate File-AID for IMS/ISPF if entered on the Primary Option Menu.

If you enter the END command on the Selection Criteria - Menu screen and the file was updated, END performs an automatic save and displays the Selection Criteria Dataset Specification screen confirming the save. To save the changes made to the file since the

last SAVE, you must specifically issue a SAVE command on any other selection criteria screen.

```
>>--END-------------------------------------------------------------><
```

ENV

The ENV command displays the File-AID for IMS Select IMS Environment screen, where you can select an environment for use with the product or view its configuration. You can also use the ENV command to generate a printed report of the values defined by a particular environment. This command terminates the current screen processing. When you exit the Select IMS Environment screen, you're returned to the File-AID for IMS Primary Option Menu, where you can select the desired option.

```
>>--END-------------------------------------------------------------><
```

EXCLUDE (Edit Formatted only)

The EXCLUDE command unprotects or protects the left side of Edit Formatted and Formatted Field Selection Criteria screens so that the X line command can be entered to exclude lines.

```
                    ┌ON──┐
>>─┬EXCLUDE──┬──┼────┼──────────────────────────────────────────────────><
   └X────────┘  └OFF───┘
```

FIELD

The FIELD command accesses the Field Criteria Set List screen (Figure 8-9 on page 8-14) from any screen within the selection criteria option.

```
>>─┬FIELD──┬──────────────────────────────────────────────────────────><
   └FLD────┘
```

FIND and RFIND

The FIND command is used to search for one or more occurrences of a character string. You can enter the operands in any sequence except that col-2 must follow col-1, and

data-name or CURSOR must be the last operand in the command. Operands must be separated by one or more blanks.

```
>>-┬FIND──┬──┬string-1──────┬──┬──────────────────────────┬──────────────────────────>
   └F─────┘  ├'string-1'────┤  ├SEG (segment-name)───────┤
             ├"string-1"────┤  ├SEGM (segment-name)──────┤
             ├X'string-1'───┤  └SEGMENT (segment-name)───┘
             ├X"string-1"───┤
             ├C'string-1'───┤
             ├*─────────────┤
             └INVALID───────┘

   ┌NEXT──┐  ┌NORCD──┐
>──┼──────┼──┼───────┼──┬───────────┬──┬──────────────────────────┬──────────────────────>
   ├ALL───┤  ├ALL───┤  ├GET (n)───┤  ├col-1──┬──────────┬──┤
   └FIRST─┘  └CHILD──┘  └Gn───────┘  │        └col-2───┘  │
                                     ├data-name───────────────┤
                                     └┬CURSOR──┬──────────┘
                                      ├CUR─────┤
                                      └C───────┘
```

The operands function the same for the FIND command as they do for the CHANGE command. Refer to “CHANGE and RCHANGE” on page 11-2 for more information about the operands.

Refer to page 4-82 for information on how the FIND command is affected by non-keyed and nonunique segments.

PL/I

You cannot use the FIND command to find individual bit patterns within a BIT data item. For example, if a field is declared as BIT(8) and contains 11000101, a FIND 101 command does not find the 101 in bits five through seven of the field. However, because 11000101 is the bit pattern for the character E, a FIND E or FIND X’C5’ command successfully finds E in the Bit field.[1]

Repeat Find (RFIND)

The RFIND command is used to find the next occurrence of the designated string. The other optional parameters remain in effect as specified in the last FIND command.

If you press a PF key assigned to the FIND or CHANGE command, File-AID for IMS treats the command as RFIND or RCHANGE.

FIND Command Screen

The FIND Command screen is displayed when the FIND command is entered without any operands in the Command field of an Edit or Browse screen.[2]

1. In Double-Byte Character Set (DBCS) support, the command line is in mixed mode. With the FIND command, the shift-out (X’0E’) and shift-in (X’0F’) characters that delineate a DBCS string are not used as part of the string search. For EBCDIC and MIXED strings, the search string is processed as is, including SO and SI characters.
2. For Double-Byte Character Set (DBCS) support, the primary commands DBCS and MIXED enable you to change the format of From String and To String fields. Refer to “Double-Byte Character Support” on page 2-4 for a description of File-AID for IMS/ISPF’s DBCS support.

Figure 11-3. FIND Command Screen

```
File-AID for IMS  ------------  FIND Command  --------------------------------
COMMAND ===>

Specify FIND operands:
       Find string ===>

      Segment name ===>          (Blank for all segment types)

          Modifier ===>          (NEXT, ALL, FIRST)

      Search range ===>          (NORCD, RCD, CHILD)

     Maximum calls ===>          (0 = No limit)

        Data-name  ===>
             or
      Start column ===>        End column ===>       (Blank for default cols)

NOTE: You may bypass this screen by entering the FIND command with operands:
FIND string SEG(segment-name) (NEXT)  (NORCD)  GET(n) (col-1 (col-2))
F           SEGM              (ALL)   (RCD)    GN     (data-name)
            SEGMENT           (FIRST) (CHILD)         (CURSOR)
                                                      (CUR)
                                                      (C)
```

Find String

Enter the string that you want to search for. Refer to“CHANGE and RCHANGE” on page 11-2 for more information on string syntax.

Segment Name

Enter the name of the segment type to be searched. If you do not specify a segment type, all segment types are searched unless you specify a data-name. In this case, the segment type that you are currently positioned on is searched.

Modifier

Enables you to control the starting point and extent of the search. The following operands are valid:

NEXT Starts the scan at the current cursor location and proceeds forward to find the next occurrence of the string. This is the default operand.

ALL Starts the scan at the top of the search range and proceeds forward to find all occurrences of the string.

FIRST Starts the scan at the top of the search range and proceeds forward to find the first occurrence of the string.

Search Range

Allows you to control the range of the search. The following operands are valid:

NORCD Searches the entire database. This is the default operand.

RCD Searches only the current database record.

CHILD Searches only the children of the current segment.

Maximum Calls

Enter the maximum number of segments to be searched. 0 is the default value. If you leave this field blank or specify 0, there is no limit placed on the extent of the search. In this case, all database segments are potentially searched.

When the number of segments processed reaches the number specified in the Maximum Calls field, the FIND/CHANGE Message screen is displayed. Refer to page 11-5 for an illustration and description of this screen.

You can limit the search to a portion of each segment rather than the entire segment by specifying a data-name or column boundaries.

Data-Name

If you are in Formatted mode, you can specify a data-name that indicates the portion of the segment that corresponds to the field to be searched.

If you specify a data-name, it must exist in the current segment's COBOL or PL/I layout. By specifying a data-name, the search is limited to the current segment type.

You can also use the CURSOR operand in place of a data-name. To do this, position the cursor on the data-name you want to limit the search to while in Formatted mode before you invoke the FIND command. When the FIND Command screen is displayed, enter CURSOR, CUR or C in the Data-Name field.

Start Column

Specify the starting position for the search.

End Column

Specify the ending position for the search. If you specify a Start column without an End column, the string must begin in the Start column to be found. If you specify both Start and End columns, the string does not need to begin in the Start column, but it must be completely contained within the boundaries to be found.

FORMAT

In the browse/edit modes, switches from Unformatted or Character mode to Formatted mode. In the Character mode, which displays several segments per screen, the first segment shown is selected for formatted display.

```
►►─┬─FORMAT─┬──────────────────────────────────────────────────────────►◄
   └─FMT────┘
```

FPRINT

The FPRINT command enables you to use COBOL or PL/I layouts as templates when you print database segments. You can direct output generated by the FPRINT command to either a printer or a dataset. The dataset that contains FPRINT output must have the following attributes:

```
RECFM=FBA
LRECL=133
DSORG=PS
```

```
►►─┬─FPRINT─┬──┬─────┬──────────────────────────────────────────────────►◄
   └─FP─────┘  ├─ALL─┤
               └─n───┘
```

When you enter the FPRINT command on a Formatted screen, the Formatted Print screen shown in Figure 11-4 is displayed. FPRINT processing occurs in the foreground at your terminal. When processing is complete, output is available immediately.

Figure 11-4. Formatted Print Screen

```
File-AID for IMS  ------------  Formatted Print  ------------------------------
COMMAND ===>

Number of segments to print ===> ALL        (Number or ALL)
     Maximum lines per page ===> 55         (20 - 99)
     Spacing before headers ===> 2          (1 - 5; T = Top of Page)

Specify either:
        Destination printer ===> LOCAL
               Sysout class ===> A
            --- OR ---
         "TO" Print dataset ===>
        Dataset disposition ===>            (NEW, SHR, OLD or MOD)
                     Volser ===>             Password ===>

        If disposition is NEW, specify the following allocation parameters:
               Generic unit ===> DISK
                 Block size ===> 32760      (DSORG=PS,RECFM=FBA,LRECL=133)
                Space units ===> TRK        (BLK, TRK, or CYL)
                Primary QTY ===> 2          (in above units)
              Secondary QTY ===> 1          (in above units)

Press Enter to print, END to cancel
```

Number of Segments to Print

Enter the number of segments to print. Printing begins at the current position and stops when the number of segments to print is met or the end of the database is reached. The ALL operand prints all segments from the current position to the end of the database. If you specify an operand when you enter the FPRINT command on the Formatted screen, the operand is automatically entered in the Number of Segments to Print field on the Formatted Print screen.

Maximum Lines Per Page

Enter the maximum number of lines you want printed on a page. The maximum print lines per page can vary from 20 to 99.

Spacing Before Headers

Enter the number of blank lines you want before a header is printed. Spacing before headers is used to print reports that have repetitive information preceded by detailed heading lines. You can specify that from one to five blank lines appear or that each set of heading lines be printed at the top of a new page.

Destination Printer

Enter the printer where you want to direct output.

Sysout Class

Enter an output class. FPRINT output is placed in the sysout queue you specify and assigned a name equal to your TSO ID.

TO Print Dataset

Enter the TO dataset name. If you are printing to an existing dataset, the dataset must be physically sequential with a record length of 133 and a record format of FB or FBA. If you specify a print dataset, your destination printer and sysout class are ignored.

Dataset Disposition

Enter SHR, OLD, or MOD to allocate to an existing dataset. Enter NEW to allocate to a new dataset.

New datasets are created as physically sequential files with a record length of 133 and record format of FBA.

Volser

For a new dataset, enter the volume serial number of the disk that is to contain the dataset or leave blank for system default. For an existing uncataloged dataset, enter the VOLSER.

Password

If the dataset is password protected, enter its password.

Generic Unit

Refers to the device type where the new dataset is to reside. The names of these devices are installation dependent. Some common examples are DISK and 3380 devices.

Block Size

Identifies the block size for the new dataset. The default is 23408.

Space Units

Specify whether the space for the new dataset is to be allocated in blocks (BLK), tracks (TRK), or cylinders (CYL).

Primary QTY

Specify the number of space units to be reserved for the new dataset.

Secondary QTY

Specify the number of space units to be allocated if the new dataset uses secondary extents.

If you specify ALL in the Number of Segments to Print field, the warning shown on the screen in Figure 11-5 is displayed.

Figure 11-5. Formatted Print Screen with Warning Displayed

```
File-AID for IMS  ------------  Formatted Print  ------------------------------
COMMAND ===>

Printing will begin at the current position in the data base

Number of segments to print ===> ALL        (Number or ALL)


*** WARNING ***

  You have submitted a request to print ALL data base records from the
current position to the end of the data base. This may result in excessive
printer output. You may change the number of segments to print, if desired,
and press Enter to print, or press END to cancel.
```

GOB

The GOB command can be used in the Browse/Edit Formatted and Unformatted modes to scroll backwards through database locations that have been displayed by File-AID for IMS.

```
>>-┬GOB-┬-┬-------┬-------------------------------------------------------><
   └GB--┘ └n------┤
                  └MAX-----┘
```

GOF

The GOF command can be used in the Browse/Edit Formatted and Unformatted modes to scroll forward through database locations that have been displayed by File-AID for IMS.

```
>>-┬GOF-┬-┬-------┬-------------------------------------------------------><
   └GF--┘ └n------┤
                  └MAX-----┘
```

GOH/GOT

The GOH/GOT commands reposition the display to the first segment that was displayed when you entered the Browse/Edit Formatted, Unformatted, and Character modes.

```
>>-┬GOH-┬-------------------------------------------------------------------><
   ├GH--┤
   ├GOT-┤
   └GT--┘
```

GOL

The GOL command repositions the display to the most recent segment displayed in the Browse/Edit Formatted and Unformatted modes.

```
>>-┬GOL-┬-------------------------------------------------------------------><
   └GL--┘
```

GOM

The GOM command enables you to change database location displayed in the Browse/Edit Formatted, Unformatted, and Character modes.

```
>>-┬GOM-┬-bookmark-name-------------------------------------------------------><
   └GM--┘
```

*HELP

THE HELP command shows the extended description of a message displayed or invokes the online tutorial facility. If File-AID for IMS/ISPF displays a message in the upper right-hand corner of a screen, the HELP command causes the extended message description to be displayed on line three of the screen. The tutorial is invoked by immediately entering another HELP command or by entering HELP when no message has been displayed.

```
>>──HELP──────────────────────────────────────────────────────────────><
```

*HEX

The HEX command causes data to be displayed in either hexadecimal or character format. Hexadecimal format consists of a three-line display. The first line is the character format of the data and the next two lines represent the hexadecimal format of the data.

If you omit the operand, ON is assumed. When HEX mode is ON, the body of the screen is displayed in three-line HEX format. When HEX mode is OFF, it is displayed in character format.

The HEX mode is initialized to ON upon entry to Browse/Edit Unformatted mode. The HEX mode defaults to OFF in the Browse/Edit Formatted and Character modes and Key Specification screen.

```
                ┌ON──┐
>>──HEX──────────┼────┼──────────────────────────────────────────────────><
                └OFF─┘
```

HIERARCHY

The HIERARCHY command graphically displays the structure of the database you are editing, browsing, or is defined by the selected PCB.

```
>>─┬HIERARCHY─┬──────────────────────────────────────────────────────────>
   ├HIER──────┤
   └HI────────┘
```

The Hierarchy Display screen is displayed when you enter the HIERARCHY command on an Edit screen, or the H line command from the DBD Selection List for Static PSB screen (Figure 4-5 on page 4-12). When entered in edit or browse, the segment you were editing when you entered the HIERARCHY command and its entire path are highlighted.

Figure 11-6. Hierarchy Display Screen

```
File-AID for IMS  -----------  Hierarchy Display  ----------------------------
COMMAND ===>                                                   SCROLL ===> PAGE


                 <*******<******  TOP OF DISPLAY *******>*******>
                                DBDNAME: PORDR
                                 .-------------.
                                 |  ORDR010    |
                                 |     1       |
                                 '-------------'
                                        |
                          .-------------+-------------.
                          |             |             |
                 .-------------. .-------------. .-------------.
                 |  ORDR020    | |  ORDR040    | |  ORDR050    |
                 |     2       | |     4       | |     5       |
                 '-------------' '-------------' '-------------'
                          |
                          |
                          |
                 .-------------.
                 |  ORDR030    |
Press Enter for the DBD/SEGMENT information or,
TAB to the desired segment and press Enter for SEGMENT information
```

This screen displays the DBDNAME for the current database and the segment name and number for each segment in the database. If entered on a selected PCB, the display shows which segments are included and not included in the PCB.

You can scroll UP, DOWN, LEFT, or RIGHT to view parts of a database that might not fit on a single screen.

You can do the following on the Hierarchy Display screen:

- Press Enter without selecting a segment to display the DBD/Segment Information screen.
- Press TAB to select a segment, and then press Enter to display the Segment Information screen for that segment.
- Enter the END command to return to the edit screen.

DBD/Segment Information

The DBD/Segment Information screen is displayed when you press ENTER on the Hierarchy Display screen without selecting a segment or enter the INFO command on the Segment Information screen.

Figure 11-7. DBD/Segment Information Screen

```
-----------  Hierarchy Display - DBD/Segment Information  --------   LINE 00001
COMMAND ===>                                                   SCROLL ===> PAGE


    DBDNAME: PORDR
    ACCESS:  HDAM

                                          Start   Length
 Line         Segment         Segment      of      of     Parent   Dataset
Command  Number/Name/Level    Length      Key     Key      Name     Group
-------  ---  --------  --  -----------  ------  ------  --------  --------
         1    ORDR010   1    167         1       6       **ROOT**  PORDRDD
         2    ORDR020   2    50  :200    3       2       ORDR010   PORDRDD
         3    ORDR030   3    45          1       2       ORDR020   PORDRDD
         4    ORDR040   2    40          1       8       ORDR010   PORDRDD
         5    ORDR050   2    47          9       2       ORDR010   PORDRDD




Press Enter for LOGICAL RELATIONSHIP information or,
Select SEGMENT information using S line command
```

DBDNAME

Displays the DBDNAME of the current database.

Access

Displays the DL/I access method for the current database.

Line Command

Enter an S line command next to a segment name and press Enter to display the Segment Information screen.

Segment Number/Name/Level

This field displays the following:

- A sequential number assigned by File-AID for IMS that represents each database segment.
- The segment name defined in the DBD.
- The hierarchical level number of the segment in the database.

Segment Length

Displays the segment length as specified in the DBD. For variable length segments, both the minimum and maximum defined lengths are shown.

Start of Key

Displays the starting position of the segment's key. If the segment is non-keyed, 0 is displayed.

Length of Key

Displays the length of the key. If the segment is non-keyed, 0 is displayed.

Parent Name

Displays the name of the immediate parent segment of the current segment type. If the current segment type is the root, **ROOT** is displayed.

Dataset Group

Displays the DDNAME of the dataset group where the segment is stored.

Terminating the Screen

Do one of the following to terminate the DBD/Segment Information screen:

- Press Enter to display the Logical Relationship Information screen.
- Enter the S line command next to the segment name to display the Segment Information screen for that segment.
- Enter the END command to return to the Hierarchy Display screen.

Logical Relationship Information

The Logical Relationship Information screen is displayed when you press Enter on the DBD/Segment Information screen without entering an S line command next to a segment name.

Figure 11-8. Logical Relationship Information Screen

```
-------  Hierarchy Display - Logical Relationship Information  ----  LINE 00001
COMMAND ===>                                                   SCROLL ===> PAGE


                                                      INSERT
  Data                          Related   Start  Length  REPLACE        Type
  Base    Segment   Related     Segment     of     of    DELETE          of
  Name      Name    DBDNAME      Name     Key    Key     Rules     Relationship
--------  --------  --------  --------  ------ ------ ---------  --------------
PORDR     ORDR010
          ORDR020
          ORDR030
          ORDR040
          ORDR050   PCUST     VORDR050  9      2      VVV,LAST   REAL-LOG-CHILD
PCUST     CUST010
          CUST020
          VORDR050  PORDR     ORDR050   0      0      VVV,HERE   VIR-LOG-CHILD




INSERT, REPLACE, DELETE RULES: P=PHYSICAL, L=LOGICAL, V=VIRTUAL
```

Data Base Name

Lists the name of the current database or a logically related database.

Segment Name

Displays the name of the segment that belongs to the database listed in the Data Base Name column.

Related DBDNAME

Displays the name of the DBD containing the segment that is logically related to the segment listed on the same line in the Segment Name column.

Related Segment Name

Displays the name of the segment logically related to the segment listed on the same line in the Segment Name column.

Start of Key

Displays the starting position of the segment's key. If the segment is non-keyed, 0 is displayed.

Length of Key

Displays the length of the segment's key. If the segment is non-keyed, 0 is displayed.

INSERT REPLACE DELETE Rules

Displays the insert, replace, and delete rules for segments listed in the Segment Name column within related DBD names. FIRST, HERE, or LAST indicates the insert position rule for the segment.

Type of Relationship

Displays the type of relationship that exists between the segment in the Segment Name column and the DBD in the Related DBD column. This field displays "CONCAT-SEGMENT" for a concatenated segment, "REAL-LOG-CHILD" for a real logical child, and "VIR-LOG-CHILD" for a virtual logical child segment.

Terminating the Screen

Enter the END command to terminate the Logical Relationship Information screen. The DBD/Segment Information screen is displayed.

Segment Information Screen

The Segment Information screen is displayed when you enter the S line command next to segment name on the DBD/Segment Information screen or tab to a segment on the Hierarchy Display screen and press ENTER.

Figure 11-9. Segment Information Screen

```
------------------  Hierarchy Display - Segment Information  ------------------
COMMAND ===>

    DBDNAME:                        PORDR
    Segment name:                   ORDR010
    Segment number:                 1
    Parent name:                    **ROOT**
    Segment level:                  1
    Dataset group DDNAME:           PORDRDD
    Description:                    ORDER ROOT

    Key starting position:          1
    Key length:                     6
    Maximum segment length:         167    FIXED

    Processing option(s) in use:    G - GET



 Press Enter for FIELD information or,
 Enter the INFO command for DBD/SEGMENT information
```

DBDNAME

Displays the DBDNAME of the DBD currently being displayed.

Segment Name

Displays the name of the segment selected. This is the segment name selected from the Hierarchy Display screen or from the DBD/Segment Information screen.

Segment Number

Displays a sequential number assigned by File-AID for IMS that represents the database segments.

Parent Name

Displays the segment name of the immediate parent of the current segment type selected. If the segment selected is the root, **ROOT** is displayed.

Segment Level

Displays the hierarchical level number of the segment in the database.

Dataset Group DDNAME

Displays the DDNAME of the dataset group where the segment is stored.

Description

Displays the short description from the segment/layout cross-reference dataset.

Key Starting Position

Displays the starting position of the selected segment's key. If the segment is non-keyed, 0 is displayed.

Key Length

Displays the length of the selected segment's key. If the segment is non-keyed, 0 is displayed.

Maximum Segment Length

Displays the segment length as specified in the DBD. For variable length segments, both the minimum and maximum defined lengths are shown. The literal FIXED or VARIABLE is also displayed to indicate the segment format.

Processing Option(s) in use

Displays the sensitive segment processing options used by File-AID for IMS during the edit/browse session. For browse, G - GET is displayed, except when the sensitive segment PROCOPT is insert only (I - INSERT). For edit, the processing options are G - GET, I - INSERT, R - REPLACE, D - DELETE, or A - ALL. The processing option is determined by the sensitive segment's PROCOPTS.

Terminating the Screen

Do one of the following to terminate the Segment Information screen:

- Enter the INFO command to return to the Hierarchy Display - DBD/Segment Information screen (page 11-21).
- Press Enter without entering any command to display the Field Information screen.
- Enter the END command to return to the screen from which the Segment Information screen was requested.

Field Information Screen

The Field Information screen is displayed when you press Enter without entering a command on the Segment Information screen.

Figure 11-10. Field Information Screen

```
---------------  Hierarchy Display - Field Information  -----------  LINE 00001
COMMAND ===>                                                   SCROLL ===> PAGE


    DBDNAME:      PORDR
    Segment name: ORDR010
    Description:  ORDER ROOT

Field Name           Description              Start  Length      Type
----------   ------------------------------   -----  ------  ---------------
ORDRKEY      SEQUENCE(UNIQUE)                 1      6       CHARACTER
```

Segment Name

Displays the name of the current segment.

Description

Displays the short description of the current segment from the segment/layout cross-reference dataset.

Field Name and Description

Displays all the DBD-defined field names for the current segment and a short description of the fields in the segment. For the key field, SEQUENCE(UNIQUE) is displayed for a unique key, and SEQUENCE(MULTIPLE) is displayed for non-unique keys. SECONDARY INDEX SEARCH FIELD identifies fields used to form a secondary index.

Start

Displays the starting position of each field within the segment.

Length

Displays the length of each field within the segment.

Type

Displays the data type of each field. The possible data types are character, binary halfword, binary fullword, hexadecimal, and packed decimal.

IMS

The IMS command displays the File-AID for IMS IMS Parameters screen, where you can override the IMS parameters defined to an environment. This command terminates the current screen processing. When you exit the Select IMS Environment screen, you are

returned to the File-AID for IMS Primary Option Menu, where you can select the desired option.

```
►►──IMS──────────────────────────────────────────────────────────►◄
```

INFO

The INFO command causes the DBD/Segment Information screen to be displayed when this command is entered from the Segment Information screen.

```
►►──INFO──────────────────────────────────────────────────────────►◄
```

INSERT (Edit only)

The INSERT command enables you to insert a single occurrence of any segment type into a database.

```
►►──┬INSERT──┬──┬──────────────┬──┬──────────────────────────────────┬──►◄
    └I───────┘  └segment-name───┘  └rcd-type-value-1──┬──────────────┬──┘
                                                      └rcd-type-value-2──┘
```

If you do not specify a SEGMENT-NAME operand with the INSERT command, File-AID for IMS inserts a new occurrence of the current segment type.

If you do specify a SEGMENT-NAME operand, it must be one of the segment types in the primary DBD. When specified, the RCD-TYPE-VALUE-1 operand must occur in the operand list before the RCD-TYPE-VALUE-2 operand. The RCD-TYPE-VALUE operands can optionally be delimited by apostrophes or quotation marks. The format X'nnnn...' can be used to enter the HEX representation of rcd-type-values.

Once File-AID for IMS completes its initial validation of the INSERT command, the Key Specification screen is displayed. On this screen, you can specify the fully concatenated key of the new segment that is to be inserted along with the new segment's data fields (refer to "Key Specification" on page 4-53). When you leave the KEY Specification screen, the new segment is inserted, and you are returned to the Formatted screen with the new segment as the current segment.

Inserted segments are initialized on the Key Specification screen, field by field, based on the appropriate segment layout. Alphanumeric fields are initialized with blanks (HEX 40s). Numeric fields are initialized with zero in the appropriate format (for example, packed zero, binary zero, etc.).

COBOL

The half-byte that contains the sign in packed decimal fields, without the SIGN...SEPARATE CHARACTER clause, is set to C for signed fields and F for unsigned fields. The sign character in zoned decimal fields with the SIGN...SEPARATE CHARACTER clause is set to +. COMP-1, COMP-2, and index fields are initialized with HEX zeros.

PL/I

The half-byte that contains the sign in packed decimal fields and zoned decimal fields without the S picture character is set to C. The sign character in zoned decimal fields with the S picture character is set to +. Float Binary, Float Decimal, Pointer, and BIT fields are initialized with HEX zeroes.

The segment layout used in the initialization process is determined by the type of segment you are inserting. A segment defined by a single segment layout is referred to as a single record type segment. A segment defined by multiple segment layouts is referred to as a multiple record type segment.

When you insert a single record type segment, you cannot specify RCD-TYPE-VALUE-1 and 2 operands. The single segment layout specified in the segment/layout cross-reference for the segment being inserted is used to initialize the new segment. If a segment layout is not specified in the segment/layout XREF for the segment being inserted, the non-key field data in the segment is initialized with blanks (HEX 40s).

When you insert a multiple record type segment, the specification of the INSERT command operands is determined by your current segment position, as follows:

- When positioned on an occurrence of the segment type that you want to insert, you need not specify any INSERT command operands. File-AID for IMS initializes the new segment on the KEY Specification screen using the segment layout for the current segment. The rcd-type-value-1 and 2 field values from the current segment are copied into the new segment and the new segment is inserted. The newly inserted segment becomes the new current segment.
- If you do specify RCD-TYPE-VALUE-1 and 2 operands, File-AID for IMS verifies that the operands are valid values specified in the segment/layout XREF. File-AID for IMS initializes the new segment on the Key Specification screen based on the segment layout specified in the segment/layout XREF. The rcd-type-value-1 and 2 values you enter are pre-formatted into the new segment. The new segment is inserted into the database and becomes the new current segment.
- If the RCD-TYPE-VALUE-1 and 2 operands you specify do not exist in the segment/layout XREF but a default or other segment layout was specified in the XREF, the default segment layout is used to initialize the new segment on the Key Specification screen. The rcd-type-value-1 and 2 values you enter are preformatted into the new segment. The new segment is inserted in the database and becomes the new current segment.
- When your current position is on any segment type other than the one you want to insert, you must enter the SEGMENT-NAME operand. Anytime you enter the SEGMENT-NAME operand for a multiple record type segment while in formatted mode you must also enter RCD-TYPE-VALUE-1 and 2 operand values. File-AID for IMS then initializes the new segment on the Key Specification screen based on the segment layout specified in the segment/layout XREF and pre-formats the rcd-type-value-1 and 2 field values as described above, inserts the segment, and positions on it.

Note: Although the RCD-TYPE-VALUE-1 and 2 operands were described together in the preceding paragraphs, you can have multiple record type segments that are defined with only rcd-type-value-1 values. Refer to Chapter 9, “Segment/Layout Cross-Reference” for a complete explanation of the use of record type values.

The segment layout used to initialize a segment can also affect the length assigned to the segment. When inserting a fixed length segment, the length assigned is always the length defined for the segment in the DBD. If the segment layout assigned to the fixed length segment is shorter than the segment, the message LAYOUT TOO SHORT is displayed, and the segment is not inserted. If the segment layout is longer than the segment, the message LAYOUT TOO LONG is displayed, and the segment is not inserted.

When inserting a variable length segment, the associated segment layout is validated to verify that its length is within the segment length range defined in the DBD. If the layout is shorter than the minimum segment length or longer than the maximum segment length, the insert is not performed. If the segment layout length is valid, its length is assigned to the inserted segment.

Inserting a Single Record Type Segment (Unformatted Mode)

In Unformatted mode, the INSERT command works the same as described on page 11-27 for a single record type segment (one defined by a single segment layout), except that an unformatted insert is performed. In an unformatted insert, all nonkey field data is initialized with blanks (HEX 40s) on the Key Specification screen.

When inserting a fixed length single record type segment, the length assigned is always the length defined for the segment in the DBD.

When inserting a variable length single record type segment, the length assigned is always the minimum length defined for the segment. The existence or validity of a segment layout for a single record type segment has no impact in Unformatted mode.

Inserting a Multiple Record Type Segment (Unformatted Mode)

When inserting a multiple record type segment (one defined by multiple segment layouts) in Unformatted mode, specification of the INSERT command operands is determined by your current segment position, as follows:

- When positioned on an occurrence of the segment type that you want to insert, you need not specify any INSERT command operands. File-AID for IMS performs an unformatted insert. Because the new segment contains blanks instead of valid record type values (unless you defined blanks as valid record type values in the segment/layout XREF or entered valid record type values on the Key Specification screen), no segment layout is associated with the new segment. If you switch to Formatted mode while positioned on this segment, a blank screen body with an error message is displayed.
- If you do specify RCD-TYPE-VALUE-1 and 2 operands, File-AID for IMS verifies that the operands are valid values specified in the segment/layout XREF. File-AID for IMS initializes the new segment on the Key Specification screen based on the segment layout specified in the segment/layout XREF. The record type values you enter are pre-formatted into the new segment before the segment is inserted.
- If the RCD-TYPE-VALUE-1 and 2 operands you specify do not exist in the segment/layout XREF but a default (or other) segment layout has been specified in the XREF, File-AID for IMS uses the default segment layout to initialize the new segment on the Key Specification screen. The record type values you enter are pre-formatted into the new segment before the segment is inserted.
- When your current position is on any segment type other than the segment type you want to insert, you must enter the SEGMENT-NAME operand. Specification of the RCD-TYPE-VALUE-1 and 2 operands is optional. File-AID for IMS performs the insert in the same way described above, whether or not record type value operands are entered.

Note: Although the RCD-TYPE-VALUE-1 and 2 operands were described together in the preceding paragraphs, you can have multiple record type segments that are defined with only rcd-type-value-1 values. Refer to Chapter 9, “Segment/Layout Cross-Reference” for a complete explanation of the use of record type values.

When inserting a fixed length multiple record type segment, the length assigned is always the length defined for the segment in the DBD. Because formatted inserting is performed for a multiple record type segment while in Unformatted mode, the associated segment layout must pass validation before the insert is completed. If the layout is

shorter than the segment, the error message LAYOUT TOO SHORT is displayed. If the layout is longer than the segment, the error message LAYOUT TOO LONG is displayed. In both instances, the insert is not performed.

When inserting a variable length multiple record type segment, the length assigned depends on the segment layout associated with the segment. The segment layout is validated to verify that its length is within the segment length range. If the layout is shorter than the minimum segment length or longer than the maximum segment length, the insert is not performed. If the layout length is valid, its length is assigned to the new segment occurrence.

Additional information on how variable length segments can be edited in Unformatted mode is presented on page 4-83.

Adding DBDs to Segment/Layout XREF

During insert processing all segments defined in the DBD are added to the XREF. The newly inserted DBD is added in alphabetical order by DBD name and the XREF Segment List screen is automatically scrolled to the inserted DBD. The segment names defined in the DBD are prefilled in the Segment field of the screen. Because concatenated and logical child segments are automatically identified during insert processing, *CONCAT* or *LCHILD* is displayed in the Member field for those segments. Otherwise, the segment names defined in the DBD are prefilled in the Member field. How to specify segment layout information for concatenated and logical child segments and segments with multiple formats is described in Chapter 9, “Segment/Layout Cross-Reference”.

You can add as many DBDs to a single segment/layout XREF as you want, however, future enhancements to File-AID for IMS will require that you define only one DBD per XREF member and that the XREF member name matches the DBD name. Message I615 is displayed when an INSERT command is issued to warn you of this.

```
>>-┬INSERT┬──┬──────────┬──┬──────────────────────────────────────┬──>>
   └I──────┘  └segment-name┘  ├rcd-type-value-1──┬──────────────┬──┤
                                │                 └rcd-type-value-2──┘  │
                                ├'rcd-type-value-1'─┬──────────────┬──┤
                                │                 └'rcd-type-value-2'┘  │
                                ├"rcd-type-value-1"─┬──────────────┬──┤
                                │                 └"rcd-type-value-2"┘  │
                                └x'rcd-type-value-1'─┬──────────────┬──┘
                                                     └x'rcd-type-value-2'┘
```

JCL

The JCL command is used in the Initialize, Extract, Load, and Print functions to allow editing of the Job Control Language generated by File-AID for IMS/ISPF.

```
>>──JCL──────────────────────────────────────────────────────────────>>
```

KEY

The KEY command is used to change the position in a database from the current segment position to any other segment position.

If you enter the KEY command without a SEGMENT-NAME operand, the Key Specification screen is displayed based on your current hierarchical path and segment position. For example, if your current segment type is at the third level of the database,

the Key Specification screen enables you to specify any key value for each segment type in the hierarchical path to that current segment type.

When you use the SEGMENT-NAME operand with the KEY command, the segment name you enter must be one that is defined in the primary DBD you entered on the Data Base Specification screen. The Key Specification screen displayed is based on the current hierarchical path and the position of the segment whose name you entered within the database hierarchy.

For example, assume your current segment type is on the second hierarchical level of a database and you enter the KEY command with the name of a segment type that is on the fourth hierarchical level. Although the current hierarchical path extends only as far as the second level in the database, the Key Specification screen enables you to specify key values down to and including the specified segment type on the fourth level.

Refer to page 4-53 for a more detailed explanation and examples of how to use the Key Specification screen.

When you complete the Key Specification screen for the new segment you want, the segment is retrieved from the database and you are returned to the editing mode from which you entered the KEY command. The new segment becomes the current segment position.

The KEY command is not supported when you browse an HSAM or SHSAM database.

```
>>──┬KEY──┬──┬──────────────┬──────────────────────────────────────────────>◄
    └K────┘  └segment-name──┘
```

*KEYS

The KEYS command causes an immediate display of a screen where the current PF key definitions are displayed and modifiable. This command is equivalent to Option 0.3 of ISPF/PDF.

```
>>──KEY──────────────────────────────────────────────────────────────────>◄
```

*LEFT

The LEFT command causes scrolling towards the left margin of the displayed segments. Left scrolling is enabled on the Browse/Edit Character, Hierarchy Display, Member List, and Bookmark screens. See Chapter 4, “Browse/Edit” for more information on using the LEFT command on these screens.

Note: The LEFT command optional parameters are not functional on the Member List screen.

Refer to “Scrolling” on page 1-13 for a detailed discussion of the LEFT command and its operands.

```
>>-LEFT-+-------------+-------------------------------------------------------><
        |-n-----------|
        |-+-PAGE-+----|
        | |-P-----|   |
        |-+-DATA-+----|
        | |-D-----|   |
        |-+-HALF-+----|
        | |-H-----|   |
        |-+-MAX-+-----|
        | |-M-----|   |
        |-+-CUR-+-----|
        | |-CSR-|     |
        | |-C-----|   |
```

LOCATE

The LOCATE command scrolls directly to a specified line number, segment layout data-name, member name, and bookmark-name. If the line number entered exceeds the number of displayable lines, a line that designates the end of the scrollable lines is displayed. You can use an abbreviation for the data-name. If the abbreviation applies to more than one segment layout line, scrolling is to the first one that the abbreviation applies to based on the current cursor position. If you enter a member name that is not found, the last existing entry in the member list that alphabetically precedes the entered member name is displayed at the top of the screen.

```
>>-┬LOCATE──┬──┬line-number──┬──────────────────────────────────────────>◄
   ├LOC─────┤  ├data-name────┤
   └L───────┘  ├member-name──┤
               └bookmark-name┘
```

When you enter a data-name, File-AID for IMS scrolls the screen body of the display to the line in the segment layout that contains that data-name. The data-name can be up to 30 characters or can be abbreviated. If the abbreviation applies to more than one data-name, File-AID for IMS scrolls to the first line in the segment layout that applies based on the current cursor position.

For example, assume that three data-names in the segment layout start with the characters XYZ on lines one, five, and eight. If you enter LOCATE XYZ, move the cursor to line three, and press enter, File-AID for IMS scrolls line number five to the top of the screen body. If the data-name or abbreviation you enter does not exist between the line the cursor is positioned on and the end of the segment layout, File-AID for IMS wraps around and resumes the LOCATE processing with line number one.

You can also specify an occurrence number with the data-name (or abbreviation) for occurring fields. For example, LOCATE XYZ(3).

You can use the LINE-NUMBER operand with the LOCATE command in either formatted or unformatted mode. Entering the LINE-NUMBER operand causes File-AID for IMS to scroll the screen body of the display to that line number in the segment layout. The line number must be in the range 1 to 2,147,483,647.

If the line number you enter is greater than the line number of the last segment layout line, File-AID for IMS scrolls to the last line in the layout.

The **bookmark-name** operand can be used on the Bookmark screen to scroll directly to the specified bookmark.

MARK

The MARK command enables you to name a database location for future reference.

```
>>-┬MARK──┬──┬──────────────┬──────────────────────────────────────────>◄
   ├MK────┤  └bookmark-name─┘
   └M─────┘
```

MIXED

The MIXED command changes the display format to a mixture of DBCS (Double-Byte Character Set) and EBCDIC (Single-Byte Character Set) strings.

```
>>-┬MIXED-┬-------------------------------------------------------------><
   └MIX---┘
```

NEXT

The NEXT command enables you to change your position in a database from the current segment position to any segment occurrence in the database after the current segment and before the end of the database.

The NEXT command disregards parentage and hierarchical boundaries during its processing. If you enter the NEXT command without any operands, File-AID for IMS retrieves the next segment occurrence in the database. The new current segment may or may not be the same type as the previous current segment.

The integer occurrence operand, *n*, can range from 1 to 2,147,483,647. For example, if you enter NEXT 12, File-AID for IMS retrieves the twelfth segment that exists after the current segment, regardless of segment type and parentage. If the integer occurrence operand is larger than the number of segment occurrences that exist after the current segment, the BOTTOM OF DATA BASE message is displayed. If you enter the NEXT command again at this point, File-AID for IMS/ISPF's NEXT processing wraps around and starts at the beginning of the database.

Entering the SEGMENT-NAME operand for the NEXT command restricts the NEXT processing to the segment type you enter. For example, if you enter NEXT 7 ORDR030, File-AID for IMS retrieves the seventh occurrence of the ORDR030 segment type that exists after the current segment. If only four occurrences of the ORDR030 segment type exist after the current segment, the BOTTOM OF DATA BASE message is displayed. You can then enter another NEXT command to continue NEXT processing from the top of the database.

```
>>-┬NEXT-┬-┬-┬-┬-------------------------------------------------------><
   └NX---┘ └n┘ └segment-name┘
```

*PANELID

The PANELID command causes all subsequent screens to be displayed with or without the panel identifier shown in the upper left corner of the screen.

```
                ┌ON--┐
>>--PANELID-----┼----┼-------------------------------------------------><
                └OFF-┘
```

PARENT

The PARENT command enables you to change your position in a database from the current segment position to any higher-level segment in the current hierarchical path.

If you enter the PARENT command without the SEGMENT-NAME operand, the immediate parent of the current segment is retrieved and becomes the new current segment.

If you specify the SEGMENT-NAME operand with the PARENT command, the segment named must be a hierarchical parent of the current segment. The parent you specify is retrieved and becomes the new current segment.

If the parent segment name you specify is not defined in the primary DBD or is not a hierarchical parent of the current segment, an error is returned.

The PARENT command is invalid when the current segment occurrence is a root segment type.

Refer to page 4-82 for information on how the PARENT command is affected by nonkeyed and nonunique segments.

```
>>──┬─PARENT──┬──┬──────────────────────────────────────────────────────────────>◄
    └─PAR─────┘  └─segment-name─┘
```

*PFSHOW

The PFSHOW command displays the current PF key definitions at the bottom of the screen.

```
                ┌─ON─────┐
>>──PFSHOW──────┼─OFF────┼──────────────────────────────────────────────────────>◄
                └─TAILOR─┘
```

PLI

The PLI command causes the current language mode to change to PL/I, which enables you to view formatted segment layouts that were declared using PL/I attributes.

```
>>──┬─PLI──┬──────────────────────────────────────────────────────────────────>◄
    ├─PL/I─┤
    ├─PL1──┤
    └─PL/1─┘
```

File-AID for IMS/ISPF maintains separate concatenations of COBOL and PL/I layouts and cross-reference datasets. These concatenations automatically toggle between the COBOL and PL/I sets when you enter the COBOL or PLI command. Layouts and cross-reference datasets that you have entered for use with COBOL are kept separate from those you have entered for PL/I.

*PRINT

The PRINT command causes a snapshot of the current screen to be recorded in the ISPF list file for subsequent printing.

```
>>──PRINT──────────────────────────────────────────────────────────────────────>◄
```

*PRINT-HI

The PRINT_HI command is the same as the PRINT command except that high-intensity characters on the screen are printed with overstrikes to simulate the high-intensity display.

```
►►──PRINT - HI──────────────────────────────────────────────────►◄
```

*PRINTL

The PRINTL command causes a snapshot of the current logical screen to be recorded in the ISPF list file.

```
►►──PRINTL──────────────────────────────────────────────────────►◄
```

*PRINTLHI

The PRINTLHI command is the same as the PRINTL command except that high-intensity characters are printed with overstrikes to simulate high-intensity display.

```
►►──PRINTLHI────────────────────────────────────────────────────►◄
```

PRT

The PRT command displays the File-AID for IMS Print Parameters screen, where you can specify certain data display options for File-AID for IMS reports. This command terminates the current screen processing. When you exit the Print Parameters screen, you're returned to the File-AID for IMS Primary Options Menu, where you can select the desired option.

```
►►──PRT─────────────────────────────────────────────────────────►◄
```

RCHANGE

For information on the RCHANGE primary command, refer to "CHANGE and RCHANGE" on page 11-2.

RECOVERY (Edit only)

The RECOVERY command helps you minimize the number of database updates lost due to a system failure.

RECOVERY ON causes File-AID for IMS/ISPF to issue a DL/I checkpoint call after every *n* database update calls. When a checkpoint call is made, DL/I writes all its changed

database buffers, which forces all updated segments to be written to the database datasets.

RECOVERY OFF prevents File-AID for IMS/ISPF from automatically issuing any checkpoint calls. Therefore, DL/I writes its buffers only when they are full.

If you enter the RECOVERY command without any operands, the default is ON and the checkpoint interval *n* is set to one. If you enter a checkpoint interval, it can range from 1 to 2,147,483,647.

When initially entering the Data Base Location screen, File-AID for IMS/ISPF sets RECOVERY OFF. RECOVERY remains off throughout the editing session unless you turn it on with the RECOVERY command.

Refer to page 4-82 for information on how the RECOVERY command is affected by nonkeyed and nonunique segments.

```
                  ┌ON──┐
►►──RECOVERY──────┤    ├──┬──┬──────────────────────────────────────►
                  └OFF─┘  └n─┘
```

REFRESH (Edit only)

The REFRESH command is used to retrieve the most current version of the segment you are updating. When the Integrity Check feature is active and the segment has been updated by a concurrent user, the REFRESH command is required. After issuing the REFRESH command, the current version of the segment replaces any changes you made. REFRESH is valid for BMP region type only.

```
►►──┬REFRESH──┬──────────────────────────────────────────────────────►◄
    └REF──────┘
```

RELATIONSHIP

In selection criteria, the RELATIONSHIP command accesses the Relationship Specification screen (page 8-29), where you can then exclude and limit selection of application and/or logically related databases.

```
►►──┬RELATIONSHIP──┬──────────────────────────────────────────────────►◄
    ├RELATION──────┤
    ├RELAT─────────┤
    └REL───────────┘
```

REPEAT (Edit only)

The REPEAT command enables you to repeat a single segment occurrence or an entire hierarchical substructure of a database.

When you enter the REPEAT command, the Key Specification screen is displayed. This screen displays the key values for each segment type in the current hierarchical path from the root segment to the current segment, along with the current segment's data fields (using either segment layout data-names or File-AID for IMS-generated generic data-names, depending on whether a valid layout is found). By typing over these key and

data field values, you specify the fully concatenated key and the data fields for the new segment to be created.

When specifying the new, fully concatenated key, you have many alternatives. If you enter a new key value for the current segment type but leave the key values for the parent segments as is, a new segment occurrence is inserted into the database under the current parents. The new segment is a twin of the current segment.

If you enter new key values for any of the parent segments, the key values must be for parent segments that already exist in the database. If the parent segments exist, the new segment is inserted under those parents. If one or more of the parent segments do not exist, the error message HIGHER LEVEL SEGMENT NOT FOUND is displayed. You do not necessarily need to specify a new key value for the repeated segment when you want the repeated segment inserted under a different parent segment.

After you specify the fully concatenated key for the new segment, press Enter on the Key Specification screen. You are returned to the editing mode from which you started and positioned on the newly inserted segment.

Adding the ALL operand to the REPEAT command has no affect on the procedure just described. The ALL operand causes all occurrences of the hierarchically dependent child segments to also be repeated. These children are inserted under the new current segment with the same key and data values they have under the previous current segment. The ALL operand, in effect, repeats an entire substructure of the database.

Refer to page 4-82 for information on how the REPEAT command is affected by nonkeyed, nonunique, and key-only segments.

```
>>─┬─REPEAT─┬─┬─────┬──────────────────────────────────────────────────────────>◄
   └─R──────┘ └─ALL──┘
```

*RESET

The RESET command is used to remove all segment exclusions on the Browse/Edit Exclude Segment Specification screen.

```
>>─┬─RESET─┬──────────────────────────────────────────────────────────────────>◄
   └─RES───┘
```

RESTORE

The RESTORE command restores the default settings on the File-AID for IMS 0.3 panel, which is the IMS Parameters screen.

```
>>──RESTORE──────────────────────────────────────────────────────────────────>◄
```

*RETRIEVE

The RETRIEVE command recalls previously entered commands to the command line.

```
>>──RETRIEVE──────────────────────────────────────────────────────────────────>◄
```

*RETURN

The RETURN command causes an immediate return to the Primary Option Menu or to the option specified, if any.

For example, if you enter RETURN 7 or =7 from the Formatted screen, the next screen displayed is the Segment/Layout XREF Dataset Specification screen for Option 7, the Segment/Layout Cross-Reference function.

```
>>--RETURN--+-------+-------------------------------------------------->
            +-option-+
```

RFIND

For information on the RFIND primary command, refer to “FIND and RFIND” on page 11-13.

RIGHT

The RIGHT command causes scrolling towards the right margin of the displayed segments. Right scrolling is enabled on the Browse/Edit Character, Hierarchy Display, Member List, and Bookmark screens. See Chapter 4, “Browse/Edit” for more information on using the RIGHT command on these screens.

Note: The RIGHT command optional parameters are not functional on the Member List screen.

Refer to “Scrolling” on page 1-13 for a detailed discussion of the RIGHT command and its operands.

```
>>--RIGHT--+-------+-------------------------------------------------->
           +-n-----+
           +-PAGE--+
           +-P-----+
           +-DATA--+
           +-D-----+
           +-HALF--+
           +-H-----+
           +-MAX---+
           +-M-----+
           +-CUR---+
           +-CSR---+
           +-C-----+
```

ROOT

The ROOT command enables you to change your position in a database from the current segment position to either the root segment in the current hierarchical path or the first root segment in the database.

If you enter the ROOT command without the FIRST operand, File-AID for IMS retrieves the root segment in the current hierarchical path. Adding the FIRST operand to the

ROOT command causes File-AID for IMS to retrieve the first root segment occurrence in the database.

```
>>──ROOT──┬──────┬──────────────────────────────────────────────────────────>
          ├FIRST─┤
          └F─────┘
```

SAVE

When editing a database, the SAVE command causes File-AID for IMS to immediately issue a DL/I checkpoint call. When editing a segment/layout XREF or a selection criteria file, SAVE causes the data to be stored back into the dataset or member.

For a partitioned dataset member, the member is rewritten with the same name and the library statistics for the member are updated.

The SAVE command does not terminate the selection criteria edit session. You normally terminate selection criteria edit by entering the RETURN command. The RETURN command causes a SAVE to be issued before termination if any changes were made since the selection criteria file was last saved.

```
>>──SAVE──────────────────────────────────────────────────────────────────>
```

SEGMENT

The SEGMENT command accesses the Segment Criteria - Segment List screen (Figure 8-5 on page 8-8) from any screen within the selection criteria option.

```
>>──┬SEGMENT──┬──────────────────────────────────────────────────────────────>
    └SEG──────┘
```

*SELECT

Entered from any member list display screen, the SELECT command is used to select a given member for processing.

The SELECT command can also be used on the Bookmark screen, which enables you to select the desired bookmark and displays the segment associated with it.

```
>>──┬SELECT──┬──── name ──────────────────────────────────────────────────────>
    ├SEL─────┤
    └S───────┘
```

SORT

The SORT command is used on the Bookmark screen, which enables you to toggle the display between bookmark name and order sort.

```
►►──SORT──────────────────────────────────────────────────────►◄
```

SPLIT

The SPLIT command causes split screen mode to be entered or changes the location of the split line. The position of the split line depends on the cursor location at the time the command is entered.

```
►►──SPLIT──────────────────────────────────────────────────────►◄
```

*SWAP

The SWAP command positions the cursor to wherever it was previously located on the other logical screen of a split screen pair.

```
►►──SWAP───────────────────────────────────────────────────────►◄
```

SYS

The SYS command displays the File-AID for IMS System Parameters screen, where you can modify the language mode, data format, PSB processing, CAPS mode, and CODEPAGE options. This command terminates the current screen processing. When you exit the System Parameters screen, you're returned to the File-AID for IMS Primary Option Menu, where you can select the desired option.

```
►►──SYS────────────────────────────────────────────────────────►◄
```

*TSO

The TSO command enables you to enter a TSO command or CLIST from the Command or Option field of any screen.

```
►►──TSO────────────────────────────────────────────────────────►◄
```

TWIN

The TWIN command enables you to change your position in a database from the current segment position to another occurrence of the current segment type under the current parent.

```
>>-┬TWIN-┬-┬-------┬-------------------------------------------------------><
   └TW----┘ ├n------┤
            ├┬FIRST┬┤
            │└F----┘│
            ├┬LAST-┬┤
            │└L----┘│
            └┬MAX--┬┘
             └M----┘
```

If you enter the TWIN command without an occurrence operand, File-AID for IMS retrieves the next occurrence of the current segment type under the same parent. If no other occurrence of the current segment type exists under the same parent, the message POSITIONED BEYOND TWINS is displayed. This message is issued to notify you that you are positioned beyond the last twin occurrence of the current segment type under the current parent and on a hierarchical boundary.

When positioned on a hierarchical boundary, you can enter the TWIN command again. File-AID for IMS then crosses the hierarchical boundary, retrieves the next occurrence of the current segment type that exists, and displays the message SEGMENT UNDER NEW PARENT. This message is issued to notify you that you crossed a hierarchical boundary and are positioned on the first occurrence of the current segment type under a new parent.

If you enter the TWIN command while positioned on a hierarchical boundary and no more twin occurrences of the current segment type exist in the database, the message BOTTOM OF DATA BASE is displayed. You can then use the NEXT command to wrap around to the top of the database. The integer occurrence operand *n* can range from 1 to 2,147,483,647. By using it with the TWIN command, you can skip over twin occurrences under the current parent to reach the specific twin occurrence you want.

For example, assume you are positioned on the first twin occurrence of a segment type under the current parent, and you want to change your current position to the fifth occurrence of the same segment type under the same parent. You can enter four separate TWIN commands, or you can enter TWIN 4.

If you enter the TWIN command with an integer occurrence operand value that is greater than the number of remaining occurrences of the current segment under the current parent, File-AID for IMS stops at the hierarchical boundary and displays the message POSITIONED BEYOND TWINS. You can then cross the hierarchical boundary by specifying the TWIN command again, with or without the integer occurrence operand. It is possible, when positioned on a hierarchical boundary, to enter TWIN *n* to go directly to the next hierarchical boundary in the database. If *n* is larger than the number of occurrences of the current segment type under the next parent, you skip over all twin occurrences under the next parent and go directly to the next hierarchical boundary.

Other valid TWIN command occurrence operands are FIRST, LAST, and MAX. TWIN FIRST positions you to the first twin occurrence of the current segment type under the current parent. TWIN LAST and TWIN MAX position you to the last twin occurrence of the current segment type under the current parent. When you specify one of these three occurrence operands, File-AID for IMS prevents you from crossing a hierarchical boundary. You can retrieve only the first or last twin occurrence of the current segment under the current parent with these operands. The LAST and MAX operands are invalid when you are positioned on the root segment type.

The FIRST, LAST, and MAX occurrence operands are useful when you unintentionally position yourself on a hierarchical boundary.

For example, assume you are positioned on the first twin occurrence of the current segment type under the current parent. You enter TWIN 5 to change your current position to the sixth twin occurrence of the current segment type under the current parent. If only four occurrences of the current segment type exist under the current parent, you are positioned on a hierarchical boundary. At this point, you can reposition yourself using the FIRST, LAST, or MAX operand with the TWIN command.

UNFORMAT

In the browse/edit option, the UNFORMAT command switches from Formatted or Character mode to Unformatted mode. In the Character mode, which displays several segments per screen, the first segment shown is selected for unformatted display.

```
>>-┬UNFORMAT┬-------------------------------------------------------------><
   └UNFMT   ┘
```

*UP

The UP command enables you to scroll towards the top of a segment, database, segment layout, member list, and bookmarks list by the specified scroll amount.

The UP command is enabled on the Browse/Edit Formatted, Unformatted, and Character screens. It is also enabled on the Member List and Bookmark screens. See Chapter 4, “Browse/Edit” for information on using the UP command on these screens.

Refer to “Scrolling” on page 1-13 for a detailed discussion of the UP command and its operands.

```
>>--UP--------┬-------------┬-------------------------------------------><
              ├-n-----------┤
              ├┬PAGE-------┬┤
              │└P----------┘│
              ├┬DATA-------┬┤
              │└D----------┘│
              ├┬HALF-------┬┤
              │└H----------┘│
              ├┬MAX--------┬┤
              │└M----------┘│
              └┬CUR--------┬┘
               ├CSR--------┤
               └C----------┘
```

VIEW

The VIEW command displays a browse screen with all of the File-AID for IMS system configuration settings and dataset concatenations in effect for the current session. You can use this command on any File-AID for IMS screen except those that are displayed when the product is attached to IMS. You can use this command to generate a printed report showing the combined effect of the user-controlled session overrides and the underlying values set through the selection of a particular IMS environment. When

processing for this command is completed, entering the END command or pressing PF3/PF15 (default), returns you to the screen where you entered the VIEW command.

```
►►──VIEW──────────────────────────────────────────────────────────►
```

XPSB

The XPSB command switches to and from dynamic and static variations of File-AID for IMS screens regarding PSB processing. If dynamic and static PSB processing are supported in the current environment, you can enter the XPSB command on either screen to switch to the alternate screen. If only one of these modes is allowed, the XPSB command results in the display of a message indicating that the alternate type of PSB is not supported in the current environment.

```
►►──XPSB──────────────────────────────────────────────────►◄
```

ZOOM

The ZOOM command enables you to view entire concatenated key and record type values and edit field values within a segment occurrence based on a specified layout.

```
►►──ZOOM──────────────────────────────────────────────────►◄
```

ZOOMH

The ZOOMH command enables you to view entire concatenated key and record type values and edit field values in a scrollable panel in three-line vertical hexadecimal format.

```
►►──ZOOMH──────────────────────────────────────────────────►◄
```

Chapter 12.
Line Commands

This chapter describes the line commands available in File-AID for IMS/ISPF windows. Commands are listed alphabetically with syntax and techniques for using them.

Following is a list of File-AID for IMS line commands with a brief explanation of each command's function and the screens where the line command can be used. For a more detailed explanation of a command, refer to the chapter that covers the functions and screens where the command is used.

C (Copy)

The C (Copy) line command enables you to copy an environment on the Administration option Select Environment screen. You must specify a new name in the field to the right of the Name field.

D (Delete)

The D (Delete) line command can be used on the:

- Edit Character screen to delete a segment and its dependents.
- Edit XREF Segment List screen to delete a segment from the XREF.
- Edit XREF Record Type 1 screen to delete a record type value 1 entry.
- Edit XREF Record Type 2 screen to delete a record type value 2 entry.
- Application Relationship Segment List and Target Specification screens to delete a target DBD from the application relationship.

  Dn Deletes n target DBDs.

- Field Criteria Set List and Field Criteria List screens to delete a field criteria set or a field criterion.

  Dn Deletes n field criteria sets or n field criterion.

- Character screen to delete segment occurrences from a database. You can enter the D line command in the Line Command field of any segment displayed on the screen. When you enter D in a segment's Line Command field, the segment and all dependent segment occurrences are deleted. If you delete the first segment displayed (the current segment), the next segment occurrence that is not a dependent of the first segment becomes the new first segment displayed (the new current segment). If you delete the last segment displayed, the next segment occurrence that is not a dependent of the last segment appears on the last segment line.
- Administration option Select Environment screen to delete an environment definition.
- Administration option Dataset Concatenation screen to delete a dataset entry in a concatenation list defined for an environment.
- Bookmark screen to delete bookmarks.

I (Insert)

The I (Insert) line command enables you to insert a single occurrence of any segment type displayed on the Character screen. You can enter the I line command in the Line Command field of any segment displayed on the screen. The segment type you insert is restricted to the segment type on the segment line where you enter the command. After you enter an I and press Enter, the Key Specification screen is displayed on which you specify the fully concatenated key of the segment to be inserted along with the segment's data fields. When you leave the Key Specification screen and return to the Character screen, the new segment is inserted in the database.

The execution of an insert line command does not cause your current segment position to change. If the newly inserted segment fits on the display under the current segment, the new segment is displayed when you return to the Character screen. The fully concatenated key you specified on the Key Specification screen determines whether the newly inserted segment fits on the display. If the new segment does not fit on the current hierarchy displayed, the segment is inserted in the database but not displayed on the Character screen.

When inserting a segment, File-AID for IMS first attempts to do a formatted insert (as described in "INSERT (Edit only)" on page 11-27). The following cases prevent File-AID for IMS from performing a formatted insert:

- If N was specified in the Use Layouts field on the Data Base Specification screen.
- If no segment layout was specified in the segment/layout cross-reference dataset for the segment type to be inserted.
- If the segment layout specified in the segment/layout XREF for the segment type to be inserted has a syntax error.
- If a multiple record type segment (one defined by multiple segment layouts) is inserted, File-AID for IMS validates the record type values contained in the segment on the line where you entered the I command. If the record type values are valid, the corresponding segment layout specified in the segment/layout XREF is used for a formatted insert and the record type values are pre-formatted in the new segment. If the record type values are not valid, the formatted insert is not performed.
- If the segment to be inserted is fixed length and the corresponding segment layout does not match the segment's length.
- If the segment to be inserted is variable length and the corresponding segment layout is either shorter than the segment's minimum length or longer than the segment's maximum length.

When File-AID for IMS cannot perform a formatted insert of the new segment, it performs an unformatted insert as described in "INSERT (Edit only)" on page 11-27.

The I line command can be used on the:

- Edit Character screen to insert a new segment occurrence in a database.
- Edit XREF Segment List screen to add a segment to the XREF.
- Field Criteria Set List and Field Criteria List screens to insert a field criteria set or a field criterion.

  In Inserts n field criteria sets or n field criterion.

- Application Relationship Target Specification screen to insert a target DBD into the application relationship.

  In Inserts n target DBDs.

- Administration option Dataset Concatenation screen to insert a dataset entry in a concatenation list defined for an environment.

K (Key)

The K (Key) line command enables you to change your position in a database from the current segment position to any other segment position. You can enter the K line command in the Line Command field of any segment displayed on the Character screen.

If you enter a K and press Enter, the Key Specification screen is displayed, which shows you the key values for each segment type in the hierarchical path to the segment where you entered the K. On the Key Specification screen, you can specify key values for any of the displayed key value fields. You are able to reposition only to another occurrence of the same segment type as the segment where you entered the K.

Upon returning to the Character screen, the segment with the fully concatenated key you specified becomes the new current segment displayed on the first line of the screen body.

Refer to “Key Specification” on page 4-53 for more information.

The K line command can be used on the:

- Data Base Location and Bookmark screens to invoke the Key Specification screen, which enables you to specify keys and then switch to Formatted mode.
- Browse/Edit Character screen to invoke the Key Specification screen.

KC (Key - Character mode)

The KC (Key - Character mode) line command is used on the Data Base Location and Bookmark screens to invoke the Key Specification screen, which enables you to specify keys and then switch to Character mode.

KU (Key - Unformatted mode)

The KU (Key - Unformatted mode) line command is used on the Data Base Location Bookmark screens to invoke the Key Specification screen, which enables you to specify keys and then switch to Unformatted mode.

MK (Mark - Character mode)

The MK (Mark - Character mode) line command is used on the Browse/Edit Character screen to invoke the Bookmark screen (using the database location associated with the segment for which the command was issued), which enables you to bookmark the selected segment.

R (Rename)

The R (Rename) line command enables you to rename an environment on the Administration option Select Environment screen. You must specify the new name in the field to the right of the Name field.

The R line command can also be used on the Bookmark screen to rename a bookmark.

R (Repeat)

The R (Repeat) line command enables you to repeat any single segment occurrence in a database. You can enter the R line command in the Line Command field of any segment displayed on the screen. The segment line where you enter the R is the segment occurrence that is repeated.

If you enter an R and press Enter, the Key Specification screen is displayed. The key values for each segment type in the hierarchical path to the segment where you entered the R along with that segment's data fields are shown. On the Key Specification screen, you can specify the fully concatenated key along with any data fields for the new segment to be created. When you return to the Character screen, the new segment is inserted.

Your current position does not change when you execute an R line command in Character mode. When you return to the Edit Character screen from the Key Specification screen, the newly created segment may or may not be displayed, depending on the fully concatenated key you specified.

The R line command can be used on the:

- Character screen to repeat a segment occurrence, which creates a segment with a new fully concatenated key and copied data.
- Field Criteria Set List and Field Criteria List screens to repeat a field criteria set or a field criterion.

  Rn Repeats n field criteria sets or n field criterion.

- Application Relationship Target Specification screen to repeat a target DBD in the application relationship.

  Rn Repeats n target DBDs.

- Administration option Dataset Concatenation screen to repeat a dataset entry in a concatenation list defined for an environment.

RA (Repeat All)

The RA (Repeat All) line command enables you to repeat any hierarchical substructure in a database. You can enter the RA line command in the Line Command field of any segment displayed on the screen, including a root segment. The segment line where you enter the RA is the parent of the hierarchical substructure that is to be repeated.

If you enter RA and press Enter, the Key Specification screen is displayed. The key values for each segment type in the hierarchical path to the segment where you entered the RA along with that segment's data fields are shown. On the Key Specification screen, you can specify the fully concatenated key for the parent of the new hierarchical substructure to be created and type over the segment's data fields as required. When you return to the Character screen, the new parent segment and its substructure are inserted. All data in the children under the new parent is copied from the children under the segment where you entered the RA.

Your current position does not change when you execute an RA line command in Character mode. When you return to the Character screen, the newly created parent segment may or may not be displayed, as well as some or all of its children, depending on the fully concatenated key you specified.

The RA line command is used on the Character screen to repeat a parent segment occurrence and all its dependent segments. The new parent segment has a new fully

concatenated key and copied data. The new dependent segments have copied keys and data.

S (Select)

The S (Select) line command can be used on the:

- Data Base Location screen to select a segment for formatted browsing/editing.
- Browse/Edit Character screen to select a segment for formatted browsing/editing.
- Member List screens to select a member for processing.
- Edit XREF Segment List screen to select a multiple record type segment for record type value 1 processing.
- EDIT XREF Record Type 1 screen to select a record type value 1 entry for record type value 2 processing.
- Application Relationship Segment List screen to select a source segment for constructing target root keys.
- Field Criteria Set List, Field Criteria List, and Segment Criteria - Segment List screens to select a field criteria set, a field criterion, or a segment criterion.
- DBD/PCB Selection List screen to select a DBD/PCB to be used by File-AID for IMS during the browse/edit and extract/load processes.
- Character screen to select any segment occurrence and switch to Formatted mode with that segment. When you enter Formatted mode with your selected segment, that segment becomes the new current segment.
- Select IMS Environment screen to select an environment for processing.
- Administration option Select Environment screen to select an environment for updating.
- View Dataset Concatenations screen and the Administration option Dataset Concatenation screen to recall a migrated dataset or to display the text of an error message.
- Bookmark screen to select a bookmarked segment for formatted browsing/editing.

SC (Select - Character mode)

The SC (Select - Character mode) line command is used on the Data Base Location screen to select a segment for character browsing/editing.

The SC line command can also be used on the Bookmark screen to select a bookmarked segment for character browsing/editing.

SU (Select Unformatted)

The SU (Select Unformatted) line command enables you to select any segment occurrence on the Character screen and switch to Unformatted mode with that segment. When you enter Unformatted mode with your selected segment, that segment becomes the new current segment.

The SU line command can be used on the:

- Data Base Location and Browse/Edit Character screens to select a segment for unformatted browsing/editing.

- Bookmark screen to select a bookmarked segment for unformatted browsing/editing.

V (View)

The V (View) line command is used on the Select IMS Environment screen to view a Browse panel that displays the values of current configuration settings and system datasets defined within the selected environment.

X (Exclude)

The X (Exclude) line command indicates which lines are to be excluded from the display. Excluded lines are replaced by a single message line that indicates the number of lines and characters excluded from the display. A repetition factor can also be specified to indicate the number of lines to be excluded. You can exclude a block of lines by entering XX on the first and last lines of the block to be excluded. display. Excluded lines are replaced by a single message line that indicates the number of lines and characters excluded from the display. A repetition factor can also be specified to indicate the number of lines to be excluded. You can exclude a block of lines by entering XX on the first and last lines of the block to be excluded.

X	Exclude one line
Xn	Exclude n lines
XX	Exclude a block of lines

The X line command can be used on the:

- Browse/Edit Exclude Segment Specification screen to indicate which segment types in the primary DBD are to be excluded from further processing. The repetition factor n and the block command XX are not valid on this screen.
- Selection criteria's Relationship Specification screen to indicate which links from a source DBD to a target DBD are to be excluded in the selection criteria. The repetition factor n and the block command XX are not valid on this screen.
- Formatted Criteria screen to exclude fields after an EXCLUDE primary command has been issued.

Chapter 13. Tutorial

Option T, Tutorial, provides online documentation that describes the uses of File-AID for IMS/ISPF. You can invoke the tutorial in one of the following ways:

- Enter T on the Primary Option Menu or enter the "=T" jump command from most screens.
- Enter the HELP command on any screen when a message is not displayed.
- Enter the HELP command twice after a message is displayed. The first HELP command causes the extended message to be displayed and the second causes the tutorial to be accessed.

The File-AID for IMS/ISPF tutorial operates similarly to the ISPF/PDF tutorial. That is, to move about in the File-AID for IMS/ISPF tutorial, you use the same commands that you use in the ISPF/PDF tutorial described on the following pages.

If you invoke the tutorial with Option T or =T, the screen shown in Figure 13-1 is displayed.

Figure 13-1. Tutorial Introduction - First Screen

```
File-AID for IMS -------------------- INTRODUCTION ------------------- TUTORIAL
COMMAND ===>

                          File-AID for IMS/ISPF TUTORIAL


  This tutorial provides on-line information about the use of File-AID for
  IMS/ISPF.  It is organized hierarchically for sequential view or you may
  select topics from lists that are displayed on many of the tutorial pages.

  The table of contents contains a list of the major topics.  Each topic
  contains additional lists that lead you to lower levels of detail.  You
  may also select topics from the tutorial index which is in alphabetical
  sequence.

  The next two pages contain a description of how to use the tutorial.

      Press the ENTER key to proceed to the next page, or
      Enter the UP command to go directly to the table of contents, or
      Enter the END command to return to the primary option menu.
```

Press Enter to view the next two screens of the tutorial introduction. These screens explain how to move about in the tutorial.

Figure 13-2. Tutorial Introduction - Second Screen

```
FAI TUTORIAL -------------- INTRODUCTION (CONTINUED) ------------- FAI TUTORIAL
COMMAND ===>


  Leaving the command field blank and repeatedly pressing the ENTER key,
  will enable you to view the tutorial sequentially. To select topics from
  the list that are displayed on many of the tutorial pages, enter the
  topic number in the command/option field on line 2 of the screen. i.e.

     OPTION  ===> 1    (to select topic 1)

  You may also enter one of the following commands on any tutorial page:

     BACK  or B - to back up to the previously viewed page.
     SKIP  or S - to skip the current topic and go on to the next topic.
     UP    or U - to display a higher level list of topics.
     TOP   or T - to display the table of contents.
     INDEX or I - to display the tutorial index.

                          (continued on next page)
```

Figure 13-3. Tutorial Introduction - Third Screen

```
FAI TUTORIAL -------------- INTRODUCTION (CONTINUED) ------------- FAI TUTORIAL
COMMAND ===>

                                                       DEFAULT ASSIGNMENT
                                                         FOR PF KEY PAD
To move about in the tutorial you may use the      |--------|--------|--------|
following commands (the default PF key assignment  |  HELP  |        |  END   |
for each command is shown to the right):           | PF1 or |        | PF3 or |
                                                   |  PF13  |        |  PF15  |
  HELP  - to get help on how to use the tutorial.  |--------|--------|--------|
  END   - to end the tutorial.                     |        |        |        |
  UP    - to display a higher level page.          |        |        |        |
  DOWN  - to go on to the next topic (skip).       |        |        |        |
  LEFT  - to display the previous page (back).     |--------|--------|--------|
  RIGHT - to display the next page (next), which   |   UP   |  DOWN  |        |
          is the same as pressing ENTER.           | PF7 or | PF8 or |        |
                                                   |  PF19  |  PF20  |        |
  Note:   Default PF key assignments are not       |--------|--------|--------|
          provided for the LEFT and RIGHT          |        |        |        |
          commands.                                |        |        |        |
                                                   |        |        |        |
                                                   |--------|--------|--------|
```

If you enter the HELP command to invoke the tutorial, the appropriate section of the tutorial is displayed based on what you were doing when you requested HELP. If you enter the HELP command on the Primary Option Menu, the Table of Contents screen is displayed. You can also use the TOC command on any screen in the tutorial to display the screen.

While in the tutorial, you can enter the HELP command at any time to display a one-screen summary of how to use the tutorial.

To terminate the tutorial, enter the END command. You are returned to the screen where you requested help. You cannot use the RETURN or jump commands to terminate the tutorial.

Figure 13-4. Tutorial Introduction - Table of Contents

```
FAI TUTORIAL ----------------- TABLE OF CONTENTS ----------------- FAI TUTORIAL
OPTION  ===>
                      ====================================
                         File-AID for IMS/ISPF TUTORIAL
                      ====================================

 The following topics are presented in sequence or may be selected by entering
 a one character code (listed in high intensity) in the option field.

------------------------------- TABLE OF CONTENTS -------------------------------
               T  -  Notices
               N  -  features new in this release
               G  -  general information about File-AID for IMS/ISPF
               O  -  specify File-AID for IMS user parameters
               1  -  browsing the contents of an IMS data base
               2  -  editing the contents of an IMS data base
               3  -  perform utility functions
               4  -  extract/load data base contents
               5  -  print an audit trail
               6  -  edit selection criteria
               7  -  edit the segment layout cross-reference
               9  -  edit application relationships
               F  -  FLEX statements and JCL generation
               M  -  more help: glossary, command summary, and index
```

Glossary

ACB. Application Control Block

AGN. Application Group Name

Application Control Block (ACB). A control block generated by IMS that consists of a combination of Data Base Descriptors and Program Specification Block required for BMP and MPP application programs.

Application Group Name (AGN). Identifies the IMS resources that can be used by a dependent (BMP) region.

application relationship. A File-AID for IMS-defined relationship between one segment and the root segment of another data base.

Basic Mapping Support (BMS). A CICS edit facility that allows application programs to manage data streams independent of devices, thus simplifying the application development process.

batch. The capability to access and update IMS data bases and MVS files that are not under the control of the IMS on-line control region. A batch program is started with Job Control Language (JCL).

Batch Message Processing (BMP). An IMS batch processing program that has access to on-line data bases and message queues. BMPs run on-line but, like programs in a batch environment, they are started with Job Control Language (JCL).

BMP. Batch Message Processing

BMS. Basic Mapping Support

browse. To retrieve and view segments within a data base without updating them.

browse mode. To be in any of the collection of screens in File-AID for IMS/ISPF Option 1, File-AID for IMS/DC Option 1, or File-AID for IMS/CICS Option 1, Browse Data Base.

bytes operand (RMNAME). An operand on the RMNAME= parameter in the DBD statement that specifies the maximum number of bytes of a data base record to be stored in the root addressable area in a series of ISRT calls.

BYTES parameter (SEGM). A parameter on the SEGM statement that specifies the segment length in bytes.

Character mode. To browse and edit a data base where the screen displays segments in hierarchical sequence, with one segment per line in character format.

chasing relationships. When extracting from a data base, the process that extracts all logically related and application related data base records.

checkpoint (CHKP). A DL/I call that creates an IMS sync point. Causes data base buffers to be written and the physical data base residing on disk to be updated, reflecting all changes that were made.

checkpoint id. A unique eight-character identifier associated with each sync point created by a DL/I CHKP call. In File-AID for IMS/ISPF, the checkpoint id syntax is "IXnnnnnn," where "nnnnnn" starts at 000000 and is incremented by one with each CHKP call.

checkpoint interval. The number of data base updates (through segment insertion, deletion, or replacement) that occur between DL/I CHKP calls. Set through the RECOVERY command in File-AID for IMS/ISPF edit and through File-AID for IMS/ISPF installation parameters for batch load jobs.

child segment. A segment that is hierarchically subordinate to another segment.

CICS. Customer Information Control System

command level. Instructions that interface with CICS and resemble high-level programming language statements. Makes the interface to CICS easier to code than macro statements.

concatenated key. The key of a segment preceded by the key(s) of all higher-level segments in its hierarchical path.

concatenated segment. A segment defined in a logical DBD that consists of logical child data, followed by destination parent data.

control table. A group of information that defines the configuration of the CICS system. CICS uses several control tables.

current hierarchical path. The "top to bottom" sequence of segments leading from the current segment's root to the current segment.

current segment. The specific segment occurrence in a data base where you are currently positioned.

Customer Information Control System (CICS).

A program product that enables transactions entered at remote terminals to be processed concurrently by user-written application programs.

data base. A collection of interrelated data elements.

data base dataset name. The dataset name of an ISAM, OSAM, or VSAM dataset that contains data base data.

Data Base Description (DBD). In DL/I, a set of statements that names and defines the segments and their hierarchy in a data base.

data base hierarchy. See hierarchical structure.

data base record. A root segment and all its dependents.

Data Base Recovery Control (DBRC). A part of IMS that maintains information required for data base recoveries and logging control.

Data Entry Data Base (DEDB). A data base type provided by the Fast Path feature. It resembles an HDAM data base.

data-name. The name within a segment layout that identifies a data field in a segment.

DBD. Data Base Description

DBDLIB. A DASD library that contains Data Base Description control blocks.

DBDLIB dataset name. The dataset name of the DBD load library that contains the DBD load module(s) that defines the data base(s) to be accessed.

DBRC. Data Base Recovery Control

DD name. The Data Definition name, which consists of one to eight characters, used to identify datasets.

DEDB. Data Entry Data Base

dependent region. The MVS virtual storage region that contains MPPs, BMPs, or on-line utilities.

dependent segment. A segment that is hierarchically subordinate to another segment.

destination parent. A logical relationship may be used to cross between the physical parent and logical parent. The destination parent is the parent segment crossed "to" in a specific logical structure.

Destination Parent Concatenated Key (DPCK).

The key of a destination parent preceded by the key(s) of all higher level segments in its hierarchical path. A logical child or concatenated segment, as returned by IMS to an application program's I/O area, always starts with the DPCK.

DL/I. Data Language/I. The access language used to issue requests to IMS.

edit. To retrieve and view segments within a data base while updating them.

edit mode. To be in any of the collection of screens in File-AID for IMS/ISPF Option 2, File-AID for IMS/DC Option 2, or File-AID for IMS/CICS Option 2, Edit Data Base.

external DBD. A DBD that is related to the primary DBD being used through a logical relationship or a secondary index.

Fast Path. IMS optional feature that consists of Data Entry Data Bases (DEDBs), Main Storage Data Bases (MSDBs), the Expedited Message Handler (EMH), and IMS Fast Path (IFP) message regions.

FCT. File Control Table

File Control Table (FCT). A table that contains attributes of the files accessed by CICS.

Formatted mode. To use existing segment layouts to define segment data for browsing and editing a data base.

hierarchical boundary. A logical dividing line between a parent segment and its dependent segments and the next parent and its dependents.

hierarchical level number. The number associated with a segment's level in a data base hierarchy. A root segment is always at hierarchical level one.

hierarchical path. The "top to bottom" sequence of segments leading from a segment's root to the segment.

hierarchical sequence. The order in which IMS retrieves segments in "Get Next" processing; top to bottom and left to right within a data base record.

hierarchical structure. As defined in a DBD, the overall parent/child relationships between the segment types in a data base.

hierarchical substructure. A subset of a hierarchical structure that involves some but not all the segment types in a data base.

IMS/DC. The data communication (DC) component of IMS that allows programs to communicate with remote terminals in an on-line, real-time environment.

IMS. Information Management System.

IRC. Inter-Region Communication

ISPF. Interactive System Productivity Facility

ISPF/PDF. ISPF/Program Development Facility

key. The sequence field value used to access a segment occurrence in a data base. Analogous to key value.

key field. The name assigned in a DBD to identify a sequence field for a segment.

key-only segment. A segment defined in a logical DBD that has the KEY operand specified for its SOURCE= keyword. When IMS retrieves a key-only segment, the segment's key is placed in the PCB key feedback area, but no segment data is returned to the I/O area.

keyed segment. A segment defined in a DBD with a unique or nonunique sequence field.

log dataset. The dataset allocated to the IEFRDER DD name. As segments in a data base are inserted, deleted, and replaced, IMS writes a detailed record of the update activity to the log dataset. Used as input to a data base recovery procedure.

logical child segment. A dependent segment that has two parents - one logical and one physical. When IMS retrieves a logical child segment, it places the destination parent concatenated key, followed by the logical child data, in the I/O area.

logical data base. A set of hierarchically related segments composed of one or more physical data bases whose structured relationships can be different from the physical structure in which the segments were loaded.

logical DBD. A DBD that defines a logical view of one or more interrelated physical data bases.

logical parent segment. The parent segment of a logical child that establishes the logical relationship.

logical terminal (LTERM). Names a logical device that is associated with one or more physical terminals.

LTERM. Logical terminal

map. A screen of data and/or literals in CICS.

mapset. A group of related maps.

Message Format Service (MFS). An IMS/DC editing facility that allows application programs to deal with simple logical messages instead of device dependent data, thus simplifying the application development process.

Message Processing Program (MPP). An IMS application program that is driven by transactions and has access to on-line IMS data bases and message queues.

message queue. The dataset where messages are queued before being processed by an application program or sent to a terminal.

MFS. Message Format Service

MPP. Message Processing Program

multiple record type segment. A segment defined in the segment/layout XREF as having multiple segment layouts to define the segment data.

nonconversational. A type of transaction that allows only one input message and one response back to the terminal at a time.

nonkeyed segment. A segment defined in a DBD without a sequence field. Analogous to a nonsequenced segment.

nonunique segment. A segment defined in a DBD that allows duplicate values for its sequence field.

on-line. The capability for input to be entered via communication devices connected directly or remotely to a computer.

OSCOR. OS Core. An area of space within the CICS region that is reserved for operating system use. File-AID for IMS/CICS does not use OSCOR.

pageable link pack area (PLPA). A common area in storage that contains common system routines, SVC handlers, and other selected programs. All code in the PLPA is reentrant.

parent segment. A segment that is at a higher level in the hierarchical path to another segment.

PCB. Program Communication Block

PCT. Program Control Table

physical data base. An ordered physical set of hierarchically related segments.

PLPA. Pageable Link Pack Area

PPT. Processing Program Table

primary dataset group. The first or only dataset group defined. The root segment always resides in the primary dataset group.

primary DBD. The DBD that defines the main data base being browsed, edited, extracted, or loaded.

Processing Program Table (PPT). A table that contains attributes of all application programs that are valid for processing under CICS.

PROCOPT. A parameter on the SENSEG and PCB statements that identifies the type of processing that can be performed on a segment.

Program Specification Block (PSB). In IMS, a set of statements that name the required data bases, segments to be accessed, and data base processing options for an application.

Program Communication Block (PCB). A collection of information related to a program and used by IMS to determine which data base or terminal is referred to and to return the results of the input/output operation to the program.

Program Control Table (PCT). A table that contains attributes of all transactions that are available for processing under CICS.

PSB. Program Specification Block

PSBLIB. A DASD library that contains Program Specification Blocks.

pseudoconversational. A series of CICS transactions that appear to the operator as a continuous conversation.

queue. To store messages in preparation to execute application programs that process the messages.

randomizer. A routine that converts a root-key value into the actual location within the data base where that root segment is stored.

RAP. Root Anchor Point

RBN. Relative Block Number

real logical child segment. A logical child segment in its physical data base.

RECON. Recovery Control

record type value 1. The value of a data field as defined in the segment/layout XREF that identifies the segment layout to be used with a segment.

record type value 2. The value of a second data field as defined in the segment/layout XREF that is combined with the record type value 1 to identify the segment layout to be used with a segment.

Recovery Control (RECON) datasets. Datasets in which Data Base Recovery Control (DBRC) stores information about logging activity and events that might affect the recovery of data bases.

reentrant. Code that is not changed while in use is said to be reentrant.

related DBD. See external DBD.

relational operator. Specified on the Key Specification screen for each segment in the hierarchical path to the target segment. Indicates to IMS how the key values specified are to be compared with the keys of the segments in the data base, as IMS searches for the target segment. In selection criteria, indicates to File-AID for IMS/ISPF how the values specified are to be compared with the data in the root segments when extracting a subset of a data base.

Relative Block Number (RBN). The number of blocks or CIs in the root addressable area.

resource definition. The process that identifies to CICS which resources to use, what the properties are, and how CICS can use them. The information created is stored in control tables.

Response Mode. When response mode is in effect, the terminal is unusable (the keyboard locks) until the program has processed the transaction and sent a reply back to the terminal.

Root Addressable Area. For HDAM data bases, contains the root segments and is the primary storage area for dependent segments in a data base record.

Root Anchor Point (RAP). A four-byte field in the root addressable area that contains the address of a root segment.

root segment. The highest level segment in a data base record.

SDEP. Sequential Dependent

secondary dataset group. The dataset group or groups defined in addition to the primary dataset group.

secondary index. An index into a data base for a specific segment type. Allows the indexed segment type to be accessed in an order other than that defined by its key.

segment. The basic grouping of data in an IMS data base. May be defined as fixed or variable in length and may contain one or more logically related data fields.

segment name. The one to eight character name defined in a DBD to identify and reference a segment type.

segment occurrence. A specific instance of a segment type in a data base.

Segment Search Argument (SSA). A series of values in an application program that identifies the segment name, key or search field, and comparative value that the program is to retrieve, add, change, or delete.

segment size field. The first two bytes of a variable length segment that contain the segment's current length, including the first two bytes.

segment type. A segment defined in a DBD and uniquely identified by the segment name.

segment/layout XREF. See XREF.

SENSEG. A statement in a PCB that identifies the segments in a data base that an application is sensitive to.

Sequential Dependent. A segment type for DEDB data bases.

Shared Data Base Program. A batch program that has access to CICS on-line data bases. A shared data base program is started with Job Control Language (JCL).

single record type segment. A segment defined in the segment/layout XREF as having one segment layout that defines the segment data.

SIT. System Initialization Table

source segment. The segment type that contains the field(s) used to retrieve the root segment of another data base in a data base that has an application relationship.

In a data base that has a secondary index, the segment type that contains the field(s) that the secondary index uses as its key field.

SSA. Segment Search Argument

starting data-name. The segment layout field name defined in the segment/layout XREF that identifies the logical beginning of the appropriate segment layout for a segment. Used when multiple segment layouts are contained in one source library member or when the segment layout is hard-coded in a COBOL or PL/I program.

subordinate segment. See dependent segment.

sync point. A point where the updates to a data base are written from the data base buffers to the data base dataset. File-AID for IMS/ISPF sync points are forced by DL/I CHKP calls (which are controlled by the RECOVERY and SAVE commands in edit and by installation parameters for the batch load job). These File-AID for IMS/ISPF sync points provide a reference point where a data base can be restored.

System Initialization Table (SIT). A table that contains parameters that are defined to CICS during system startup.

target segment. The segment occurrence about to be inserted, deleted, or retrieved by File-AID for IMS.

transaction. A specific set of input data that triggers the execution of a specific process or job. A transaction is a message destined for an application program.

transaction code. In IMS/DC, a one to eight character alphameric code that invokes an IMS message processing program. In CICS, a one to four character alphameric code that invokes the program defined in the PCT entry.

twin segment. Different occurrences of the same segment type under the same parent segment.

Unformatted mode. To browse and edit a data base where a segment's contents are displayed in hexadecimal or character format.

unload format. The format of the Extract "TO"/Load "FROM" file created by the extract

function. This format ensures that the data base is loaded correctly during the load function.

user profile. A dataset that contains information specific to a given user, such as data base dataset names, PF key definitions, scroll amounts, and terminal characteristics.

virtual logical child segment. A dependent of a logical parent segment defined in bidirectional virtual logical relationships. A virtual logical child segment does not physically exist, but merely represents a real logical child segment.

XREF. Cross-reference. Used in File-AID for IMS/ISPF to associate segment layouts with the appropriate segment types.

Index

A

abends
  abnormal termination, 1-7–1-8
  IMS control program abend, 1-9
  system abend codes, 1-8
  unrecoverable error, 1-7
ACB (application control block), 1-6
ACB parameters
  modifying, 2-36
ACBLIB, 5-2
ACCESS statement, 6-64
ACF
  See security
Acrobat PDF online documentation, xxiii
adjusting string length, 11-3
ADM command, 11-1
Administration menu, 2-11
Administration option
  environments, 2-21
  GLOBAL, 2-11
  menu, 2-10
  training files, 2-49
  user exits, 2-42
ALL operand, 11-4
ANY operand, 11-4
application relationship (option 9)
  creating, example of, 10-8
  dataset
    organization, 3-6
    specification, 10-1
  DBD load library dataset name, 10-2
  error summary, 10-2
  primary commands, 10-5
  segment list, 10-3
  source segment exit module, 10-6
  target DBD specification, 10-5
  validation errors, 10-2
application relationship exit option, 2-45
AREA statement, 6-64
array structures, PL/I, 4-32
ASMSEGXT, assembler segment control exit program, 2-48
asterisk (*) operand, 11-3
attention key (PA1), 1-16
audit trail
  about, 1-17
  activating, 4-75
  creating, 4-6
  dataset usage, 4-75
  disposition, 4-76
  generated JCL, editing, 7-3
  notes, 4-77
  printing
    batch stream, 7-4
    online conversation, 7-1
  report
    formatted, 7-7
    hexadecimal, 7-8
    summary information, 7-9
  retrieving from SMF, 7-4
  return codes, 7-5
  security exit routine, 1-17, 4-78
  SMF log file usage, 4-75

B

backout changes, 3-11
batch message processor
  See BMP region type
bidirectional relationship, 4-79–4-80
block size, 6-17
BMP parameters
  modifying, 2-34
BMP region type
  about, 4-3, 4-5
  data specification, 4-3
  PSB generation
    dynamic, 1-5
    static, 1-6
BookManager softcopy documentation, xxiii
Bookmark Options screen, 4-36
Bookmark screen, 4-38
  commands
    line, 4-40
    primary, 4-39
browse database (option 1), 4-1
BT (between) relational operator, 8-22

C

C (copy) line command, 12-1
CANCEL command
  character mode, 4-48–4-49
  formatted/unformatted mode, 11-1
CAPS command, 8-26
CHANGE command
  adjusting length of strings, 11-3
  controlling starting point, extent of change, 11-4
  operands, 11-3
  screen, 11-7
changes to File-AID for IMS/ISPF (option C), 1-4
CHAR command, 11-9
character edit mode
  commands
    line, 4-52
    primary, 4-49
  description, 4-3
  hierarchical substructure, repeating, 11-37
  screen description, 4-47
  segment occurrences
    changing position, 12-3
    deleting, 12-1
    inserting, 12-2
    repeating, 12-4
    selecting, 12-5

Character Mode screen
  character, 4-47
  hexadecimal, 4-48
chasing relationships, 8-31
checkpoint (CHKP)
  call, 11-36
  frequency, 2-7
CHILD
  command, 11-9
  operand, 11-5
child segments, 4-78
CO (contains) relational operator, 8-22
COBOL
  command, 11-10
  data format, 4-27
  language support
    alphanumeric fields, 4-29
    elementary data, 4-28
COBSEGXT, COBOL segment control exit program, 2-48
column boundaries, 11-6
commands
  bookmark, 4-39
  character mode, 4-49
  database location, 4-22
  entry, 1-15
  formatted mode, 4-35
  jump, 1-16
  key specification, 4-57
  line, 12-1
  line commands, 1-16
  primary, 11-1
  primary commands, 1-15
  selection criteria
    field criteria, 8-26
  stacking, 1-15
  unformatted mode, 4-45
  zoom edit, 4-23, 4-41, 4-46
  zoomh edit, 4-24, 4-42, 4-46, 8-26
concatenated key, 4-53
Concatenated Segment screen, 9-10
converting DEDB to HDAM, 6-64
criteria set, 8-14
cross-reference
  See segment/layout (option 7)
CURSOR command, 11-11
customer support web site, xxiii

D

D (delete) line command, 4-40, 4-52, 12-1
data
  formats, 2-4
Data Base Dataset Specification screen
  Application Relationship, 10-1
  Edit, 4-15, 4-68
  Extract, 6-14
  Initialize, 5-3
  Load (dynamic), 6-29
  Load (static), 6-31
  Load - DL/I, 6-39
  Segment/layout, 9-1
  Selection Criteria, 8-1
Data Base Extract Option Specification screen, 6-9
Data Base Initialization report, 5-15
Data Base Location screen, 4-18, 4-69
  primary commands, 4-22
Data Base Specification screen
  Edit
    dynamic PSB, 4-4
    static PSB, 4-9
  Extract (dynamic), 6-3
  Extract (static), 6-5
  Initialize, 5-2
  secondary indexing, 4-65
data entry data base
  See DEDB
data-name
  boundary, 11-6
database description (DBD) dataset, 3-3
databases
  accessing online, 1-4
  browsing, 4-1
  comparing, 6-63
  dataset attributes, 3-2
  editing, 4-1
  extracting, 6-2
  initializing, 5-1
  loading, 6-28
  location, 4-3
  occurrences to chase, 8-31
  security, 1-6
  specifying, 4-2
  updating, DLI processing options, 6-29
dataset concatenation support
  described, 3-1
  special considerations, 3-2
  viewing concatenations, 3-1
dataset concatenations
  modifying, 2-38
datasets
  application relationship, 3-6
  attributes, 3-2
  audit trail, 4-77
  database ddnames
    DBD, 3-9
    DFSRESLB, 3-8
    DFSVSAMP, 3-8
    IEFRDER, 3-9
    IMS, 3-7
    RECON, 3-8
  dataset name, 4-16
  disposition, 6-17
  extract to/load from, 3-6
  list file, 3-6
  log file, 3-6
  organization, 3-3
  password protection, 3-3
  required
    File-AID for IMS/ISPF, 3-2
    IMS, 3-7
  segment layout, 3-4–3-5
  selection criteria, 3-6–3-8
  temporary, 3-2
  user profile, 3-6
DBCS
  command, 8-26, 11-11
  data format, 2-5
DBD (Data Base Description)
  adding to XREF, 9-4
  DD, 3-9
  external, 4-16
  logical, 4-80
  maintaining in XREF, 9-6

DBD (Database Description)
dataset attributes, 3-3
DBD Segment Information Screen, 11-21
DBD Selection List for Static PSB screen, 4-12
DBDELETE
Initialize, 5-13
Load, 6-52
DBEXTRCT, 6-24
DBINIT, 5-12
DBLOAD, 6-51
DBRC (Database Recovery Control), 3-8
DEDB
converting to HDAM, 6-64
description, 8-28
DL/I access method, 2-4, 3-3
initializing, 5-2
delete rules, logical relationship, 4-79
destination parent concatenated key (DPCK), 4-80, 4-83, 9-8, 9-11
DFS627I message, 4-24
DFSRESLIB DD concatenation, 3-8
DFSVSAMP DD concatenation, 3-8
direct access processing, 8-26
DL/I
access
methods supported, 3-3
to online databases, 1-4
calls
CHKP (checkpoint), 1-7
DLET (delete), 4-77
GN (get next), 4-81, 6-54
GU (get unique), 6-54
ISRT (insert), 4-80
REPL (replace), 4-80
DL/I Log Usage screen, 6-37
DL/I parameters
modifying, 2-31
DL/I region type
about, 4-5
database specification, 4-3
log usage, 6-37
PSB generation
dynamic, 1-5
static, 1-6
double-byte character set support (DBCS), 2-4, 11-3
DOWN command, 4-39, 4-49, 11-11
DSN command, 11-12
dynamic PSB
See PSB (program specification block)

E

EBCDIC
command, 8-26, 11-12
data format, 2-5
edit character mode
See character edit mode
edit compression facility, 4-84
edit conversation flow
database location, 4-3
database specification, 4-2
edit database (option 2)
about, 4-1
audit trail
See audit trail
BMP
See BMP region type
commands, 4-25
conversation flow, 4-1
DBD selection list, 4-12
DL/I
See DL/I region type
empty database, 4-22
excluding
lines, 4-34
segments, 4-5, 4-14
IMS log dataset
log dataset, 4-7
optional functions, 4-78
PSB, specifying
dynamic, 4-4
static, 4-9
secondary indexing
See secondary indexing
See key specification
See segments
segment layouts, using, 4-5
static PSB, 4-9
string occurrences
adjusting length, 11-3
changing, 11-2, 11-7
repeating, 11-7
edit formatted mode
See formatted edit mode
edit unformatted mode
See unformatted edit mode
elementary data, 4-28
empty database, 4-22
ENV command, 11-13
EQ (equal to) relational operator, 4-55
error messages
DFS627I, 4-24
display format, 1-10
segment layout, 8-4
Error Summary screen
Application Relationship, 10-2
Selection Criteria, 8-4
EXCLUDE command
description, 8-26, 11-13
edit formatted, 4-34
selection criteria, 8-30
Exclude Segment Specification screen, 4-14
excluding
lines, 4-34
segments, 4-5, 4-14
exit
See security, exits
external DBD
Edit, 4-16
Extract, 6-15
Load, 6-40
extract (option 4)
advanced topics
changing DBD, 6-62
comparing databases, 6-63
converting DEDB to HDAM, 6-64
extract to/load from file, 6-55
extracting roots with nonunique keys, 6-58
extracting SDEP segment type, 6-64
processing flow, 6-54
reorganizing databases, 6-60
batch stream, 6-19
block size, 6-17
BMP

See BMP region type
database specification, 6-2
dataset
disposition, 6-17
names, 6-14
DBEXTRCT step, 6-24
DL/I
See DL/I region type
external DBDs, 6-15
file contents, 6-26
generated JCL, editing, 6-43
generic unit, 6-17
key values, 6-4, 6-6
online conversation, 6-2
processing flow, 6-54
report, 6-64
return codes, 6-26
RPTSTATS step, 6-25
selection criteria, creating and applying, 6-10
volser, 6-17
extract based on key values, 8-22, 8-25
Extract Option Specification screen, 6-9
extract to/load from dataset, 3-6
extract with keys from input file, 8-23, 8-25
Extract/Load Data Base Menu screen, 6-1

F

fast path DEDB, 6-64
field criteria, 8-12
Field Criteria List, 8-16
Field Criteria Set List Information screen, 8-12
Field Criteria Set List screen, 8-13
Field Criteria-Segment List screen, 8-15
Field Information screen, 11-25
field value, key specification, 4-55
File-AID for IMS/ISPF
datasets required, 3-2
invoking, 1-3
key features, 1-2
primary options, 1-3
terminating, 1-7
FIND Command screen, 11-14
FIND/CHANGE Message screen, 11-5
FIRST operand, 11-4
fixed length segment, 11-28
floating point data type, 4-27
FORMAT command, 11-16
Formatted Criteria screen, 8-21
formatted edit mode
commands
CHILD, 11-9
FPRINT, 11-16
INSERT, 11-27
primary, 4-35
data items
COBOL, 4-27
PL/I, 4-27
data presentation, 2-5
elementary item contents, 4-28
excluding lines, 4-34
notes, 4-43
printing segments, 11-16
screen description, 4-26
Formatted Mode screen
character, 4-26
hexadecimal, 4-33
secondary indexing, 4-69
Formatted Print Screen, 4-3, 11-16
FPRINT command, 11-16
FROM dataset, 6-30, 6-32
FrontLine support web site, xxiii

G

GE (greater than or equal to) relational operator, 4-55
generic unit, 6-17
GET operand, 11-4
GN (get next) call, 6-54, 6-57, 8-27
GOB command, 4-36, 4-45, 11-19
GOF command, 4-36, 4-45, 11-19
GOH/GOT command, 4-36, 4-45, 4-49, 11-19
GOL command, 4-36, 4-45, 11-19
GOM command, 4-36, 4-45, 4-49, 11-19
graphic display, 11-20
GSAM DL/I access method, 3-3
GT (greater than) relational operator, 4-55
GU (get unique) call, 6-54, 6-57, 8-27

H

HDAM
converting from DEDB, 6-64
DL/I access method, 3-3, 8-28
help
function, 1-15
HELP, 11-20
HELP command, 11-20
HEX command, 4-37, 4-49, 4-57, 11-20
hexadecimal
display
audit trail, 7-2, 7-8
XREF record type 1 entries, 9-13
XREF record type 2 entries, 9-16
string
entering in alphanumeric field, 4-29
entering in key field, 4-21
HIDAM DL/I access method, 8-27
hierarchical
boundary, 11-42
database substructure, repeating, 11-37
level number, 4-15
path, specifying key values, 4-20
sequence of segment types, 4-69
HIERARCHY command, 4-26, 4-47, 11-20
Hierarchy Display screen, 11-20
high-values, 8-22
HISAM DL/I access method, 3-3, 8-27
HSAM DL/I access method, 3-3, 8-28
HTML documentation, xxiii

I

I (insert) line command, 4-52, 12-2
IEFRDER DD, 3-9
IMS
abnormal termination, 1-7
backout utility, 3-11

datasets required by, 3-7
insert, delete, and replace rules, 4-79
log dataset, 4-7
logical relationships, 4-78
optional functions
key-only segments, 4-80
logical relationships, 4-78
nonkeyed/nonunique segments, 4-82
segment edit/compression facility, 4-84
variable length segments, 4-83
parameters, 2-6
parameters summary information, 2-52
required datasets, 3-7
select environment, 2-2
status codes, 1-9
user codes, 1-10
IMS command, 11-26
IMS DD concatenation, 3-7
IMS parameters
checkpoint interval, 2-7
IMS Parameters screen, 2-6
IMS system parameters
modifying, 2-28
INDEX
data type, 4-27
DL/I access method, 3-3
indexing, secondary
See secondary indexing
INFO command, 11-27
initialize database utility (option 4)
batch stream
about, 5-8
DBDELETE step, 5-13
DBINIT step, 5-12
return codes, 5-14
RPTSTATS step, 5-14
generated JCL, editing, 5-7
image copy sepcification, 5-5
online conversation
about, 5-1
database, 5-2
dataset, 5-3
JCL, 5-6
report, 5-15
INSERT command
Edit, 4-22, 11-27
insert rules, logical relationships, 4-79
Internet, Compuware WWW address, xxiv
INVALID operand, 11-4
invoking File-AID for IMS/ISPF, 1-3
ISAM organization, 3-3
IXPENV load module
assembling, 2-40
creating, 2-26
modifying, 2-21, 2-26
IXPGLOBL load module
assembling, 2-19, 2-50
modifying, 2-11

J

JCL
command, 11-30
extract database, 6-19
generated, editing
Initialize, 5-7
Load, 6-43
Print, 7-3
initialize database, 5-6
load database, 6-42, 6-44
print audit trail, batch, 7-4
PSB for backout job, 3-11
retrieve audit trail from SMF, 7-4
JCL Specification screen
Extract, 6-16
Initialize, 5-6
Load, 6-42
jump commands, 1-15

K

K (key) line command, 4-19, 4-40, 4-52, 12-3
KC (key-character mode) line command, 4-19, 4-40, 12-3
key
features, 1-2
segment
length, 4-20
value, 4-20
KEY command, 11-30
key file layout, 6-4, 6-6
key specification
commands
primary, 4-57
concatenated key, 4-53
copying
existing occurrence, 4-59
occurrence and dependents, 4-63
relational operators, 4-55
screen description, 4-53
key field values
character, 4-54
hexadecimal, 4-56
segments
inserting, 4-61
retrieving, 4-20, 4-54
keys
program access (PA1, PA2), 1-16
program function, 1-17
KEYS command, 1-16, 11-31
keys library
member, 6-4, 6-6
KU (key-unformatted mode) line command, 4-19, 4-40, 12-3

L

language
COBOL
See COBOL
mode, 2-4
PL/I
See PL/I
layouts, segment, 4-5
LE (less than or equal to) relational operator, 4-55
LEFT command, 4-39, 4-49, 11-31
length, segment, 4-15, 4-48, 8-24
level number
hierarchical, 4-15
line commands

See commands, line commands
list file dataset, 3-6
Load
Image Copy Specification, 6-41
load (option 4)
advanced topics
adding/deleting/changing segments, 6-62
changing DBD, 6-62
converting DEDB to HDAM, 6-64
extracting/loading VSAM KSDS file, 6-64
loading logically related paired segments, 6-59
loading segments with nonunique keys, 6-60
processing flow, 6-58
sorting load FROM file, 6-59
batch stream, 6-44
dataset
names, 6-30, 6-32
DBDELETE step, 6-52
DBLOAD step, 6-51
external DBDs, 6-40
FROM dataset name, 6-30, 6-32
generated JCL, editing, 6-43
JCL specification, 6-42
online conversation, 6-28
processing options
BMP, 6-39
DLI, 6-29
reports, 6-69
return codes, 6-53
RPTSTATS step, 6-53
volser, 6-30, 6-32
LOCATE command, 4-39, 11-33
log
dataset, 3-10, 4-7
file, 3-6
logical
child segments
about, 4-79, 9-8
editing, 9-8
rules, 4-79
selecting, 9-3
children, 6-60
DBD, 4-80
DL/I access methods, 3-3
parent, 6-58
relationships, 4-78, 8-30
Logical Child Segment screen, 9-8
Logical Relationship Information screen, 11-23
low-values, 8-22
LT (less than) relational operator, 4-55

M

MARK command, 4-37, 4-46, 4-49, 11-33
maximum print lines per page, 2-6
Member List screen, 4-8
messages
See error messages
MIXED
command, 8-26, 11-34
data format, 2-5
MK (mark-character mode) line command, 4-52, 12-3
modifying ACB parameters, 2-36
modifying BMP parameters, 2-34
modifying dataset concatenations, 2-38
modifying DL/I parameters, 2-31
modifying IMS system parameters, 2-28
modifying user exits, 2-42
MSDB DL/I access method, 3-3, 8-27
multiple record type segments, 11-28–11-29

N

Navigation Options screen, 4-51
NB (not between) relational operator, 8-22
NC (not contains) relational operator, 8-22
NE (not equal) relational operator, 4-55
NEXT
command, 11-34
operand, 11-4
non-displayable characters, 9-13
nonkeyed/nonunique segments, 4-82
NORCD operand, 11-5
NULLS, 4-48
numeric data types, 4-27

O

OCCURRENCE operand, 11-10
OCCURS clause, 4-32
online databases, accessing, 1-4
optional IMS functions, 4-78
OS password, 3-3
OSAM organization, 3-3
Other Record Type Value Specification screen, 8-19
OTHER record type values, 8-19

P

PA keys, 1-16
PANELID command, 11-34
parameters selection (option 0)
Administration, 2-10
IMS, 2-6
IMS environment, 2-2
parameters selection (option 0.I)
Information, 2-52
Parameters Selection Menu, 2-1
parameters summary information screen, 2-52
PARENT command, 11-34
parent segment, 4-78
password protection, 3-3
PCB (program communication block)
about, 1-5
name, 4-13
processing option, 4-13
PDF documentation, xxiii
PF key definitions, 1-16
PFSHOW command, 11-35
PL/I language support
arrays, 4-32
data types
elementary, 4-28
floating point, 4-27
PLI command, 11-35
PLISEGXT, PLI segment control exit program, 2-48
primary
commands

See commands, primary commands
option menu
about, 1-3
application relationship (option 9), 10-1
browse database (option 1), 4-1
changes to File-AID for IMS/ISPF (option C), 1-4
edit database (option 2), 4-1
extract/load database (option 4), 6-1
print (option 5), 7-1
segment/layout XREF (option 7), 9-1
selection criteria (option 6), 8-1
tutorial (option T), 13-1
utilities (option 3), 5-1
print
function (option 5)
See audit trail report
parameters, 2-5
Print Audit Trail screen, 7-1
PRINT command, 11-35
Print Selection Menu screen, 7-1
PRINT-HI command, 11-36
PRINTL command, 11-36
PRINTLHI command, 11-36
PROCOPT, 1-5
product support, xxiv
profile, user, 3-6
program
access keys, 1-16
function keys, 1-17
PRT command, 11-36
PSB (program specification block)
dynamic
advantages, 1-5
database specifications, 4-4
disadvantages, 1-5
generation, 1-5
PROCOPT, 1-5
static
advantages, 1-6
database specifications, 4-9
Extract, 6-5
generation, 1-6

R

R (rename) line command, 4-40, 12-3
R (repeat) line command, 4-52, 12-4
RA (repeat all) line command, 4-52, 12-4
RACF
See security
RCD operand, 11-5
RCHANGE command, 11-2, 11-7
RECON DD, 3-8
RECOVERY command, 11-36
REDEFINES clause, 4-32
REFRESH command, 11-37
region types
See BMP
See DL/I
relational operators, 4-55
relationship (option 9)
See application relationship (option 9)
Relationship Criteria screen, 8-29
Relationship Specification screen, 8-29
REPEAT command, 4-81, 11-37
replace rules, logical relationships, 4-79
reports
audit trail
about, 7-6
formatted, 7-7
hexadecimal, 7-8
summary information, 7-9
database extract, 6-64
database initialization, 5-15
database load, 6-69
RESET command, 8-26, 11-38
reshow key (PA2), 1-16
RESTORE command, 11-38
RETRIEVE command, 11-38
return codes
Extract, 6-26
Initialize, 5-14
Load, 6-53
Print, 7-5
RIGHT command, 4-39, 4-50, 11-39
RMNAME statement, 6-64
root segment, 6-54, 6-63, 8-26
RPTSTATS
Extract, 6-25
Initialize, 5-14
Load, 6-53

S

S (select) line command, 4-19, 4-40, 4-52, 12-5
sample segment control exit programs, 2-48
SAVE command, 11-40
SC (select-character mode) line command, 4-19, 4-40, 12-5
screen
format, 1-10
types
dataset specification, 1-11
member list, 1-12
option selection, 1-11
scrollable data display, 1-12
unscrollable data display, 1-13
screen descriptions
abnormal termination
about, 1-8
unrecoverable error, 1-8
Administration menu, 2-10, 11-1
Bookmark, 4-38
Bookmark Options, 4-36
CHANGE command, 11-7
Character Mode
character, 4-47
hexadecimal, 4-48
Concatenated Segment Entries, 9-10
Data Base Dataset Specification
Application Relationship, 10-1
Edit, 4-68
Extract, 6-14
Initialize, 5-3
Load (dynamic), 6-29
Load (static), 6-31
Load - DL/I, 6-39
Segment/Layout, 9-1
Selection Criteria, 8-1
Data Base Extract Option Specification, 6-9
Data Base Initialize Image Copy Specification, 5-5
Data Base Load Image Copy Specification, 6-41

Data Base Location, 4-18, 4-69
Data Base Specification
  Edit dynamic PSB, 4-4
  Edit static PSB, 4-9
  Extract (dynamic), 6-3
  Extract (static), 6-5
  Initialize, 5-2
  secondary indexing, 4-65
DBD Segment Information, 11-21
DBD Selection List for Static PSB, 4-12
DL/I Log Usage, 6-37
Error Summary
  Application Relationship, 10-2
  Selection Criteria, 8-4
Exclude Segment Specification, 4-14
Extract Option Specification, 6-9
Extract/Load Data Base Menu, 6-1
Field Criteria List, 8-16
Field Criteria Set List, 4-27–4-28, 8-13
Field Criteria Set List Information, 8-12
Field Criteria-Segment List, 8-15
Field Information, 11-25
File-AID for IMS - ADMIN Information Panel, 2-21, 2-42
File-AID for IMS - Application Relationship Exit Menu, 2-45
File-AID for IMS - Assemble IXPENV, 2-40
File-AID for IMS - Assemble IXPGLOBL, 2-19, 2-50
File-AID for IMS - Compile Application Relationship Exit, 2-46
File-AID for IMS - Compile Security Exit, 2-44
File-AID for IMS - Compile Segment Control Exit, 2-48
File-AID for IMS - Compile Segment Control Exit Table, 2-47
File-AID for IMS - Copy Sample Appl. Relationship Exit, 2-46
File-AID for IMS - Copy Sample Security Exit, 2-43
File-AID for IMS - Copy Sample Segment Control Exit, 2-48
File-AID for IMS - Copy Sample Segment Control Exit Table, 2-47
File-AID for IMS - Copy/Modify User Exits menu, 2-42
File-AID for IMS - Create IXPENV, 2-26
File-AID for IMS - Dataset Concatenation, 2-38
File-AID for IMS - Environment Definition menu, 2-21
File-AID for IMS - Modify ACB Parameters, 2-36
File-AID for IMS - Modify BMP Parameters, 2-34
File-AID for IMS - Modify DLI Parameters, 2-31
File-AID for IMS - Modify Environment menu, 2-27
File-AID for IMS - Modify IXPGLOBL, 2-11
File-AID for IMS - Restore Inactive Security Exit, 2-44
File-AID for IMS - Security Exit Option Menu, 2-43
File-AID for IMS - Segment Control Exit Menu, 2-46
File-AID for IMS - Select Environment, 2-24
File-AID for IMS - Training Files, 2-49
FIND command, 11-14
FIND/CHANGE Message, 3-7, 11-5
Formatted Criteria, 8-21
Formatted Mode
  character, 4-26
  hexadecimal, 4-33
  secondary indexing, 4-69
Formatted Print, 11-16
Hierarchy Display, 11-20
IMS Environment, 11-13
IMS Parameters, 2-6, 11-26
JCL Specification
  Extract, 6-16
  Initialize, 5-6
  Load, 6-42
Key Specification, 4-53
Logical Child Segment Entries, 9-8
Logical Relationship Information, 11-23
Member List, 4-8
Navigation Options, 4-51
Other Record Type Value Specification, 8-19
Parameters Selection Menu, 2-1
parameters summary information, 2-52
Primary Option Menu, 1-3
Print Audit Trail, 7-2
Print Parameters, 2-5, 11-36
Print Selection Menu, 7-1
Relationship Criteria, 8-29
Relationship Specification, 8-29
Secondary Index Data Base List, 4-67
Segment Criteria, 8-9
Segment Information, 11-24
Segment List
  Application Relationship, 10-3
  Segment/Layout, 9-2
  Selection Criteria, 8-8
Select IMS Environment, 2-2
Select Record Type Value, 8-18
Selection Criteria Menu, 8-6
Specify Disposition of Audit Trail, 4-76
System Parameters, 2-3, 11-41
Target DBD Specification, 10-5
Tutorial, 13-1
Unformatted Criteria, 8-23
Unformatted Mode
  character, 4-45
  hexadecimal, 4-43
UP Command Options, 4-50
Utility Selection Menu, 5-1
View Dataset Concatenations, 2-9, 11-12
Zoom Edit, 4-22, 4-41
Zoomh Edit, 4-23, 4-42
scrollable data display, 1-12
scrolling
  amount, 1-14
  commands, 1-13
SDEP (sequential dependent segment), 6-64
Secondary Index Data Base List screen, 4-67
secondary indexing
  about, 4-65
  database
    accessing, 4-67
    defining, 4-5
    listing, 4-68
  edit formatted, 4-69
  hierarchical sequence, 4-69
  inserting segment
    with generic layout, 4-72
    with segment layout, 4-71
  key specification, 4-70
  selecting, 4-68
  special considerations, 4-73
security
  exits
    audit trail, 4-78
    database, 1-6
    IMS log dataset allocation override, 3-9

software, 1-6
security exit option, 2-43
SEGMENT
operand, 11-4
segment control exit option, 2-46
Segment Information screen, 11-24
Segment List screen
Application Relationship, 10-3
Segment/Layout, 9-2
Selection Criteria, 8-8
SEGMENT-NAME operand, 11-27, 11-30
Segment/Layout
dataset, 3-4
XREF dataset, 3-5
segment/layout (option 7)
concatenated segment data, defining, 9-10
criteria set, editing, 8-14
dataset specification, 9-1
DBD
adding to XREF, 9-4
maintaining entry, 9-6
destination parent concatenated key
defining, 9-8
editing, 9-10
destination parent data, defining, 9-11
INSERT command, 11-30
line commands, 9-3
logical child segment data, 9-8
OTHER record specification, 9-13
record type 1 entries, 9-12
record type 2 entries, 9-14
segments
See segments
segments
adding, 6-62
changing
current position, 4-19, 11-30, 11-34
data, 6-60
from current to dependent (child), 11-9
from current to higher-level (parent), 11-34
from current to root, 11-39
length, 6-61
to another under current parent (twin), 11-42
to any other position, 11-34
to next occurrence, 11-34
child, 4-79
concatenated
key, 4-53, 6-63
segment, 4-79, 9-10
controlling
excluding, 4-5
extent of change, 11-4
range of change, 11-5
starting point, 11-4
deleting, 6-62, 11-11
dependent, 4-14
describing, 9-4
edit/compression facility, 4-84
fixed length, 11-28
hierarchical level number, 4-15
initialization of new, 11-27
inserting
about, 4-22
fixed length, 11-28
multiple record type, 11-28
single occurrences, 11-27
single record type, 11-28
with generic layout, 4-72
with segment layout, 4-71
key length, 4-20
key value, 4-19
layouts, using, 4-5
length, 4-15, 4-48, 4-83, 8-24
line-number, locating, 11-33
logical relationships, 4-78
maximum calls, 11-9
multiple record type, 11-28–11-29
nonkeyed/nonunique, 4-82
padding/truncating, 6-61
parent, 4-79
printing, 11-16
repeating, 11-37
replacing, 4-48
retrieving, 4-20, 4-54
root, accessing, 8-26
search, limiting, 11-6
selecting, 4-19, 8-7
single record type, 11-28
target type, 4-54
variable length, browsing/editing, 4-83
SELECT command, 4-39, 11-40
Select IMS Environment screen, 2-2
Select Record Type Value screen, 8-18
selection criteria (option 6)
application relationship, using, 8-2
applying criteria, 8-8
commands
FIELD, 11-13
RELATIONSHIP, 11-37
SEGMENT, 11-40
dataset specification, 8-1
direct access processing, 8-26
error messages, 8-4
existing, 8-1
extracting
children, 8-16
from input file, 8-23, 8-25
segments, 8-8, 8-15
field criteria, 8-12
primary commands, 8-26
record type value, 8-18–8-19
relationship specification, 8-29
segments
criteria, creating, 8-9
selection, controlling, 8-7, 8-21
selection interval
select within parent, 8-10
skip within parent, 8-10
temporary, 8-1, 8-6
validation errors, 8-5
selection criteria dataset, 3-7–3-8
selection criteria dataset concatenation, 3-6
Selection Criteria Menu screen, 8-6
SHISAM access method, 3-3, 8-27
SHSAM access method, 3-3, 8-28
single record type segment, 11-28
SMF
log file usage, 4-75
retrieving audit trail, 7-4
softcopy documentation, xxiii
SORT command, 4-39, 11-41
source segment exit module, 10-6
space units, 6-18
spacing before detailed headers, 2-6
Specify Disposition of Audit Trail screen, 4-76
SPLIT command, 11-41

split screen, 1-15
SSA (Segment Search Argument), 4-20, 4-55
starting data-name, 9-4
static PSB
  See PSB (program specification block)
string occurrences
  adjustment length, 11-3
  changing, 11-2, 11-7
  repeating, 11-7
SU (select-unformatted mode) line command, 4-19, 4-40, 4-52, 12-5
substructures, repeating, 4-81
SWAP command, 11-41
syntax conventions, xxii
syntax diagrams, xxii
SYS command, 11-41
system
  parameters, 2-3
system parameters
  CAPS mode, 2-4
  code page, 2-4
  data format, 2-4
  dynamic or static PSB, 2-4
  language mode, 2-4
system requirements, 1-1

T

target
  DBD specification, 10-5
  segment type, 4-54
Target DBD Specification screen, 10-5
technical support, xxiv
temporary selection criteria, 8-1
terminal keys
  program access, 1-16
  program function, 1-17
terminating File-AID for IMS/ISPF, 1-7
training files
  generating or modifying, 2-49
TSO
  command, 11-41
  ID, 4-75
  PREFIX, 4-75
tutorial (option T), 13-1
Tutorial screens, 13-1
TWIN command, 11-42

U

UNFORMAT command, 11-43
Unformatted Criteria screen, 8-23
unformatted edit mode
  about, 4-3
  commands
    CHILD, 11-9
    INSERT, 11-29
    primary, 4-45
  data presentation, 2-5
  inserting segment
    multiple record type, 11-29
    single record type, 11-29
  screen description, 4-43
Unformatted Mode screen
  character, 4-45
  hexadecimal, 4-43
unrecoverable errors, 1-7
unscrollable data display, 1-13
UP command, 4-39, 4-50, 11-43
UP Command Options screen, 4-50
UP MAX command, 4-50
UQ relational operator, 4-55
USE layouts, 3-6
user exits
  application relationship, 2-45
  modifying, 2-42
  security, 2-43
  segment control, 2-46
user profile dataset, 3-6
utilities (option 3)
  See initialize database utility (option 4)
Utility Selection Menu screen, 5-1

V

V (view) line command, 12-6
variable length segments, browsing/editing, 4-83
VIEW command, 11-43
virtual logical child segments, 4-79
volser, 6-17, 6-30, 6-32
VSAM
  extracting/loading KSDS file, 6-64
  organization, 3-3

W

World Wide Web, Compuware address, xxiv

X

X (exclude) line command, 4-14, 4-34, 12-7
XPSB command, 4-4, 6-2, 11-45
XREF
  See segment/layout (option 7)

Z

ZOOM command, 4-22, 4-41, 4-46, 4-57, 11-45
  Zoom Edit panel, 4-22, 4-41
    primary commands, 4-23, 4-41, 4-46
ZOOMH command, 4-23, 4-42, 4-46, 4-57, 8-26, 11-45
  Zoomh Edit panel, 4-23, 4-42
    primary commands, 4-24, 4-42, 4-46, 8-26