Abend-AID for CICS

User's Guide

Release 5.1

COMPUWARE®

Please direct questions about Abend-AID for CICS
or comments on this document to:

Abend-AID for CICS Technical Support
Compuware Corporation
One Campus Martius
Detroit, MI 48226-5099
1-800-538-7822

Outside the USA and Canada, please contact
your local Compuware office or agent.

This document and the product referenced in it are subject to the following legends:

Copyright 1994-2005 Compuware Corporation. All rights reserved. Unpublished rights reserved under the Copyright Laws of the United States.

U.S. GOVERNMENT RIGHTS-Use, duplication, or disclosure by the U.S. Government is subject to restrictions as set forth in Compuware Corporation license agreement and as provided in DFARS 227.7202-1(a) and 227.7202-3(a) (1995), DFARS 252.227-7013(c)(1)(ii) (OCT 1988), FAR 12.212(a) (1995), FAR 52.227-19, or FAR 52.227-14 (ALT III), as applicable. Compuware Corporation.

This product contains confidential information and trade secrets of Compuware Corporation. Use, disclosure, or reproduction is prohibited without the prior express written permission of Compuware Corporation. Access is limited to authorized users. Use of this product is subject to the terms and conditions of the user's License Agreement with Compuware Corporation.

Abend-AID, CICS Abend-AID/FX, Compuware, FrontLine, XPEDITER/CICS, and XPEDITER/TSO are trademarks or registered trademarks of Compuware Corporation.

BookManager, CICS, CICS/ESA, COBOL/370, DB2, IBM, IMS, Language Environment, MQSeries, MVS/ESA, OS/390, Softcopy Reader, VisualAge, VTAM, WebSphere, and z/OS are trademarks or registered trademarks of International Business Machines Corporation.

Adobe ® Acrobat ® Reader copyright © 1987-2005 Adobe Systems Incorporated. All rights reserved. Adobe and Acrobat are trademarks of Adobe Systems Incorporated.

All other company and product names are trademarks or registered trademarks of their respective owners.

Doc. CWCFUX5A
April 5, 2005.

Contents

Figures . . . . . **xiii**

Tables . . . . . **xvii**

Introduction . . . . . **xix**
Intended Audience xix
User's Guide Organization xix
Notation Rules xx
Related Publications xxi
FrontLine Support Website xxi
Online Documentation xxi
World Wide Web xxi
Technical Support xxi

Part 1. Abend-AID for CICS Basics

Chapter 1. Abend-AID for CICS Overview **1-1**
System Environment 1-1
Product Components 1-2
Transaction Dump Capture Component 1-2
Transaction Dump Interface 1-3
Transaction Dump Capture Address Space (TDCAS) 1-4
Region Dump Capture Component 1-4
Region Dump Interface 1-6
SVC 51 Interface 1-6
MVS Post-Dump Exit 1-6
Viewing Server Component 1-7
Product Functions 1-7
Dump-Independent Functions 1-8
Transaction Abend Analysis Functions 1-9
Region Dump Analysis Functions 1-10
General Features 1-12
Online Help 1-12
Screen Help 1-12
Field Help 1-13
Message Help 1-13
Command Help 1-13

Chapter 2. Getting Started **2-1**
Logging onto Abend-AID for CICS 2-1
Selecting a Viewing Server (ISPF Access Only) 2-2
Selecting an Entry 2-3
Exiting Abend-AID for CICS 2-4

Chapter 3. Abend-AID for CICS Interface **3-1**
Screen Layout 3-1
Screen Borders 3-2
Scroll Information Fields 3-2
Masking and Sorting 3-3
Row Field 3-3
Up/Down Scroll Field 3-4

Left/Right Scroll Field 3-4
COMMAND and OPTION Fields 3-4
Line Commands. 3-5
Screen Attribute Defaults 3-5
Screen Access 3-6
Menu Selections. 3-6
Cursor Point-and-Shoot Feature 3-6
Using a Mouse with the Point-and-Shoot Feature 3-7
ASSIST Function. 3-7
Navigation Commands 3-7
Fast-Path Commands 3-8
Jump Commands 3-8
Primary Commands 3-8
Command Availability 3-9

Chapter 4. Working with Dumps 4-1
Fault Summary 4-1
Abend-AID Directory. 4-2
Automatically Restoring Mask and Sort Values 4-2
Types of Directory Entries 4-4
Line Commands. 4-5
Transaction Entry Information Screen 4-7
Region Entry Information Screen 4-8
Entry Users Screen 4-9
Duplicate History Log 4-9
Duplicate Dump Expiration Interval 4-11
Duplicate Dump Suppression and Region Dumps 4-11
Contact Information Screen 4-12

Chapter 5. Accessing Storage Information 5-1
Displaying Storage. 5-1
CORE and HEXD Commands 5-1
Control Blocks and Storage 5-2
Memory Display. 5-3
Primary Commands 5-3
Scrollable Information 5-4
Displaying SUMDUMP Summary Data. 5-4
Locating Data in Storage 5-4
Issuing a FIND Command 5-4
Setting FIND Command Parameters 5-5
Navigating by Offset 5-5
Tracking Storage Navigation 5-6
Current Paperclip Table 5-6
Line Commands 5-6
Saved Paperclip List 5-7
Displaying the Saved Paperclip List 5-7
Adding the Current Paperclip Table to the Saved Paperclip List 5-7
Restoring a Saved Paperclip Table 5-7
Resaving the Current Paperclip Table 5-8
Line Commands. 5-8
Running Control Block Chains 5-8

Chapter 6. Displaying DSECTs 6-1
Displaying Control Blocks in DSECT Format 6-1
Displaying the DSECT Support Screen 6-1
Accessing Data on the DSECT Support Screens. 6-2
Suppressing DSECT Equate Statements 6-2

Supplied Abend-AID for CICS DSECTs 6-3
DSECTs for CICS Transaction Server 6-3

Chapter 7. Printing Abend-AID for CICS Information 7-1
Online Printing Overview 7-1
Print Options and Initiation Screen 7-1
Printing Screen Images 7-3
Example 1: 7-5
Example 2: 7-5
Example 3: 7-5
Example 4: 7-5
Example 5: 7-5
Example 6: 7-5
Printing Abend-AID for CICS-Supplied Reports 7-5
Complete Transaction Abend Report 7-5
Transaction Abend Summary Report 7-6
Complete DB2 Transaction Abend Report 7-6
DB2 Transaction Abend Summary Report 7-7
Region Dump Summary Report 7-8
Printing Directory Information 7-8

Part 2. Transaction Abend Processing

Chapter 8. Analyzing Transaction Abends 8-1
Diagnostic Summary. 8-2
Program Detail Screen 8-6
Task Detail Screen. 8-8
Terminal Detail Screen 8-9
Program Listing Screen 8-10
Accessing Storage for a Variable 8-11
3270 Bridge Information Screen 8-11
Expanded Data Field Screen 8-12
DFHRPL Concatenation Screen 8-13
User Execute Interface Block Screen. 8-14
Last 3270 Screen Image 8-15
Data Stream Analysis Screen. 8-16
PSW Information Screen 8-17
PSW Analysis Screen 8-18
Registers Screen. 8-19
DB2 Information Menu 8-20
Host Variables Screen 8-20
Bind Information Screen. 8-21
Precompile Information Screen 8-22
Columns Referenced Screen 8-22
RCT Detail Screen 8-23
Package Dependencies Screen 8-24
Hogan Information Menu 8-25
DL/I Information Screen 8-27
MSA Information Screen 8-28
DCI and Application DMCBS Screen 8-29
DCI Trace Screen 8-30

Chapter 9. Displaying Additional Transaction Abend Information 9-1
Program Information Menu 9-2
Program Link Information Screen. 9-2
Program Summary Information Screen 9-4
COBOL Storage Areas Menu 9-5

Working Storage 9-6
Linkage Section 9-7
External Cells 9-7
Task Global Table 9-7
Local Storage 9-8
Dynamic Storage Area 9-8
PL/I Storage Selection List 9-9
PL/I Storage Display 9-10
PL/I Storage Areas Menu 9-10
Automatic Storage Areas 9-11
Static Storage Areas 9-12
Controlled Storage Area 9-12
External Storage Areas 9-13
Storage Disassembly Screen 9-13
Data Locator Search Criteria Screen 9-15
Data Locator Results Screen 9-16
File Request Summary 9-17
File Detail Screens 9-18
Record Image Screen 9-19
File-Related Areas Screen 9-19
File Recovery Information Screen 9-20
Web Information Summary Menu 9-21
LE Options Control Block Screen 9-22

Chapter 10. Managing Source Files 10-1
Source Directory Screen 10-1
Using Distributed Viewing Support 10-3
Source Program Directory 10-5
Source Mismatch Selection Screen 10-7
Source Program Directory for Source Mismatch Selection 10-8

Chapter 11. Using Abend-AID for CICS with Language Environment 11-1
LE Support 11-1
LE Information in the Abend-AID for CICS Report 11-1
Abend-AID for CICS Processing of Abends 11-2

Chapter 12. Analyzing Data Exceptions 12-1
Analyzing a Sample S0C7 Data Exception 12-1

Part 3. Region Dump Processing

Chapter 13. Importing Region Dumps 13-1
Required Dump Dataset Attributes 13-1
Impact on the Abend-AID Directory 13-1
Impact on Dump Analysis 13-2
Abend-AID for CICS and SVC Dump SUMDUMP Data 13-2
Importing Dumps Automatically 13-2
Importing Dumps Manually 13-3
Dataset Import Screen 13-3
MVS MODIFY Command 13-4

Chapter 14. Analyzing Region Dumps 14-1
Diagnostic Summary 14-1
Task Detail Screen 14-5
Task/Wait Analysis Menu 14-6
Task Summary Screen 14-7
Task/Wait Analysis Screen 14-7

Trace Listing Screen 14-9
Kernel Domain Error Table Screen 14-11
Enqueue Summary Screen 14-13
Program Change Summary Screen 14-15
Storage Addressability Summary Screen 14-15
Storage Address Analysis Screen 14-16

Chapter 15. Analyzing Storage Violations 15-1
Storage Violation Overview 15-1
Storage Violation Debugging Example 15-2

Chapter 16. Analyzing MVS Virtual Storage 16-1
Private Storage Analysis 16-2
User Region Analysis 16-4
LSQA Analysis 16-14
Enhanced Memory Display 16-21
Common Storage Analysis 16-26
Common Storage Users 16-27
SQA Analysis 16-31
CSA Analysis 16-36
Link Pack Areas 16-40
Nucleus Areas 16-42
Allocated Storage Map 16-44

Part 4. Setting User Controls

Chapter 17. Setting User Controls 17-1
User Profile Screen 17-1
Print Options 17-3
Screen Attributes 17-3
PF Keys 17-5
Default PF Key Definitions 17-5
Modifying PF Key Functions 17-7

Part 5. Commands

Chapter 18. Primary Commands 18-1
Reading Command Syntax 18-2
ABENDTXT 18-3
ASSIST 18-3
BACKWARD 18-3
Example: 18-4
BLOG 18-4
BORDERS 18-4
BOTTOM 18-4
CANCEL 18-5
CCMENU 18-5
CHAIN 18-5
Example: 18-6
CLIP 18-6
CLR 18-7
CMDLIST 18-7
COMM 18-8
CORE 18-8
Example 1: 18-8
Example 2: 18-8

CRETRIEV 18-9
CURSOR. 18-9
DECODE 18-9
DEFAULTS 18-10
DISASM 18-10
DOWN. 18-11
Example:. 18-11
DSECT 18-11
END 18-11
EXIT. 18-12
FIND 18-12
Executing FIND from the Memory Display. 18-12
Example 1: 18-13
Example 2: 18-13
Executing FIND from Screens Other Than the Memory Display 18-13
Example:. 18-13
FORWARD. 18-14
Example:. 18-14
GO 18-14
HELP 18-14
Example:. 18-15
HEXD. 18-15
IBMMSG 18-15
INSTRUCT 18-15
LEFT. 18-16
Example:. 18-16
LINECMDS 18-16
LPRINT. 18-16
MAPD 18-18
Example 1: 18-19
Example 2: 18-19
Example 3: 18-19
Example 4: 18-19
Example 5: 18-19
Example 6: 18-19
MATCH 18-20
Example 1: 18-20
Example 2: 18-20
Example 3: 18-20
Example 4: 18-21
MODE 18-21
MSGHELP 18-21
Example:. 18-21
NEWS. 18-22
NOTE 18-22
@offset 18-22
-offset 18-22
+offset 18-23
PRINT. 18-23
RESET. 18-25
RESETDAE 18-25
RESTORE 18-26
Example:. 18-26
RETRIEVE. 18-26
RETURN. 18-26
REXX 18-26

Example: 18-27
RFIND 18-27
RIGHT 18-27
Example: 18-27
SAVE 18-27
Example: 18-28
SORT 18-28
SOURCE 18-28
SRCINST 18-29
TOP 18-29
UNSTCK 18-29
UP 18-29
Example: 18-30
WHERE 18-30
Example 1: 18-30
Example 2: 18-30
Example 3: 18-31
WHO 18-31
Example 1: 18-31
Example 2: 18-31
Example 3: 18-31

Part 6. REXX API

Chapter 19. Using the Abend-AID for CICS REXX API 19-1
Invoking the Abend-AID for CICS REXX API 19-1
Coding Abend-AID for CICS REXX API Programs 19-1
Toleration Mode 19-1
Sample Abend-AID for CICS REXX API Program SAMPREXX 19-2

Chapter 20. REXX API Functions and Commands 20-1
Abend-AID for CICS REXX API Special Variables. 20-1
Abend-AID for CICS REXX API Functions 20-1
FXADD. 20-1
Example: 20-2
FXDATE 20-2
Example: 20-2
FXDIV 20-3
Example 1: 20-3
Example 2: 20-3
FXDSDUP 20-3
Example: 20-3
FXDSLEN 20-4
Example: 20-4
FXDSMSK. 20-5
Example 1: 20-5
Example 2: 20-5
FXDSOFF 20-5
Example: 20-5
FXDSSCL 20-6
Example: 20-6
FXDSTYP 20-7
Example 1: 20-8
Example 2: 20-8
FXGET 20-8
Example: 20-8

FXGETC 20-9
Example: 20-9
FXINFO 20-10
For Transaction Dumps Only: 20-10
FXJDATE 20-11
Example: 20-11
FXMODE 20-12
Example: 20-12
FXMULT 20-12
Example: 20-12
FXREM 20-13
Example: 20-13
FXSTIME 20-13
Example: 20-13
FXSUB 20-14
Example: 20-14
FXSYMBOL 20-15
Example: 20-15
FXTABENT 20-15
Example 1: 20-16
Example 2: 20-16
Example 3: 20-16
Example 4: 20-16
FXTM 20-17
Example: 20-17
FXTRACE 20-17
Example: 20-17
Abend-AID for CICS REXX API Commands 20-18
FXHEXD 20-18
Example: 20-18
FXPCLEAR 20-18
Example: 20-18
FXPCLIP 20-18
Example: 20-18
FXPSHOW 20-19
Example: 20-19

Part 7. Appendixes

Appendix A. Supplied Transaction A-1
Controlling the Dump Interface Manually A-1
Transaction Dump Interface A-2
Region Dump Interface A-2
Modifying Temporary Transaction Dump Profiles A-3

Appendix B. Symbols List B-1
MVS Symbols List B-1
CICS Transaction Server Symbols List B-1

Appendix C. Internal Transaction Abends C-1
AAB1, AAB2, and AAB3 . . . . . C-1
AAB4 . . . . . C-1
ERAA C-1
ER24 and ER25 . . . . . C-1
FXAE C-2
FXAS C-2

FXAV C-2
FXBV C-2
FXVW C-2
U3264 . . . . . C-2

Glossary G-1

Index I-1

Figures

1-1. Abend-AID for CICS Transaction Dump Capture Component 1-3
1-2. Abend-AID for CICS Region Dump Capture Component 1-5
1-3. Abend-AID for CICS Viewing Server Component....1-7
1-4. Primary Options Menu for Transaction Abend Analysis 1-8
1-5. Primary Options Menu for Region Dump Analysis 1-8
2-1. Server Selection Screen 2-2
3-1. Basic Screen Format (Borders On) 3-1
3-2. Data Screen with Fixed and Scrollable Areas....3-2
3-3. Location of Scrolling Information Fields 3-3
3-4. Location of Command Fields 3-4
3-5. Data Screen Default Colors....3-5
3-6. Primary Options Menu for Transaction Abend Analysis 3-6
4-1. Fault Summary....4-2
4-2. Scrollable Screens (Left to Right) Comprising the Abend-AID Directory 4-3
4-3. Transaction Entry Information Screen....4-7
4-4. Region Entry Information Screen....4-8
4-5. Entry Users Screen 4-9
4-6. Duplicate History Log....4-10
4-7. Duplicate History Log for an Expired Dump 4-11
4-8. Contact Information Screen....4-12
5-1. Control Blocks/Storage for Region Dumps....5-2
5-2. Memory Display for Transaction Entries 5-3
5-3. Find for Storage Display 5-5
5-4. Current Paperclip Table....5-6
5-5. Saved Paperclip List 5-7
5-6. CHAIN Command Parameters Screen....5-8
6-1. DSECT Support Screen....6-1
7-1. Print Options and Initiation....7-2
8-1. Diagnostic Summary, Page 1 8-2
8-2. Diagnostic Summary, Page 2 8-3
8-3. Diagnostic Summary, Page 3 8-3
8-4. Diagnostic Summary, Page 4 8-4
8-5. Diagnostic Summary, Page 5 8-4
8-6. Program Detail Screen 8-7
8-7. Task Detail Screen....8-8
8-8. Terminal Detail Screen 8-10
8-9. Program Listing Screen....8-11
8-10. 3270 Bridge Information Screen....8-12
8-11. Expanded Data Field Screen 8-12
8-12. DFHRPL Concatenation Screen....8-13
8-13. User Execute Interface Block Screen....8-14
8-14. Last 3270 Screen Image 8-15
8-15. Data Stream Analysis Screen....8-16
8-16. PSW Information Screen 8-17
8-17. PSW Analysis Screen....8-18
8-18. Registers Screen....8-19
8-19. DB2 Information Menu....8-20
8-20. Host Variables Screen 8-21
8-21. Bind Information Variables Screen 8-21
8-22. Precompile Information Screen....8-22
8-23. Columns Referenced Screen 8-23
8-24. RCT Detail Screen 8-23
8-25. Package Dependencies Screen 8-24
8-26. Hogan Information Menu....8-25
8-27. Hogan ITCB Screen....8-25
8-28. Hogan UTCB Screen 8-26

8-29. Hogan UPCB Screen 8-26
8-30. DL/I Information Screen 8-27
8-31. MSA Information Screen 8-28
8-32. DCI and Application DMCBS Screen 8-29
8-33. DCI Trace Screen 8-30
9-1. Program Information Menu 9-2
9-2. Program Link Information Screen 9-3
9-3. Program Summary Information Screen 9-4
9-4. COBOL Storage Areas Menu 9-6
9-5. Program Listing Screen for Working Storage 9-6
9-6. Program Listing Screen for Linkage Section 9-7
9-7. Program Listing Screen for Local Storage 9-8
9-8. PL/I Storage Selection List 9-9
9-9. PL/I Storage Display 9-10
9-10. PL/I Storage Areas Menu 9-11
9-11. PL/I Automatic Storage List 9-11
9-12. PL/I Controlled Storage List 9-12
9-13. PL/I External Storage List 9-13
9-14. Storage Disassembly Screen 9-14
9-15. Alternate Storage Disassembly Screen 9-14
9-16. Data Locator Search Criteria Screen 9-15
9-17. Data Locator Results Screen 9-16
9-18. File Request Summary 9-17
9-19. Local File Detail Screen 9-18
9-20. Remote File Detail Screen 9-18
9-21. Record Image Screen 9-19
9-22. File-Related Areas Screen 9-20
9-23. File Recovery Information Screen 9-21
9-24. Web Information Summary Menu 9-22
9-25. LE Options Control Block Screen 9-22
10-1. Source Directory Screen with List of User-Defined and CICS Source Datasets 10-2
10-2. Source Dataset Information Screen 10-3
10-3. Add Source Dataset Window 10-4
10-4. Remote Dataset Access Window 10-4
10-5. Source Program Directory 10-5
10-6. Source Program Browse Screen 10-6
10-7. Source Program Information Screen 10-6
10-8. Source Mismatch Selection Screen 10-7
10-9. Source Program Directory for Source Mismatch Selection 10-8
12-1. Diagnostic Summary, Page 1 12-2
12-2. Diagnostic Summary, Page 2 12-2
12-3. Diagnostic Summary, Page 3 12-3
12-4. Diagnostic Summary, Page 4 12-3
12-5. Diagnostic Summary, Page 5 12-4
12-6. Expanded Data Field Screen 12-4
12-7. PSW Information Screen 12-5
12-8. Program Detail Screen 12-6
12-9. Source Program Directory 12-6
12-10. Source Program Browse Screen 12-7
12-11. Source Program Browse Screen — COMPUTE Statement in Error 12-7
12-12. Last 3270 Screen Image 12-8
12-13. Program Listing Screen — Working Storage — Field in Error 12-9
12-14. Program Listing Screen — Working Storage — Group Name for Field in Error 12-9
12-15. Program Listing — Abending Statement 12-10
12-16. Program Listing — Last EXEC CICS Command 12-11
12-17. Program Listing Screen — Working Storage — Group Name 12-11
12-18. Program Listing Screen — Working Storage — Invalid Data 12-12
13-1. Dataset Import Screen 13-3
14-1. Diagnostic Summary for a Region Dump (Narrative Format), Page 1 14-2
14-2. Diagnostic Summary for a Region Dump (Narrative Format), Page 2 14-2
14-3. Diagnostic Summary for a Region Dump (Narrative Format), Page 3 14-3

14-4. Diagnostic Summary for a Region Dump (Abbreviated Format), Page 1 14-3
14-5. Diagnostic Summary for a Region Dump (Abbreviated Format), Page 2 14-4
14-6. Task Detail Screen 14-5
14-7. Task/Wait Analysis Menu 14-6
14-8. Task Summary Screen 14-7
14-9. Task/Wait Analysis Screen 14-8
14-10. Task/Wait Analysis Screen, Scrolled Right 14-8
14-11. Task/Wait Analysis Screen, Scrolled Far Right 14-9
14-12. Abbreviated Trace Listing, Filtered by Exception Entries 14-10
14-13. Short Trace Listing 14-10
14-14. Full Trace Listing 14-11
14-15. Kernel Domain Error Table Screen 14-12
14-16. Kernel Domain Error Detail Screen 14-12
14-17. Kernel Linkage Stack Screen 14-13
14-18. Enqueue Summary Screen (Scrolled Left) 14-14
14-19. Program Change Summary 14-15
14-20. Storage Addressability Summary 14-16
14-21. Storage Address Analysis 14-16
15-1. Primary Options Menu 15-3
15-2. Diagnostic Summary 15-3
15-3. Memory Display 15-4
15-4. Positioning the screen at the beginning address of the storage 15-5
15-5. Storage Addressability Summary 15-5
15-6. Addressability Detail (TCA) 15-6
15-7. TCA Interpreted Screen 15-6
15-8. Abbreviated Trace Listing 15-7
15-9. Abbreviated Trace Listing (bottom) 15-8
15-10. Finding a Previous Occurrence on the Abbreviated Trace Listing Screen 15-8
15-11. Abbreviated Trace Listing 15-9
15-12. Selecting FULL on Abbreviated Trace Listing 15-9
15-13. Full Trace Listing Screen 15-10
15-14. Short Trace Listing Screen 15-10
16-1. JESMSGLOG for the S878 Abend 16-2
16-2. MVS Storage Analysis Menu 16-3
16-3. Virtual Storage Map Screen 16-3
16-4. Private Area Summary Screen 16-4
16-5. Free Block Queue Elements Screen, Extended Private Area 16-5
16-6. Free Block Queue Elements Screen, Private Area 16-6
16-7. Allocated Private Subpools Screen 16-7
16-8. Allocated Private Subpools Screen for User Regions 16-7
16-9. Summarized Private Subpools 16-8
16-10. Summarized Private Subpools Screen, Sorted and Scrolled Down 16-9
16-11. Allocated Private Subpools Screen, Sorted and Scrolled Down 16-9
16-12. Private Subpool Detail Screen 16-10
16-13. Private Subpool Detail Screen, Scrolled Right 16-11
16-14. TCB Summary Screen 16-11
16-15. Storage Disassembly Screen 16-12
16-16. Memory Display Screen 16-12
16-17. TCB Summary Screen 16-13
16-18. Allocated Private Subpools Screen 16-13
16-19. Virtual Storage Map Screen 16-14
16-20. Virtual Storage Map Screen 16-15
16-21. Private Area Summary Screen 16-15
16-22. LSQA Summary Screen 16-16
16-23. Summarized LSQA Subpools Screen 16-16
16-24. LSQA Subpool Detail Screen 16-17
16-25. LSQA Subpool Detail Screen, Masked 16-17
16-26. Memory Display Screen 16-18
16-27. Nucleus Map Screen 16-18
16-28. Memory Display Screen 16-19
16-29. LSQA Subpool Detail Screen 16-19

16-30. LSQA Subpool Detail Screen, Masked....16-20
16-31. Memory Display Screen....16-20
16-32. Dynamic Storage Area Summary Screen....16-21
16-33. Dynamic Storage Area Detail Screen....16-21
16-34. Memory Display Screen, Page 1....16-22
16-35. Memory Display Screen, Page 2....16-22
16-36. Memory Display Screen, Page 3....16-23
16-37. Private Area Summary Screen....16-23
16-38. Memory Display Screen, Page 1....16-24
16-39. Memory Display Screen, Page 2....16-24
16-40. Memory Display Screen, Page 3....16-25
16-41. Memory Display Screen, Page 4....16-25
16-42. Virtual Storage Map Screen....16-26
16-43. SQA Summary Screen....16-27
16-44. Common Storage Users Screen....16-28
16-45. Common Storage Users, Sorted by Total SQA....16-29
16-46. Common Storage Allocations Screen....16-29
16-47. Common Storage Allocations Screen....16-30
16-48. Common Storage Users Screen, Sorted by Total ESQA....16-31
16-49. Common Storage Users Screen, Sorted by Total SQA....16-31
16-50. Summarized SQA Subpools Screen....16-32
16-51. SQA Subpool Detail Screen....16-32
16-52. DFEs for Specific Page(s) Screen....16-33
16-53. SQA Subpool Detail Screen, Masked....16-33
16-54. Memory Display Screen for Data Address....16-34
16-55. SQA Summary Screen....16-34
16-56. DFEs in Size Queue Order Screen....16-35
16-57. Common Service Area Summary Screen....16-36
16-58. CSA Free Block Queue Elements Screen....16-37
16-59. Summarized CSA Subpools Screen....16-37
16-60. CSA Subpool Allocations Screen....16-38
16-61. CSA Subpool Detail Screen....16-38
16-62. CSA Subpool Detail Screen, Masked....16-39
16-63. Link Pack Areas Map Screen....16-40
16-64. Link Pack Areas Map Screen, Masked....16-41
16-65. Link Pack Areas Map Screen, Masked....16-41
16-66. Nucleus Map Screen....16-42
16-67. Nucleus Map Screen, Masked....16-42
16-68. Nucleus Map Screen, Masked....16-43
16-69. Allocated Storage Map Screen....16-43
16-70. Allocated Storage Map Screen....16-44
16-71. Allocated Storage Map Screen for Extended SQA....16-44
16-72. Allocated Storage Map Screen for Extended SQA....16-45
16-73. Allocated Storage Map Screen, Masked....16-46
17-1. User Controls Menu....17-1
17-2. User Profile Screen....17-2
17-3. Print Options and Initiation....17-3
17-4. Screen Attributes Screen....17-4
17-5. Attribute Test Screen....17-5
17-6. PF Key Definitions and Labels Screen....17-7
18-1. CICS Abend-AID Transitional Menu....18-5
18-2. Command List Example....18-7
19-1. Sample Abend-AID for CICS REXX API Program, Part 1....19-2
19-2. Sample Abend-AID for CICS REXX API Program, Part 2....19-3
19-3. Sample Abend-AID for CICS REXX API Program, Part 3....19-4
19-4. Sample Abend-AID for CICS REXX API Program, Part 4....19-4
19-5. SAMPREXX Sample Program Results....19-5
A-1. AAON Transaction Options Menu....A-1
A-2. Temporary Tran Dump Profile Screen....A-4

Tables

6-1. Supplied CICS Transaction Server DSECTs 6-3
13-1. Required Dump Dataset Attributes 13-1
17-1. Default PF Key Definitions 17-5
18-1. Primary Commands 18-1

Introduction

This guide describes how to use Compuware's Abend-AID for CICS (formerly known as CICS Abend-AID/FX) product to analyze CICS *transaction* and *region* dumps.

Note: Only Abend-AID for CICS screens for CICS Transaction Server for z/OS Version 3 Release 1 are shown in this guide unless otherwise noted. On screens that display the CICS release, CICS Transaction Server for z/OS Version 3 Release 1 is displayed as *6.4.0*.

Intended Audience

This guide is intended for the following audience:

- System programmers
- Application programmers
- Application managers
- Technical support managers.

A working knowledge of CICS is necessary to derive the most benefit from this document.

User's Guide Organization

This guide is organized into seven main parts:

Part 1, Abend-AID for CICS Basics

Part 1 describes Abend-AID for CICS facilities, functions, and procedures common to both transaction abend processing and region dump processing. Topics presented in Part 1 include:

- Abend-AID for CICS architecture
- Displaying online help
- Accessing and exiting the product
- Starting, stopping, and selecting servers
- Selecting dumps
- Displaying information about dumps
- Navigating in storage
- Displaying control block information
- Displaying DSECTs
- Printing information.

Part 2, Transaction Abend Processing

Part 2 describes procedures specific to transaction abend processing. Topics presented in Part 2 include:

- Analyzing transaction abends
- Managing source files
- Using Abend-AID for CICS with Language Environment
- Analyzing data exceptions.

Part 3, Region Dump Processing

Part 3 describes procedures specific to region dump processing. Topics presented in Part 3 include:

- Importing region dumps
- Analyzing region dumps
- Analyzing storage violations
- Analyzing MVS virtual storage.

Part 4, Setting User Controls

Part 4 describes the steps for changing the user interface defaults that are initially set during installation. These defaults include the following:

- User profiles
- Print options
- Screen attributes
- PF key settings.

Part 5, Commands

Part 5 is a user reference that describes the product's primary commands. Page through Part 5 to become familiar with its content, but reading Part 5 from beginning to end is not necessary.

Part 6, REXX API

Part 6 describes the Abend-AID for CICS REXX application program interface (API) and the commands and functions supported with it.

Part 7, Appendixes

The appendixes included in this guide describe the CICS transaction supplied with Abend-AID for CICS, the symbols Abend-AID for CICS uses for CICS dumps, and the Abend-AID for CICS internal transaction abends. Like Part 5, the appendixes are intended as user reference. Page through them to become familiar with their contents, but reading them in their entirety is not necessary.

For more details about the contents of this guide, refer either to the start of Parts 1 through 7, or to the table of contents.

Notation Rules

This guide uses the following notation rules:

- **Bold** highlighting is used for headings and for commands you are instructed to type in the COMMAND or OPTION fields. It is also used for referring to screen field names and field data and is used in examples of command syntax.
- *Italic* highlighting is used for emphasizing important terms or phrases, for command variables, and for document titles.
- Command syntax diagrams have specific rules governing their appearance. For information on reading them, refer to "Reading Command Syntax" on page 18-2.
- *Notes* provide additional information about the current topic.
- *Cautions* warn of system failures or other problems that can occur if you fail to follow documented procedures.

Related Publications

The following documents provide more information about Abend-AID for CICS:

- *Abend-AID for CICS Benefits Summary* — Describes the benefits and capabilities of Abend-AID for CICS based on a problem-solving approach.
- *Abend-AID for CICS Installation and Customization Guide* — Describes the procedures for installing, customizing, and maintaining Abend-AID for CICS.
- *Abend-AID for CICS Messages and Codes Manual* — Lists all Abend-AID for CICS messages, ranks their severity, explains their meaning, and describes any resultant actions performed by the system or required of the user.
- *Abend-AID for CICS Quick Reference* — Describes the steps for accessing and exiting the product and for displaying online help. It also describes basic screen navigation, PF key defaults, Abend-AID for CICS commands, transaction abend source support, and trace table entries.

FrontLine Support Website

Access online technical support for Compuware products via our FrontLine support website. View or download documentation, frequently asked questions, and product fixes, or directly e-mail Compuware with questions or comments. To access FrontLine, you must first register and obtain a password at **http://frontline.compuware.com**.

Online Documentation

Documentation for this product is provided on CD-ROM in several electronic formats:

- View PDF files with the free Adobe Acrobat Reader, available at **http://www.adobe.com**.
- View HTML files with any standard Web browser.
- View BookManager softcopy files with any version of IBM BookManager READ or the IBM Softcopy Reader. To learn more about BookManager or to download the free Softcopy Reader, go to **http://www.ibm.com**.

World Wide Web

Compuware's site on the World Wide Web provides information about Compuware and its products. The address is **http://www.compuware.com**.

Technical Support

At Compuware we strive to make our products and documentation the best in the industry. Feedback from our customers helps us to maintain our quality standards.

If problems arise while installing this product, consult the Abend-AID for CICS documentation or the Abend-AID for CICS technical representative at your site. If problems persist, please obtain the following information before calling Compuware's 24-hour product support hotline. This information may be required to help determine the cause of the problem:

- The Abend-AID for CICS release you are using. To find the release, enter the **SERVINFO** fast-path command on any Abend-AID for CICS screen. Position the cursor on the RELEASE field of the displayed screen and press Enter.
- The CICS release you are using.

- The DB2 release you are using.
- The exact error message, if any, that was displayed.
- All Abend-AID for CICS output for the task you were trying to perform.
- The MVS dump containing the Abend-AID for CICS failure.
- A tape copy of the SVC, SLIP, or SYSMDUMP dump you were trying to import or view.
- The CICS region JES job log.
- The MVS SYSLOG for the involved time period.
- Screen prints of the Dump Analysis Message Log that show the results of importing the region dump.

Note: To display the Dump Analysis Message Log, either select a region dump from the Directory with the G (Messages) line command, or type **MLOG** in the COMMAND (or OPTION) field on any Abend-AID for CICS screen and press Enter. For MLOG to function, however, you must first select a region dump from the Abend-AID Directory.

- The contents of the viewing server, TDCAS, and CICS region JES output files.
- Any relevant SMP/E output.
- Any other relevant screen prints.

Refer to Appendix C, "Internal Transaction Abends" for a description of the internal transaction abend entries that may be displayed on the Abend-AID Directory or the user abends you may encounter.

If Compuware requests documentation, please send it to the following address:

Abend-AID for CICS Technical Support
Compuware Corporation
One Campus Martius
Detroit, MI 48226-5099
1-800-538-7822

Part 1.
Abend-AID for CICS Basics

Part 1 of this guide describes Abend-AID for CICS facilities, functions, and procedures common to transaction abend processing and region dump processing. Before attempting to use Abend-AID for CICS, you should read this part of the guide in its entirety.

The following chapters are in Part 1:

Chapter 1, "Abend-AID for CICS Overview"

Chapter 1 defines the system environment needed to support Abend-AID for CICS, it summarizes the product's architecture and general functions, and it describes how to access the online help facility.

Chapter 2, "Getting Started"

Chapter 2 describes the steps for accessing the product; starting, stopping, or selecting a server; selecting a dump; and exiting the product.

Note: Many Abend-AID for CICS functions become available only after you have selected an entry from the Abend-AID Directory. For the list of these functions, refer to Chapter 2.

Chapter 3, "Abend-AID for CICS Interface"

Chapter 3 describes the format of Abend-AID for CICS screens and the methods for navigating from screen to screen within the product.

Chapter 4, "Working with Dumps"

Chapter 4 describes in detail how to select and analyze Abend-AID for CICS entries and display basic information about them. The screens described in this chapter include the following:

- Fault Summary
- Abend-AID Directory
- Entry Information
- Duplicate History.

Chapter 5, "Accessing Storage Information"

Chapter 5 describes how to display control block information related to a transaction or region dump. It also describes how to locate and track address information in the Memory Display screen, which displays dump storage in hexadecimal format.

Chapter 6, "Displaying DSECTs"

Chapter 6 describes how to display CICS control blocks in DSECT format. DSECTs that Abend-AID for CICS supports are also listed.

Chapter 7, "Printing Abend-AID for CICS Information"

Chapter 7 describes how to print Abend-AID for CICS information for transaction abends and region dumps.

Chapter 1.
Abend-AID for CICS Overview

This chapter defines the system environment needed to support Abend-AID for CICS (formerly known as CICS Abend-AID/FX), and it describes the product's architecture. Additionally, it lists the functions and features available for dump analysis, and it details how to access online help for the product's screens, fields, messages, and commands.

System Environment

Note: Refer to **http://frontline.compuware.com** for updates.

Abend-AID for CICS supports the following:

CICS

- CICS Transaction Server for z/OS 3.1, 2.3, and 2.2
- CICS Transaction Server for OS/390 1.3

Operating Systems

- z/OS 1.6 through 1.1
- OS/390 2 .10

Note: Abend-AID for CICS can process dumps captured on any z/OS or OS/390 version listed above.

Programming Language Support

- Language Environment associated with z/OS 1.5 through 1.1 and OS/390 2.10
- COBOL
  - Enterprise COBOL for z/OS and OS/390 3.3, 3.2, 3.1
  - COBOL for OS/390 & VM 2.2 and 2.1
  - COBOL for MVS & VM 1.2
  - COBOL/370
  - VS COBOL II 1.4 and less current.
- PL/I
  - Enterprise PL/I for z/OS and OS/390 3.4, 3.3, 3.2, 3.1
  - VisualAge PL/I for OS/390 2.2
  - PL/I for MVS & VM 1.1.1
  - AD/Cycle PL/I 1.1
  - PL/I 2.3.
- Assembler.

Databases

- DB2 8.1, 7.1, 6.1
- DB2 SQL
- IMS 8.1, 7.1, 6.1.

Other Software

- CICS Web Interface support for CICS Transaction Server for OS/390 1.3 or more current.
- Interactive Problem Control System (IPCS) Command Facility

  Note: The IPCS Command Facility is available only for dumps matching the operating system running the viewing server at your site.

- Hogan System Software
- Geac Enterprise Server (formerly Dun & Bradstreet Software) E Series Applications (MSA DCI).

For specifics about including either IPCS support or DB2 support for transaction dump processing, refer to the *Abend-AID for CICS Installation and Customization Guide*.

Product Components

The Abend-AID for CICS architecture consists of three major components:

- Transaction dump capture component
- Region dump capture component
- Viewing server component.

Abend-AID for CICS also requires Compuware Shared Services (CSS), Compuware License Management System (LMS), Compuware Base Services, and Compuware Compuware Base Services/HCI (HCI). Refer to the *Enterprise Common Components Installation and Customization Guide* and the *Compuware Shared Services User/Reference Guide* for a description of these ECC facilities.

Transaction Dump Capture Component

Figure 1-1 illustrates the transaction dump capture component. For transaction dumps, the dump capture component consists of the *transaction dump interface* and the *transaction dump capture address space (TDCAS)*.

Figure 1-1. Abend-AID for CICS Transaction Dump Capture Component

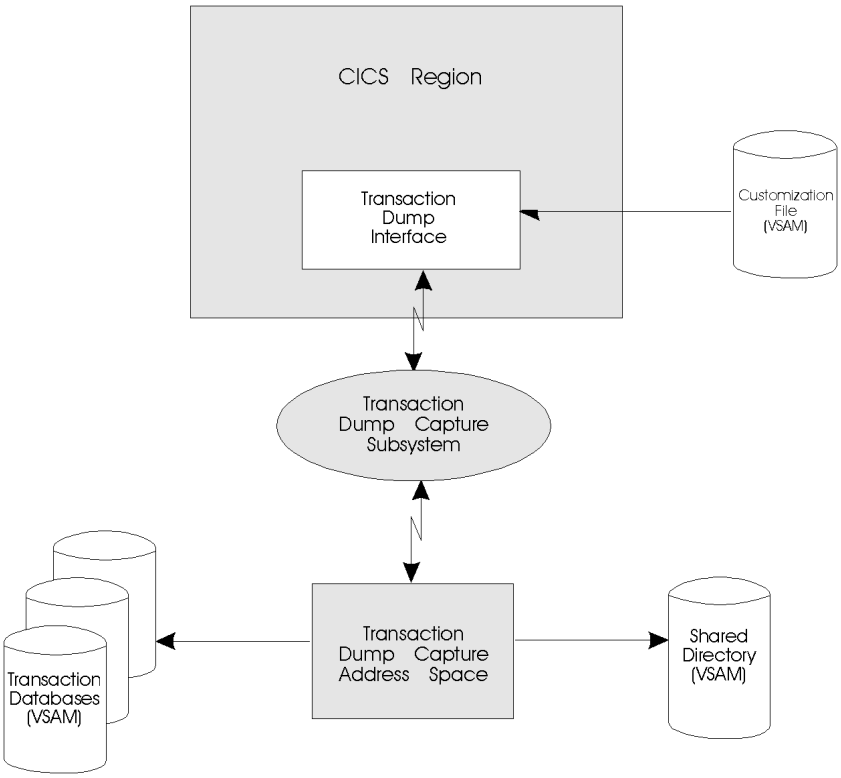

Transaction Dump Interface

The transaction dump interface is the portion of the transaction dump capture component that runs in the CICS address space. It is started and stopped using the AAON transaction, or with entries in the CICS PLT. Very little Abend-AID for CICS code actually runs in the CICS address space. Most of the dump capture and processing is done in the transaction dump capture address space (TDCAS).

The transaction dump interface is a CICS dump domain exit. The transaction dump interface determines whether Abend-AID for CICS is to process a transaction abend. If the interface determines that the abend requires processing, it passes control to the TDCAS using the transaction dump capture subsystem to facilitate communication.

Note: Abend-AID for CICS will not process a transaction abend if *any* of the following situations exist:

- Abend-AID for CICS is currently processing an abend for the same task.
- The site has specified that duplicate dumps are suppressed, the abend is a duplicate of a previous abend, and the duplicate dump expiration interval has not expired.
- The abend matches an exception condition for which the site has specified dumps are not taken.
- The CICS region is currently at a short-on-storage condition.
- The CICS region does not currently have enough storage for Abend-AID for CICS to process the abend.
- CICS is in the process of shutting down
- The transaction dump capture address space (TDCAS) is not active.

Transaction Dump Capture Address Space (TDCAS)

The transaction dump capture address space (TDCAS) is responsible for transaction dump capture and processing. One TDCAS is required on every MVS image where you use Abend-AID for CICS. You can have more than one TDCAS per image, but this is normally not necessary. The TDCAS must be active to capture Abend-AID for CICS transaction dumps, so Compuware recommends you start it as a started task automatically after each IPL. If the TDCAS is not available, Abend-AID for CICS invokes an IBM transaction dump instead of an Abend-AID for CICS transaction dump.

The first TDCAS started on an MVS image starts a subsystem that is used for communication between the CICS region and the TDCAS. All TDCASs on the image use this single subsystem for communication. This subsystem must be unique; it cannot be the same subsystem you use for Abend-AID for CICS TSO/ISPF and/or CICS viewing access.

When a dump occurs, the TDCAS allocates a data space into which it writes dump data. You control how much of the captured data is written to the data space, using the DATASPACE TDCAS configuration parameter. Compuware recommends that you write only part of the data — the volatile storage areas — to the data space. The remainder of the captured storage is written directly to the transaction database. This option offers excellent performance while minimizing the amount of auxiliary storage used by the transaction dump capture process.

You can also choose to write all of the dump data to a data space. While this approach has significant performance benefits, it could possibly cause an MVS system problem, such as an auxiliary storage shortage, if multiple transaction dumps are being taken in rapid succession. For this reason, ensure that you have sufficient auxiliary storage available before selecting this option. Refer to the *Abend-AID for CICS Installation and Customization Guide* for more information.

Finally, you can choose to bypass the data space creation, and write transaction dump data directly to a transaction database. This method is significantly slower than using a data space, and may impact your CICS region if multiple transaction dumps are being taken in rapid succession. Compuware does *not* recommend that you write dumps directly to transaction databases.

The CICS region references information from the Abend-AID for CICS customization file to determine which shared directory is associated with the CICS region. Customization information also indicates what transaction databases are candidates to contain dumps for this CICS region. Using this information, the TDCAS determines to which transaction database it should write dump information.

Note: The TDCAS also writes some parameter information to the customization file directly, but it doesn't reference this file during normal processing.

Once the data is written to the data space, TDCAS routines analyze the data. Analysis information and dump storage are written to the appropriate transaction database, and the data space is deleted.

Region Dump Capture Component

Note: Abend-AID for CICS does not require any modifications to CICS to capture region dumps. The information in this section describes optional facilities that you can install to capture additional region information or to automatically import region dumps into Abend-AID for CICS.

The optional dump capture component for region dumps consists of a *region dump interface*, an *SVC 51 interface*, and an *MVS post-dump exit*. Abend-AID for CICS uses these facilities to import dumps automatically, to copy dumps, to gather program change summary information, and to notify users when CICS region dumps occur.

Figure 1-2 illustrates the region dump capture component, which is an optional part of the Abend-AID for CICS architecture. Further, the region dump interface, SVC 51 interface, and MVS post-dump exit are independent of one another, so you only have to install the ones you want.

Note: If you do not install the SVC 51 interface or MVS post-dump exit, you can still manually import SDUMPs into Abend-AID for CICS via the product's online dump dataset import facility. For specifics, refer to Chapter 13, "Importing Region Dumps". For information on the options available for processing region dumps, refer to the *Abend-AID for CICS Installation and Customization Guide*.

Figure 1-2. Abend-AID for CICS Region Dump Capture Component

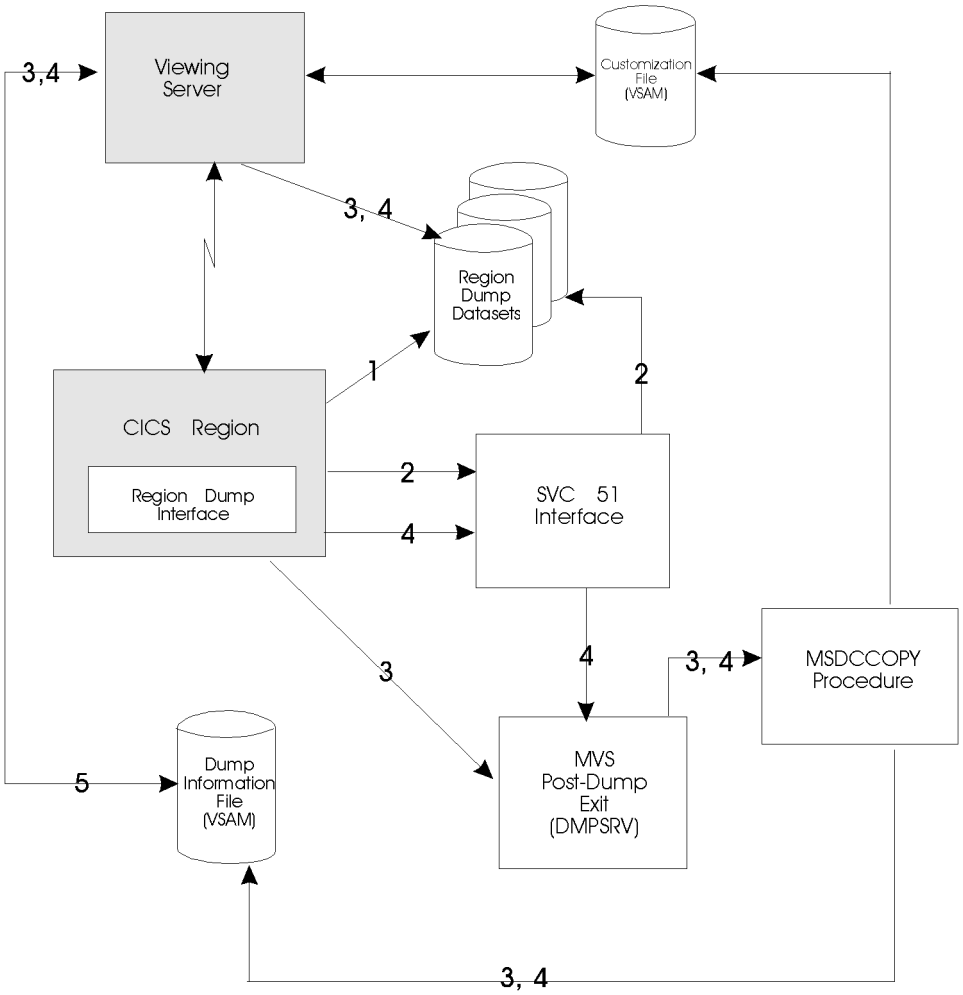

Figure 1-2 illustrates the region dump capture flow. The flow is different depending on whether you're using the Abend-AID for CICS SVC 51 interface, the Abend-AID for CICS MVS post-dump exit, or neither of these optional facilities. The SVC 51 interface and the MVS post-dump exit are described later in this section. The numbers in this figure have the following explanations:

1. SYS1.DUMPxx or SDUMP to an MVS automatically allocated dataset, without auto import. This method is normal dump capture, without either the SVC 51 interface or the MVS post-dump exit.
2. SDUMP (including optimized SDUMPS) to an Abend-AID for CICS user-defined dataset. This method uses the SVC 51 interface.

3. SYS1.DUMPxx or SDUMP to an MVS automatically allocated dataset, with auto copy/auto import. This method uses the MVS post-dump exit.
4. Same as 3 when job name is used as criteria for dump processing on the CICS Region Configuration screen. This method uses the MVS post-dump exit and the SVC 51 interface.
5. File updated by the viewing server whenever a region dump is imported, regardless of how it is being imported, and occurs for all methods, including manual dump import.

Region Dump Interface

The Abend-AID for CICS region dump interface does not participate in dump capture. Its purpose is to capture the data necessary to build the Program Change Summary display. If the region dump interface is not active, this data is not captured, but dump capture and processing continues.

The region dump interface is a CICS dump domain exit. This optional interface allows Abend-AID for CICS to gather the information necessary to produce a Program Change Summary, which highlights programs that have been recently linked or zapped.

Notes:

1. The region dump interface is *not* required to capture region dumps. It is required *only* to capture information about recently changed programs in the DFHRPL concatenation. If this list is captured, you can view it through the Abend-AID for CICS region dump display screens. Entering the **CHANGES** fast-path command displays the Program Change Summary.
2. Capturing the program change summary information adds a small amount of overhead to the dump capture process. Usually this amount is insignificant, but if you see any performance degradation at dump capture time, you can turn off the region dump interface while still leaving the transaction dump interface active.

SVC 51 Interface

This optional interface allows you to perform the following functions:

- Take an SDUMP to a user-defined dataset, rather than to a SYS1.DUMPxx dataset and, optionally, schedule it for automatic import.
- Automatically copy and/or import a region dump, if you are using job name as a criteria for determining how region dumps are processed.

MVS Post-Dump Exit

This optional exit performs the following tasks:

- Determine if your site wants to copy a SYS1.DUMPxx dataset to another dataset after a CICS region dump is initially taken to the SYS1.DUMPxx dataset.
- Schedule automatic import of region dumps copied from SYS1.DUMPxx datasets by Abend-AID for CICS or for region dumps taken to automatically allocated dump datasets.
- Notify a user when a region dump is taken.

Remember, if your site does not configure the Abend-AID for CICS installation to import region dumps automatically, you can still import them manually via the dump dataset import facility. For more information about this facility, refer to "Importing Dumps Manually" on page 13-3.

Viewing Server Component

The viewing server is an MVS address space that allows users to view captured dump information. It also performs import and analysis of CICS region dumps for use by the product. The viewing server must be active for Abend-AID for CICS to display transaction abend information or to import or display region dumps. **The viewing server does not have to be active for Abend-AID for CICS to capture transaction or region dumps.**

Figure 1-3 illustrates the Abend-AID for CICS viewing server component. You must have at least one viewing server, but you can configure more than one. The number of viewing servers you have depends on your site's configuration requirements. The *Abend-AID for CICS Installation and Customization Guide* describes examples of situations requiring one versus multiple Abend-AID for CICS viewing servers.

Figure 1-3. Abend-AID for CICS Viewing Server Component

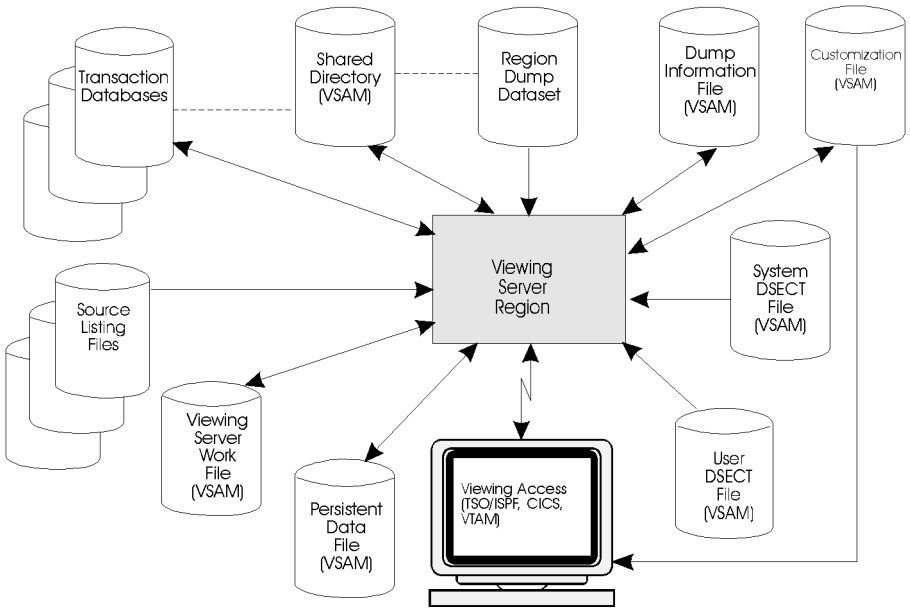

The viewing server handles automatic and manual import of region dumps. If you're using automatic region dump import, the viewing server periodically scans for the presence of new dumps to import. This scan results in minimal CPU overhead, and you can tune the scan interval using the IMPORT_SAMPLE_RATE viewing server configuration parameter.

You can view Abend-AID for CICS dump information from three interfaces: TSO/ISPF, a VTAM application, or CICS. Refer to the *Abend-AID for CICS Installation and Customization Guide* for specifics.

Product Functions

Abend-AID for CICS provides dump navigation and diagnostic functions to help identify the problems that produce CICS transaction abends and region outages. Some of these functions are always available, regardless of whether you have selected a dump to analyze. Collectively, they are referred to as *dump-independent* functions. The remaining functions are available only after you have selected a dump to analyze, and they are specific to either transaction abend or region dump analysis, or by the CICS release level of the selected dump.

Once you select a dump, Abend-AID for CICS displays one of two Primary Options menus. The version for transaction abends is shown in Figure 1-4, and the version for region dumps is shown in Figure 1-5 on page 1-8.

Figure 1-4. Primary Options Menu for Transaction Abend Analysis

```
 Abend-AID for CICS ---------- Primary Options ------------------------------
OPTION  ===>

1  DIAG     Diagnostic Summary        7  FILE     File Request Summary

2  PROG     Program Information       8  *DB2     DB2 Information

3  TRACE    CICS Trace                9  L3270    Last 3270 Screen

4  TERM     Terminal Detail           10 *MQINFO  WebSphere MQ Information

5  TASK     Task Detail               11 *CWI     CICS Web Interface

6  CB       Control Blocks/Storage    12 *LEIN    Language Environment Info


D  DIRECTRY Abend-AID Directory       R  SRCDIR   Source Directory

S  SUMMARY  Fault Summary             U  USER     User Control Facility

X  EXIT     Exit
```

Figure 1-5. Primary Options Menu for Region Dump Analysis

```
 Abend-AID for CICS --------- Primary Options -------------------------------
OPTION  ===>

1  DIAG     Diagnostic Summary        6  MVSINFO  MVS Information

2  TASKS    Task/Wait Analysis        7  IPCS     IPCS Command Facility

3  TRACE    CICS Trace Listing        8  DOMAINS  CICS Domain Analysis

4  CICSINFO CICS Information          9  ZOSSDMP  z/OS SVC Dump Analysis

5  CB       Control Blocks/Storage


D  DIRECTRY Abend-AID Directory       I  IMPORT   Dataset Import

S  SUMMARY  Fault Summary             U  USER     User Control Facility

X  EXIT     Exit                      N  NEWS     Product News
```

Dump-Independent Functions

The following functions are available by entering the associated fast-path command even when no dump is currently selected:

- **Fault Summary** — The Abend-AID for CICS Fault Summary lists the number of transaction, region, and non-CICS entries for each region and each user-defined region group. When you select a region, a region group, or a dump type subset of a region or region group from the Fault Summary, Abend-AID for CICS displays an Abend-AID Directory of the entries specific to your selection.
- **Abend-AID Directory** — The Abend-AID Directory lists the type and number of transaction and region entries available for each described region or region group.
- **Dataset Import** — The import function makes region dumps available to Abend-AID for CICS. Three methods for importing dumps are possible:
  - Automatically via the MVS post-dump exit or the SVC 51 interface
  - Manually from the Dataset Import screen
  - Manually from the MVS console.
- **User Control Facility** — The User Control Facility provides a wide range of administrative features that enable you to tailor the user interface, and access the product customization screens.
- **Source Directory** — The Source Directory displays the source listings/source listing shared directories that have been written to a source support dataset. Although the Source Directory is a dump-independent function, source support is available for transaction entries only.
- **Distributed Viewing Support (DVS)** — This facility lets users view dumps captured at remote sites using source information maintained at a central site. DVS eliminates the need to distribute the source listing information to remote sites in order to view diagnostics for transaction abends in source format.

Transaction Abend Analysis Functions

Abend-AID for CICS lists the following functions on the Primary Options menu for Transaction Abend Analysis (Figure 1-4 on page 1-8):

Note: To access these functions, you must first select a *transaction* entry from the ones listed on the Abend-AID Directory. For information about this directory, refer to "Abend-AID Directory" on page 4-2.

- **Diagnostic Summary** — Abend-AID for CICS conducts a thorough analysis of CICS transaction abends, including DL/I, DB2, Hogan, and MSA abends, and then produces a diagnostic summary to help you determine the cause of the transaction failure.
- **Program Information** — This function identifies all programs involved in an abending task, and it provides direct access to specific program information, such as COBOL linkage, COBOL external data, and program storage.
- **CICS Trace** — You can display internal CICS trace information for an abending task in IBM format. Full, short, and abbreviated trace tables in IBM format are available for CICS Transaction Server for z/OS and OS/390. Full and abbreviated trace tables in IBM format are available for CICS 4.1.
- **Terminal Detail** — This screen provides terminal-related information for the terminal associated with the task at the time of the abend.
- **Task Detail** — This function provides a detailed analysis of the selected task at the time of the transaction abend.
- **Control Blocks/Storage** — The Control Blocks/Storage screen lists the control blocks related to the failing transaction. It also provides access to the dump's hexadecimal storage. In addition, its paperclip function tracks your navigation through storage.
- **File Request Summary** — The File Request Summary lists all files with areas remaining on the storage chain for the abending transaction. For each file, detailed statistics are available, including information on file access and file requests.

- **DB2 Information** — This optional function displays DB2 information such as SQL information, pertinent dates, and DB2 subsystem information.
- **Last 3270 Screen** — This function redisplays the exact screen image displayed when the abend occurred.
- **Duplicate History** — Abend-AID for CICS can suppress duplicate transaction dumps. This capability allows you to track recurring transaction failures without having to store redundant information.
- **MQSeries Information** —If your site is licensed for and has installed the Abend-AID for WebSphere MQ product (formerly Abend-AID E-Business Edition), Abend-AID for CICS provides access to MQSeries information for transaction abends. Refer to the Abend-AID for WebSphere MQ user documentation for additional information.
- **CICS Web Interface Information** — This function provides enhanced diagnostics with web-specific information for the abending application using the CICS Web Inferface (CWI).
- **Language Environment Info** — This option provides access to the Language Environment (LE) information, including the LE Options Control Block screen, which lets customers using Language Environment (LE) easily identify LE runtime options in effect at the time of the failure in their COBOL or PL/I program and the LE Information Summary screen, which also provides LE heap and stack analysis.

Region Dump Analysis Functions

Abend-AID for CICS lists the following functions on the Primary Options menu for region dump analysis (Figure 1-5 on page 1-8):

Note: To access these functions, you must first select a *region* entry from the ones listed on the Abend-AID Directory. For information about this directory, refer to "Abend-AID Directory" on page 4-2.

- **Diagnostic Summary** — Abend-AID for CICS conducts a thorough analysis of a CICS region dump, and then it produces a Diagnostic Summary designed to help determine the cause of the region failure. You can display this summary in either a full-text format for novice users, or an abbreviated format for experienced users.
- **Task/Wait Analysis** — A consolidated Task/Wait Analysis screen lists information from the transaction manager, kernel domain, and dispatcher domain. You can access this screen from the Task/Wait Analysis function listed on the Primary Options menu for region dump analysis.
- **CICS Trace Listing** — For complex problems involving system interactions, you can use the Trace Listing screen to trace the path of application programs. Full, short, and abbreviated trace listings are available in IBM format.
- **CICS Information** — Abend-AID for CICS makes available a great deal of general CICS information. From the CICS Information menu, you have access to the following screens:
  - CICS Environment Summary
  - Program Change Summary
  - DFHRPL Concatenation
  - CICS Resource Managers.
- **Control Blocks/Storage** — The Control Blocks/Storage screen lists the dump control blocks from which you can display information in interpreted, hexadecimal, or DSECT format. It also provides access to a dump's hexadecimal storage. To help with dump analysis, FIND and CHAIN commands are provided. In addition, its paperclip function tracks your navigation through storage.
- **MVS Information** — General MVS information provided by Abend-AID for CICS consists of the following:

  - Summary information about the MVS environment, including job step run time, CPU time, paging statistics, EXCP count, and MVS region size.
  - A TCB summary that includes the TCB address and type, request block address and type, PSW, instruction length, interrupt code, offset, and last instruction. Further, for both CICS and non-CICS dumps, it provides access to the RTM2 work area, the save area trace, and the request block registers for each TCB in the dump.
  - The JES2 SYSLOG that lists the SYSLOG messages for the abending region from the last two JES2 buffers.
  - MVS virtual storage analysis that shows allocations of virtual storage in the Private, Common Service (CSA), and Global System Queue (SQA) areas of address spaces contained in the SVC dump dataset when the dump was taken.
  - Summary that displays a list of programs found in the job pack area (JPA) of the selected address space.
  - Summary that displays a list of programs found in all of the task load lists.
  - Language Environment (LE) information, including an LE information summary from which you can access additional LE heap and stack analysis information.

- **IPCS Command Facility** — If your site elects to use IPCS as an Abend-AID for CICS option, you will have access to an IPCS Command Facility screen from which to enter IPCS commands.
- **CICS Domain Analysis** — The CICS domain analysis function allows you to access summary and detailed information about the following domains.
  - Kernel Domain
  - Storage Manager
  - Dispatcher Domain
  - Lock Manager
  - Loader Domain
  - Local Catalog
  - Domain Manager
  - Parameter Domain
  - Global Catalog
  - Message Domain
  - Trace Domain
  - Dump Domain
  - Timer Domain
  - Statistics Domain
  - Monitoring Domain
  - Application Domain.
  - Directory Manager
  - Program Manager
  - Security Domain
  - Transaction Manager
  - User Domain
  - Temporary Storage Domain
  - Enqueue Manager
  - Recovery Manager
  - Log Manager
  - CBTS Domain
  - CBTS Event Manager
  - CBTS Scheduler
  - Recoverable Resource Manager
  - Sockets Domain
  - Web Listener Domain
  - Document Handler Domain.
- **MQSeries Queue Manager Address Space Analysis** — If your site is licensed for and has installed the Abend-AID for WebSphere MQ product (formerly Abend-AID E-

Business Edition), Abend-AID for CICS provides access to MQSeries queue manager address space information for region dumps. Refer to the Abend-AID for WebSphere MQ user documentation for additional information.

- **CICS Web Interface Information** — This function provides enhanced diagnostics with web-specific information for CICS region dumps using the CICS Web Inferface (CWI).
- **z/OS SVC Dump Information** — This function provides information about SVC dumps in the z/OS environment, including information from the prefixed saved area (PSA), the communications vector table (CVT), the address space control block (ASCB), and the address space extension block (ASXB). It also provides a summary of the subsystems found in the dump and detailed information for each of the address spaces active in the MVS image at the time of the dump. This function also displays the address of the SVC dump parameter list and the settings at the time of the dump.

General Features

Abend-AID for CICS has several features that enhance its analysis capabilities, including the following:

- Tab-selectable fields that display control blocks in interpreted, hexadecimal, or DSECT format, or that display additional related information.
- WHO, MATCH, and WHERE analysis commands for region dumps that enable you to determine the ownership of any piece of storage, the tasks having addressability to the storage, and the location and ownership of data that matches data having overlaid storage.
- Extensive print capabilities that allow you to print individual screens, groups of screens, formatted DSECTs, and storage.
- Screen attributes you can customize to change screen colors, to turn screen borders on or off, to turn reverse video on or off, and to show or hide line command and screen footer information.
- A FIND command that is available on all scrollable screens, including storage displays.
- A facility that allows you to define your own control blocks to the system, so that Abend-AID for CICS can display them in DSECT format.
- A notepad facility that you can use to maintain notes (ISPF access only).
- A REXX application program interface (API) that lets you process REXX EXECs against transaction and region dumps.

Online Help

Online help is available for any Abend-AID for CICS screen, field, system message, or command.

Screen Help

Screen help explains the purpose of each screen. To display screen help, use either of the following methods:

- Position the cursor *off* any data field or system message, and then press PF1. (PF1 is the default Help key.)
- Type **HELP** in the COMMAND (or OPTION) field on any Abend-AID for CICS screen, including field-level help screens, and then press the Enter key.

Field Help

At a minimum, field help defines a field's label; for example, "TCB is the task control block." In many cases, field help also describes the purpose of the field and how to use the information it contains. To display field help, use either of the following methods:

- Position the cursor on the field, and then press PF1.
- Type **HELP** in the COMMAND field, move the cursor to the appropriate field, and then press the Enter key.

Message Help

Abend-AID for CICS displays error, warning, and informational messages on the third line of each screen. To display help text that explains the meaning and significance of these messages, use one of the following methods:

- Position the cursor on the message, and then press PF1.
- Type **HELP** in the COMMAND (or OPTION) field, position the cursor on the message, and then press Enter.
- Type **MSGHELP** *messageid* in the COMMAND (or OPTION) field, and then press Enter.

  Note: To use this method, drop the first three characters and the last character of the message ID. For example, to display help text for message FDBSI0052E, type: **MSGHELP SI0052**. For example, to display help text for message MFDINxxxxx, type:

```
MSGHELP INxxxxx
```

With the MSGHELP command, you can display the help text of any message — even messages not currently displayed.

Note: Depending upon your site's configuration and how you accessed a particular screen, the MSGHELP command may not be available for some messages.

Command Help

Command help describes the function, syntax, and restrictions (if any) of primary and fast-path commands. If warranted, an example showing the use of the command is also provided.

- In the COMMAND (or OPTION) field, type **HELP** followed by the name of the command. Then press the Enter key. For example, to display help text for the FIND command, type:

```
HELP FIND
```

- Type either **CMDLIST** or **HELP COMMANDS** in the COMMAND (or OPTION) field, and then press Enter to display the list of commands. Place the cursor on the desired command, and then press Enter.
- Position the cursor on the line command or its descriptive text, and then press Enter.

To list the commands *available* from the currently displayed screen or field, use the ASSIST command or press PF24. (PF24 is the default ASSIST key.) For more information, refer to "ASSIST" on page 18-3.

Notes:

1. ASSIST is valid on only some screens at the screen level, but is available for all tab-selectable fields.

2. To display the current PF-key settings, type **KEYS** in the COMMAND (or OPTION) field, and then press Enter.

Chapter 2. Getting Started

This chapter describes the following procedures:

- Logging onto Abend-AID for CICS from ISPF/PDF, VTAM, or CICS
- Selecting a viewing server
- Selecting an entry from the Abend-AID Directory
- Exiting Abend-AID for CICS.

Logging onto Abend-AID for CICS

Abend-AID for CICS supports the following access methods:

ISPF/PDF Select the option defined for Abend-AID for CICS on your ISPF/PDF Primary Option (or other) menu, or execute the CLIST defined for Abend-AID for CICS.

VTAM If your site uses a session manager, Abend-AID for CICS may be defined as an option that you can select from the application selection (or other) menu.

If your site has not defined Abend-AID for CICS as a menu option, enter the following logon command:

```
LOGON APPLID(applid-name)
```

Note: The parentheses are required as shown.

Once you enter the logon command, Abend-AID for CICS displays the Server Logon screen, which shows your terminal ID in the Userid field by default. Enter your user ID in this field if you want to use the settings established in your user profile. Refer to Chapter 17, “Setting User Controls” for additional information. If your site is using external security, you must enter your user ID and password.

CICS Enter an AADF transaction command directly from CICS on any blank screen. The following AADF transaction commands are valid:

Notes:

1. Before you can access Abend-AID for CICS from CICS, the transaction dump interface must be active in the CICS region. For specifics, refer to Appendix A, “Supplied Transaction”.

2. If you do not sign onto CICS, the CICS DFLTUSER parameter (CICSUSER) is used to access Abend-AID for CICS. User profile changes may take effect only temporarily because multiple users can change the same profile.

- **AADF:** Displays the Abend-AID Directory for all transaction and region abends matching the job name of the CICS region.

- **AADFS:** Displays the Fault Summary.

- **AADFT:** Displays the Diagnostic Summary for the most recent transaction abend that occurred at your terminal in the CICS region.
- **AADFTM:** Displays the Primary Options menu for the most recent transaction abend at your terminal in the CICS region.
- **AADFX:** Displays the Diagnostic Summary for the most recent transaction abend in the CICS region.
- **AADFXM:** Displays the Primary Options menu for the most recent transaction abend in the CICS region.
- **AADF number:** Displays the Diagnostic Summary for the specified directory entry.
- **AADM:** Displays the Abend-AID for CICS demonstration transaction menu.

For the steps required to establish these access methods, refer to the *Abend-AID for CICS Installation and Customization Guide*.

Selecting a Viewing Server (ISPF Access Only)

If you're accessing from ISPF and your site has only one active viewing server, Abend-AID for CICS automatically logs you onto that viewing server and displays the Fault Summary screen. However, if your site has more than one active viewing server, Abend-AID for CICS displays the Server Selection screen. As shown in Figure 2-1, this screen lists the viewing servers currently active on your system.

Figure 2-1. Server Selection Screen

```
Abend-AID for CICS 5.1 ----- Server Selection  ---------------- ROW 1 TO 2 OF 2
COMMAND ===>                                                  SCROLL ===> CSR
                     Copyright Compuware Corporation 1994-2004

Current Server Name: SERVER2

Press Enter to reselect the current server, or place your cursor on a listed
server and press Enter.

 Name        Description
 SERVER1     Fault Management Server1
 SERVER2     Fault Management Server2
****************************** BOTTOM OF DATA ********************************
```

To select a viewing server, place the cursor on the appropriate application ID (APPLID) and press Enter. After you select a viewing server, its APPLID is retained in your ISPF profile. To select this same viewing server in the next session, simply press Enter from the Server Selection Screen.

Note: To change viewing servers, you must first exit Abend-AID for CICS. For the supported methods, refer to "Exiting Abend-AID for CICS" on page 2-4.

To bypass the Server Selection screen and reselect the last viewing server you accessed, type **X.P** in the Option field on the ISPF/PDF Primary Option Menu, where **X** is the site-defined option for Abend-AID for CICS. The Fault Summary screen, which is described in "Fault Summary" on page 4-1, is displayed.

Selecting an Entry

The Fault Summary is the first screen displayed if you access from ISPF or VTAM, and the Abend-AID Directory is the first screen displayed if you access from CICS. Refer to Chapter 4, "Working with Dumps" for a detailed description of these screens. With ISPF or VTAM access, you can also automatically reselect the last dump you were viewing by enabling this functionality using the User Profile screen, as described in "User Profile Screen" on page 17-1.

Note: Automatically reselecting the last dump is not supported if you are using CICS access.

Tab to a field on the summary that reflects the directory entries you want to see, and press Enter to display the Abend-AID Directory. You can select an entry from the Abend-AID Directory in one of three ways:

- Type an **M** next to the entry you want to select and press Enter. This line command selects the entry and displays the Primary Options menu. A system message on the menu confirms the current entry number.
- Type an **S** next to the entry you want to select and press Enter. This line command selects the entry and displays the diagnostic summary that Abend-AID for CICS has generated for it. A system message on the diagnostic summary confirms the current entry number.
- Place the cursor next to the appropriate entry number and press Enter. Like the **M** line command, this action selects the entry and displays the Primary Options menu.

Regardless of the method you use, all Abend-AID for CICS functions that are dump-dependent become available once you have successfully selected an entry.

Note:

The following Abend-AID for CICS functions are available *only after you have selected an entry from the Abend-AID Directory*:

- Transaction Entry Functions
  - Diagnostic Summary
  - Program Information
  - CICS Trace
  - Terminal Detail
  - Task Detail
  - Control Blocks/Storage
  - File Request Summary
  - DB2 Information
  - Last 3270 Screen image.
- Region Entry Functions

- Diagnostic Summary
- Task/Wait Analysis
- CICS Trace
- CICS Information
- Control Blocks/Storage
- MVS Information
- IPCS Command Facility

  Note: This function also requires installed IPCS support.

- CICS Domain Analysis

Exiting Abend-AID for CICS

To exit Abend-AID for CICS from any screen, type **EXIT** or **=X** in the COMMAND (or OPTION) field, and then press Enter.

Pressing the END PF key backs you out, one screen at a time. PF3 is the default END PF key. Pressing the RETURN PF key returns you to either the Fault Summary (ISPF or VTAM access) or the Abend-AID Directory (CICS access). PF4 is the default RETURN PF key. Press the END PF key to exit from either of these screens.

If you want Abend-AID for CICS to display a confirmation window before exiting the product when you press the END PF key from the Fault Summary or the Abend-AID Directory, enable this functionality by using the User Profile screen, as described in "User Profile Screen" on page 17-1.

Chapter 3.
Abend-AID for CICS Interface

This chapter describes the general format of Abend-AID for CICS screens and the different methods available for accessing them.

Screen Layout

All Abend-AID for CICS screens have the same basic format. As shown in Figure 3-1, a title line, a command line, and a message line comprise the first three lines.

Note: Menu screens list an OPTION field on the command line; data screens list a COMMAND field.

Figure 3-1. Basic Screen Format (Borders On)

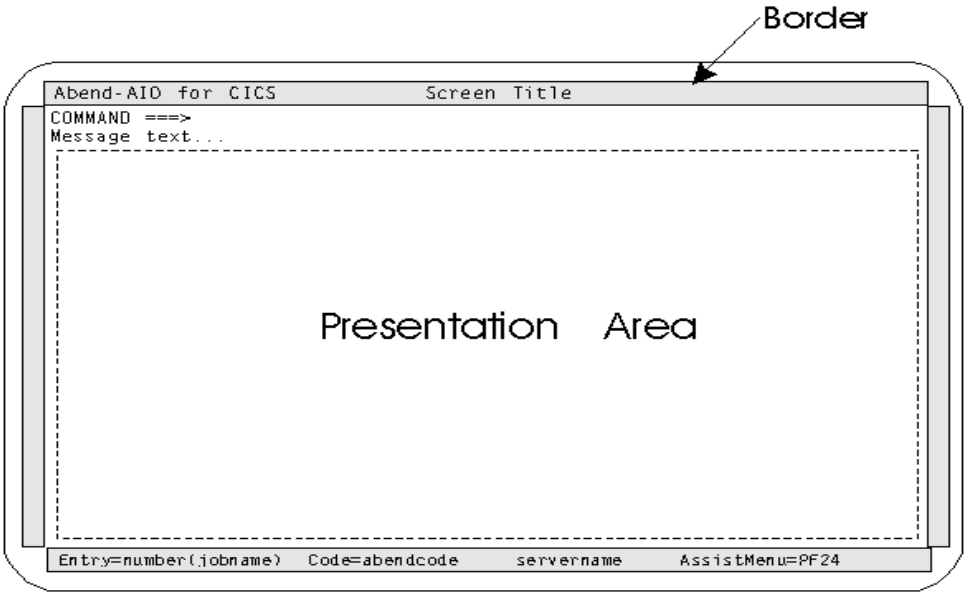

Following the message line is the *presentation area*, which consists of menu selections or data fields whose arrangement and content differ from screen to screen. In addition, Abend-AID for CICS dynamically adjusts the information displayed in the presentation area, based on your terminal size.

The last line displays the currently selected entry's identification number, job name, abend code, and viewing server name. It also identifies the PF key for listing the commands available from the screen. Initially, this default is PF24 for the commands list. For more information, refer to "Modifying PF Key Functions" on page 17-7. Additionally, after the PF key setting, More ... is displayed as the last item in the last line if the screen extends beyond one page.

Note: The information displayed on the last line appears only if screen borders are turned *on*.

For complete information about the currently selected dump, use the INFO fast-path command or press the INFO PF key. (PF20 is the default.) Refer to "Transaction Entry Information Screen" on page 4-7 and "Region Entry Information Screen" on page 4-8 for an explanation of the information available using the INFO command or PF key.The remainder of this section describes the following screen components:

- Screen borders
- Scroll information fields
- COMMAND and OPTION fields
- Line commands
- Screen attribute defaults.

Screen Borders

You can display Abend-AID for CICS screens with a partial border or with a full border (Figure 3-1 on page 3-1). The top border is always displayed, but you can choose to display the side and/or bottom borders. The default for the border display is set in the User Profile screen's Display screen borders field. To override this default for the *current* session only, type the BORDERS command with the appropriate parameters in the COMMAND (or OPTION) field on any Abend-AID for CICS screen and press Enter. For the BORDERS command's syntax, refer to "BORDERS" on page 18-4. For information on setting the color of the border, refer to "Screen Attributes" on page 17-3. For information on setting other defaults on the User Profile screen, refer to "User Profile Screen" on page 17-1.

Scroll Information Fields

The presentation area on Abend-AID for CICS screens can contain a *fixed* data area, a *scrollable* data area, or both. As shown in Figure 3-2, the fixed data area, if present, appears above the scrollable data area. Further, some screens contain an additional fixed data area that appears at the bottom of the screen.

Figure 3-2. Data Screen with Fixed and Scrollable Areas

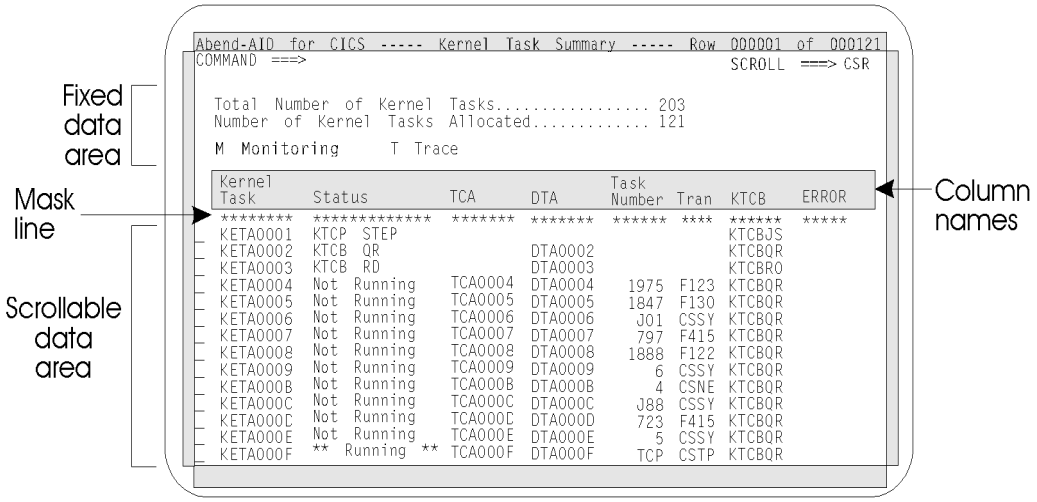

You cannot change the relative position of the fields listed in a fixed data area. In addition, the IBM terminal emulation you are using has no effect on their arrangement.

Note: You can display Abend-AID for CICS on any terminal or PC emulating either an IBM 3270 (MOD2 through MOD5), or an IBM 3290.

Scrollable data areas, in comparison, automatically expand or contract to fill the available screen space. For example, a screen emulating an IBM 3270 MOD2 terminal displays up to 24 rows of information in an 80-character format (Figure 3-2 on page 3-2), but a screen emulating a MOD5 terminal displays up to 27 rows of information in a 132-character format.

Masking and Sorting

The scrollable data area includes a *mask line* that you can use to tailor the contents of the scrollable data area. The mask acts as a filter, and only the list entries that match each column mask value are displayed in the scrollable data area. To mask the data in any column, type the characters of the data you wish to display, and press Enter. The asterisk (*) character is the wildcard character.

For example, to display Kernel Task Summary information only for kernel tasks with a transaction ID beginning with the characters CS, enter **CS**** in the mask line in the **TRAN** column.

To reset the column mask to all wildcard characters for an individual column, clear the column mask using the space bar or the Erase EOF key.

You can also sort the scrollable column data by each of the column headings by using the SORT primary command. This command rearranges the column data alphabetically or chronologically, depending on which column you choose to sort by. Refer to “SORT” on page 18-28 for more information.

To reset the column mask for all table columns and to reset the column sort, use the RESET primary command, which is described in “RESET” on page 18-25.

By default, Abend-AID for CICS does *not* restore the mask and sort parameters from your last session on the Abend-AID Directory and the Source Program Directory. To enable this functionality in your user profile, refer to “User Profile Screen” on page 17-1.

Row Field

Screens that have an up/down scrollable area include a Row field in their title line. This field lists two numbers: the row number of the first row currently displayed and the total number of rows in the scrollable area. For example, in Figure 3-3, Row 00001 of 00121 indicates that the first row currently displayed is also the first row of 121 total rows.

Figure 3-3. Location of Scrolling Information Fields

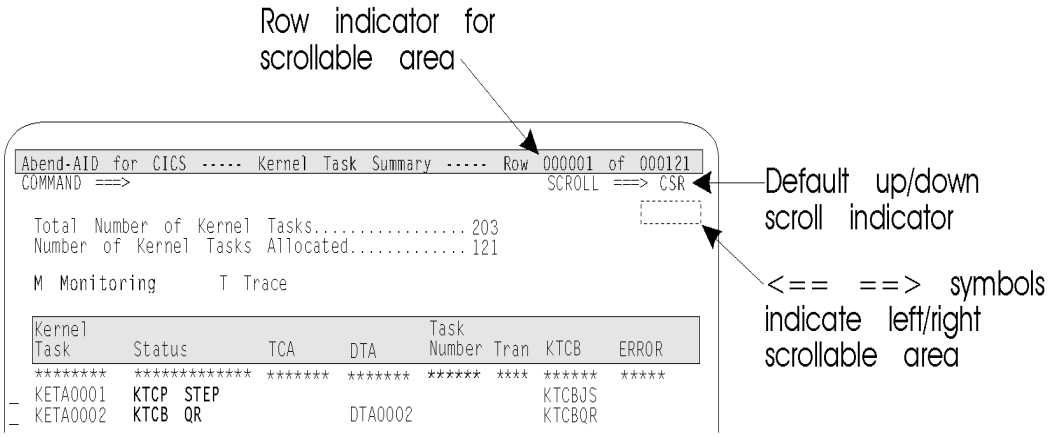

Up/Down Scroll Field

Screens that have a scrollable area also have a SCROLL field listed immediately below the Row field. To scroll through the data, press the UP and DOWN PF keys. (PF7 and PF8 are the defaults.) The number of rows scrolled depends on the SCROLL field's listed value, such as CSR, PAGE, or MAX. To change the scroll amount, overtype the listed value with a different amount. (Abend-AID for CICS supports the same scroll amount values used in ISPF.) You also can use the UP, DOWN, TOP, and BOTTOM commands to scroll through the data. For information about the UP and DOWN commands, refer to "Default PF Key Definitions" on page 17-5, and for information about the TOP and BOTTOM commands, refer to Chapter 18, "Primary Commands".

Left/Right Scroll Field

Some screens have a left/right scrollable area. If so, left (<==) and right (==>) arrow symbols appear immediately below the SCROLL field (Figure 3-3 on page 3-3). If the screen scrolls in only a left or right direction, then only the arrow indicating that direction is shown.

To scroll left or right, press the LEFT or RIGHT PF key. (PF10 and PF11 are the defaults.) The number of columns scrolled depends on the SCROLL field's listed value. You also can use the LEFT and RIGHT commands to scroll through the data. For information about these commands, refer to "Default PF Key Definitions" on page 17-5.

COMMAND and OPTION Fields

All data screens have a COMMAND field on their command line, as shown in Figure 3-4. In comparison, all menu screens have an OPTION field on their command line. Though these two fields have different names, they perform the same function of providing a location from which you can execute Abend-AID for CICS commands.

Figure 3-4. Location of Command Fields

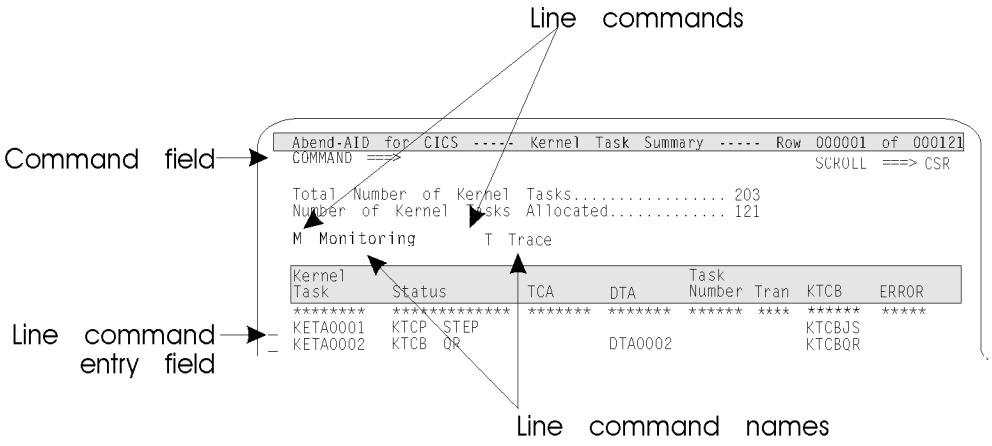

Not all commands are available from every screen, however. To display the entire command list for Abend-AID for CICS, type **CMDLIST** or **HELP COMMANDS** in the COMMAND or OPTION field, and then press Enter. For a description of primary commands, refer to Chapter 18, "Primary Commands". You can also display the description for any command by typing **HELP *command-name*** and pressing Enter. For example, typing **HELP MAPD** displays information describing the function and syntax of the MAPD command.

Line Commands

As shown in Figure 3-4, some data screens also display single character *line commands* that you can execute against the entries listed. To execute a line command, tab the cursor to the desired line command entry field, type the character assigned to the command, and press Enter.

For general information about line commands, perform either of the following two procedures:

- Type **HELP** in the COMMAND field, position the cursor on any line command entry field, and press Enter.
- Position the cursor on any line command entry field and press the HELP PF key. (PF1 is the default.)

For specific information about a single line command, perform one of the following procedures:

- Type **HELP** in the COMMAND field, position the cursor on the line command or its name, and press Enter.
- Position the cursor on the line command or its name and press the HELP PF key.
- On the general help screen for line commands, position the cursor on the desired line command and press the HELP PF key.

Screen Attribute Defaults

All fields and screen areas have assigned highlighting, color, and interactive defaults. Abend-AID for CICS uses these defaults to differentiate the types of information it can display. Figure 3-5, for example, highlights the colors Abend-AID for CICS uses to specify field names, field data, and tab-selectable field data.

Figure 3-5. Data Screen Default Colors

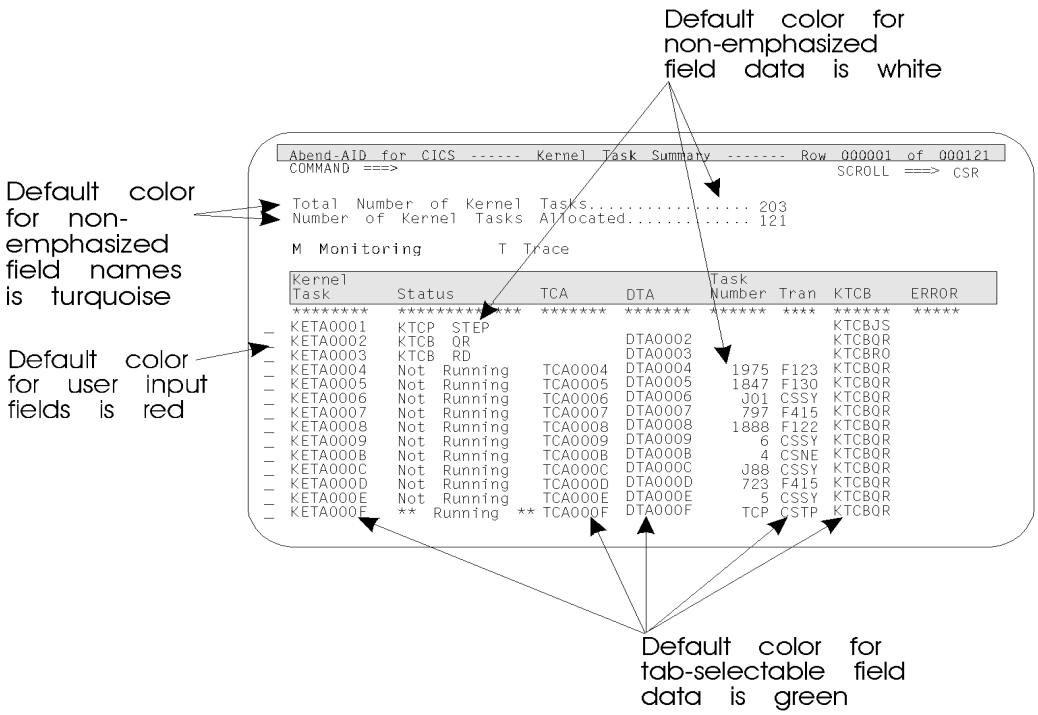

Note: If you have changed your default ISPF colors, those changes override the Abend-AID for CICS defaults when Abend-AID for CICS is accessed from ISPF.

You have the option to change field and screen area defaults to suit your own tastes. For specifics, refer to "Screen Attributes" on page 17-3.

Screen Access

Abend-AID for CICS offers a variety of methods for navigating from screen to screen. These methods include selecting screens directly from the menus, using the cursor *point-and-shoot* feature, or executing simple navigation commands. In addition, several PF key defaults directly access specific screens. (For PF key specifics, refer to "PF Keys" on page 17-5.) This flexibility allows both novice and expert Abend-AID for CICS users to have easy access to needed information.

Menu Selections

To select an option from a displayed menu, type the option's alphanumeric selection character or its mnemonic identifier in the OPTION field. Then press Enter. For example, to select the Diagnostic Summary from the Primary Options menu (Figure 3-6), type **1** or **DIAG** in the OPTION field and press Enter. Tabbing the cursor to the option's mnemonic identifier (DIAG) and pressing Enter accomplishes the same result.

Note: If a menu option is not available for the transaction abend you have selected, an asterisk (*) precedes the mnemonic identifier, and the identifier is displayed in a different color than the available options.

Figure 3-6. Primary Options Menu for Transaction Abend Analysis

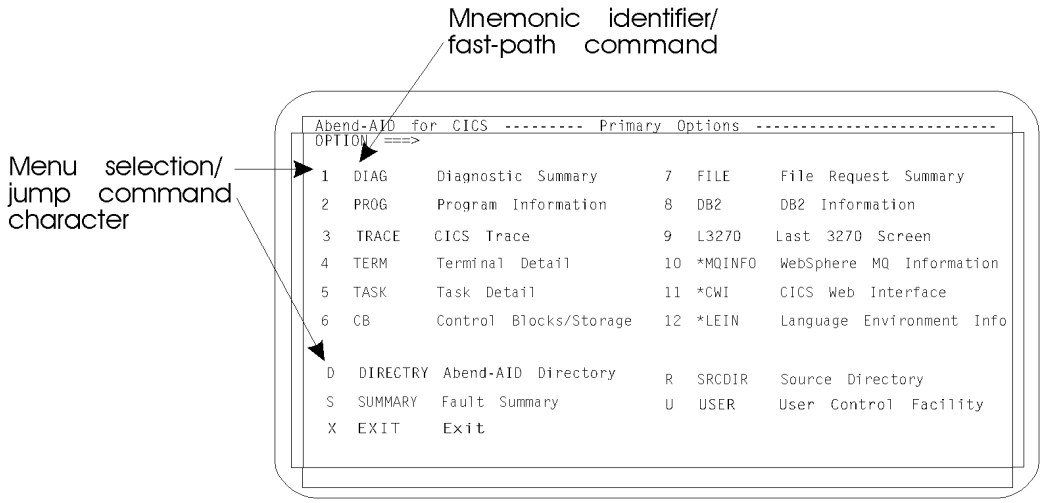

Cursor Point-and-Shoot Feature

The cursor point-and-shoot feature gives you direct access to specific locations in storage and to detailed information about specific data elements.

To use this feature, execute one of the following procedures:

- Type in the COMMAND field the command you want to execute, for example, DECODE, DISASM, HEXD, or WHERE. Then tab the cursor to the applicable storage address or key data element field and press Enter.

  Note: By default, tab-selectable fields are green.

- Tab the cursor to the applicable storage address or key data element field, and then press the PF key associated with the command you want to execute. Initial PF key defaults are set for the following commands:
  - DISASM (PF17)
  - HEXD (PF18)
  - DSECT (PF19)
  - WHO (PF21) - Region dumps only
  - MATCH (PF22) - Region dumps only
  - ASSIST (PF24).
- Tab the cursor to a storage address or key data element field, and then press the Enter key. The screen that Abend-AID for CICS displays depends on the content of the selected field. If there is no default action, a window is displayed showing available actions.

Using a Mouse with the Point-and-Shoot Feature

If you're using an emulator to access Abend-AID for CICS from a workstation, you may be able to use your mouse with the point-and-shoot feature. To enable point-and-shoot hotspots with IBM's Personal Communications for Windows, do the following:

1. From the Assist pull-down menu, select **Hotspots Setup**.
2. Check the box preceding **Point-and-Select (ENTER at cursor position)**.
3. Click **OK**.

You now have direct access to specific locations and to information about specific data elements by double left-clicking on the highlighted field. If you're using another emulator to access Abend-AID for CICS, refer to its user documentation/help to determine if it supports this feature and for the procedure to enable point-and-shoot hotspots.

ASSIST Function

The ASSIST command displays the commands that are available for the current screen or field. Pressing the ASSIST PF key also executes this command (PF24 is the default). For example, to list the commands available for the current screen, tab to the COMMAND field and press the ASSIST PF key, or type **ASSIST** in the COMMAND field, and press Enter. To list the commands available for a specific field, tab to the field and press the ASSIST PF key, or type **ASSIST** in the COMMAND field, tab to the field, and press Enter. If the current screen or field has no commands associated with it, a message is displayed indicating that the ASSIST function is not available.

Navigation Commands

Most Abend-AID for CICS screens have a unique mnemonic identifier, such as **DIAG** for the Diagnostic Summary or **TASK** for Task Detail. In addition, every screen *listed as a menu option* has an assigned alphanumeric selection character. For example, on the Primary Options menu shown in Figure 1-4 on page 1-8, the Diagnostic Summary's selection character is **1** and the Task Detail selection character is **5**.

Note: Some Abend-AID for CICS screens are not accessible directly from the menus, but instead are accessible directly from other data screens.

Fast-Path Commands

A screen's mnemonic identifier is also referred to as its *fast-path command*. You can directly access a screen simply by typing its fast-path command in the COMMAND or OPTION field on any other screen and pressing Enter. For example, entering **MAIN** or **MM** on any Abend-AID for CICS screen, returns you to the Primary Options menu.

Additionally, some fast-path commands require parameters. To execute these commands, type the command, a period, and then the parameter. For instance, to display the FCT Detail screen for local file BDAMFILE, type **FCTE.BDAMFILE** in the COMMAND (or OPTION) field and press Enter.

To determine a command's syntax, type **HELP *cmdname*** in the COMMAND (or OPTION) field and press Enter. For example, **HELP CORE** displays a pop-up window describing the CORE command's syntax.

Jump Commands

Another method for accessing screens directly is to use *jump commands*. These commands are ISPF-like selection strings that uniquely identify the screens accessible from the menus.

For example, to access the Program Link Information screen for a transaction abend, which is the first selection on the Program Information menu, type **=2.1** or **>2.1** in any screen's COMMAND (or OPTION) field and press Enter. The number **2** starts the command string, because the Program Information menu is the second selection on the Primary Options menu for transaction abends (Figure 1-4 on page 1-8).

You can include mnemonic identifiers/fast-path commands in jump command syntax. For example, either of the following jump commands access the Task Summary screen for a region dump:

```
=TASKS.1
>2.TASKSUM
```

By definition, a jump command is preceded by either an equal sign (=), or a greater-than sign (>). Preceding a jump command with an equal sign routes a screen's access through the Primary Options menu. As a consequence, exiting the resultant screen with the END command (PF3) displays the Primary Options menu, rather than the screen from which you typed the jump command. In comparison, using the greater-than sign causes Abend-AID for CICS to redisplay the screen from which you typed the command.

Primary Commands

Abend-AID for CICS primary commands perform specific functions such as screen manipulation, cursor movement, and dump information access and display. Examples of primary commands are ASSIST, FIND, HELP, PRINT, WHERE, and WHO. To execute a primary command, type the command in the COMMAND (or OPTION) field and press Enter. Refer to Chapter 18, "Primary Commands" for a description of each Abend-AID for CICS primary command and its syntax.

To determine a particular command's syntax while you're using Abend-AID for CICS, type **HELP *cmdname*** in the COMMAND (or OPTION) field and press Enter. For example, **HELP FIND** displays a pop-up window describing the FIND command's syntax.

Command Availability

A small subset of fast-path and primary commands is always available, even when you have not selected a dump from the Abend-AID Directory. A few additional fast-path and primary commands become available once you select a *non-CICS* entry from the directory. Most commands, however, become available only after you select a CICS Transaction Server for z/OS or OS/390 entry from the directory.

To determine which commands are available, type **CMDLIST** or **HELP COMMANDS** in the COMMAND (or OPTION) field and press Enter. A scrollable display appears that lists the commands in alphabetical order.

Chapter 4. Working with Dumps

This chapter describes the following Abend-AID for CICS screens that enable you to select and analyze Abend-AID for CICS entries and to display basic information about them:

- Fault Summary
- Abend-AID Directory
- Entry Information (for transaction or region entries)
- Duplicate History Log
- Contact Information.

Fault Summary

The Fault Summary is the first screen displayed when you access Abend-AID for CICS from VTAM or ISPF. You can also use the AADFS transaction command to display the Fault Summary from CICS. To bypass the Fault Summary as the first screen, set the Automatically reselect last dump viewed user profile option to **Y**, as described in "User Profile Screen" on page 17-1.

The Fault Summary summarizes the type and number of transaction and region entries available for each CICS region or region group to which you have assigned a name. Non-CICS entries are also listed.

Region groups are created during Abend-AID for CICS customization as part of the CICS Region Configuration function. This function allows you to group CICS regions together by name so that the Fault Summary reflects total counts for all regions in the group. If you choose not to create region groups, individual CICS job names are used as region descriptions on the Fault Summary. Refer to the *Abend-AID for CICS Installation and Customization Guide* for information about configuring CICS regions.

As shown in Figure 4-1 on page 4-2, the Fault Summary lists entries by the region or region group to which they belong. The list is in alphabetical order. If your site defined them, region groups are alphabetized at the top of the list, followed by an alphabetized list of regions. To select an entire region or region group, place the cursor on the appropriate Region Descriptions name and press Enter. To select either a single entry type or all entries from a region or region group, place the cursor on the appropriate numeric value and press Enter. Abend-AID for CICS displays a directory tailored to your selection.

To display the standard Compuware copyright/trade secrets notice, press Enter at the COPYRIGHT field.

Figure 4-1. Fault Summary

```
 Abend-AID for CICS ---------- Fault Summary ------------ Row 000001 of 000012
COMMAND ===>                                                  SCROLL ===> DATA

Job Name or              CICS    CICS     MVS      IMS/TM   Other    Total
Application Description  Trans   Region   Batch    Trans    SVC      SVC
TOTAL ENTRIES                2       13     132         0      26       39
CICS PD/MVS Samples          0        0       0         0       6        6
CICS5.2.0 DB2 5.1            0        0       0         0       0        0
Development Testing         74       12       0         0       0       12
DB2 V810 testing             0        0       0         0       2        2
Training Dept.               0        1       0         0       1        2
Customer Service Dept        6        0       0         0       0        0
Other CICS Regions           5        2       0         0       2        4
PL/I testing                 1        0       0         0       0        0
Quality Assurance           40        0       0         0       0        0
COBOL testing               10        2       0         0       0        2
Region 7                     4       12       0         0       3       15




Online Technical Support available at: frontline.compuware.com
To display Copyright/Trade Secret notice select COPYRIGHT
```

To display the Fault Summary from any Abend-AID for CICS screen, enter **SUMMARY** as a fast-path command. The Fault Summary is also available as a selection on the Primary Options menu.

Abend-AID Directory

When you select a CICS region or region group from the Fault Summary, Abend-AID for CICS automatically displays the Abend-AID Directory. With CICS AADF access, the directory is the first screen displayed by default unless you enter an alternate AADF transaction command as described in "Logging onto Abend-AID for CICS" on page 2-1. As shown in Figure 4-2 on page 4-3, the Abend-AID Directory provides information about the region and transaction entries. This information is presented on a maximum of four left/right scrollable screens, depending on the width of the terminal.

To display the Abend-AID Directory from any other Abend-AID for CICS screen, enter **DIRECTRY** as a fast-path command. Entering the command without any parameter displays the directory entries based on your last selection for the current session made on the Fault Summary. To display all the entries on the Abend-AID Directory, enter **DIRECTRY ALL** as a fast-path command.

Automatically Restoring Mask and Sort Values

By default, Abend-AID for CICS does *not* automatically restore the mask and sort criteria from your last session on the Abend-AID Directory. To enable this functionality, use the User Profile screen, as described in "User Profile Screen" on page 17-1.

Note: Even if you specify on the User Profile screen that your last mask and sort values be automatically restored, tab-selecting a region or region group from the Fault Summary, or entering the DIRECTRY ALL fast-path command resets the mask and sort criteria. To avoid resetting the mask and sort values from your last session when you reaccess Abend-AID for CICS from ISPF or VTAM, use the DIRECTRY fast-path command without any parameters to display the Abend-AID Directory. If you are reaccessing from CICS, execute the AADF transaction to display the Abend-AID Directory with the mask and sort values from your previous session.

Figure 4-2. Scrollable Screens (Left to Right) Comprising the Abend-AID Directory

```
 Abend-AID for CICS ------- Abend-AID Directory --------- Row 000001 of 000150
COMMAND ===>                                                SCROLL ===> DATA
                                                                         ==>
M Menu      L Lock      H Dup History    R Recall      T Terminate Analysis
S Diag      U Unlock    I Information    E Migrate     C Change Priority
D Delete    G Messages  A Analyze        P Print       N Contact Information

                    Abend
  Entry   Job Name Code     JESID    Tran Program  Offset Dups Time  Date
  ******* ******** ******** ******** **** ******** ****** **** ***** *********

Type a line command and press Enter to process it
```

```
 Abend-AID for CICS ------- Abend-AID Directory --------- Row 000001 of 000150
COMMAND ===>                                                SCROLL ===> DATA
                                                                <== ==>
M Menu      L Lock      H Dup History    R Recall      T Terminate Analysis
S Diag      U Unlock    I Information    E Migrate     C Change Priority
D Delete    G Messages  A Analyze        P Print       N Contact Information

                    Abend                                          LE
  Entry   Job Name Code     Release/Type Status    Term Userid   Condition Data
  ******* ******** ******** ************ ********* **** ******** ********  ****
```

```
 Abend-AID for CICS ------- Abend-AID Directory --------- Row 000001 of 000150
COMMAND ===>                                                SCROLL ===> DATA
                                                                <== ==>
M Menu      L Lock      H Dup History    R Recall      T Terminate Analysis
S Diag      U Unlock    I Information    E Migrate     C Change Priority
D Delete    G Messages  A Analyze        P Print       N Contact Information

                    Abend
  Entry   Job Name Code     Dataset Name                                  Commen
  ******* ******** ******** ******************************************** ******
```

```
 Abend-AID for CICS ------- Abend-AID Directory --------- Row 000001 of 000150
COMMAND ===>                                                SCROLL ===> DATA
                                                                <==
M Menu      L Lock      H Dup History    R Recall      T Terminate Analysis
S Diag      U Unlock    I Information    E Migrate     C Change Priority
D Delete    G Messages  A Analyze        P Print       N Contact Information

                    Abend
  Entry   Job Name Code     Datase Comments
  ******* ******** ******** ****** ********************************************
```

Information listed on the Abend-AID Directory includes the following:

- Abend-AID for CICS entry number
- MVS job name

- MVS or CICS abend code
- JES job ID
- Date and time of dump occurrence
- CICS release (if applicable) and type of dump, such as SVC, SLIP, or TRAN (transaction entry)
- Processing status, such as RUNNING or COMPLETE
- User ID of the last person to view the *region* dump, or for *transaction* entries, the user ID associated with the abended transaction
- Dump dataset name or transaction database
- User comments or symptom string (default for region dumps). Information in this field may be overtyped.

The Abend-AID Directory also includes the following information specific to *transaction* entries only:

- Name of the controlling transaction that abended
- Name of the active program associated with the task
- Abending instruction offset
- Number of duplicate dump suppressions
- CICS terminal ID of the terminal associated with the task.

Types of Directory Entries

Listed on the Abend-AID Directory are dump entries and *information-only* entries (region dumps only). These two entry types affect the information that the directory displays and the functions of its line commands. To determine an entry's type, check its Release/Type field. An INFO dump type indicates an *information-only* region entry. All other values in the Release/Type field indicate a specific dump type, for example, SVC or SLIP.

An *information-only* entry appears on the Abend-AID Directory when the listed dump is not available to the server. Several conditions can be the cause. For example, the dump copy may have failed or the dataset is not cataloged. A dump signature mismatch can also be the cause. A mismatch occurs when the dataset containing the dump is overwritten from outside Abend-AID for CICS with new data.

Deleting a region dump dataset from outside Abend-AID for CICS will also generate an *information-only* entry. At initialization, the server checks whether each region dump dataset in the Abend-AID Directory is available on DASD. If it finds a dataset has been deleted, it changes the dump status for all address spaces in that dataset to INFO, and it deletes all Abend-AID for CICS information about them except the directory entry. Abend-AID for CICS also writes an error message to the System Messages field on the Entry Information screen. For information about this screen, refer to "Region Entry Information Screen" on page 4-8.

Line Commands

With the Abend-AID Directory's line commands, you can select individual entries for viewing or for performing maintenance functions against. The specific tasks performed by the line commands are as follows:

M Selects the entry and displays the Primary Options menu. A system message on the menu displays the dump's entry number and job name and indicates that the dump has been successfully selected. Once a dump is selected, identifying information about the dump is displayed on the last line of the screen. If you use the BORDERS command to suppress the bottom border, however, this information does not appear. For more information about the BORDERS command, refer to "BORDERS" on page 18-4. The next time you display the Abend-AID Directory, it highlights the currently selected entry.

Notes:

1. You can select any entry for display that is not an INFO type, or whose Status field lists a value other than NOT SEL. If the status is COMPLETE, all functions are available.

2. Pressing Enter at an entry functions like the M line command. The entry is selected and the Primary Options menu is displayed.

S Selects the entry and displays the entry's Diagnostic Summary, which is the logical starting point for debugging the majority of CICS dumps. For this line command to function, the entry must have a COMPLETE status in its Status field.

D Deletes the entry. The **D** line command functions as follows:

- **Transaction dump:** Abend-AID for CICS deletes the entry from the directory and information from the transaction database. Abend-AID for CICS displays a confirmation window by default from which to confirm or cancel the delete request. Tab to the Delete or Cancel field and press the Enter key, or press the END PF key to cancel the request. (PF3 and PF15 are the defaults.)

- **Region dump:** If the region dump dataset has multiple address spaces, and if more than one of them is not in DELETED status, the command deletes all information from the Abend-AID for CICS files and changes the status of the entry to DELETED. If only one address space is in the dump dataset, or if you are deleting the last address space in the dump that does not have a status of DELETED, the command deletes all information from the Abend-AID for CICS files.

  If the entry is for a region dump, you can delete the SDUMP dataset, migrate it, or keep it on DASD. By default, Abend-AID for CICS displays a delete confirmation window from which to confirm or cancel the request. Abend-AID for CICS requests that you specify the disposition of the SDUMP dataset: delete, migrate, or keep.

  If the entry's Type field value is INFO, the command removes this *information-only* entry from the Abend-AID Directory.

You can disable the delete confirmation window for either a transaction or region dump by changing your user profile.

Note: If you specify in your user profile not to display the delete confirmation window, Abend-AID for CICS uses the SDUMP dataset disposition as specified on the User Profile screen. Refer to "User Profile Screen" on page 17-1 for additional information.

L Locks a *transaction* entry, protecting it from automatic deletion.

U Unlocks a locked *transaction* entry, freeing it for automatic deletion.

G Displays the Dump Analysis Message Log, which lists in chronological order the Abend-AID for CICS programs that were executed to analyze the dump. (Functions with region dumps only.) The Dump Analysis Message log displays any errors processing the dump, as well as any exception conditions found within the dump.

To display a selected entry's message log from any Abend-AID for CICS screen, enter **MLOG** as a fast-path command. For MLOG to function, however, you must first select a region entry from the Abend-AID Directory.

H Displays the Duplicate History Log for a *transaction* entry. The Duplicate History Log is a record of the duplicate dump suppression activity for the entry. For more information about the Duplicate History Log, refer to "Duplicate History Log" on page 4-9.

I Displays the Entry Information screen for any entry that is not an INFO (*information-only*) type. The Entry Information screen lists the entry's type, address space identifier (ASID), status, date and time processed, dataset name, title, symptom string, date and time imported, and system messages. For more information about this screen, refer to "Transaction Entry Information Screen" on page 4-7 and "Region Entry Information Screen" on page 4-8.

Another method for displaying the Entry Information screen for the current entry is to use the INFO command. From any Abend-AID for CICS screen, enter **INFO** as a fast-path command.

A Schedules dump analysis on the region entry. The current status of dump analysis is indicated in the entry's Status field.

R Recalls a *region* dump dataset that was migrated to archival storage via DFHSM or an equivalent product that uses the interface provided by the DFHSM ARCGIVER program. Once a dump is recalled, the status indicates SELECT, which means that only limited functionality is available. The dump must be analyzed again for full functionality. Use the **A** line command to analyze the dump again.

E Migrates a *region* dump dataset to archival storage via DFHSM or an equivalent product that uses the interface provided by the DFHSM ARCGIVER program, and deletes the dump analysis records from the dump information file.

P Prints the associated report for the selected entry to a temporary dataset. This dataset is printed in its entirety when you issue the GO primary command on the Print Options and Initiation screen or when you exit Abend-AID for CICS. For a transaction entry, this command prints a complete report, including storage captured by Abend-AID for CICS. For region dumps, it prints a summary report. Refer to "Print Options and Initiation Screen" on page 7-1 and "Printing Abend-AID for CICS-Supplied Reports" on page 7-5 for additional information.

T Terminates the dump analysis that Abend-AID for CICS is running or is scheduled to run on the region entry. For this line command to function, the entry must have a RUNNING, NEXT, SCHEDULED, or IMPORT status in its Status field.

C Changes the priority of the region entry to reschedule it as the next dump to have dump analysis. If dump analysis is already running against another dump, Abend-AID for CICS completes that processing before analyzing this entry.

N Displays the Contact Information screen for entries that match criteria specified in the action definitions created during installation customization. This screen lists basic identifying information about the dump and about the person and an alternate, back-up person that you can contact regarding the dump. For more information about this screen, refer to "Contact Information Screen" on page 4-12.

Transaction Entry Information Screen

The Transaction Entry Information screen, shown in Figure 4-3, provides the following information about a dump:

- Entry number and type
- Abend code or reason for the dump
- Transaction ID and task number
- Transaction report
- Date and time the entry was created and analyzed
- Number of users who have currently selected the entry
- User comments
- Abend-AID for CICS service level.

To display Entry Information from any Abend-AID for CICS screen, enter **INFO** as a fast-path command. The Entry Information screen is also available through the **I** (Information) line command on the Abend-AID Directory.

If a number other than zero displays in the Nbr User field, tab to the field and press Enter to display the Entry Users screen, which list of user IDs of those who have currently selected the entry, as shown in Figure 4-5 on page 4-9.

Figure 4-3. Transaction Entry Information Screen

```
 Abend-AID for CICS --------- Entry Information ----------------------------
COMMAND ===>



Entry Number....... 0000471   Entry Type. TRAN       Entry Date.... 10JUN2004
Code............... DSNC      Status..... COMPLETE   Entry Time.... 15:55:01
Job Name........... H01AC197  CICS APPLID H01AC197   Nbr Users..... 1

Transaction ID..... SQLS     Terminal... B063        User ID....... CICSUSER
CICS Rel........... 6.4.0    Program.... DSCV04ES    Netname....... TFHB063


Dataset Name....... CF.DEVL.DEFAULT.DB02
Symptom String..... SYMPTOMS= AB/UDSNC PIDS/566540301 FLDS/DFHPCLI
                    RIDS/DSCV04ES

Comments...........


AA/CICS Serv Level.  05.01.00-ABASE   -01/25/04@20.17
```

Notes:

1. The CICS release for CICS Transaction Server for z/OS Version 3 Release 1 is displayed as *6.4.0* on Abend-AID for CICS screens.
2. The AA/CICS Serv Level field doesn't display if you access the transaction Entry Information screen using the I (IInformation) line command from the Abend-AID Directory.

Region Entry Information Screen

The Region Entry Information screen, which is shown in Figure 4-4, provides the following information about a dump:

- Entry number and dump type
- Abend code or reason for the dump
- Address space identifier (ASID) of the region from which the dump was taken
- Original and current dump dataset names
- Date and time the dump was created, imported, and analyzed
- Number of users who have currently selected the entry
- User comments and system messages.

Figure 4-4. Region Entry Information Screen

```
 Abend-AID for CICS -------- Entry Information -------------------------------
COMMAND ===>

Entry Number.... 0000660   Dump Type.. SVC        Date Processed. 21MAY2004
Code............ S0C4      ASID....... 0149       Time Processed. 10:46:10
CICS Release.... 6.4.0     Home ASID.. 0149       Last Viewed by. TSOUSER
Job Name........ PFHBXT0S  Status..... MIGRATED   Nbr Users...... 001

Current Dump DSN.. SYS2.SAVEDUMP.DUMP00.G00924
Volume Serial..... MIGRAT
Original Dump DSN. SYS2.SAVEDUMP.DUMP00.G00924
Dump Title........ COMPUWARE SERVER DUMP: SERVER=SERVER1  CODE=S0C4
Symptom String.... S0C4

Dump Date......... 21MAY2003              Import Date......... 21MAY2003
Dump Time......... 10:40:57               Import Time......... 10:46:10
Addr Spaces in DS. 1                      Date Added to IPCS.. NEVER ADDED
CPU Serial Number. 120270                 Time Added to IPCS.. NEVER ADDED
Comment........... S0C4
System Messages... MFDFD1009E HSM migrated this dataset
```

Note: The CICS release for CICS Transaction Server for z/OS Version 3 Release 1 is displayed as *6.4.0* on Abend-AID for CICS screens.

To display Region Entry Information from any Abend-AID for CICS screen, enter **INFO** as a fast-path command. The Region Entry Information screen is also available through the I (Information) line command on the Abend-AID Directory.

If a number other than zero displays in the Nbr Users field, tab to the field and press Enter to display the Entry Users screen, which list of user IDs of those who have currently selected the entry, as shown in Figure 4-5 on page 4-9.

Entry Users Screen

The Entry Users screen displays the list of user IDs of those who have currently selected the transaction or region entry. Further, this screen identifies the entry number and whether it's a transaction or region entry.

Figure 4-5. Entry Users Screen

```
 Abend-AID for CICS ----------- Entry Users ------------- Row 000001 of 000001
COMMAND ===>                                                SCROLL ===> PAGE

Entry Number...... 00000776    Dump Type...... TRAN

User ID
********
TSOUSER
****************************** BOTTOM OF DATA *********************************
```

Duplicate History Log

The Duplicate History Log provides a record of duplicate *transaction* dump suppression activity. If duplicate suppression is enabled, for each dump, Abend-AID for CICS checks for an existing entry with the same transaction ID, abend code (and interrupt code for ASRA/ASRB abends), failing transaction and program name, and offset. You can also include an APPLID and job name as criteria by setting the appropriate transaction dump global options. If Abend-AID for CICS finds a match, and you have turned on dump suppression for the condition, Abend-AID for CICS suppresses the dump and updates the Duplicate History Log with an additional log entry. Each time a duplicate is suppressed, Abend-AID for CICS writes a message to the CSMT log. You can disable this functionality by using a transaction dump global option, as described in the *Abend-AID for CICS Installation and Customization Guide*.

Note: Abend-AID for CICS continues to suppress duplicates for a dump until you delete the original dump, or it is automatically deleted by Abend-AID for CICS if the transaction database is full, or the dump expires. Further, if you use the DUPABLIMT transaction dump global option, duplicate dumps are suppressed until the number of dumps being processed at one time falls below 50 percent of the value specified for the ABLIMIT transaction dump global option.

Duplicate dump suppression is turned off by default. You can turn on/off duplicate dump suppression using the Supp(ress) Dups field on the Permanent Tran Dump Profile screen or using the DUPDMPS and/or DUPABLIMT transaction dump global options. Refer to the *Abend-AID for CICS Installation and Customization Guide* for more information.

The Duplicate History Log tracks the frequency of a particular transaction failure without having to store redundant entry information. This savings is especially useful in a production environment where repetitive failures can fill a transaction database with unwanted duplicate information.

As shown in Figure 4-6, the Duplicate History Log describes the original abend first, followed by a scrollable list of log entries. The log displays these entries, which consist of date, time, terminal ID, job name, APPLID, system ID, and user ID information, in chronological order. The 100 most recent entries are saved in the log. If the number of duplicates exceeds 100, the oldest entries are rolled off to make room for new entries. When this occurs, a message is displayed indicating that more duplicates were suppressed than are currently displayed.

Figure 4-6. Duplicate History Log

```
 Abend-AID for CICS ------- Duplicate History Log -------- Row 000001 of 000004
COMMAND ===>                                                 SCROLL ===> PAGE

Original Dump Information for Dump 0000593:
Code.......... AEI0         APPLID.... H01AC148          SYSID... CW01
Job Name...... PFHAMJ41     Program... AMJE0032          Date.... 03JUN2004
Transaction... AJ32         Offset.... 000005A6          Time.... 10:44:40
Terminal...... B072         User Id... CICSUSER

Date       Time       Term   Job Name   APPLID     SYSID  User Id
********   ********   ****   ********   ********   *****  ********
03JUN2004  10:49:53   B072   PFHAMJ41   H01AC148    CW01  CICSUSER
03JUN2004  10:52:02   B072   PFHAMJ41   H01AC148    CW01  CICSUSER
03JUN2004  11:42:44   B072   PFHAMJ41   H01AC148    CW01  CFXSRE0
03JUN2004  11:46:54   B072   PFHAMJ41   H01AC148    CW01  CFXSRE0
****************************** BOTTOM OF DATA ******************************
```

To display the Duplicate History Log from any Abend-AID for CICS screen, enter **HISTORY** as a fast-path command. This method requires you to have selected a transaction entry from the Abend-AID Directory. You may also execute the **H** line command against any transaction entry in the directory to display the Duplicate History Log.

Note: When abends occur for transactions running under Language Environment, if you use the LESUPPORT transaction dump global option to discard subsequent dumps, Abend-AID for CICS does not maintain any history information and it does not increase duplicate abend counts. Refer to the *Abend-AID for CICS Installation and Customization Guide* for more information.

Duplicate Dump Expiration Interval

Figure 4-7 indicates that this dump is a duplicate of an expired dump. The DUPEXPIR parameter on the Transaction Dump Global Options screen is used to control how many days are to elapse until a dump expires. One day equals 24 hours, not a calendar day. Once a dump has expired, the next duplicate abend causes a single new dump to be taken. History information for subsequent duplicates is reported with this new dump. Refer to the *Abend-AID for CICS Installation and Customization Guide* for more information about the global parameter for setting up the duplicate dump expiration interval.

Note: Duplicate dumps are identified on the Abend-AID Directory with the Dups field. This field indicates the number of duplicate dumps that were suppressed. If a dump expires and a duplicate abend occurs, the dump is taken and the new entry displays **YES** in the Dups field if there are no subsequent duplicates of this dump. You can view the Duplicate History Log for this new entry that also includes information about the previously expired dump.

Figure 4-7. Duplicate History Log for an Expired Dump

```
 Abend-AID for CICS ------ Duplicate History Log ------- Row 000001 of 000002
COMMAND ===>                                                SCROLL ===> PAGE

Original Dump Information for Dump 0000644
Code.......... AEI0         APPLID.... H01AC148          SYSID... CW01
Job Name...... PFHAMJ41     Program... AMJE0032          Date.... 05JUN2004
Transaction... AJ32         Offset.... 000005A6          Time.... 17:09:30
Terminal...... B072         User Id... CICSUSER

This dump (644) is a duplicate of prior dump 593 taken on 03MAY2003 at
10:44:40.  Dump 644 was not suppressed as the expiration interval for dump 593
elapsed.  Suppressed duplicates for dump 644 follow:

Date        Time       Term   Job Name   APPLID     SYSID   User Id
*********   ********   ****   ********   ********   *****   ********
05JUN2004   17:09:46   B072   PFHAMJ41   H01AC148    CW01   CICSUSER
06JUN2004   11:47:55   B072   PFHAMJ41   H01AC148    CW01   CFXSRE0
****************************** BOTTOM OF DATA ********************************
```

Duplicate Dump Suppression and Region Dumps

Abend-AID for CICS does not provide a facility to suppress duplicate region dumps. Instead, Compuware recommends that you use either the CICS System Dump Table or the MVS Dump Analysis and Elimination (DAE) facility to suppress or eliminate duplicate CICS region dumps.

Contact Information Screen

If the selected entry matches all the criteria in an action definition created during Abend-AID for CICS installation customization, then the Contact Information screen, shown in Figure 4-8, provides the following information about the dump:

- Job name
- Abending transaction ID
- Application ID
- Abend code
- Program name
- MVS system ID
- Abend date and time
- Information about the person to contact regarding the dump, such as name, phone number, e-mail address, title, department, and location.
- Same types of information about a secondary, alternate person.

Figure 4-8. Contact Information Screen

```
 Abend-AID for CICS ------- Contact Information -----------------------------
COMMAND ===>

Jobname....... PFHAMJ12    Abend Code... ASRA        Abend Date.... 11JUN2004
Transaction... AADM        Program...... CCAADEMO    Abend Time.... 13:52:03
APPLID........ H01AC197    MVS SYSID.... CW01

Contact Name............ Jack Johnson
Phone Number............ 203-555-1234
Email Address........... jack_johnson@abc_corp.com
Title................... Systems Analyst
Department.............. Technical Support
Location................ New York City Headquarters
Back-up Name............ Susan Miller
Back-up Phone Number.... 203-555-6789
Back-up Email Address... susan_miller@abc_corp.com
Special Instructions.... Contact Jack or Susan before restarting this trans-
                         action.
                         ____________________________________________________
                         ____________________________________________________
                         ____________________________________________________
```

To display the Contact Information screen, enter the **N** line command next to the associated entry on the Abend-AID Directory.

Chapter 5.
Accessing Storage Information

This chapter describes the methods for accessing storage information. Topics presented in this chapter include the following:

- Displaying storage
- Displaying control block information
- Displaying SUMDUMP summary data
- Locating data in storage
- Tracking storage navigation
- Running control block chains.

Displaying Storage

To display storage, you can do the following:

- Execute the CORE command from any Abend-AID for CICS screen.
- Execute the HEXD command on any field listing a table entry, a symbol, or a control block address.
- Specify a storage location in the Display Memory at Address field on the Control Blocks/Storage screen.
- Select a table or control block from the ones listed on the Control Blocks/Storage screen.

These methods are described in this section.

CORE and HEXD Commands

With the CORE command, you can display storage from any Abend-AID for CICS screen. Simply enter **CORE**, a period, and an address, symbol name, or table entry as a fast-path command. Entering **CORE.00012B90**, for example, displays the storage located at hexadecimal address 00012B90. For more information about this command, including specifics about its syntax, refer to "CORE" on page 18-8.

The HEXD command, in comparison, displays storage directly from any data field listing a control block address, a symbol, or a table entry.

To display the storage associated with a specific field, perform one of the following procedures:

- Type **HEXD** in the COMMAND field, position the cursor on the field, and press the Enter key.
- Position the cursor on the field and press the HEXD PF key. (PF18 is the default.)

Note: Use the DSECT command or the DSECT PF key to display storage in DSECT format. (PF19 is the default.) For specifics, refer to "DSECT" on page 18-11.

Abend-AID for CICS displays the requested storage on the Memory Display screen. For information about this screen, refer to "Memory Display" on page 5-3.

Control Blocks and Storage

The Control Blocks/Storage screen, which is a selection on the Primary Options menu, gives you direct access to the storage you want to display. As Figure 5-1 shows, this screen also gives you access to the paperclip table and the paperclip list. For information about the paperclip facility, refer to "Tracking Storage Navigation" on page 5-6.

Figure 5-1. Control Blocks/Storage for Region Dumps

```
 Abend-AID for CICS ------ Control Blocks/Storage ------ Row 000001 of 000041
COMMAND ===>                                                SCROLL ===> PAGE

MEM     Display Memory at Address ===>

PCLP    Current Paperclip Table        SACLIP  Saved Paperclip Table

Name      Description                  Name      Description
AFCS      Auth Function Common Stg     AID*      Auto Init Descriptor
APANCH    AP Domain Anchor             APDOM     AP Domain Header
ASCB      Addr Space Control Block     ASXB      Addr Space Extension Block
CCANCH    CC Domain Anchor             CCDOM     CC Domain Header
CSA       Common System Area           CSAOPFL   Optional Features List
CVT       Communications Vector Tbl    DEANCH    DE Domain Anchor
DEDOM     DE Domain Header             DMANCH    DM Domain Anchor
DMDOM     DM Domain Header             DSANCH    DS Domain Anchor
DSDOM     DS Domain Header             DTA*      Dispatcher Task Area
DUANCH    DU Domain Anchor             DUDOM     DU Domain Header
FCT*      File Control Table           GCANCH    GC Domain Anchor
GCDOM     GC Domain Header             ICE*      Interval Control Element
JCT*      Journal Control Table        JSCB      Job Step Control Block
KEANCH    KE Domain Anchor             KEDOH     KE Domain Table
KEDOM     KE Domain Header             KEER*     KE Domain Error Table
An asterisk (*) indicates multiple entries for the Control Block listed.
```

Note: The Control Blocks/Storage screen for transaction entries is displayed in a slightly different format than shown in the example above. The way in which both screens function, however, is the same.

To display the Control Blocks/Storage screen from any Abend-AID for CICS screen, enter **CB** as a fast-path command. To display specific storage areas from this menu, perform the following steps:

1. In the Display Memory at Address field, type the table entry, symbol, or control block address whose storage you want to display:
   - For region dumps only, precede the table entry name with the table type, for example, **PCTE CEMT**. (PCTE is the table type, and CEMT is the table entry name.)
   - For region dumps only, precede the symbol name with **S/**, for example, **S/TCA0008**.
   - Type the address in hexadecimal format, for example, **0045FD34**
2. Press Enter to display the Memory Display screen for the storage specified.

The Control Blocks/Storage screen also lists all applicable CICS control blocks and tables. To display dump information in interpreted, DSECT, or hexadecimal format, tab the cursor to the desired table or control block name, for example, AFCT or PCT. Then press Enter or the applicable PF key. (The initial defaults are PF18 for the HEXD command and PF19 for the DSECT command.)

For single occurrence control blocks, such as the CSA or the domain anchor blocks, Abend-AID for CICS displays the associated storage or DSECT. For tables and chains, Abend-AID for CICS displays a list of individual entries in the table or chain. Using the Enter, HEXD, or DSECT PF key to select an entry from the list displays the appropriate display for that entry.

Memory Display

The Memory Display screen, shown in Figure 5-2, displays storage in hexadecimal format. To display this screen for a table entry, a symbol, or a control block address, use the CORE or HEXD commands as described in "Displaying Storage" on page 5-1. You can also access this screen from the Control Blocks/Storage screen.

Figure 5-2. Memory Display for Transaction Entries

```
 Abend-AID for CICS ----------- Memory Display -------------------------------
COMMAND ===>                                                   SCROLL ===> PAGE

                                                          Clip Prev Next Lock
   Start Addr: 00000000 Comment:

 Address    Offset    Word 1   Word 2   Word 3   Word 4    Storage
 00000000 +00000000  040C0000 811384A0 00000000 00000000  *....a.d...... ...*
 00000010 +00000010  00FD05A0 00000000 070E0000 00000000  *............ ...*
 00000020 +00000020  070C0000 00C1BD0A 070C5000 8258736A  *.....A....&.b ..|*
 00000030 +00000030  00000000 00000000 070E0000 00000000  *............ ...*
 00000040 +00000040  00000000 00000000 00000000 00FD05A0  *............ ...*
 00000050 +00000050  00000000 00000000 040C0000 81090E28  *...........a ...*
 00000060 +00000060  040C0000 80FF2100 00080000 839B1398  *...."......c ..q*
 00000070 +00000070  00080000 839B2200 040C0000 81091780  *....c.......a ..."*
 00000080 +00000080  00000000 00001004 00020001 00020011  *............ ...*
 00000090 +00000090  00043001 00000000 00000000 00000000  *............ ...*
 000000A0 +000000A0  0A000000 0121B688 00000000 00000000  *.......h..... ...*
 000000B0 +000000B0  00000000 00000000 00010178 00F41F90  *............ 4..*
 000000C0 +000000C0  00000000 00000000 00000000 00000000  *............ ...*
 000000D0 +000000D0  00000000 00000000 00000000 00000000  *............ ...*
 000000E0 +000000E0  00000000 00000000 00000000 00000000  *............ ...*
 000000F0 +000000F0  00000000 00000000 00000000 00000000  *............ ...*
 00000100 +00000100  00000000 00000000 00000000 00000000  *............ ...*
```

Note: With Release 4.3, the Memory Display has been enhanced for region dumps. Refer to "Enhanced Memory Display" on page 16-21 for more information and examples.

Primary Commands

The following commands have applications for the Memory Display:

CHAIN	DECODE	MAPD	SAVE	WHO
CLIP	DISASM	MATCH	SMAP	
CLR	FIND	MODE	UNSTCK	
COMM	HEXD	RESTORE	WHERE	

SMAP (storage map) is a fast-path command that displays the Storage Map Display screen, which lists all allocated and unallocated storage segments for the current dump. To access a specific address from any Abend-AID for CICS screen, use the CORE or HEXD command.

For information about CORE and the remaining commands, refer to Chapter 18, "Primary Commands". In addition, "Locating Data in Storage" on page 5-4 and "Running Control Block Chains" on page 5-8 provide detailed information about the FIND and CHAIN commands, respectively.

Scrollable Information

UP (PF7) and DOWN (PF8) commands scroll information on the Memory Display, but LEFT (PF10) and RIGHT (PF11) commands are not applicable. The output lines that you can scroll consist of the following fields:

Address	Address of the 16 bytes displayed on the line. **Note:** Wider terminals such as IBM's 3278 Model 5 display 32 bytes on the line.
Word1	Bytes 0 – 3 of the 16 (or 32) bytes.
Word2	Bytes 4 – 7 of the 16 (or 32) bytes.
Word3	Bytes 8 – 11 of the 16 (or 32) bytes.
Word4	Bytes 12 – 15 of the 16 (or 32) bytes.
Word5	Bytes 16 – 19 of the 32 bytes. Applies to Model 5 and similar terminals only.
Word6	Bytes 20 – 23 of the 32 bytes. Applies to Model 5 and similar terminals only.
Word7	Bytes 24 – 27 of the 32 bytes. Applies to Model 5 and similar terminals only.
Word8	Bytes 28 – 31 of the 32 bytes. Applies to Model 5 and similar terminals only.
Interpreted	Character representation of the data contained in the 16 (or 32) bytes displayed on the line. Nondisplay characters are represented by a period (.).

Displaying SUMDUMP Summary Data

CICS region dumps always contain SVC dump summary data (SUMDUMP records), which you can view with Abend-AID for CICS. Your site's installer can use a viewing server configuration parameter to specify whether to merge SDUMP SUMDUMP records into region dumps when you view them through Abend-AID for CICS. The default is **YES**. Refer to the *Abend-AID for CICS Installation and Customization Guide* for additional information.

Locating Data in Storage

To locate hexadecimal or character data in the Memory Display, use the FIND command.

Issuing a FIND Command

To issue a FIND command, enter **FIND** (or **F**) and a search string as a primary command. You also have the option to include a search direction parameter (FIRST, LAST, NEXT, or PREV). For example:

FIND c'DFH' – Finds the character string *DFH*.

F x'D010' PREV – Finds the previous occurrence of the hexadecimal string D010.

Note: Enclosing the hexadecimal string with **x' '** is required only on the Memory Display. On all other screens, you can locate hexadecimal data by just entering the hexadecimal string.

F t'program=TCP' LAST – Finds the last occurrence of the mixed-case character string program=TCP.

For specifics about FIND command syntax, refer to "FIND" on page 18-12.

Setting FIND Command Parameters

All standard IPCS FIND command parameters are supported on the Memory Display. To set and maintain these parameters, enter **FIND** or **F** as a primary command. Abend-AID for CICS displays the Find for Storage Display screen shown in Figure 5-3.

Figure 5-3. Find for Storage Display

```
 Abend-AID for CICS ------ Find for Storage Display ------------------------
COMMAND ===>

Start Search at... 00000000

Operator.......... EQ

Search Argument...

Address........... 0:7FFFFFFF

Boundary.......... BDY(1)

Break............. NOBREAK

Direction......... NEXT
```

Once you set the defaults for the FIND command, Abend-AID for CICS maintains them between sessions as part of your user profile. To change your defaults or issue a FIND command from the Find for Storage Display screen, type over the displayed values and press Enter.

Note: Abend-AID for CICS automatically updates the defaults in the Search Argument and Direction fields with the last FIND command parameter defaults you typed in the COMMAND field.

Navigating by Offset

To scroll the Memory Display forward or backward to a specified offset from the Start Addr address, enter **+offset** or **-offset** in the COMMAND field. To reposition the display to offset zero, enter the **RESET** primary command. Refer to "+offset" on page 18-23, "-offset" on page 18-22, and "RESET" on page 18-25 for additional information.

Enter **@offset** to position the Memory Display at the address at the specified offset. The address must be in allocated storage. Refer to "@offset" on page 18-22 for additional information.

Tracking Storage Navigation

The paperclip facility keeps track of your navigation through the Memory Display. The two screens comprising this facility are the Current Paperclip Table and the Saved Paperclip List.

Current Paperclip Table

Abend-AID for CICS maintains a paperclip table for each user accessing a dump. This table, which is shown in Figure 5-4, is a wraparound table displaying the 389 most recently accessed storage locations in the Memory Display. When the limit of 389 paperclip entries is exceeded, the table overlays the oldest entry with the newest. (Entries are listed in chronological order from oldest to newest.) To prevent an entry from being overlaid, use the **L** (Lock) line command. You can also use the LOCK keyword parameter of the CLIP command on the Memory Display to lock the current paperclip entry.

Figure 5-4. Current Paperclip Table

```
 Abend-AID for CICS ----- Current Paperclip Table ------ Row 000001 of 000007
COMMAND ===>                                                SCROLL ===> PAGE

  S Select Entry     D Delete Entry     L Lock Entry     U Unlock Entry

  Address   Status    Comment (Overtype to update)
  ********  ********  ************************************
_ 01E9E2C0
_ 01E99AC0
_ 01E8F0E0
_ 01E7B5F8
_ 01E7B0F8
_ 01E7B008
_ 00000000
  ****************************** BOTTOM OF DATA ******************************



Type a line command and press Enter to process it
```

Abend-AID for CICS adds an entry to the bottom of the paperclip table each time the displacement shown on the Memory Display equals zero. You may also add an entry to the paperclip table by placing the cursor on any address in the Memory Display and pressing Enter.

To display the paperclip table from any Abend-AID for CICS screen, enter **PCLP** as a fast-path command. You can also display it directly from the Control Block/Storage screen, which is a selection on the Primary Options menu. For information about this screen, refer to "Control Blocks and Storage" on page 5-2.

Line Commands

The following line commands are valid on the Current Paperclip Table screen:

S Displays the Memory Display screen, positioned at the address of the selected paperclip entry.

D Deletes the paperclip entry.

L Prevents the system from automatically deleting the paperclip entry when the display limit of 389 paperclip entries is exceeded.

U Frees the paperclip entry for deletion when the display limit of 389 paperclip entries is exceeded.

Saved Paperclip List

The Saved Paperclip List, shown in Figure 5-5, displays the paperclip tables that *all* users have saved for the current dump. Abend-AID for CICS maintains one saved paperclip list per dump.

Figure 5-5. Saved Paperclip List

```
 Abend-AID for CICS -------- Saved Paperclip List -------- Row 000001 of 000003
COMMAND ===>                                                SCROLL ===> PAGE


  R Restore Paperclip Table        D Delete Paperclip Table

  Name      Status   Date and  Time Saved
  *******   ******** ********* **********
_ TSOUSER            03FEB2004 17:15:17
_ CFUSER2            07FEB2004 10:20:03
_ AACICS5            08FEB2004 12:20:48
_ AACICS8            08FEB2004 11:22:27
  ***************************** BOTTOM OF DATA ******************************









Type a line command and press Enter to process it
```

Displaying the Saved Paperclip List

To display the Saved Paperclip List from any Abend-AID for CICS screen, enter **SACLIP** as a fast-path command. You can also display this screen directly from the Control Blocks/Storage screen, which is a selection on the Primary Options menu. For information about this screen, refer to "Control Blocks and Storage" on page 5-2."

Adding the Current Paperclip Table to the Saved Paperclip List

To add the current paperclip table to the saved paperclip list, enter **SAVE** and a one-to-eight character name in the COMMAND field. For example, typing **SAVE TABLE1** saves the current paperclip table under the name *TABLE1*.

Note: If you exit Abend-AID for CICS without saving the current paperclip table, Abend-AID for CICS saves the table automatically, assigning it a name corresponding to your user ID.

Restoring a Saved Paperclip Table

You can restore any saved paperclip table as the current paperclip table, even those created by other users. Enter **REST** and the table name in the COMMAND field. For example, typing **REST TABLE2** restores the paperclip table named *TABLE2*.

Note: The saved paperclip table is not automatically restored the next time you access the dump.

Resaving the Current Paperclip Table

To resave the current paperclip table under its existing name, enter **SAVE** in the COMMAND field. If the current paperclip table has no preexisting name, the SAVE command uses your user ID.

Line Commands

The following line commands are valid on the Saved Paperclip List:

R Restores the saved paperclip table as your current paperclip table.

D Deletes the saved paperclip table.

Running Control Block Chains

The CHAIN command enables you to run control block chains based on parameters specified on the CHAIN Command Parameters screen (Figure 5-6). To display this screen from any Abend-AID for CICS screen, enter **CHAIN** as a fast-path command.

Figure 5-6. CHAIN Command Parameters Screen

```
 Abend-AID for CICS -------- Chain Command Parameters ----------------------
COMMAND ===>

    Chain Prefix Name.......... TQE

    Run Chain From Address..... 00000000

    Addressing Mode............ 31       (24/31)

    Number of Entries to Run... 0099

    Link Address Offset........ 0000

    Chain Termination Value....
```

When you press the Enter key from the CHAIN Command Parameters screen, Abend-AID for CICS runs the control block chain based on the current parameters, displays the Memory Display screen, and positions the cursor on the first occurrence of a control block in the chain. Entries are created in the current paperclip table for the other occurrences of the control block in the chain. To move forward through the entries in the paperclip table, enter **CLIP NEXT** in the COMMAND field. To move backward, enter **CLIP PREV** in the COMMAND field or position the cursor on the Prev or Next fields on the memory display.

Note: The Current Paperclip Table screen lists a maximum of 389 entries. If the CHAIN command generates more than 389 entries, the table wraps.

Abend-AID for CICS bypasses the CHAIN Command Parameters screen if you type the CHAIN command with address and offset parameters. For information about these parameters, refer to "CHAIN" on page 18-5.

Chapter 6. Displaying DSECTs

This chapter describes how to display CICS control blocks in DSECT format. It also lists the DSECT images that Abend-AID for CICS supplies for the following CICS versions:

- CICS Transaction Server for z/OS 3.1, 2.3, and 2.2
- CICS Transaction Server for OS/390 1.3

You can also define your own user DSECTs to Abend-AID for CICS. For example, you can define DSECTs for in-house or third-party vendor packages and then use Abend-AID for CICS to map storage into the DSECT maps you supply. You can also define non-CICS system DSECTs to Abend-AID for CICS (for example, the MVS TCB).

Refer to the *Abend-AID for CICS Installation and Customization Guide* for information about creating user-defined DSECTs.

Note: You must use the MAPD command with the USER keyword to display user-defined DSECTs. For information about this command, refer to "MAPD" on page 18-18.

Displaying Control Blocks in DSECT Format

The DSECT Support screen, shown in Figure 6-1, displays CICS control blocks in DSECT format. The screen includes address, offset, label, data type, data, and comment information. For equate statements, the OFFSET field lists the equated value.

Figure 6-1. DSECT Support Screen

```
 Abend-AID for CICS ----------- DSECT Support ----------- Row 000001 of 000057
COMMAND ===>                                                SCROLL ===>PAGE

To display the DSECT without equates select EXCLUDE                     ==>

DSECT Name.... CPE                       CICS Release..... C640

Address  Offset Label    Type      Data     DSECT    Comment
  LICENSED MATERIALS, (C) COPYRIGHT IBM CORPORATION 1987, 1994.
00000000 0000   CPE      DSECT
00000000 0000   CPE__DUM 0CL172
00000000 0000   CPE_PREF 0CL24                      Standard prefix
00000000 0000   CPE_LENG FL2       040C             Control block length
00000002 0002   CPE_ARRO CL1                        Control block eyecatcher
00000003 0003   CPE_DFH  CL3       008118
00000006 0006   CPE_EYE_ 0CL10
00000006 0006   CPE_DOMA CL2       8B78
00000008 0008   CPE_BLOC CL8
00000010 0010   CPE_NEXT AL4       00FD2DC8         -> next CPE in chain
00000014 0014   CPE_PRIO AL4       00000000         -> previous CPE in chain
00000018 0018   CPE_PROG FL1       07               Status of the program
00000019 0019   CPE_LOCK FL1       0C               CPE lock field
0000001A 001A   CPE_RECO 0FL1
    00000080    CPE_BUIL EQU       X'80'            CPE built during
```

Displaying the DSECT Support Screen

The DSECT Support screen is available from most Abend-AID for CICS screens that list a symbol, a table entry, a control block address, or an actual control block entry. (A DSECT

display is not available for all control blocks.) To display the screen, use one of the following methods:

- Place the cursor on a control block field and press the DSECT PF key. (PF19 is the default.)
- Type **DSECT** in the COMMAND field, place the cursor on a control block field, and press the Enter key.
- Use the MAPD command to map storage displays into DSECT format. For specifics about this command, refer to "MAPD" on page 18-18.

Accessing Data on the DSECT Support Screens

Scrolling to the right on the DSECT Support screen displays the DSECT Label Expansion screen, which replaces the truncated LABEL field with an expanded LABEL field and deletes the COMMENT field. The expanded LABEL field lists the complete field names of the DSECT statements. Scrolling back to the left redisplays the original DSECT Support screen with the truncated LABEL and the COMMENT fields.

The following commands function on the scrollable portion of the DSECT Support and DSECT Label Expansion screens: UP, DOWN, LEFT, RIGHT, TOP, BOTTOM. For specifics about the TOP and BOTTOM commands, refer to Chapter 18, "Primary Commands". For information about the remaining commands, refer to "Default PF Key Definitions" on page 17-5.

To view the contents of an address field in hexadecimal, use one of these methods:

- Place the cursor on the address field and then press the HEXD PF key. (PF18 is the default.)
- Type **HEXD** in the COMMAND field, place the cursor on the address field, and then press the Enter key.

For fields that are defined as an address type (A) or fullword (F), position the cursor on the actual field contents and press the HEXD PF key to display the data at that address.

For Abend-AID for CICS-supplied, system DSECTs, not user-defined DSECTS, you can automatically map the associated control block for an address of a control block for which there is an available DSECT map. By default these addresses are highlighted in yellow for easy identification. Position the cursor on the highlighted address in the scrollable area and press the DSECT PF key. (PF19 is the default).

Suppressing DSECT Equate Statements

By default, the DSECT Support screen displays all fields in the requested DSECT, including equate statements. To suppress the equate statements, tab to the EXCLUDE field and press Enter. The screen is redisplayed without equates. To refresh the screen to include the equates, tab to the INCLUDE field and press Enter.

Supplied Abend-AID for CICS DSECTs

This section lists the DSECT images that Abend-AID for CICS supplies. For the list of CICS Transaction Server and CICS/ESA DSECTs, refer to Table 6-1. The following information is provided in the table:

Actual DSECT name The name displayed in the fixed portion of the DSECT Support screen.

DSECT type The name to use with the MAPD command.

Description The use of the DSECT.

Note: The System DSECT Table lists the DSECTs available for the currently selected dump. To display this screen, enter **MAPD** as a fast-path command. For more information about the MAPD command, refer to "MAPD" on page 18-18.

DSECTs for CICS Transaction Server

Table 6-1 lists the DSECTs that Abend-AID for CICS supplies for CICS Transaction Server for z/OS versions 3.1, 2.3, 2.2, and CICS Transaction Server for OS/390 versions 1.3.

Notes:

1. Some DSECTs do not support all versions of CICS Transaction Server for z/OS and CICS Transaction Server for OS/390. The Description column for these DSECTs specifies which versions are supported.
2. CICS Transaction Server for z/OS and CICS Transaction Server for OS/390 are abbreviated to *CTS* in the table.

Table 6-1. Supplied CICS Transaction Server DSECTs

Actual DSECT Name	DSECT Type	Description
ACA	TSAUX	Temporary Storage Auxiliary Class Anchor
ANCHOR	DMANCH	Domain Manager Anchor
ANCHOR	DSANCH	Dispatcher Domain Anchor Block
ANCHOR	LMANCH	Lock Manager Anchor Block
ANCHOR	MEANCH	Message Domain Anchor Block
ANCHOR	STANCH	Statistics Domain Anchor Block
APE	APE	Loader Domain Active Program Element
BCA	BCA	Temporary Storage Buffer Control Area
BFB	BFB	Bridge Facility Block
BMH	TSBM	Temporary Storage Auxiliary Storage Byte Map
BRB	TSBRB	Temporary Storage Browse Block
BRXA_COMMAND_COMMON	BRCOMMA	Bridge Exit Command Area
BRPC	BRPC	Bridge Primary Client
BRSA	BRSA	Bridge State Area
BRTA	BRTA	Bridge Task Area
BRXA_HEADER	BRXA	Bridge Exit Header
BRXA_TRANSACTION_AREA	BRXTRANA	Bridge Exit Transaction Area

Table 6-1. Supplied CICS Transaction Server DSECTs

Actual DSECT Name	DSECT Type	Description
CCANCHORB	CCANCH	Catalog Domain Anchor Block
CHANGE_LIST_ELEMENT	CLE	Table Manager Change List Entry
CPE	CPE	Loader Domain Current Program Element
CSAOPFL	OPFL	Common System Area Optional Features List
DCR	DCR	Document Control Record
DCTSDSCI	SDSCI	DCT Dataset Control Information
DDA	DDANCH	Directory Manager Anchor Block
DFHAFCTE	AFCTE	Application File Control Table Entry
DFHAIDDS	AID	Automatic Initiate Descriptor
DFHAPDM_STATIC	APSTATIC	Application Domain Static Storage
DFHBRBSB	BSB	Bridge Facility Start Block
DFHCSADS	CSA	Common System Area
DFHDCTDS	DCTE	Destination Control Table Entry
DFHDGB	DGB	DBCTL Global Storage
DFHDLPDS	DLP	DL/I Parameter List
DFHDSB	DSB	DBCTL Scheduling Block
DFHDSNDS	DSNDS	Dataset Name Block
DFHEIBLK	EIB	Execute Interface Block
DFHEISDS	DFHEISDS	Execute Interface Structure
DFHEISTG	EIS	Execute Interface Storage
DFHEJAED	EJAE	Enterprise Java Elements *(CTS 2.2 and more current only)*
DFHEJANC	EJANCH	Enterprise Java Anchor Block *(CTS 2.2 and more current only)*
DFHEJAND	EJANCH	Enterprise Java Domain Anchor Block *(CTS 2.2 and more current only)*
DFHEJAOD	OSANCH	Enterprise Java Object Store Anchor Block *(CTS 2.2 and more current only)*
DFHEJBBD	EJBB	Bean Browsers *(CTS 2.2 and more current only)*
DFHEJBID	EJBI	Bean Elements *(CTS 2.2 and more current only)*
DFHEJCBD	EJCB	CorbaServer Browsers *(CTS 2.2 and more current only)*
DFHEJCID	EJCI	CorbaServer Elements *(CTS 2.2 and more current only)*
DFHEJDBD	EJDB	DJar Browsers *(CTS 2.2 and more current only)*
DFHEJDID	EJDI	DJar Elements *(CTS 2.2 and more current only)*
DFHFCTDS	FCTE	File Control Table Entry
DFHFCTSR	LSRPOOL	Local Shared Resources Control Block
DFHFIOA	FIOA	File I/O Area
DFHFLAB	FLAB	File Lasting Access Block
DFHFRAB	FRAB	File Request Anchor Block
DFHFRTE	FRTE	File Request Thread Element

Table 6-1. Supplied CICS Transaction Server DSECTs

Actual DSECT Name	DSECT Type	Description
DFHICEDS	ICE	Interval Control Element
DFHICP_STATIC	ICSTATIC	Interval Control Static Storage Area
DFHIIDCD	IIA	IIOP Domain Anchor Block *(CTS 2.2 and more current only)*
DFHIIMDD	MDA	RequestModel Class Anchor Block *(CTS 2.2 and more current only)*
DFHKCB	KEANCH	Kernel Domain Anchor Block
DFHLLE	LLE	Load List Entry
DFHOTDMD	OTDM	Object Transaction Block *(CTS 2.2 and more current only)*
DFHPAA	PAANCH	Parameter Domain Anchor Block
DFHPCTDS	PCTE	Program Control Table Entry
DFHPCTIL	PCTL	Program Control Table Address List
DFHPPTDS	PPTE	Processing Program Table Entry
DFHRZDMD	RZDM	RequestStream Domain Management Block *(CTS 2.2 and more current only)*
DFHSITDS	SIT	System Initialization Table
DFHSJDCD	SJANCH	JVM Domain Anchor Block *(CTS 2.2 and more current only)*
DFHSJJ8D	J8TCB	J8 TCB Block *(CTS 2.2 and more current only)*
DFHSRTDS	SRT	System Recovery Table
DFHSSADS	SSA	Static Storage Area
DFHTCADS	UTCA	User Task Control Area
DFHTCADY	STCA	System Task Control Area
DFHTCTFX	TCTFX	Terminal Control Table Prefix
DFHTCTSK	TCTN	Terminal Control Table Skeleton Entry
DFHTCTTE	TCTE	Terminal Control Table Entry
DFHTDST	TDST	Transient Data Static Storage
DFHTIA	TIANCH	Timer Domain Anchor Block
DFHTIEDS	TIE	Task Interface Element
DFHTIOA	TIOA	Terminal Input/Output Area Prefix
DFHTMDEL	ELEM	Table Manager Directory Entry
DFHTMSKT	SKT	Table Manager Scatter Table
DFHTMSSA	TMSTAT	Table Manager Static Storage Area
DFHTRA	TRANCH	Trace Domain Anchor Block
DFHTRBL	DFHTRBL	Trace Domain Trace Block Header
DFHTSBM	TSBM	Temporary Storage Byte Map
DFHTSTDS	TSTDS	Temporary Storage Table
DFHUETH	UETH	User Exit Table Header
DFHVSWA	VSWA	VSAM Work Area
DFHXSSS	XSSS	Security Domain Supervisor Storage

Table 6-1. Supplied CICS Transaction Server DSECTs

Actual DSECT Name	DSECT Type	Description
DHA	DHANCH	Document Handler Anchor
DIRHEAD	DIRHEAD	Directory Header
DOA	DOA	Document Handler Document Anchor
DOMAIN_ENTRY	DOMTBL	Kernel Domain "Domain Table" Entry
DOMAIN_HEADER	KEDOH	Kernel Domain Header
DPA	DPANCH	Debugging Profile Domain Anchor *(CTS 2.3 and more current only)*
DS_TCB	DSTCB	DS Domain TCB Block, per mode
DTA	DTA	Dispatcher Task Area
DUA	DUANCH	Dump Domain Anchor Block
GLOBAL	LDANCH	Loader Domain Anchor Block
HASHELEM	HASHELEM	Directory Manager Hash Table Element
HASHSTRUCT	HASHTBL	Directory Manager Hash Table
HTB	HTB	Handle Table Block
HTE	HTE	Handle Table Element
IIA	IIANCH	IIOP Domain Anchor Block *(CTS 2.2 and more current only)*
KCSTATIC	KCSTATIC	Task Control Static Storage
KERNSTCK	STACK	Kernel Stack Entry
KTCB_ENTRY	KTCB	Kernel TCB
LGA	LGA	Log Manager Anchor Block
LGBR_BROWSE_DATA	LGBR	Log Manager Browse Data
LGGD_GLOG_DATA	LGGD	Log Manager General Log Data
LGJI_JOURNAL_INFO	LGJI	Log Manager Journal Information
LGJMC_ JOURNALMODEL	LGJMC	Log Manager Journal Model Content
LGSD_STREAM_DATA	LGSD	Log Manager Log Stream Data
LOCALWA	LOCALWA	DBCTL Local Work Area
LOCK_MANAGEMENT	LOCKMGRB	Lock Manager Management Block
LTE	LTE	Sockets Domain Listener Table
MAFPB	MAFPB	Monitor Domain Auth Facility Parameter Block
MET_MODULE_HEADER	MEMODHDR	Message Domain Module Header
MNA	MNA	Monitoring Domain Anchor Block
NQA	NQA	Enqueue Manager Anchor Block
NQEA	NQEA	Enqueue Queue Element Area
NQPL	NQPL	Enqueue Manager Enqueue Pool
OTDM	OTANCH	Object Transaction Anchor Block *(CTS 2.2 and more current only)*
PAPL	PAPL	DBCTL Architected Parameter List
PARM_SAVE_AREA	PASAVE	Parameter Domain Override Save Area

Table 6-1. Supplied CICS Transaction Server DSECTs

Actual DSECT Name	DSECT Type	Description
PCA	TSPCA	Temporary Storage Pool Control Area
PCSTATIC	PCSTATIC	Program Control Static Storage
PGANCHOR	PGANCH	Program Manager Anchor Block
PIA	PIANCH	Pipeline Domain Anchor *(CTS 3.1 and more current only)*
PLCB	PLCB	Program Level Control Block
PPA	PPA	Storage Domain Page Pool Area
PTA	PTA	Program Transaction Area
PT_ANCHOR_BLOCK	PTANCH	Partner Domain Anchor Block *(CTS 3.1 and more current only)*
QUICKCELL_1_ELEMENT	QCCELL1	Lock Manager Quick Cell Block Descriptor
QUICKCELL_2_ELEMENT	QCCELL2	Lock Manager Quick Cell Block Descriptor
QUICKCELL_3_ELEMENT	QCCELL3	Lock Manager Quick Cell Block Descriptor
QUIESCE_ENQUEUE_LIST	QEQ	Table Manager Enqueue List Entry
RCSTATIC	RCSTATIC	Recovery Control Static Storage
RMDM	RMDM	Recovery Manager Domain Anchor Block
RMUW	RMUW	Recovery Manager Unit of Work
RXDM	RXANCH	Recoverable Resource Manager
RZDM	RZANCH	Request Stream Manager Anchor Block *(CTS 2.2 and more current only)*
SCA	SCA	Subpool Control Area
SHA	TSSHARED	Temporary Storage Shared Storage Class Anchor
SJA	SJANCH	JVM Domain Anchor Block *(CTS 2.2 and more current only)*
SMA	SMA	Storage Domain Anchor Block
SMX	SMX	Storage Manager Transaction Block
SOA	SOA	Sockets Domain Anchor Block
STE	STE	Sockets Domain Session Entry
STE	TSSTE	Temporary Storage Shared Storage Table Entry
STRING_BUFFER	CCBUFFER	Catalog Domain String Buffer
SUB_DISPATCHER	SUBDISP	Dispatcher Domain Sub-Dispatcher, per mode
TASK_ENTRY	TAS	Kernel Task Entry
TBR	TBR	TCPIP Service Browse Block
TCTENIB	NIB	Node Initialization Block Descriptor
TDA	TDA	TCPIP Service Class Anchor
TDB	TDB	TCPIP Service Class Object
TIMER_REQUEST_ELEMENT	TRE	Timer Domain Request Element
TMA	TMA	Transaction Monitoring Area
TSA	TSANCH	Temporary Storage Domain Anchor

Table 6-1. Supplied CICS Transaction Server DSECTs

Actual DSECT Name	DSECT Type	Description
TSM_CLASS_ANCHOR	TSMAIN	Temporary Storage Main Storage Class Anchor
TSN_CLASS_ANCHOR	TSNAME	Temporary Storage Name Class Anchor
TSQ_CLASS_ANCHOR	TSNAME	Temporary Storage Queue Class Anchor
TSQUEUE	TSQUEUE	Temporary Storage Queue Control Block
TSR_CLASS_ANCHOR	TSRLOCK	Temporary Storage Read Lock Class Anchor
TSW_CLASS_ANCHOR	TSWAITQ	Temporary Storage Wait Queue Class Anchor
TXD_INSTANCE	TXDI	Transaction Definition Instance
TXD_STATIC	TXDS	Transaction Definition Static
VCA	VCA	Temporary Storage String Control Area
WBA	WBANCH	Web Domain Anchor
WBAB_WEB_ANCHOR_BLOCK	WBANCH	Web 3270 Anchor
WBSTA_ANCHOR_BLOCK	WBSTA	Web State Anchor
WBSTH_STATE_BLOCK	WBSTH	Web State Block
WBSTU_STATE_DATA	WBSTU	Web State Data
WRA	WRA	Web Request Anchor
WRB	WRB	Web Request Block
WRBR	WRBR	Web Request Class Browse Block
XMANCHOR	XMANCH	Transaction Manager Anchor
XM_TCLASS	TCLASS	Transaction Class
XRH	TSXRH	Temporary Storage Auxiliary Storage Segment Header
XSA	XSANCH	Security Domain Anchor Block

Chapter 7.
Printing Abend-AID for CICS Information

This chapter describes how to print Abend-AID for CICS information for transaction abends and region dumps. You can print screens and reports using the PRINT and LPRINT primary commands and the Abend-AID Directory P (Print) line command. You can also print directory information for Abend-AID for CICS shared directories and transaction databases using the Compuware Shared Services (CSS) DIRECTORY, DIRX, and DIRECTORY SEQUENTIAL commands with the CWFXSDUT batch file utility.

The following topics are described:

- Online printing overview
- Printing screen images
- Printing Abend-AID for CICS-supplied reports
- Printing directory information.

Online Printing Overview

Note: ALL Abend-AID for CICS screen and report printing is done *online*. Refer to "Printing Directory Information" on page 7-8 for information about the batch printing of directory entry information from a shared directory or a transaction database.

When you issue the Abend-AID Directory P (Print) line command or the PRINT or LPRINT primary commands, Abend-AID for CICS writes the output from the print functions to a temporary print dataset. The attributes and disposition of this dataset are controlled by the Print Options and Initiation screen, which is shown in Figure 7-1 on page 7-2.

Print Options and Initiation Screen

The Print Options and Initiation screen allows you to modify site-defined defaults for print options and to submit print jobs. Options modified on this screen apply to the current Abend-AID for CICS session and all subsequent sessions.

Physical and logical screen prints are written to a temporary dataset when you use the PRINT and LPRINT primary commands, or the Abend-AID Directory P line command. Use this screen to print the contents of the dataset, delete the dataset, or keep the dataset without printing. If you have printed screens using the PRINT or LPRINT primary commands or the Abend-AID Directory P line command and do not initiate the print, delete, or keep of the temporary dataset, it is automatically printed, deleted, or kept when you exit Abend-AID for CICS using the print output options information on this screen.

Note: If you use multiple Abend-AID for CICS viewing servers, you must modify your print options profile on each viewing server.

To modify print options, complete the following procedure:

1. Display the Print Options and Initiation screen, shown in Figure 7-1, using one of the following methods:
   - Tab to the LIST option on the User Controls menu, which is described in Chapter 17, "Setting User Controls", and press Enter.
   - Enter **LIST** as a fast-path command.
   - Enter **=U.2** as a jump command after you select a dump.
   - Enter **=USER.2** as a jump command if you have not selected a dump.

Figure 7-1. Print Options and Initiation

```
 Abend-AID for CICS ----- Print Options and Initiation ---------------------
COMMAND ===>

Specify print information below, then type GO to submit the print job, or
SAVE to save your changes without printing, or CANCEL to cancel your changes.

Print option........ KN     PD - Print dataset and delete
                             D - Delete dataset without printing
                            KN - Keep dataset and continue with new dataset

Print Output Options:
SYSOUT Class............... A            Page Width (Characters)... 132
Destination................ LOCAL        Page Length (Lines)....... 60
Print Uppercase Only...... N

Jobcard Information:
1... //JOBNAME JOB ('ACCOUNTING.INFO'),'PROGRAMMER.NAME',
2... //            CLASS=A,MSGCLASS=A
3... //*
4... //*
5... //*
6... //*
```

Notes:

a. Everything that you print during a given Abend-AID for CICS session is written to a single temporary print dataset until you print the contents of the dataset from the Print Options and Initiation screen or log off Abend-AID for CICS. The temporary print dataset is allocated using the information specified when Abend-AID for CICS is installed. Refer to the *Abend-AID for CICS Installation and Customization Guide* for information about the viewing server configuration parameters for the temporary print dataset.

b. If you are accessing Abend-AID for CICS from VTAM or CICS, the temporary dataset uses the ID with which you logged onto Abend-AID for CICS as the high-level qualifier. You can change this qualifier using the VTAM/CICS print dataset prefix user profile option, which is described in "User Profile Screen" on page 17-1. For ISPF access, the temporary dataset uses the TSO profile prefix as the high-level qualifier.

c. The page width and length that are specified on the Print Options and Initiation screen at the time you issue a print command take effect for that printing. To reflect a change in page width/length in your printing, you must change these values on the Print Options and Initiation screen *before* you issue the print command.

d. Compuware recommends a page width of **132** (default) for all printing.

The Print Options and Initiation screen displays default print option values supplied at installation. These values control both the initiation and disposition of a print job and various options related to print output. If the defaults are acceptable to you, do nothing, and Abend-AID for CICS will use this set of print options. To customize the options to your individual preferences, proceed to step 2.

2. Overtype the default value of the print option you want to modify with the new value. Press the HELP (PF1) key on any field for field help.
3. Do one of the following:
   - To save the print options you modified, enter **END** (PF3) as a primary command.
   - To discard any modifications you made and return to the previous Abend-AID for CICS screen, enter **CANCEL** as a primary command.

Printing Screen Images

You can use the PRINT or LPRINT primary commands to print physical and logical screen images. PRINT and LPRINT have the same syntax, but differ as follows:

- The Abend-AID for CICS PRINT command prints a physical image of a screen to a sequential dataset. A physical image includes only the data currently displayed (contrasted to a logical image, which includes all data associated with a screen). A logical print is accomplished using the LPRINT command.

  When used *without* an optional parameter, PRINT prints a physical image of the screen currently displayed. When used *with* an optional parameter, PRINT prints a logical image of the screen specified by the parameter.
- The Abend-AID for CICS LPRINT command prints a logical image of a screen to a sequential dataset. Pressing the LPRINT PF key also executes this command. (PF23 is the default). A logical image includes all data associated with a screen, regardless of how much is currently displayed (contrasted to a physical image, which includes only the data currently displayed). A physical print is accomplished using the PRINT command.

  When used *without* an optional parameter, LPRINT prints a logical image of the screen currently displayed. When used *with* an optional parameter, LPRINT prints a logical image of the screen specified by the parameter.

Certain exceptions apply. A *physical* image of a screen is always printed, even if a logical print is requested, when the screen to be printed is one of the following:

- A nonscrollable screen
- A memory display screen
- A storage disassembly screen.

These exceptions apply both to currently displayed screens and to those specified by a parameter.

Valid syntax for the PRINT and LPRINT commands is described below.

```
>>--PRINT or LPRINT--+-------------------+--+-#ALL-------+--+-------------------+--+-------------------+--+-------------------+-->
                     +-fastpathcommand-+  +-#DB2ALL----+  +-$controlblockname-+  +-@symbolname 'storage comment'-+
                                          +-#SUMMARY----+
                                          +-#DB2SUMM----+

>--+-------------------------------------+--><
   +-@address.length 'storage comment'-+
```

fastpathcommand

The fast-path command of the screen to be printed.

#ALL

Valid for transaction entries only. Prints a *complete* transaction report. Refer to "Complete Transaction Abend Report" on page 7-5 for a description of what is contained in this report.

#DB2ALL

Valid for transaction entries only. Prints a *complete* transaction report, including DB2 information if available. Refer to "Complete DB2 Transaction Abend Report" on page 7-6 for a description of what is contained in this report.

#SUMMARY

Prints a summary report. Refer to "Transaction Abend Summary Report" on page 7-6 and "Region Dump Summary Report" on page 7-8 for a description of what is contained in a summary report, by entry type.

#DB2SUMM

Valid for transaction entries only. Prints a summary report, including the DB2 information if available. Refer to "DB2 Transaction Abend Summary Report" on page 7-7.

$controlblockname

Specifies to print the DSECT format of the named control block. Only DSECTs of single element control blocks (CSA or CSAOPFL, for example) can be printed this way. For other types of control blocks (FCT, for example), you must first display the control block's DSECT screen and then use the LPRINT command. Refer to Chapter 5, "Accessing Storage Information" for additional information about control blocks.

@symbolname 'storage comment'

Specifies to print the hexadecimal storage associated with the named symbol. The symbol name is required but the storage comment is optional (limited to 66 characters) and, if specified, must be surrounded by single quotation marks. Refer to Appendix B, "Symbols List" for a list of valid symbols. To display storage for other types of control blocks, you must supply the storage address and length of the control block (see next parameter).

@address.length 'storage comment'

Specifies to print the hexadecimal storage at the given address for the given length. The address is required and must be in hexadecimal notation. The default length is 4096 and the maximum length allowed is 1,048,576 (1 megabyte). The storage comment is optional (limited to 66 characters) and, if specified, must be surrounded by single quotation marks.

Example 1:

```
PRINT SUMMARY
```

Example 1 prints the Fault Summary screen. Compare this example with Example 2.

Example 2:

```
PRINT #SUMMARY
```

Example 2 prints the summary report for the currently selected directory entry.

Example 3:

```
LPRINT #DB2ALL
```

Example 3 prints the *complete* transaction report including the DB2 information if available for the currently selected transaction entry.

Example 4:

```
PRINT $CSA
```

Example 4 prints the DSECT of the CICS CSA control block.

Example 5:

```
LPRINT @CSA
```

Example 5 prints the hexadecimal storage associated with the CICS CSA control block.

Example 6:

```
PRINT @A000.8192
```

Example 6 prints the hexadecimal storage beginning at address 0000A000 for a length of 8192 bytes (through address 0000BFFF).

Printing Abend-AID for CICS-Supplied Reports

Abend-AID for CICS supplies several different reports that you can print, depending upon the type of entry you have selected. You can use the PRINT and LPRINT primary commands, or the Abend-AID Directory P (Print) line command.

The following reports are available. An index is provided at the end of each report. All screen images printed in a summary report are logical (rather than physical) images.

Complete Transaction Abend Report

To print a *complete* transaction abend report, enter the Abend-AID Directory **P** (Print) line command to the left of the Entry number field for the transaction entry, or select a transaction entry and enter **PRINT #ALL** or **LPRINT #ALL** on the command line of any Abend-AID for CICS screen.

A *complete* transaction abend report contains the following information:

- Entry Information
- Diagnostic Summary
- PSW Information
- Registers at abend
- User Execute Interface Block
- System Execute Interface Block
- Program Link Information
- Program Summary Information
- Program Detail
- Task Detail
- Terminal Detail
- Last 3270 Screen Image
- Data Stream Analysis
- File Information
- DFHRPL Concatenation
- Enqueues Held
- Hogan Control Blocks
- MSA Information
- Control Blocks/Storage menu
- Raw storage for all captured control blocks and areas
- Abbreviated trace table.

Transaction Abend Summary Report

To print a transaction abend summary report, select a transaction entry and enter **PRINT #SUMMARY** or **LPRINT #SUMMARY** on the command line of any Abend-AID for CICS screen.

A transaction abend summary report contains the following information:

- Entry Information
- Diagnostic Summary
- PSW Information
- Registers at abend
- User Execute Interface Block
- System Execute Interface Block
- Program Summary Information
- Program Detail
- Task Detail
- Terminal Detail
- Last 3270 Screen Image
- Data Stream Analysis
- File Information
- DFHRPL Concatenation
- Enqueues Held
- Hogan Control Blocks
- MSA Information.

Complete DB2 Transaction Abend Report

To print a *complete* DB2 transaction abend report, enter the Abend-AID Directory **P** (Print) line command to the left of the Entry number field for the DB2 entry, or select a DB2 entry and enter **PRINT #DB2ALL** or **LPRINT #DB2ALL** on the command line of any Abend-AID for CICS screen.

The *complete* DB2 report contains the following information:

- Entry Information
- Diagnostic Summary
- PSW Information

- Registers at abend
- User Execute Interface Block
- System Execute Interface Block
- Program Link Information
- Program Summary Information
- Program Detail
- Task Detail
- Terminal Detail
- Last 3270 Screen Image
- Data Stream Analysis
- File Information
- DFHRPL Concatenation
- Enqueues Held
- Hogan Control Blocks
- MSA Information
- DB2 Information menu
- Host Variables
- Bind Information
- Precompile Information
- Columns Referenced
- RCT Detail
- Package Dependencies
- Control Blocks/Storage menu
- Raw storage for all captured control blocks and areas
- Abbreviated trace table.

DB2 Transaction Abend Summary Report

To print a DB2 transaction abend summary report, select a DB2 entry and enter **PRINT #DB2SUMM** or **LPRINT #DB2SUMM** on the command line of any Abend-AID for CICS screen.

The DB2 summary report contains the following information:

- Entry Information
- Diagnostic Summary
- PSW Information
- Registers at abend
- User Execute Interface Block
- System Execute Interface Block
- Program Link Information
- Program Summary Information
- Program Detail
- Task Detail
- Terminal Detail
- File Information
- DFHRPL Concatenation
- Enqueues Held
- Last 3270 Screen Image
- Data Stream Analysis
- Hogan Control Blocks
- MSA Information
- DB2 Information menu
- Host Variables
- Bind Information
- Precompile Information
- Columns Referenced
- RCT Detail
- Package Dependencies.

Region Dump Summary Report

To print a region dump summary report, enter the Abend-AID Directory **P** (Print) line command to the left of the Entry number field for the region entry, or select a region entry and enter **PRINT #SUMMARY** or **LPRINT #SUMMARY** on the command line of any Abend-AID for CICS screen.

The contents of a region dump summary report are determined by the type of dump you select. Summary report contents, by dump type, are listed below.

For Non-CICS Region Dumps:
- Entry Information
- JES2 Syslog Buffers
- Storage Map.

For CICS Version 2 Region Dumps:
- Entry Information
- JES2 Syslog Buffers
- Diagnostic Summary
- CICS Task/Wait Analysis
- Global Enqueues
- Program Check Abend Trace Table
- Program Change Summary
- DFHRPL Concatenation
- SIT Interpretation
- PAM Summary
- PAM Byte Map Interpretation
- CICS Environmental Summary
- MVS Environmental Summary.

For CICS Version 4 and CICS Transaction Server for OS/390:
- Entry Information
- JES2 Syslog Buffers
- Diagnostic Summary
- CICS Task Summary
- Task/Wait Analysis
- Global Enqueues
- Kernel Task Summary
- Kernel Domain Error Table
- Dispatcher Domain Task Summary
- Transaction Manager Summary
- Program Change Summary
- DFHRPL Concatenation
- SIT Interpretation
- Storage Manager Suspend Queue
- Loader Domain Program Storage Map
- CICS Environmental Summary
- MVS Environmental Summary
- Dynamic Storage Area Summary.

Printing Directory Information

The DIRECTORY, DIRX, and DIRECTORY SEQUENTIAL commands are available through the Compuware Shared Services (CSS) Batch File Utility (CWFXSDUT). These commands list entries from a shared directory or transaction database to a sequential dataset that you can print. These commands do not allow you to print Abend-AID for CICS screen contents.

The DIRECTORY command lists selected entries in a shared directory or transaction database. The DIRX command functions similarly to the DIRECTORY command, but it also displays the attribute and allocation information. When a DIRX is performed on a shared directory, it displays the standard DIRX information for the shared directory and all transaction database attached to that shared directory, in addition to the following:

- Release of DDIO used to format the shared directory
- Minimum release of DDIO
- Current release of DDIO
- Formatting information
  - Number of blocks
  - Number of blocks used
  - Percentage of blocks in use
  - Number of extents.
- Class information

  Each catalog includes at least the following three *classes* of structures:

  - CLASS
  - SHRDIR
  - DATABASE.

  The class information in the DIRX report provides:

  - Class name
  - Class instance name
  - Class anchor RBN
  - Number of entries of each class
  - Current put number
  - Current transaction number
  - Key length
  - Key offset
  - Maximum element length.
- The status of the transaction files attached to the shared directory.

The DIRECTORY SEQUENTIAL command lists selected shared directory entries in a sequential file produced by the CSS EXPORT command.

Refer to Chapter 3, “Batch File Utility CWFXSDUT” of the *Compuware Shared Services User Reference Guide* for the valid syntax for the DIRECTORY, DIRX, and DIRECTORY SEQUENTIAL commands and for additional information about them.

Part 2.
Transaction Abend Processing

Part 2 of this guide describes the following procedures unique to transaction abend processing:

- Analyzing transaction abends
- Displaying additional transaction entry information
- Managing source files
- Using Abend-AID for CICS with Language Environment
- Analyzing data exceptions

Note: Application programmers should read this part of the guide in its entirety. System programmers may refer to this part of the guide on an as-needed basis.

The following chapters are in Part 2:

Chapter 8, "Analyzing Transaction Abends"

Chapter 8 describes how to analyze transaction abends using the Diagnostic Summary. This screen diagnoses and analyzes abends, provides reasons why they occur, and recommends solutions.

Chapter 9, "Displaying Additional Transaction Abend Information"

Chapter 9 describes how to display additional program and file information for transaction abends.

Chapter 10, "Managing Source Files"

Chapter 10 describes techniques for managing source files when source support for selected reports is available.

Chapter 11, "Using Abend-AID for CICS with Language Environment"

Chapter 11 describes the considerations for using Abend-AID for CICS with transactions running under Language Environment.

Chapter 12, "Analyzing Data Exceptions"

Chapter 12 describes a possible approach to solving a sample S0C7 data exception abend, using Abend-AID for CICS.

Chapter 8.
Analyzing Transaction Abends

This chapter describes how to analyze transaction abends using the Diagnostic Summary. Because the summary provides you nearly all the information you need for diagnosing the abend, begin your analysis using this screen. Also described are the following screens that you can access from the Diagnostic Summary for additional information about the abend:

- Program Detail
- Task Detail
- Terminal Detail
- Program Listing
- 3270 Bridge Information
- Expanded Data Field
- DFHRPL Concatenation
- User Execute Interface Block
- Last 3270 Screen Image
- Data Stream Analysis
- PSW Information
- Registers
- DB2 Information
  - Host Variables
  - Bind Information
  - Precompile Information
  - Columns Referenced
  - RCT Detail
  - Package Dependencies
- Hogan Information
  - Hogan ITCB
  - Hogan UTCB
  - Hogan UPCB
- DL/I Information
- MSA Information
  - DCI and Application DMCBS
  - DCI Trace.

Before beginning your analysis of the abend using the Diagnostic Summary, make sure you read Chapter 3, “Abend-AID for CICS Interface” to familiarize yourself with the Abend-AID for CICS screen layout and text display defaults. Note how to enter fast-path and line commands. In particular, review “Cursor Point-and-Shoot Feature” on page 3-6 for an explanation of the alternative methods for accessing program storage and detailed information about specific data elements. Online help is available for any Abend-AID for CICS screen, field, system message, or command.

For information about using the Diagnostic Summary for region dump analysis, refer to Chapter 14, “Analyzing Region Dumps”.

Diagnostic Summary

The Diagnostic Summary, shown in Figure 8-1 through Figure 8-5 on page 8-4, gives you the information you need for diagnosing a transaction abend. The summary analyzes the abend, provides a probable reason why it occurred, and usually suggests a resolution. For COBOL and PL/I programs compiled with source support, the actual statement number and source code of the statement in error are shown. The Diagnostic Summary consists of two or more pages and contains the following sections:

- Analysis of the Abend
- SQL Return Code (DB2 only)
- Host Variables (DB2 only)
- SQL Statement (DB2 only)
- COBOL Information, if applicable
- Next Sequential Instruction
- Last CALL or EXEC CICS
- Program Link Summary
- Other Task-Related Areas of Interest.

Figure 8-1. Diagnostic Summary, Page 1

```
 Abend-AID for CICS --------- Diagnostic Summary --------- Row 000001 of 000073
COMMAND ===>                                                SCROLL ===> PAGE

An ASRA abend occurred in program CCAADEMO.  The abending transaction was
AADM running at terminal D492 for user ID CICSUSER.

Analysis of the abend:

The Data Exception is caused when a decimal instruction is attempted on a
field that does not contain valid packed data, eg. contains an invalid digit
(not 0-9), or its last byte contains an invalid sign (Not F, C, OR D).


The abending statement is:

000413                   COMPUTE CURR-PAY   EQUAL WA-HOURS * WA-RATE

This statement is contained in paragraph "300-EMPLOYEE-PAY-RTN" of program
CCAADEMO.

                              COBOL Information
```

Figure 8-2. Diagnostic Summary, Page 2

```
 Abend-AID for CICS --------- Diagnostic Summary --------- Row 000020 of 000073
COMMAND ===>                                                SCROLL ===> PAGE
                             COBOL Information


      Current values of fields on abending statement:

Level/Field Name                     Picture/Type     Value
 77 CURR-PAY                         9(5)V99             0000000
 02 WA-HOURS                       # 999                 ***
 02 WA-RATE                          9(3)V99             00950

       '#' - Indicates field contains invalid data


Next Sequential Instruction

The next statement is:

000414                   COMPUTE CURR-TAXES EQUAL CURR-PAY * WA-TAX-RATE

This statement is contained in paragraph "300-EMPLOYEE-PAY-RTN" of program
CCAADEMO.
```

Figure 8-3. Diagnostic Summary, Page 3

```
 Abend-AID for CICS --------- Diagnostic Summary --------- Row 000047 of 000073
COMMAND ===>                                                SCROLL ===> PAGE


Next Sequential Instruction


The program was compiled on 14JAN2004 at 8:09:26 and is 0018A0 bytes long.
It is part of load module CCAADEMO which was loaded from CW.CC.DEMO.PGMLOAD.
It was link edited on 14APR2002 . The load module is 001D30 bytes long.
The program AMODE was 31 .  The program RMODE was 24 .

The execution key for this program was USER_KEY.

Last Call or EXEC CICS Request

The last call or 'EXEC CICS' command was:

000381         *EXEC CICS RECEIVE
000382         *          INTO   (DUMMY-EMP)
000383         *          LENGTH (DUMMY-LEN)
000384         *END-EXEC.
000385               MOVE '..{ .   .      00288   ' TO DFHEIV0
000386              CALL 'DFHEI1' USING DFHEIV0  DUMMY-EMP DUMMY-LEN.
```

Figure 8-4. Diagnostic Summary, Page 4

```
 Abend-AID for CICS --------- Diagnostic Summary --------- Row 000066 of 000073
COMMAND ===>                                                SCROLL ===> PAGE

Last Call or EXEC CICS Request


This statement is contained in paragraph "200-RECEIVE-INPUT" of program
CCAADEMO.

Program Link Summary

Called    Called    ------- Status -------  Calling   Calling   Return
Load Mod  Program                            Load Mod  Program   Offset
CCAADEMO  CCAADEMO  Linked By                SYSTEM              000000


Other Task-Related Areas of Interest:
DATASTRM -  Data Stream Analysis
EIB      -  User Execute Interface Block
```

Figure 8-5. Diagnostic Summary, Page 5

```
 Abend-AID for CICS --------- Diagnostic Summary --------- Row 000070 of 000073
COMMAND ===>                                                SCROLL ===> PAGE


Other Task-Related Areas of Interest:
PSW      -  Program Status Word
REGS     -  Registers
SCREEN   -  Last 3270 Screen
TRACE    -  CICS Trace
```

Access the Diagnostic Summary by doing *one* of the following:

- Enter **S** as a line command on the Abend-AID Directory next to the entry for the transaction abend you want to analyze.
- If you have already selected the transaction abend, do *one* of the following:
  - Directly access the summary from the Abend-AID for CICS Primary Options menu.
  - Enter **DIAG** as a fast-path command or **=1** as a jump command on any Abend-AID for CICS screen.
- Enter the AADFT or AADFX AADF transaction command (CICS access only).

To analyze the selected transaction abend, do the following:

1. Obtain from the first two sentences of the summary the abend type, the program name, the transaction ID, and the terminal ID associated with the abending transaction. Use the cursor point-and-shoot feature and press Enter to access the IBM message text for the abend code, and program, task, and terminal details related to the abend. Refer to "Program Detail Screen" on page 8-6, "Task Detail Screen" on page 8-8, and "Terminal Detail Screen" on page 8-9for a description of these screens.
2. Review the Analysis of the Abend section for a description of the abend and an explanation of the probable cause. For programs compiled with source support, Abend-AID for CICS displays the abending statement. Use the the cursor point-and-shoot feature and press Enter at the statement number field to access the Program Listing screen, which is explained in "Program Listing Screen" on page 8-10.
3. For COBOL programs, identify the field(s) in error by reviewing the COBOL Information section. Use the cursor point-and-shoot feature and press Enter at any entry in the Level/Field Name field to display the Program Listing screen for working storage, which is explained in "Working Storage" on page 9-6. Press Enter at any entry in the Value field to display the Expanded Data Field screen, which is explained in "Expanded Data Field Screen" on page 8-12.
4. From the Next Sequential Instruction section, determine where the program was executing when it abended, and obtain the following information about the abending program:

   – Program's compile date
   – Program's link-edit date
   – Program name and module lengths
   – Load module name and the load library name
   – Next statement to be executed after the abending statement.

   Use the cursor point-and-shoot feature to access additional information about data displayed in the Next Sequential Instruction section as follows:

   – Press Enter at the statement number field to access the Program Listing screen, which is explained in "Program Listing Screen" on page 8-10.

   – If the program is not COBOL or PL/I or was not compiled with source support, Abend-AID for CICS displays the displacement of the next sequential instruction. Press Enter at the displacement to disassemble the program and display the Storage Disassembly screen, which is explained in "Storage Disassembly Screen" on page 9-13.

   – Press Enter at the program name field to access the Program Detail screen, which is explained in "Program Detail Screen" on page 8-6.

   – Press Enter at the load library name field to access the DFHRPL Concatenation screen, which is explained in "DFHRPL Concatenation Screen" on page 8-13.
5. Note the last call or EXEC CICS command and its location in the abending program. Use the cursor point-and-shoot feature and press Enter at the statement number field to access the Program Listing screen, which is explained in "Program Listing Screen" on page 8-10. If the program is not COBOL or was not compiled with source support, Abend-AID for CICS displays the displacement of the last call or EXEC CICS request. Press Enter at the displacement to disassemble the program.
6. Review the Program Link Summary section for a summary of the program execution sequence for every module used by a transaction up to the abending module. Use the cursor point-and-shoot feature to access additional information about called and calling programs as follows:

   – Press the HEXD PF key at a Called or Calling field to access the PPT in hexadecimal format. Abend-AID for CICS displays the Memory Display screen, which is explained in "Memory Display" on page 5-3.

- Press the DSECT PF key at a Called or Calling field to access the PPT in DSECT format, when available. Abend-AID for CICS displays the DSECT Support screen, which is explained in "Displaying Control Blocks in DSECT Format" on page 6-1.

7. Review the Other Task-Related Areas of Interest section, which gives you a dynamic menu allowing direct access to areas related to the abending task that may help in your analysis. Use the cursor point-and-shoot feature and press Enter to access the following additional screens when available:

   - "Data Stream Analysis Screen" on page 8-16
   - "User Execute Interface Block Screen" on page 8-14
   - "PSW Analysis Screen" on page 8-18
   - "Registers Screen" on page 8-19
   - "Last 3270 Screen Image" on page 8-15
   - "Trace Listing Screen" on page 14-9
   - "Hogan Information Menu" on page 8-25
   - "DL/I Information Screen" on page 8-27
   - "MSA Information Screen" on page 8-28

   You can also use the cursor point-and-shoot feature and press the HEXD PF key at the EIB, REGS, and PSW fields to display the MEMORY Display screen, which is described in "Memory Display" on page 5-3. In addition, press the DSECT PF key at the EIB field to display the DSECT screen, which is described in "Displaying Control Blocks in DSECT Format" on page 6-1.

Program Detail Screen

The Program Detail screen, shown in Figure 8-6 on page 8-7, provides detailed information about the selected program. You can use the cursor point-and-shoot feature to access the DFHRPL concatenation and program storage.

Note: All references to *program* on Abend-AID for CICS displays refer to the program CSECT, and not the load module.

Access the Program Detail screen in *one* of the following ways:

- Use the cursor point-and-shoot feature and press Enter at the program name on the Diagnostic Summary or Task Detail screen.
- Use the cursor point-and-shoot feature and press Enter at the program name field on the Program Link Information or Program Summary Information screen.
- Enter **D** as a line command on the Program Link Information or Program Summary Information screen.
- Enter **PGMDET program-name** as a fast-path command on any Abend-AID for CICS screen.

Figure 8-6. Program Detail Screen

```
 Abend-AID for CICS ------------ Program Detail ------------------------------
COMMAND ===>

Program CCAADEMO is part of load module CCAADEMO which was loaded from
CW.CC.DEMO.PGMLOAD
Source was loaded from dataset MP.BETA.DEMO.LISTFILE
To display the source listing for this program, select Listing
To display Cobol storage areas for this program, select Storage Areas

        Program Information                  Program-Related Areas
Compile Date............ 14JAN2004     PPT Entry................ 082C16C8
Compile Time............ 08:09:26      Commarea................. 08308018
Link Date............... 14JAN2004     Entry Point Address...... 08A2F048
Source Compile Date...... 14JAN2004     Savearea................. 08A32030
Source Compile Time...... 08:09:26      BREXIT................... Y
Program Size............ 000018A0
Program Rmode........... 24
Program Amode........... 31

                            Language Information
CICS Type............... COMMAND        EXECkey.................. USER
Language................ COBOL/MVS      Data above 16meg?........ Y
LE/370 Enabled?......... Y
```

To obtain additional information about the abending program, do the following:

1. Note general information about the abending program, such as compile date and time, program size, and language.
2. Use the cursor point-and-shoot feature and press Enter at the load library name field to access the DFHRPL Concatenation screen, which is explained in “DFHRPL Concatenation Screen” on page 8-13.
3. Use the cursor point-and-shoot feature and press Enter at the Listing field to access the Program Listing screen, which is explained in “Program Listing Screen” on page 8-10.

   Note: The Program Listing screen is available only for COBOL and PL/I programs compiled with the Compuware COBOL language processor or the Compuware PL/I language processor.

4. Use the cursor point-and-shoot feature and press Enter at the Storage Areas field to display:
   - Working storage, linkage section, external cells, and task global table (TGT) for COBOL programs.
   - Formatted storage for PL/I programs with source support.
   - Automatic, static, controlled, and external storage areas in hexadecimal format for PL/I programs.
   - Save areas in hexadecimal format for Assembler programs.
5. Access the specific storage information in hexadecimal format for the processing program table (PPT) entry, the commarea, the entry point address, and the savearea by using the cursor point-and-shoot feature and pressing the HEXD PF key to display the Memory Display screen, which is explained in “Memory Display” on page 5-3.
6. Access the specific storage information in DSECT format for the PPT entry by using the cursor point-and-shoot feature and pressing the DSECT PF key to display the DSECT Support screen, which is explained in “Displaying Control Blocks in DSECT Format” on page 6-1.

Task Detail Screen

The Task Detail screen, shown in Figure 8-7, provides detailed information about the status of the transaction at the time of the abend. You can use the cursor point-and-shoot feature to access information about the resources being used, such as the program control table (PCT) entry, the task control area (TCA), the execute interface block (EIB), and the currently held enqueues.

Besides accessing the Task Detail screen using the cursor point-and-shoot feature and pressing Enter on the Diagnostic Summary, you can access this screen directly from the Abend-AID for CICS Primary Options menu or by entering **TASK** as a fast-path command on any Abend-AID for CICS screen.

Figure 8-7. Task Detail Screen

```
 Abend-AID for CICS ----------- Task Detail ------------ Row 000001 of 000004
COMMAND ===>                                              SCROLL ===> PAGE

Transaction ID........... AADM      Abending Program............... CCAADEMO
To display Bridge information, select Bridge
      Transaction Information             Transaction Statistics
Initial Program.......... CCAADEMO  Number of Storage Violations... 0
Terminal ID.............. D492
Task Number.............. 00038
User ID.................. CICSUSER
Operator ID.............                 Task-Related Areas
Priority................ 001       TCA (System)................... 00063100
Primed Size............. 0000      TCA (User)..................... 00063000
Transaction Class.......            TWA............................ 00000000
Original Abend........... ASRA      PCT Entry...................... 082C3180
Current Abend............ ASRA

                       Other Areas of Interest
DATASTR  -  Data Stream Analysis
EIB      -  User Execute Interface Block
PSW      -  Program Status Word
REGS     -  Registers
SCREEN   -  Last 3270 Screen
TRACE    -  CICS Trace
```

To obtain additional information about the abending task, do the following:

1. Note general information about the abending task, such as program name, task number, and number of storage violations.
2. Access the specific storage information in hexadecimal format for the system and user TCA, the TWA, and the PCT entry using the cursor point-and-shoot feature and pressing the HEXD PF key to display the Memory Display screen, which is explained in "Memory Display" on page 5-3.
3. Access the specific storage information in DSECT format for the system and user TCA, and the PCT entry by using the cursor point-and-shoot feature and pressing the DSECT PF key to display the DSECT Support screen, which is explained in "Displaying Control Blocks in DSECT Format" on page 6-1.
4. Access other task-related information by using the cursor point-and-shoot feature and pressing Enter to display the following screens:
   - "3270 Bridge Information Screen" on page 8-11
   - "Data Stream Analysis Screen" on page 8-16
   - "User Execute Interface Block Screen" on page 8-14
   - "PSW Information Screen" on page 8-17
   - "Registers Screen" on page 8-19

- "Last 3270 Screen Image" on page 8-15
- "Trace Listing Screen" on page 14-9

You can also use the cursor point-and-shoot feature and press the HEXD PF key at the EIB, REGS, and PSW fields to display the MEMORY Display screen, which is described in "Memory Display" on page 5-3. In addition, press the DSECT PF key at the EIB field to display the DSECT screen, which is described in "Displaying Control Blocks in DSECT Format" on page 6-1.

Terminal Detail Screen

The Terminal Detail screen, shown in Figure 8-8 on page 8-10, provides detailed information about the terminal associated with the abending transaction. You can use the cursor point-and-shoot feature to access specific information about the terminal and terminal-related storage, such as the last 3270 image and the data stream analysis.

Note: The Last 3270 Screen Image and Data Stream Analysis screens are not available if the abending transaction is a bridge transaction.

Besides accessing the Terminal Detail screen using the cursor point-and-shoot feature and pressing Enter on the Diagnostic Summary or Task Detail screens, you can access this screen directly from the Abend-AID for CICS Primary Options menu or by entering **TERM** as a fast-path command on any Abend-AID for CICS screen.

To obtain additional information about the terminal associated with the abending task, do the following:

1. Note general information about the terminal, such as the terminal ID, terminal type and model, and status.
2. Access the specific storage information in hexadecimal format for the terminal control table user area (TCTUA), the terminal control table terminal entry (TCTTE), and the terminal input/output area (TIOA) by using the cursor point-and-shoot feature and pressing the HEXD PF key to display the Memory Display screen, which is explained in "Memory Display" on page 5-3.
3. Access the specific storage information in DSECT format for the TCTTE by using the cursor point-and-shoot feature and pressing the DSECT PF key to display the DSECT Support screen, which is explained in "Displaying Control Blocks in DSECT Format" on page 6-1.
4. Access other terminal-related information by using the cursor point-and-shoot feature and pressing Enter to display the following screens:
   - "Last 3270 Screen Image" on page 8-15
   - "Data Stream Analysis Screen" on page 8-16

Figure 8-8. Terminal Detail Screen

```
 Abend-AID for CICS ----------- Terminal Detail -----------------------------
COMMAND ===>

Terminal ID............. D492          Display Last 3270 Image
Netname................ TFHD492        Display Data Stream Analysis

       Terminal Information                     Terminal Status
Type.................... 3277R         In Service?..................... Y
Model................... 2             Attended?....................... N
Operator ID.............               Extended Attributes?............ Y
User ID................. CICSUSER      Extended Color?................. Y
Default Screen Size..... 24X80         Light Pen....................... N
Alternate Size.......... 24X80         Uppercase/Dual?................. U
Alternate in Use?....... N
Map Name................
Attention Identifier..... <ENTER>
       Terminal Statistics                    Terminal-Related Areas
Number of Transactions... 7             TCTUA................... 082BA040
Number of Tran Errors.... 1             TCTTE................... 0828A3F0
Number of Inputs........ 9              TIOA.................... 00000000
Number of Outputs....... 11
```

Program Listing Screen

The Program Listing screen, shown in Figure 8-9 on page 8-11, displays the source listing statements of the selected program, identifying the active statement (abending offset, program call, EXEC link, and so forth) with a highlight bar. For COBOL programs, Abend-AID for CICS displays the Working-Storage Section, the Linkage Section, and the Procedure Division of the selected program. You can use the PF keys to scroll throughout the sections. For PL/I programs, Abend-AID for CICS displays the entire source listing. As you move through the listing, to reposition the display to the active statement, use the cursor point-and-shoot feature to tab to the RESET field and press Enter. To reposition the display to the statement at the point of entry, use the cursor point-and-shoot feature to tab to the ENTRY field and press Enter. Besides accessing the Program Listing screen from the Diagnostic Summary, you can access this screen by using the cursor point-and-shoot feature and pressing Enter at the Listing field on the Program Detail screen. Alternatively, you can enter **L** as a line command on the Program Link Information or Program Summary Information screen for a program compiled with the Compuware COBOL language processor or the Compuware PL/I language processor, or enter **PLIST program-name** as a fast-path command on any Abend-AID for CICS screen.

Figure 8-9. Program Listing Screen

```
 Abend-AID for CICS ---------- Program Listing ----------- Row 000051 of 000287
COMMAND ===>                                                SCROLL ===> PAGE
                                                                         ==>
To reset display to the abending/last executed statement, select RESET
To reset display to the point of entry into this listing, select ENTRY
Program Listing for CCAADEMO    Compiled 14JAN2004 at 08:09:26


  000381        *EXEC CICS HANDLE CONDITION DSIDERR(NOT-FOUND)
  000382        *                           NOTOPEN(NOT-OPEN)
  000383        *END-EXEC.
  000384              MOVE '......................00290   ' TO DFHEIV0
  000385             CALL 'DFHEI1' USING DFHEIV0
  000386              SERVICE LABEL
  000387              GO TO  NOT-FOUND NOT-OPEN DEPENDING ON DFHEIGDI.
  000388             IF PAYEMP1 EQUAL '00002'
  000389                  GO TO 900-PROCESS-00002-SELECTION.
  000390             IF PAYEMP1 EQUAL '00003'
  000391                  GO TO 990-PROCESS-00007-SELECTION.
  000392             IF PAYEMP1 EQUAL '00999'
  000393                  MOVE PAYROLL-DATA-EMP999 TO WORK-AREA
  000394                  GO TO 300-EMPLOYEE-PAY-RTN.
  000395             MOVE '*** EMPLOYEE NOT ON FILE ****' TO PAYPROMPT.
```

Accessing Storage for a Variable

For COBOL programs only, you can access related storage for a variable from the Program Listing screen using the following methods:

Tab to the corresponding statement number for the variable and do *one* of the following:

- Press Enter.
- Enter the **P** or **P1** (Peek) line command to display program storage for the first variable on the statement. To position the program storage display at other than the first variable, enter **Pn**, where **n** is the relative number of the variable on the statement. For example, enter **P3** to access program storage positioned at the storage for the third variable on the statement. The Program Listing screen for working storage is described in "Working Storage" on page 9-6.

  Note: Ensure that you begin typing the P (Peek) line command in the first position of the statement number.

After using either of these methods for accessing program storage, press the END key (PF3) to reposition the display to the statement for the variable in the Procedure Division as the first line.

3270 Bridge Information Screen

The 3270 Bridge Information screen, shown in Figure 8-10 on page 8-12, provides 3270 Bridge related-information about the abending task. You can use the cursor point-and-shoot feature at the highlighted fields to access specific storage information in hexadecimal or DSECT formats.

Access the 3270 Bridge Information screen by using the cursor point-and-shoot feature and pressing Enter at the Bridge field on the Task Detail screen for abending bridge transactions.

Figure 8-10. 3270 Bridge Information Screen

```
 Abend-AID for CICS ------- 3270 Bridge Information --------------------------
COMMAND ===>


Original Transaction ID.. BRG2          Start Code..............
Bridge Transaction ID.... BRG2          Trace Flag............... N
Bridge Program........... DFHOCBRE      Facilitylike Name........ CBRF
TXN_CS Extension......... 0DA68030      Facilitylike Keep Time...
BRXA Header.............. 0DA68090      Facilitylike Type........ }AAA
BRXA Transaction Area.... 0DA680B8      Screen Height............ 00
BRXA Command Area........ 0DA68134      Screen Width............. 00
BRXA User Area........... 0DB00008      Alternate Screen Height.. 00
Calling Program.........                Alternate Screen Width... 00
User ID.................. SPIKEER       Function Code............ 00
User Abend Code.......... AEIL          Command Code............. 06
```

Expanded Data Field Screen

The Expanded Data Field screen, shown in Figure 8-11, displays in vertical-hexadecimal format the value in the selected field. Use the cursor point-and-shoot feature at the address field to display the Memory Display screen, which is explained in "Memory Display" on page 5-3. Access the Expanded Data Field screen from the Diagnostic Summary by using the cursor point-and-shoot feature and pressing Enter at any entry in the Value field of the COBOL Information section or the Analysis of the Abend section for PL/I programs. For a transaction abend with DB2 information, use the cursor point-and-shoot feature and press Enter at any entry in the Data field on the Host Variables screen.

Figure 8-11. Expanded Data Field Screen

```
 Abend-AID for CICS -------- Expanded Data Field --------- Row 000001 of 000006
COMMAND ===>                                                SCROLL ===> PAGE


Field Name:             77 CURR-PAY                          9(5)

08A32288   Char  0000000
           Zone  FFFFFFF
          Digit  0000000
                 1...+..
```

DFHRPL Concatenation Screen

The DFHRPL Concatenation screen, shown in Figure 8-12, displays the datasets and their associated volsers for the DFHRPL statement defined to the CICS JCL at the time of this transaction abend. Besides accessing the DFHRPL Concatenation screen using the cursor point-and-shoot feature and pressing Enter on the Program Detail screen, you can access this screen by entering **DFHRPL** as a fast-path command on any Abend-AID for CICS screen.

Figure 8-12. DFHRPL Concatenation Screen

```
 Abend-AID for CICS -------- DFHRPL Concatenation -------- Row 000001 of 000026
COMMAND ===>                                                SCROLL ===> PAGE

Sequence  Dataset Name                                    Volser
********  ******************************************      ******
       0  EFHRHK0.R330.TABLIB                             PRD915
       1  CW.CC.IMS310.TABLIB                             PRD907
       2  SYS2.TMONCICS.V10ESA.LOADLIB                    CICR1B
       3  CICS330.SDFHAUTH                                CICR1D
       4  CICS330.SDFHLOAD                                CICR1D
       5  EFHRHK0.LOADRHK                                 PRD906
       6  MP.BETA.FX.LOAD.FIX                             PRD930
       7  MP.BETA.FX.LOAD2                                PRD929
       8  MP.BETA.CX.LOAD                                 PRD927
       9  SYS2.TD.LOAD                                    NCPR1A
      10  SYS2.XPEDCICS.R650.CICS330.LOAD                 CICR1A
      11  SYS2.XPEDCICS.R650.HELP.LOAD                    CICR1A
      12  EFHKAT0.TEST.PGMLOAD                            PRD915
      13  CW.CC.TEST.PGMLOAD                              PRD906
      14  CW.CC.DEMO.PGMLOAD                              PRD906
      15  CW.CC.TESTLIB                                   PRD906
      16  EFHJNW0.TEST.PGMLOAD                            PRD905
      17  PLI.V2R3M0.PLILINK                              MVSR1B
      18  PLI.V2R3M0.PLIBASE                              MVSR1B
```

User Execute Interface Block Screen

The User Execute Interface Block screen, shown in Figure 8-13, provides the interpreted value of the EXEC interface block fields. Besides accessing the User Execute Interface Block screen using the cursor point-and-shoot feature and pressing Enter on the Diagnostic Summary or Task Detail screen, you can access this screen by entering **EIBU** as a fast-path command on any Abend-AID for CICS screen.

Use the cursor point-and-shoot feature on the User Execute Interface Block screen to do the following:

- Press Enter at the System field to toggle between the User Execute Interface Block screen and the System Execute Interface Block screen.
- Press the HEXD PF key at the user EIB address field to display the control block in hexadecimal format.
- Press the DSECT PF key at the user EIB address field to display the control block in DSECT format.

Figure 8-13. User Execute Interface Block Screen

```
 Abend-AID for CICS ---- User Execute Interface Block ---- Row 000001 of 000031
COMMAND ===>                                                SCROLL ===> PAGE
                                                                         ==>
To display System EIB, select System

Address of displayed User EIB.. 001010D0

Name          Value         Interpretation   Description
************  ************  ***************  *********************************
EIB TIME....  07:03:21                       TASK START TIME
EIB DATE....  02FEB2002                      TASK START DATE
EIB TRNID...  AADM                           TRANSACTION IDENTIFIER
EIB TASKN...  00038                          TASK NUMBER
EIB TRMID...  D492                           TERMINAL IDENTIFIER
EIB RSVD1...  00                             RESERVED
EIB CPOSN...  0006                           CURSOR ADDRESS
EIB CALEN...  00000001                       COMMUNICATION AREA LENGTH
EIB AID.....  7D          ENTER              ATTENTION IDENTIFIER
EIB FN......  0402        RECEIVE            CODE OF THE LAST CICS EXEC
EIB RCODE...  00200000                       RESPONSE CODE FROM LAST CICS EXEC
EIB DS......                                 LAST FILE REQUEST
EIB REQID...  00                             REQUEST IDENTIFIER FOR INTERVAL CON
EIB RSRCE...  D492                           RESOURCE ACCESSED BY LAST CICS EXEC
EIB SYNC....  00                             X'FF' SYNCPOINT REQUESTED
```

Last 3270 Screen Image

The Last 3270 Screen Image, shown in Figure 8-14, displays the last screen image for the abending transaction. Besides accessing the Last 3270 Screen Image using the cursor point-and-shoot feature and pressing Enter on the Diagnostic Summary, Task Detail, or Terminal Detail screens, you can access this screen directly from the Last 3270 Menu or by entering **SCREEN** as a fast-path command on any Abend-AID for CICS screen.

Figure 8-14. Last 3270 Screen Image

```
AADM 00001 - ENTER EMPLOYEE NUMBER

  *** COMPUWARE CORPORATION ***
    DEMONSTRATION TRANSACTION

  ENTER DESIRED EMPLOYEE ABOVE:
  00001 - CAUSES ASRA ABEND
  00002 - CAUSES AEIM
  00003 - CAUSES AEIP
  00004 - CEE OUT-OF-STORAGE
  00005 - ##################
  00999 - ENDS NORMALLY
```

Note: If the **L3270** mnemonic identifier for the Last 3270 Screen is displayed in a different color than the other menu options and is preceded by an asterisk (*) on the Primary Options menu, the last 3270 screen was not captured. Entering **SCREEN** as a fast-path command displays a message that explains why the last 3270 screen is not available.

Data Stream Analysis Screen

The Data Stream Analysis screen, shown in Figure 8-15, displays the last 3270 screen fields for the abending transaction, showing the order of each field and data stream in the buffer. In addition, this screen displays the I/O command and the write control character, if available, and identifies any errors in the data stream. Besides accessing the Data Stream Analysis screen using the cursor point-and-shoot feature and pressing Enter on the Diagnostic Summary or Terminal Detail screens, you can access this screen directly from the Last 3270 Menu or by entering **DATASTRM** as a fast-path command on any Abend-AID for CICS screen.

Figure 8-15. Data Stream Analysis Screen

```
 Abend-AID for CICS -------- Data Stream Analysis -------- Row 000001 of 000055
COMMAND ===>                                                SCROLL ===> PAGE
                                                                         ==>
Screen Size..............  24 x  80   Cursor Position... Row 01 Column  07
Last 3270 Buffer Address... 08A891AF
To display the Last 3270 screen image, select Image

Row Column Length Control Orders/Attributes             Data
 01  01     05    Start Field Extended  PROT            AADM
                                        Numeric

 01  06     06    Start Field Extended  UNPROT          00001
                                        Numeric

 01  12     69    Start Field Extended  PROT            - ENTER EMPLOYEE NUMBER
                                        Numeric

 02  01     80

 03  01     80                                              *** COMPUWARE CORPOR

 04  01     80                                                DEMONSTRATION TRAN
```

PSW Information Screen

The PSW Information screen, shown in Figure 8-16, provides information about the program status word (PSW) and the next sequential instruction. Besides accessing the PSW Information screen using the cursor point-and-shoot feature and pressing Enter on the Diagnostic Summary or Task Detail screens, you can access this screen by entering **PSW** as a fast-path command on any Abend-AID for CICS screen.

Use the cursor point-and-shoot feature to do the following:

- Press Enter at the first word of the PSW to display the PSW Analysis screen, which is explained in "PSW Analysis Screen" on page 8-18.
- Press Enter at the second word of the PSW, at the program offset, and at the address of the abending instruction to display the Storage Disassembly screen for these field, which is explained in "Storage Disassembly Screen" on page 9-13.
- Press Enter at the Program field to display the Program Detail screen, which is explained in "Program Detail Screen" on page 8-6.
- Press the HEXD PF key at any address field to display the Memory Display screen, which is explained in "Memory Display" on page 5-3.
- Press Enter at the REGS field to access the registers at the time of the abend.

Figure 8-16. PSW Information Screen

```
 Abend-AID for CICS ---------- PSW Information ----------- Row 000001 of 000018
COMMAND ===>                                                 SCROLL ===> PAGE


To display Registers at abend, select REGS

Program Status Word at Time of Abend         Program Information

PSW................. 078D1000 88A2FE0C
Instruction Length.. 0006                    Program..CCAADEMO
Interrupt Code...... 0007                    Offset...00000D78
Description......... Multiply Decimal
Address   Instruction      Opcode  D1(L1,B1),D2(L2,B2)
08A2FE06  FC42 D1C8 D1D0   MP      456(5,13),464(3,13)

The first operand was located at address 08A321F8 and contained -

000000CC CF        *   ..   *

The second operand was located at address 08A32200 and contained -

00950F    * n. *
```

PSW Analysis Screen

The PSW Analysis screen, shown in Figure 8-17, provides additional information about the program status word (PSW). Access the PSW Analysis screen by using the cursor point-and-shoot feature and pressing Enter at the first word of the PSW on the PSW Information screen.

Use the cursor point-and-shoot feature at the Instruction Address field to do the following:

- Press the HEXD PF key to display the Memory Display screen, which is explained in "Memory Display" on page 5-3.
- Press Enter to display the Storage Disassembly screen, which is explained in "Storage Disassembly Screen" on page 9-13.

Figure 8-17. PSW Analysis Screen

```
 Abend-AID for CICS ------------- PSW Analysis ------------------------------
COMMAND ===>

PSW................... 078D1000 88A2FE0C  Addressing Mode............ 31-BIT
Instruction Address... 08A2FE0C

Program-Event Recording Mask..... OFF     Program Masks:
Dynamic Address Translation Mode. ON      Fixed-Point Overflow....... OFF
Input/Output Mask................ ON      Decimal Overflow........... OFF
External Mask.................... ON      Exponent Underflow......... OFF
PSW Key.......................... 8       Significance............... OFF
Machine Check Mask............... ON
Wait State....................... OFF
Condition Code................... 1
Address Space Control............ PRIMARY-SPACE
State............................ PROBLEM
```

Registers Screen

The Registers screen, shown in Figure 8-18, provides the values of the registers for the abending transaction. Use the cursor point-and-shoot feature and press the HEXD PF key at any register address to display the value in hexadecimal format on the Memory Display screen, which is explained in "Memory Display" on page 5-3. To access the PSW at the time of the abend, use the cursor point-and-shoot feature and press Enter at the PSW field. Besides accessing the Registers screen using the cursor point-and-shoot feature and pressing Enter on the Diagnostic Summary or Task Detail screens, you can access this screen by entering **REGS** as a fast-path command on any Abend-AID for CICS screen.

Figure 8-18. Registers Screen

```
 Abend-AID for CICS -------------- Registers ---------------------------------
COMMAND ===>

To display the PSW at abend, select PSW

Registers at abend:

R00 08A32184 is within a CICS31 storage area              at offset 00000184
R01 08A321F8 is within a CICS31 storage area              at offset 000001F8
R02 30A322B0
R03 08A2FB92 is within module CCAADEMO                    at offset 00000B4A
R04 08A2F09C is within module CCAADEMO                    at offset 00000054
R05 00000000
R06 0000000C
R07 08308018
R08 0013C0C4 is within a USER24 storage area              at offset 000000C4
R09 08A2F100 is within module CCAADEMO                    at offset 000000B8
R10 08A32250 is within a CICS31 storage area              at offset 00000250
R11 08A2F7C8 is within module CCAADEMO                    at offset 00000780
R12 08A2F0C8 is within module CCAADEMO                    at offset 00000080
R13 08A32030 is within a CICS31 storage area              at offset 00000030
R14 88A2FD0E is within module CCAADEMO                    at offset 00000CC6
R15 00000000
```

DB2 Information Menu

The DB2 Information menu, shown in Figure 8-19, lets you display additional DB2 information about the abending transaction if your site is licensed for, and has installed, the Abend-AID for CICS DB2 extra-cost option. After you select a transaction abend with DB2 information, you can access this screen from the Diagnostic Summary, or any Abend-AID for CICS screen, by entering **DB2** as a fast-path command.

Figure 8-19. DB2 Information Menu

```
 Abend-AID for CICS ----------- DB2 Information -----------------------------
COMMAND ===>

DB2 Rel.... 8.1.0
AuthID..... CWXAAD2
DB2SSID.... DSNG


1  HOSTVAR  Host Variables             4  COLSREF  Columns Referenced

2  BIND     Bind Information           5  RCT      RCT Detail

3  PRECOMP  Precompile Information     6  DEPN     Dependencies
```

Host Variables Screen

The Host Variables screen, shown in Figure 8-20, displays information about the host variable(s) referenced in the SQL statement for the abending transaction. Use the cursor point-and-shoot feature and press Enter at any entry in the Data field to access the record key and record data in vertical-hexadecimal format. Abend-AID for CICS displays the Expanded Data Field screen, which is described in "Expanded Data Field Screen" on page 8-12. After you select a transaction abend with DB2 information, you can access the Host Variables screen from the DB2 Information menu or by entering **HOSTVAR** as a fast-path command on any Abend-AID for CICS screen.

Figure 8-20. Host Variables Screen

```
 Abend-AID for CICS ----------- Host Variables ----------- Row 000001 of 000001
COMMAND ===>                                                SCROLL ===> CSR
                                                                         ==>
Host variables referenced:

Host Variable Name                Type                          Data
********************************  ***************************   *****************
:WS-FIELDS.WS-SSN                 DECIMAL(009,000)              INVALID PACKED N
****************************** BOTTOM OF DATA ********************************









To display hex AND character, tab to variable data and press Enter
To display full name, tab to Host Variable and press Enter
```

Bind Information Screen

The Bind Information screen, shown in Figure 8-21, displays the package and plan bind information for the abending program. After you select a transaction abend with DB2 information, you can access the Bind Information screen from the DB2 Information menu or by entering **BIND** as a fast-path command on any Abend-AID for CICS screen.

Figure 8-21. Bind Information Variables Screen

```
 Abend-AID for CICS ----------- Bind Information ----------------------------
COMMAND ===>

   Package Bind Information             Plan Bind Information

Location....... DEFAULT             Application Plan Name.. DSC6100P
Collection ID.. AACVCOL             Bind Date............. 29JUN2004
Name........... DSCV6100            Bind Time............. 11:36:39.66
Qualifier...... CWXAAD2             Valid Plan............ YES
Owner.......... CWXAAD2             Isolation............. CURSOR STABILITY
Creator........ CWXAAD2             Acquire............... USE
Create Date.... 29JUN2004           Release............... COMMIT
Create Time.... 11:07:58.32         Validate.............. BIND
Bind Date...... 29JUN2004
Bind Time...... 11:36:37.41
Isolation...... CURSOR STABILITY
Validate....... BIND
Release........ COMMIT
SQL Error...... NOPACKAGE
Valid Package.. YES
Operative...... YES
Current Data... NO
```

Precompile Information Screen

The Precompile Information screen, shown in Figure 8-22, displays information related to the options specified at the precompile for the abending program. After you select a transaction abend with DB2 information, you can access the Precompile Information screen from the DB2 Information menu or by entering **PRECOMP** as a fast-path command on any Abend-AID for CICS screen.

Figure 8-22. Precompile Information Screen

```
 Abend-AID for CICS ------- Precompile Information: -------------------------
COMMAND ===>

Date................... 29JUN2004
Time................... 11:35:37.65
Version................ N/A
Release................ 8.1.0
Host Language.......... COBOL
DEC31.................. NO
SQL Escape............. ' (APOSTSQL)
SQL Decimal............ . (PERIOD)
Mixed Data............. NO
Katakana............... NO

Library Name........... CW.D2.SAMPLES.V8R1M0.DBRM
```

Columns Referenced Screen

The Columns Referenced Screen, shown in Figure 8-23, displays information about the columns referenced in the DB2 request for the abending transaction. After you select a transaction abend with DB2 information, you can access the Columns Referenced screen from the DB2 Information menu or by entering **COLSREF** as a fast-path command on any Abend-AID for CICS screen.

Figure 8-23. Columns Referenced Screen

```
 Abend-AID for CICS --------- Columns Referenced --------- Row 000001 of 000002
COMMAND ===>                                                  SCROLL ===> CSR

Column Name         Table Name          Type
******************  ******************  *************************
EMP_SSN             EMP                 DECIMAL(009,000)
EMP_NAME            EMP                 VARCHAR(00025)
****************************** BOTTOM OF DATA ********************************
```

RCT Detail Screen

The RCT Detail screen, shown in Figure 8-24, displays the Resource Control Table (RCT) information for the abending transaction. You can use the cursor point-and-shoot feature and press Enter at the Transaction ID field to display the Task Detail screen, which is explained in "Task Detail Screen" on page 8-80. Use the cursor point-and-shoot feature and press the HEXD PF key at the RCT Table Address and RCT Entry Address fields to display storage information in hexadecimal format. Abend-AID for CICS displays the Memory Display screen, which is explained in "Memory Display" on page 5-3. After you select a transaction abend with DB2 information, you can access the RCT Detail screen from the DB2 Information menu or by entering **RCTD** as a fast-path command on any Abend-AID for CICS screen.

Figure 8-24. RCT Detail Screen

```
 Abend-AID for CICS -------------- RCT Detail --------------------------------
COMMAND ===>

    Resource Control Table
RCT Suffix........... N                RCT Table Address........ 00544840
Transaction ID....... X302             RCT Entry Address........ 00545970
Plan Name............ DSC5100P
Authorization ID..... CWXAAD2
Authorization(1).....
Authorization(2).....
Authorization(3).....

       Thread Counts
Maximum Number of Threads.... 0001
Number of Active Threads..... 0000
Number of Authorizations..... 00000
Number of Calls............. 2
Number of Commits........... 0
Number of Thread Waits...... 1
Highest Number of Threads.... 0001
Current Number of Threads.... 0001
Thread ID................... PT00
```

Package Dependencies Screen

The Package Dependencies screen, shown in Figure 8-25, displays information about the plan or package dependencies for the abending transaction. After you select a transaction abend with DB2 information, you can access the Package Dependencies screen from the DB2 Information menu or by entering **DEPN** as a fast-path command on any Abend-AID for CICS screen.

Figure 8-25. Package Dependencies Screen

```
 Abend-AID for CICS -------- Package Dependencies -------- Row 000001 of 000008
COMMAND ===>                                                 SCROLL ===> CSR

Object Qualifier     Object Name            Object Type
******************   ********************   ***************
CWXAAD2              VTIME                  VIEW
CWXAAD2              TIME                   TABLE
CWAD2V2G             CWAAD2TS               TABLE SPACE
CWXAAD2              EMP                    TABLE
CWXAAD2              DESC                   TABLE
CWXAAD2              XTIME                  INDEX
CWX0070              XEMP                   INDEX
CWXAAD2              XDESC                  INDEX
****************************** BOTTOM OF DATA ********************************
```

Hogan Information Menu

The Hogan Information menu, shown in Figure 8-26, lets you display an interpretation of the following Hogan control blocks included in the abending transaction:

- Hogan internal task control block as shown in Figure 8-27
- Hogan user task control block as shown in Figure 8-28 on page 8-26
- Hogan user program control block as shown in Figure 8-29 on page 8-26.

After you select a transaction abend with Hogan information, you can access the Hogan Information menu by using the cursor point-and-shoot feature and pressing Enter on the Diagnostic Summary screen or by entering **HOGAN** as a fast-path command on any Abend-AID for CICS screen.

Figure 8-26. Hogan Information Menu

```
 Abend-AID for CICS ---------- Hogan Information ----------------------------
OPTION  ===>

                  1  ITCB     Internal Task Control Block

                  2  UTCB     User Task Control Block

                  3  UPCB     User Program Control Block
```

Figure 8-27. Hogan ITCB Screen

```
 Abend-AID for CICS -------------- Hogan ITCB --------------------------------
COMMAND ===>

Hogan ITCB Address....... 00168914

TCB@NBR................. 362           CDM@ACTN... 0006
TCB@CO.................. 654           CDM@RSLT... 0000
TCB@APPL................ 64            CDM@FMT.... 0000DD1D
TCB@FUNC................ 102           CDM@COID... FFFF
TCB@TYPE................ 3             CDM@EFF.... 01FEB2003
TCB@TIME................ 13:28:24      CDM@ALTK... 00
TCB@DATE................ 19JAN2004     CDM@FLG1... 00
TCB@SRCE................ 6W0A          CDM@UDGA... 0024DCA0
TCB@OPER................               CDM@UDGL... 005F
TCB@ALST................ 0841192C      CDM@FLG2... C0
TCB@ACTR................ 0001
TCB@IND................. 20
TCB@IND2................ 00
```

Figure 8-28. Hogan UTCB Screen

```
 Abend-AID for CICS ------------ Hogan UTCB ---------------------------------
COMMAND ===>

Hogan UTCB Address....... 000C39F4

TCB$NBR................. 362           CDMFACTN... 0005
TCB$CO.................. 654           CDMFRSLT... 0000
TCB$APPL................ 22            CDMFFMT.... 56,605
TCB$FUNC................ 2             CDMFCOID... 654
TCB$TYPE................ 3             CDMFEFF....
TCB$ACT................. 24344         CDMFCCNO... 00000000
TCB$RSLT................ 0000          CDMFSKID...
TCB$DGID................ 63510
TCB$TIME................ 13:28:24
TCB$DATE................ 19JAN2004
TCB$SRCE................ 6W0A
TCB$OPER................
TCB$DEST................
TCB$XACT................ 24344
TCB$XDG................. 63510
```

Figure 8-29. Hogan UPCB Screen

```
 Abend-AID for CICS ------------- Hogan UPCB -------------------------------
COMMAND ===>

Hogan UPCB Address....... 001692A0

UPCBPREV................ 00000000
UPCBNEXT................ 00000000
UPCBFACT................ 00000000
UPCBHACT................ 0000
UPCBPDEF................ 084040DC
UPCBBLL2................ 00000000
UPCBNTGT................ 00000000
UPCBPGMA................ 001C0000
UPCBLACT................ 8019A90C
UPCBACTT................ 00000000
```

After you select one of these screens, access specific storage for the control block in hexadecimal format by using the cursor point-and-shoot feature and pressing the HEXD PF key at the Hogan control block address field. Abend-AID for CICS displays the Memory Display screen, which is explained in "Memory Display" on page 5-3.

DL/I Information Screen

The DL/I Information screen, shown in Figure 8-30, displays DL/I information associated with the task at the time of the abend. After you select a transaction abend with DL/I information, you can access the DL/I Information screen by using the cursor point-and-shoot feature and pressing Enter on the Diagnostic Summary or by entering **DLI** as a fast-path command on any Abend-AID for CICS screen.

Figure 8-30. DL/I Information Screen

```
 Abend-AID for CICS ---------- DL/I Information ---------- Row 000001 of 000018
COMMAND ===>                                                SCROLL ===> PAGE
                                                                         ==>
The last DL/I call parameter list at address 0033AA00 was:

00339EE8 001BC214 00339F04 8033A4EC 00000000  * ..Y .B. ...".u.    *

Name      Address   Length    Resource  Description
********  ********  ********  ********  ****************************************
ISB       000092BC  000000E4            CICS DL/I Interface Scheduling Block
UIB       00339E78  00000010            CICS DL/I User Interface Block
PCB       001BC150  00000030  EMPLYDB   CICS DL/I Pgm Communications Block
JCB       001BC3A4  00000040  EMPLYDB   CICS DL/I Job Control Block
PCB       001BC1B4  0000002C  EMPLSI2   CICS DL/I Pgm Communications Block
JCB       001BC91C  00000040  EMPLSI2   CICS DL/I Job Control Block
PCB       001BC214  0000005E  EMPLYDB   CICS DL/I Pgm Communications Block
JCB       001BCC34  00000040  EMPLYDB   CICS DL/I Job Control Block
PCB       001BC2A8  00000030  EMPLYDB   CICS DL/I Pgm Communications Block
JCB       001BD2D4  00000040  EMPLYDB   CICS DL/I Job Control Block
SCD       00356030  00000040            CICS DL/I System Contents Directory
PST       003BE050  00000B50            CICS DL/I Partition Specification Table
DLP       00133DB0  0000034C            CICS DL/I Interface Parameters
DLILIST   0033AA00  00000010            CICS DL/I Parameter List From Last DL/I
DLIFUNC   00339EE8  00000010            Function Request for the Last DL/I Call
```

To obtain additional DL/I information associated with the transaction at the time of the abend, do the following:

1. Access the address for the DL/I parameter list in hexadecimal format by using the cursor point-and-shoot feature and pressing the HEXD PF key at the address field for the DL/I parameter list. Abend-AID for CICS displays the Memory Display screen, which is explained in “Memory Display” on page 5-3.
2. Access a DL/I control block in hexadecimal format by using the cursor point-and-shoot feature and pressing the HEXD PF key at the Name field or the Address field to display the Memory Display screen, which is explained in “Memory Display” on page 5-3.
3. Access a DL/I control block in DSECT format, if available, by using the cursor point-and-shoot feature and pressing the DSECT PF key at the Name field or the Address field. Abend-AID for CICS displays the DSECT Support screen, which is explained in “Displaying Control Blocks in DSECT Format” on page 6-1.

MSA Information Screen

The MSA Information screen, shown in Figure 8-31, displays MSA information associated with the task at the time of the abend. After you select a transaction abend with MSA information, you can access the MSA Information screen by using the cursor point-and-shoot feature and pressing Enter on the Diagnostic Summary or by entering **MSA** as a fast-path command on any Abend-AID for CICS screen.

Figure 8-31. MSA Information Screen

```
 Abend-AID for CICS ---------- MSA Information ----------- Row 000001 of 000003
COMMAND ===>                                                 SCROLL ===> PAGE

The MSA Data Communications Interface (DCI) release 90.01.00 nucleus
(LPCZZNUC) was present at the time of the abend.


MSA Related Areas

DCIAREA   - Data Communications Interface Area

DCIDMCBS  - Formatted DCI and Application DMCBS

DCITRACE  - Formatted DCI Trace


The last DCI call parameter list was not found.
```

To obtain additional MSA information about the abending transaction, do the following:

1. Use the cursor point-and-shoot feature and press Enter at the DCIAREA (Data Communications Interface Area) field to display the Memory Display screen, which is explained in "Memory Display" on page 5-3.
2. Use the cursor point-and-shoot feature and press Enter at the DCIDMCBS field to display the DCI and Application DMCBS screen, which is explained in "DCI and Application DMCBS Screen" on page 8-29.
3. Use the cursor point-and-shoot feature and press Enter at the DCITRACE field to display the DCI Trace screen, which is explained in "DCI Trace Screen" on page 8-30.
4. Use the cursor point-and-shoot feature and press the HEXD PF key at the address field for the DCI parameter list to display the Memory Display screen, which is explained in "Memory Display" on page 5-3.

DCI and Application DMCBS Screen

The DCI and Application DMCBS screen, shown in Figure 8-32, displays information related to the MSA files. After you select a transaction abend with MSA information, you can access the DCI and Application DMCBS screen by using the cursor point-and-shoot feature and pressing Enter on the MSA Information screen or by entering **DCIDMCBS** as a fast-path command on any Abend-AID for CICS screen.

Figure 8-32. DCI and Application DMCBS Screen

```
 Abend-AID for CICS ----- DCI and Application DMCBS ------ Row 000001 of 000002
COMMAND ===>                                                  SCROLL ===> PAGE


File      File  Previous          Key    Record  Process   Record   I/O Area
Name      Type  DCI Function      Length Length  Indicator Format   Address
********  ****  ****************  ****** ******* ********* *******  ********
LKTWAD    KSDS  GET                     4 6,662             FIXED    00000000
LKSCRN    KSDS  GET                     4 3,938             FIXED    00000000
****************************** BOTTOM OF DATA ********************************
```

To obtain additional information about the MSA files, do the following:

1. Note the file information displayed on the DCI and Application DMCBS screen.
2. Access specific MSA file information by using the cursor point-and-shoot feature and pressing Enter at the File Name field. Abend-AID for CICS displays the File Detail screen, if available.
3. Access specific storage information for the MSA file by using the cursor point-and-shoot feature and pressing the HEXD PF key at the I/O Area Address field. Abend-AID for CICS displays the Memory Display screen, which is explained in “Memory Display” on page 5-3.

DCI Trace Screen

The DCI Trace screen, shown in Figure 8-33, displays the MSA trace interpretations. After you select a transaction abend with MSA information, you can access the DCI Trace screen by using the cursor point-and-shoot feature and pressing Enter on the MSA Information screen or by entering **DCITRACE** as a fast-path command on any Abend-AID for CICS screen.

Figure 8-33. DCI Trace Screen

```
 Abend-AID for CICS ------------- DCI Trace -------------- Row 000001 of 000110
COMMAND ===>                                                 SCROLL ===> PAGE


Program Program  Return   Func Return
Level   Name     Address  Code Code   Description
******* ******** ******** **** ****** ****************************************
        LPCCZTPA 5054207E 28   00     ABEND   3170
        LPCCZTPA 5054207E 31   70     LOAD program  GPO093
        LPCCZTPA 50542138 29   00     DELETE  GPDCC1
        LPCCZTPA 50542138 29   00     DELETE  GPOSERV1
2       LPCZZAIT 004A1408 00   00     LINK to program LPCZZFRE
2       LPCZZAIT 004A1408 00   00     LINK to program LPCZZFRE
2       LPCZZAIT 004A1408 00   00     LINK to program LPCZZFRE
2       LPCZZAIT 004A1408 00   00     LINK to program LPCZZFRE
        LPCCZTPA 50541F9E 34   00     FREEMAIN
2       LPCZZAIT 004A1408 00   00     LINK to program LPCZZTPA
        LPCCVANL 4054275E 00   00     CLOSE
2       LPCZZAIT 004A1408 00   00     LINK to program LPCCVANL
2       LPCZZAIT 004A2F44 00   00     LINK to program LPCZZSVR
2       LPCZZAIT 00496408 00   00     LINK to program LPCZZFRE
2       LPCZZAIT 00496408 00   00     LINK to program LPCZZFRE
2       LPCZZAIT 00496408 00   00     LINK to program LPCZZFRE
2       LPCZZAIT 00496408 00   00     LINK to program LPCZZFRE
        LPCCZTPA 50541F9E 34   00     FREEMAIN
```

To obtain additional information about the MSA trace, do the following:

1. Note the trace information displayed on the DCI Trace screen.
2. Access specific information about the program(s) by using the cursor point-and-shoot feature and pressing Enter at the Program Name field to display the Program Detail screen, which is described in "Program Detail Screen" on page 8-6.
3. Access specific storage information in hexadecimal format by using the cursor point-and-shoot feature and pressing the HEXD PF key at the Return Address field to display the Memory Display screen, which is explained in "Memory Display" on page 5-3.

Chapter 9.
Displaying Additional Transaction Abend Information

This chapter explains how to access additional program and file information related to the transaction abend. The following screens are described:

- Program Information
  - Program Link Information
  - Program Summary Information
- COBOL Storage Areas
  - Working Storage
  - Linkage Section
  - External Cells
  - Task Global Table
  - Local Storage
  - DSA
- PL/I Storage Selection List
- PL/I Storage Display
- PL/I Storage Areas
  - Automatic Storage Areas
  - Static Storage Area
  - Controlled Storage Area
  - External Storage Areas
- Storage Disassembly
- Data Locator Search Criteria
- Data Locator Results
- File Request Summary
  - File Detail
  - Record Image
  - File Related Areas
  - File Recovery
- Web Information Summary
- LE Options Control Block.

Program Information Menu

The Program Information menu, shown in Figure 9-1, lets you access two screens that display program-related information: the Program Link Information screen as described in "Program Link Information Screen" and the Program Summary Information screen, as described in "Program Summary Information Screen" on page 9-4. Access the Program Information menu from the Primary Options menu or by entering **PROG** as a fast-path command on any Abend-AID for CICS screen.

Figure 9-1. Program Information Menu

```
 Abend-AID for CICS --------- Program Information ----------------------------
OPTION  ===>

                    1  PGMLINK  Program Link Information

                    2  PGMSUMM  Program Summary
```

Program Link Information Screen

The Program Link Information screen, shown in Figure 9-2 on page 9-3, summarizes the program execution sequence for every module used by a transaction up to the abending module. Information displayed includes the load modules and programs called, their status (linked, dynamic, or static), and the load modules and programs that originated the calls. A return offset is provided for each program link.

You can access the current search criteria used by the Data Locator facility by tabbing to the FINDDATA field and pressing Enter. The Data Locator Search Criteria screen displays as described in "Data Locator Search Criteria Screen" on page 9-15.

Note: Because they are not *calls*, transfers of program control via XCTL commands are not shown on the Progrm Link Information screen.

Figure 9-2. Program Link Information Screen

```
 Abend-AID for CICS ----- Program Link Information ------ Row 000001 of 000006
COMMAND ===>                                                SCROLL ===> PAGE
                                                                         ==>
To display the current Data Locator search criteria, select FINDDATA

D Program Detail           L Program Listing              S Program Storage
P PPT Entry                A Program Disassembly          R Data Locator

  Called   Called                          Calling  Calling  Return
  Load Mod Program  ------- Status -------  Load Mod Program  Offset
  ******** ******** ********************** ******** ******** ******
_ M370COM8 M370COM8 Linked By              M370COM7 M370COM7 0004AC
_ M370COM7 M370COM7 Linked By              M370COM6 M370COM6 0004AC
_ M370COM6 M370COM6 Linked By              M370COM5 M370COM5 0004AC
_ M370COM5 M370COM5 Linked By              M370COM4 M370COM4 000506
_ M370COM4 M370COM4 Linked By              M370COM3 M370COM3 0004E8
_ M370COM3 M370COM3 Linked By              SYSTEM
  ***************************** BOTTOM OF DATA ******************************




Type a line command and press Enter to process it.
```

Access the Program Link Information screen from the Program Information menu or by entering **PGMLINK** as a fast-path command on any Abend-AID for CICS screen. Enter the following line commands next to the program name in the Called Load Mod field to display additional information about each program:

- **D:** Displays the Program Detail screen, which is described in “Program Detail Screen” on page 8-6.
- **P:** Displays in DSECT format the processing program table (PPT) for the selected module. Refer to “Displaying Control Blocks in DSECT Format” on page 6-1 for additional information.
- **L:** Displays the Program Listing screen, which is described in “Program Listing Screen” on page 8-10. The Program Listing line command is available only for COBOL and PL/I programs compiled with the Compuware COBOL language processor or the Compuware PL/I language processor, which provide source support.
- **A:** Displays the selected program in disassembled format as described in “Storage Disassembly Screen” on page 9-13.
- **S:** Displays all user storage associated with the selected program and all programs still on the active link chain. For Assembler programs, this command displays the Memory Display screen, as described in “Memory Display” on page 5-3. For PL/I programs with source support, this command displays the PL/I Storage Selection List, showing the internal procedures active at the time of the abend, as described in “PL/I Storage Selection List” on page 9-9. For PL/I programs without source support, it displays the PL/I Storage Areas menu, as described in “PL/I Storage Areas Menu” on page 9-10. For COBOL programs, this command displays the COBOL Storage Areas menu, as described in “COBOL Storage Areas Menu” on page 9-5.
- **R:** Displays the Data Locator Results screen, which is described in “Data Locator Results Screen” on page 9-16.

Program Summary Information Screen

The Program Summary Information screen, shown in Figure 9-3, identifies all active modules involved in an abending transaction. Key identification data is summarized for each module used by a transaction up to the abending module. This screen allows you to quickly verify whether the correct version of a module is in use.

You can access the current search criteria used by the Data Locator facility by tabbing to the FINDDATA field and pressing Enter. The Data Locator Search Criteria screen displays as described in "Data Locator Search Criteria Screen" on page 9-15.

Figure 9-3. Program Summary Information Screen

```
 Abend-AID for CICS ---- Program Summary Information ---- Row 000001 of 000007
COMMAND ===>                                                SCROLL ===> PAGE
                                                                         ==>
To display the current Data Locator search criteria, select FINDDATA

D Program Detail           L Program Listing              S Program Storage
P PPT Entry                A Program Disassembly          R Data Locator

  Load              Link      Compile   Entry                             EXEC
  Module   Program  Date      Date      Point    Length Language Type    Key
  ******** ******** ********* ********* ******** ****** ******** ******* ****
_ M370COM8 M370COM8 06FEB2004 06FEB2004 09E06828 000778 COB/MVS  LE/370  USER
_ M370COM7 M370COM7 16JAN2004 16JAN2004 09E05428 000770 COB/MVS  LE/370  USER
_ M370COM6 M370COM6 16JAN2004 16JAN2004 09E04028 000770 COB/MVS  LE/370  USER
_ M370COM5 M370COM5 16JAN2004 16JAN2004 09E02C28 000770 COB/MVS  LE/370  USER
_ M370COM4 M370COM4 16JAN2004 16JAN2004 09E01828 0007C8 COB/MVS  LE/370  USER
_ M370COM3 M370COM3 16JAN2004 16JAN2004 09E00428 0007A8 COB/MVS  LE/370  USER
_ IGZCMGEN IGZCMGEN 24OCT2004 24OCT2004 0A3DD800 0040D0 ASM      COMMAND USER
  ****************************** BOTTOM OF DATA ******************************
```

Access the Program Summary Information screen from the Program Information menu or by entering **PGMSUMM** as a fast-path command on any Abend-AID for CICS screen. Enter the following line commands next to the program name in the Load Module field to display additional information about each program:

- **D:** Displays the Program Detail screen, which is described in "Program Detail Screen" on page 8-6.
- **P:** Displays in DSECT format the processing program table (PPT) for the selected module. Refer to "Displaying Control Blocks in DSECT Format" on page 6-1 for additional information.
- **L:** Displays the Program Listing screen, which is described in "Program Listing Screen" on page 8-10. The Program Listing line command is available only for COBOL and PL/I programs compiled with the Compuware COBOL language processor or the Compuware PL/I language processor, which provide source support.
- **A:** Displays the selected program in disassembled format as described in "Storage Disassembly Screen" on page 9-13.

- **S:** Displays all user storage associated with the selected program and all programs still on the active link chain. For Assembler programs, this command displays the Memory Display screen, as described in "Memory Display" on page 5-3. For PL/I programs with source support, this command displays the PL/I Storage Selection List, showing the internal procedures active at the time of the abend, as described in "PL/I Storage Selection List" on page 9-9. For PL/I programs without source support, it displays the PL/I Storage Areas menu, as described in "PL/I Storage Areas Menu" on page 9-10. For COBOL programs, this command displays the COBOL Storage Areas menu, as described in "COBOL Storage Areas Menu".
- **R:** Displays the Data Locator Results screen, which is described in"Data Locator Results Screen" on page 9-16

COBOL Storage Areas Menu

Note: The screens containing formatted data that are described in this section are available only if the program was compiled with the Compuware COBOL language processor.

Abend-AID for CICS supports the following versions of COBOL:

- Enterprise COBOL Versions for z/OS and OS/390 3.3, 3.2, 3.1
- COBOL for OS/390 and VM Versions 2.2, 2.1
- COBOL for MVS and VM Version 1.2
- COBOL/370
- VS COBOL II Versions 1.4 and less current.

The COBOL Storage Areas menu, shown in Figure 9-4 on page 9-6, lets you access four screens that display all storage and memory information for all supported versions of COBOL programs: the Program Listing screen for working storage as described in "Working Storage" on page 9-6, the Program Listing screen for the Linkage Section as described in "Linkage Section" on page 9-7, the Memory Display for External Cells as described in "External Cells" on page 9-7, and the Memory Display for Task Global Table as described in "Task Global Table" on page 9-7. Further, for COBOL for OS/390 and VM and COBOL for MVS and VM, you can access two additional screens: the Program Listing screen for local storage as described in "Local Storage" on page 9-8 and the Memory Display for DSA as described in "Dynamic Storage Area" on page 9-8.

Access the COBOL Storage Areas menu from the Program Link Information screen or the Program Summary Information screen by entering **S** as a line command next to any COBOL program. You can also access this menu by using the cursor point-and-shoot feature and pressing Enter at the Storage Areas field on the Program Detail screen or by entering **COBOL program-name** as a fast-path command on any Abend-AID for CICS screen.

Figure 9-4. COBOL Storage Areas Menu

```
 Abend-AID for CICS --------- Cobol Storage Areas ---------------------------
COMMAND ===>


Program..... CCAADEMO

                        1  WORK     Working Storage

                        2  LINK     Linkage Section

                        3  EXTRN    External Cells

                        4  TGT      Task Global Table

                        5  LOCAL    Local Storage

                        6  DSA      Dynamic Storage Area
```

Working Storage

The Program Listing screen for working storage, shown in Figure 9-5, displays the Working-Storage Section of the program listing for the selected program. You can scroll up and down throughout the program listing from this screen. In addition to the Working-Storage Section, Abend-AID for CICS displays the Linkage and Local-Storage Sections. Use the cursor point-and-shoot feature and press Enter at any entry in the highlighted value field to display the selected data in vertical-hexadecimal format. Press Enter at the RESET field to display the last abending/last executed statement as the first line. Besides accessing the Program Listing screen for working storage from the Program Detail screen, you can access this screen from the COBOL Storage Areas menu or by entering **WORK program-name** as a fast-path command on any Abend-AID for CICS screen.

Figure 9-5. Program Listing Screen for Working Storage

```
 Abend-AID for CICS ---------- Program Listing ---------- Row 000001 of 000307
COMMAND ===>                                                SCROLL ===> PAGE
                                                                        ==>
To reset display to the abending/last executed statement, select RESET
To reset display to the point of entry into this listing, select ENTRY
Program Listing for CCAADEMO    Compiled 14JUN2004 at 08:09:26

  DATA DIVISION.
  WORKING-STORAGE SECTION.

  77 FILLER                          X(12)               CCAADEMO WS:
  77 PAYMAP1-LEN                     S9(4)    COMP       +80
  77 PAYMAP1A-LEN                    S9(4)    COMP       +1133
  77 PAYMAP2-LEN                     S9(4)    COMP       +800
  77 EMP-REC-LEN                     S9(4)    COMP       +80
  77 EMP-KEY-LEN                     S9(4)    COMP       +5
  77 CURR-PAY                        9(5)V99             0000000
  77 CURR-TAXES                      9(5)V99             0000000
  77 EMP-TBL-SUB                   # S9(3)               00{
  77 SAVE-SUBSCRIPT                # S9(5)    COMP-3     LOW-VALUES
  77 SUBROUTINE-C-OR-D               X(1)                C
  77 DUMMY-LEN                       S9(4)    COMP       +8
```

Linkage Section

The Program Listing screen for the Linkage Section, shown in Figure 9-6, displays the Linkage Section of the program listing for the selected program. You can scroll up and down throughout the program listing from this screen. In addition to the Linkage Section, Abend-AID for CICS displays the Working-Storage and Local-Storage Sections. Use the cursor point-and-shoot feature and press Enter at any entry in the highlighted value field to display the selected data in vertical-hexadecimal format. Press Enter at the RESET field to display the abending/last executed statement as the first line. You can access the linkage section screen from the COBOL Storage Areas menu or by entering **LINK program-name** as a fast-path command on any Abend-AID for CICS screen.

Figure 9-6. Program Listing Screen for Linkage Section

```
 Abend-AID for CICS ---------- Program Listing ---------- Row 000221 of 000307
COMMAND ===>                                                SCROLL ===> PAGE
                                                                         ==>
To reset display to the abending/last executed statement, select RESET
To reset display to the point of entry into this listing, select ENTRY
Program Listing for CCAADEMO    Compiled 14JUN2004 at 08:09:26

  LINKAGE SECTION.
  01 DFHEIBLK
   02 EIBTIME                        S9(7)    COMP-3     +225738
   02 EIBDATE                        S9(7)    COMP-3     +94300
   02 EIBTRNID                       X(4)                AADM
   02 EIBTASKN                       S9(7)    COMP-3     +70
   02 EIBTRMID                       X(4)                S121
   02 DFHEIGDI                       S9(4)    COMP       LOW-VALUES
   02 EIBCPOSN                       S9(4)    COMP       +6
   02 EIBCALEN                       S9(4)    COMP       +1
   02 EIBAID                         X(1)                '
   02 EIBFN                          X(2)              X'0402'
   02 EIBRCODE                       X(6)              X'002000000000'
   02 EIBDS                          X(8)                LOW-VALUES
   02 EIBREQID                       X(8)                LOW-VALUES
   02 EIBRSRCE                       X(8)                S121
```

External Cells

The COBOL base locator external (BLX) cell list is displayed in hexadecimal format on the Memory Display screen, which is explained in “Memory Display” on page 5-3. Access the Memory Display screen for external cells storage from the COBOL Storage Areas menu or by entering **EXTRN program-name** as a fast-path command on any Abend-AID for CICS screen.

Task Global Table

The Task Global Table (TGT) storage is displayed in hexadecimal format on the Memory Display screen, which is explained in “Memory Display” on page 5-3. Access the Memory Display screen for TGT storage from the COBOL Storage Areas menu or by entering **TGT program-name** as a fast-path command on any Abend-AID for CICS screen.

Local Storage

Note: This screen is available for COBOL for OS/390 and VM, and COBOL for MVS and VM programs only.

The Program Listing screen for local storage, shown in Figure 9-7, displays the local storage cells that were allocated to the specified program at the time the abend occurred. You can scroll up and down throughout the program listing from this screen. In addition to the Local-Storage Section, Abend-AID for CICS displays the Working-Storage and Linkage Sections. Use the cursor point-and-shoot feature and press Enter at any entry in the highlighted value field to display the selected data in vertical-hexadecimal format. Press Enter at the RESET field to display the abending/last executed statement as the first line. You can access the local storage screen from the COBOL Storage Areas menu or by entering **LOCL program-name** as a fast-path command on any Abend-AID for CICS screen.

Figure 9-7. Program Listing Screen for Local Storage

```
 Abend-AID for CICS ---------- Program Listing ----------- Row 000104 of 000307
COMMAND ===>                                                SCROLL ===> PAGE
                                                                        ==>
To reset display to the abending/last executed statement, select RESET
To reset display to the point of entry into this listing, select ENTRY
Program Listing for M370F034    Compiled 14JUN2004 at 08:09:26

  LOCAL-STORAGE SECTION.
  01 LS-LITERAL-A00
   02 FILLER                          X(16)             ================
   02 FILLER                          X(16)             LOCAL STOR-A 000
   02 FILLER                          X(16)             ----------------
   02 FILLER                          X(16)             LOCAL STOR-A 001
   02 FILLER                          X(16)             ----------------
   02 FILLER                          X(16)             LOCAL STOR-A 002
   02 FILLER                          X(16)             ----------------
   02 FILLER                          X(16)             LOCAL STOR-A 003
   02 FILLER                          X(16)             ----------------
   02 FILLER                          X(16)             LOCAL STOR-A 004
   02 FILLER                          X(16)             ----------------
   02 FILLER                          X(16)             LOCAL STOR-A 005
   02 FILLER                          X(16)             ----------------
   02 FILLER                          X(16)             LOCAL STOR-A 006
```

Dynamic Storage Area

Note: This screen is available for COBOL for OS/390 and VM, and COBOL for MVS and VM programs only.

The Dynamic Storage Area (DSA) is displayed in hexadecimal format on the Memory Display screen, which is explained in "Memory Display" on page 5-3. Access the Memory Display screen for DSA storage from the COBOL Storage Areas menu or by entering **DSA program-name** as a fast-path command on any Abend-AID for CICS screen.

PL/I Storage Selection List

Note: The screens containing formatted data that are described in this section are available only if the program was compiled with the Compuware PL/I language processor.

Abend-AID for CICS supports the following versions of PL/I:

- Enterprise PL/I Versions for z/OS and OS/390 3.4, 3.3, 3.2, 3.1
- VisualAge PL/I for OS/390 Version 2.2
- PL/I for MVS and VM Version 1.1.1
- AD/Cycle PL/I Version 1.1
- PL/I Version 2.3

Available only with source support enabled, the PL/I Storage Selection List, shown in Figure 9-8, displays the PL/I internal procedures for the selected transaction abend. Each internal procedure entry represents a PL/I library procedure, internal procedure, begin block, or on-unit. Only those active at the time of the failure are shown.

You can display formatted storage, as shown in Figure 9-9 on page 9-10, for an internal procedure entry by entering the **S** line command next to it. Further, you can display the menu for accessing different storage areas for the selected program in hexadecimal format, as shown in Figure 9-10 on page 9-11, by entering the **M** line command next to it.

Access the PL/I Storage Selection List by entering the **S** line command next to a PL/I program on the Program Summary Information or Program Link Information screen, or if source support is enabled, by using the cursor point-and-shoot feature and pressing Enter at the Storage Areas field on the Program Detail screen.

Figure 9-8. PL/I Storage Selection List

```
 Abend-AID for CICS ---- PL/1 Storage Selection List ----- Row 000001 of 000006
COMMAND ===>                                                 SCROLL ===> PAGE

Load module............................ RFDPLI61
CSECT................................... RFDPLI61
External Procedure..................... RFDPLI6

  S Format Storage                      M Storage Areas

  Owning Internal Procedure        Offset       Generation
  *****************************  ********     ********
_ RFDPLI6                          00000008            0
_ BEGIN_BLOCK_AT_OFFSET_000178     00000178            0
_ BEGIN_BLOCK_AT_OFFSET_000270     00000270            0
_ PROCESS_ONE                      0000041C            0
_ PROCESS_TWO                      000005A8            0
_ PROCESS_THREE                    00000690            0
  **************************** BOTTOM OF DATA ********************************
```

PL/I Storage Display

Available only with source support enabled, the PL/I Storage Display, shown in Figure 9-9, displays formatted program storage for the selected internal procedure. Use the cursor point-and-shoot feature and press Enter at a storage field value to display the data in vertical-hexadecimal format.

Access the PL/I Storage Display by entering the **S** line command next to an internal procedure on the PL/I Storage Selection List.

Figure 9-9. PL/I Storage Display

```
 Abend-AID for CICS -------- PL/I Storage Display -------- Row 000001 of 000122
COMMAND ===>                                                SCROLL ===> PAGE
                                                                         ==>
Program storage for RFDPLI61    Compiled 27JUN2004 at 16:54:49
External Procedure Name..... RFDPLI6
Internal Procedure Name..... RFDPLI6                        Generation...    0
Internal Procedure offset... 00000008

Field name, type and description      Field value

 1   DFHCNSTS
     STATIC
  2  DFHLDVER
            CHAR(22)                  LD TABLE DFHEITAB 320.
  2  DFHEIB0
            FIXED BIN(15)             >> LOW-VALUES <<
  2  DFHEID0
            FIXED DEC(7)
  2  DFHEICB
            CHAR(8)                   >> SPACES <<

 DFHEPI
            ENTRY
 DFHEIPTR
```

PL/I Storage Areas Menu

The PL/I Storage Areas menu, shown in Figure 9-10, lets you access various areas of PL/I storage information:

- Automatic storage areas as described in "Automatic Storage Areas" on page 9-11
- Static storage areas as described in "Static Storage Areas" on page 9-12.
- Control storage area as described in "Controlled Storage Area" on page 9-12.
- External storage areas as described in "External Storage Areas" on page 9-13

Access the PL/I Storage Areas menu by entering the **M** line command next to a PL/I internal procedure on the PL/I Storage Selection List, or by using the cursor point-and-shoot feature and pressing Enter at the Storage Areas field on the Program Detail screen if source support is not enabled, or by entering **PLI program-name** as a fast-path command on any Abend-AID for CICS screen.

Note: For VisualAge PL/I and more current versions, the fourth option is not available.

Figure 9-10. PL/I Storage Areas Menu

```
 Abend-AID for CICS --------- PL/I Storage Areas ----------------------------
COMMAND ===>


Program..... RFDPLI61

                        1  AUTO     Automatic Storage Areas

                        2  STATIC   Static Storage Area

                        3  CONTROL  Controlled Storage Area

                        4  EXTERNAL External Storage Areas
```

Automatic Storage Areas

The PL/I Automatic Storage List, shown in Figure 9-11, lists the name, address, length, owning internal procedure name, and generation number of each PL/I automatic storage area allocated while executing the selected program. Automatic storage areas are temporary storage blocks created as the selected program executes. Each automatic storage area represents a PL/I library procedure, internal procedure, begin block, or on-unit. These storage blocks remain allocated until program execution ends in the PL/I block containing the storage declaration. The most current generation of the automatic storage is generation zero.

Access the PL/I Automatic Storage List from the PL/I Storage Areas menu or by entering **AUTO program-name** as a fast-path command on any Abend-AID for CICS screen.

Figure 9-11. PL/I Automatic Storage List

```
 Abend-AID for CICS ---- PL/1 Automatic Storage List ----- Row 000001 of 000006
COMMAND ===>                                                SCROLL ===> PAGE


Automatic storage referenced by program RFDPLI61

Name      Address   Length    Owning Internal Procedure        Generation
********  ********  ********  ******************************   ********
PLIAUT01  0010C7D0  00000198  PROCESS_THREE                           0
PLIAUT02  0010C610  00000198  PROCESS_TWO                             0
PLIAUT03  0010C478  00000198  PROCESS_ONE                             0
PLIAUT04  0010C180  000002F8  BEGIN_BLOCK_AT_OFFSET_000270            0
PLIAUT05  0010B7C0  000009C0  BEGIN_BLOCK_AT_OFFSET_000178            0
PLIAUT06  00107C60  00000700  RFDPLI6                                 0

****************************** BOTTOM OF DATA ********************************
```

After selecting the PL/I Automatic Storage List, access the Memory Display screen for PL/I automatic storage by using the cursor point-and-shoot feature and pressing Enter at the Name field. The Memory Display screen is described in "Memory Display" on page 5-3.

Static Storage Areas

Static storage areas are those storage locations allocated when the selected program is loaded, and which remain allocated until the selected program ends. Static storage areas are displayed in hexadecimal format on the Memory Display screen, which is explained in "Memory Display" on page 5-3. Access the Memory Display screen for static storage areas from the PL/I Storage Areas menu or by entering **STATIC program-name** as a fast-path command on any Abend-AID for CICS screen.

Controlled Storage Area

The PL/I Controlled Storage List, shown in Figure 9-12, lists the name, address, length, pseudo register name, and generation number of each PL/I controlled storage area allocated while executing the selected program. Each controlled storage area represents a PL/I structure that has been declared with the controlled attribute. The controlled attribute allows multiple procedures to access the same PL/I structure. These storage blocks remain allocated until program execution ends in the PL/I block containing the storage declaration. The most current generation of the controlled storage is generation zero.

Access the PL/I Controlled Storage List from the PL/I Storage Areas menu or by entering **CONTROL program-name** as a fast-path command on any Abend-AID for CICS screen.

Figure 9-12. PL/I Controlled Storage List

```
 Abend-AID for CICS ---- PL/1 Controlled Storage List ---- Row 000001 of 000003
COMMAND ===>                                                 SCROLL ===> PAGE


Controlled storage referenced by program RFDPLI61

Name      Address   Length    Pseudo Register Name  Generation
********  ********  ********  ********              ********
CTL 0000  1020D5F8  00002EE0                                 0
CTL 0001  10210528  00000008                                 0
CTL 0002  10210550  00000008                                 0
****************************** BOTTOM OF DATA ********************************
```

After selecting the PL/I Controlled Storage List, access the Memory Display screen for PL/I controlled storage by using the cursor point-and-shoot feature and pressing Enter at the Name field. The Memory Display screen is described in "Memory Display" on page 5-3.

External Storage Areas

Note: This screen is not available for VisualAge PL/I and more current PL/I versions.

The PL/I External Storage List, shown in Figure 9-13, lists the name, address, and length of each PL/I external storage area allocated while executing the selected program. Each external storage area represents a PL/I structure that has been declared with the external attribute. The external attribute allows multiple procedures to access the same PL/I structure.

Access the PL/I External Storage List from the PL/I Storage Areas menu or by entering **EXTERNAL program-name** as a fast-path command on any Abend-AID for CICS screen.

Figure 9-13. PL/I External Storage List

```
 Abend-AID for CICS ----- PL/1 External Storage List ----- Row 000001 of 000003
COMMAND ===>                                                SCROLL ===> PAGE


External storage referenced by program RFDPLI61

Name      Address   Length
********  ********  ********
$EXT13    107029F8  000000C8
$EXT12    10702AC0  000000C8
$EXT11    10702B88  000000C8
****************************** BOTTOM OF DATA ********************************
```

After selecting the PL/I External Storage List, access the Memory Display screen for PL/I external storage by using the cursor point-and-shoot feature and pressing Enter at the Name field. The Memory Display screen is described in “Memory Display” on page 5-3.

Storage Disassembly Screen

The Storage Disassembly screen, shown in Figure 9-14, displays the selected program in disassembled format. To scroll the Storage Disassembly display to a specific offset from offset zero, enter **+offset** or **-offset** in the command field. To reposition the Storage Disassembly to offset zero, enter **RESET** as a primary command. Use the cursor point-and-shoot feature and press Enter at the Address field to display the Memory Display, which is described in “Memory Display” on page 5-3.

Access the Storage Disassembly screen by using the DISASM primary command, which is described in “DISASM” on page 18-10, or by entering **A** as a line command on the Program Link Information or the Program Summary Information screen

Figure 9-14. Storage Disassembly Screen

```
 Abend-AID for CICS --------- Storage Disassembly ----------------------------
COMMAND ===>                                                  SCROLL ===> PAGE

Address   Offset    Object Code      Mnemonic and Operands
00168828  00000000  47F0 F070        B     112(,R15)
0016882C  00000004  23C3             LCDR  R12,R3
0016882E  00000006  C3C1             DATA  CA
00168830  00000008  C1C4             DATA  AD
00168832  0000000A  C5D4             DATA  EM
00168834  0000000C  D640 C3F2 40F1   OC    1010(65,R12),241(R4)
0016883A  00000012  4BF3 4BF2        SH    R15,3058(R3,R4)
0016883E  00000016  40F0 F661        STH   R15,1633(,R15)
00168842  0000001A  F2F9 61F9 F440   PACK  505(16,R6),1088(10,R15)
00168848  00000020  F1F0 4BF5 F14B   MVO   3061(16,R4),331(1,R15)
0016884E  00000026  F1F4 0016 887C   MVO   22(16,R0),2172(5,R8)
00168854  0000002C  60E8 6C0C        STD   R14,3084(R8,R6)
00168858  00000030  0000             DATA
0016885A  00000032  0000             DATA
0016885C  00000034  5080 0308        ST    R8,776
00168860  00000038  0000             DATA
00168862  0000003A  0000             DATA
00168864  0000003C  0900             ISK   R0,0
00168866  0000003E  0000             DATA
00168868  00000040  0080            DATA   "
```

If the registers were captured for a program and you disassemble the program, this screen is displayed. This version of the screen identifies the program, load point, entry point, address of the program's storage, and the contents of the program's registers. The disassembly begins with the abending PSW location if the program is the abending program or, if it is not, with the last call location. In addition, all instruction operands are tab-selectable. Use the cursor point-and-shoot feature and press Enter at an operand in the Object Code field to display the Memory Display for the selected register/offset combination.

Figure 9-15. Alternate Storage Disassembly Screen

```
 Abend-AID for CICS --------- Storage Disassembly ----------------------------
COMMAND ===>                                                  SCROLL ===> PAGE


Program: CSECTTWO  LPA: 08B1C000  EPA: 08B56AB0  Program Storage: 0006C018
0-7 0006C1B6 0006C95C 00068008 000684D4 00063330 00068A68 00068CC4 00068908
8-F 08B57008 00000000 88B1D028 08B56AB0 008B4000 0006C95C 88B56BCE 08B56BD8

 Disassembly begins with abending PSW location.

Address   Offset    Object Code      Mnemonic and Operands
08B56BD0  00000120  08B5             DATA  ..
08B56BD2  00000122  6BD8 0000        SD    R13,0(R8)
08B56BD6  00000126  0000             DATA
08B56BD8  00000128  90EC D00C        STM   R14,R12,12(R13)
08B56BDC  0000012C  4110 D98C        LA    R1,2444(,R13)
08B56BE0  00000130  501D 0008        ST    R1,8(R13)
08B56BE4  00000134  50D1 0004        ST    R13,4(R1)
08B56BE8  00000138  18D1             LR    R13,R1
08B56BEA  0000013A  18BF             LR    R11,R15
08B56BEC  0000013C  47F0 B118        B     280(,R11)
08B56BF0  00000140  0C0C             BASSM R0,R12
08B56BF2  00000142  0C0C             BASSM R0,R12
08B56BF4  00000144  0C0C             BASSM R0,R12
08B56BF6  00000146  0C0C             BASSM R0,R12
```

Data Locator Search Criteria Screen

The Data Locator Search Criteria screen, shown in Figure 9-16, displays the default list of data items that comprise the search criteria for COBOL programs that the Abend-AID for CICS Data Locator facility uses. You can modify this list or use the defaults. The search criteria are unique to each user, and you can save a maximum of 70 at any one time. String criteria are compared against COBOL picture clauses, picture criteria are compared against COBOL picture clauses, and date criteria are compared against field values of the storage contained in the dump.

Enter the corresponding letter for the line command to the left of a data item to execute an Insert, Replicate, or Delete command. Enter **X** in the first column next to a data item you want to exclude from the search. After you've saved your changes, if you want to restore the defaults, enter **DEFAULTS** on the command line. Access the Data Locator Search Criteria screen by pressing Enter at the FINDDATA field on the Data Locator Results, the Program Link Information, or the Program Summary Information screen.

Figure 9-16. Data Locator Search Criteria Screen

```
 Abend-AID for CICS ---- Data Locator Search Criteria ---- Row 000001 of 000013
COMMAND ===>                                                SCROLL ===> PAGE


Enter search criteria below.  A "X" in the first column indicates the entry
is excluded.  To restore defaults, enter DEFAULTS on the command line and
press the enter key.
_______________________________________________________________________________


  I Insert     R Replicate      D Delete

    Type   Substring Name or Data Value
  * ****** ************************************************************
_ _ STRING EIBDATE
_ _ STRING CALENDAR
_ X STRING ANNUAL
_ _ STRING YYMMDD
_ _ STRING MONTH
_ _ STRING JULIAN-DATE
_ X DATE   98000
_ _ DATE   99365
_ _ PICTURE XX
_ _ PICTURE X(4)
_ _ PICTURE 999
_ _ PICTURE 9(3)V99
```

Data Locator Results Screen

The Data Locator Results screen, shown in Figure 9-17, displays the results of a search of a COBOL program. Abend-AID for CICS displays the COBOL storage section definitions matching any of the specified criteria along with the COBOL procedure division statements that reference them. The criteria used in the search are summarized following any matches found.

The search is based on a default list of data items, which you can modify. To display the list of data items, tab to the FINDDATA field and press Enter. The Data Locator Search Criteria screen is displayed, as shown in Figure 9-16. To access the Data Locator Results screen, enter the **R** line command next to a COBOL program on the Program Link Information or Program Summary Information screen.

Figure 9-17. Data Locator Results Screen

```
 Abend-AID for CICS -------- Data Locator Results -------- Row 000001 of 000309
COMMAND ===>                                                SCROLL ===> PAGE
                                                                         ==>
To display the current Data Locator search criteria, select FINDDATA

Program CCAADEMO   Compiled 14JUN2004 at 08:09:26    YEARWINDOW N/A
"#" - Field data does not match PIC   "!" - Field matches DATE criteria
"@" - Field matches PIC criteria


  01 PAYROLL-DATA-EMP001
   02 PAY001-TYPE                    X                N
   02 PAY001-NAME                    X(15)            MR. DAVID ABEND
   02 PAY001-ADDRESS
    03 PAY001-STREET                 X(12)            456 MAIN ST.
    03 PAY001-CITY                   X(8)             HOMETOWN
    03 PAY001-STATE                @ XX               MI
    03 PAY001-ZIP                    X(5)             48010
   02 PAY001-RATE                  @ 9(3)V99          00950
   02 PAY001-DATE-EFF
    03 PAY001-DTEFF-MM             @ XX               01
    03 PAY001-DTEFF-DD             @ XX               01
    03 PAY001-DTEFF-YY             @ XX               84
   02 PAY001-LST-PCT                 9(3)V9           0110
```

File Request Summary

The File Request Summary, shown in Figure 9-18, summarizes key identification data for each file request on the storage chain at the time of the abend. Access the File Request Summary from the Primary Options menu or by entering **FILE** as a fast-path command on any Abend-AID for CICS screen.

Figure 9-18. File Request Summary

```
 Abend-AID for CICS -------- File Request Summary -------- Row 000001 of 000004
COMMAND ===>                                                SCROLL ===> PAGE
                                                                         ==>
S File Detail   R Record Image    F File Areas    I Recovery Information

  File      File    Access Data     Maximum  Key  Remote    Remote
  Name      Type    Method Type     Reclen   Len  Name      System    Dataset N
  ********  ******  ****** ******** *******  ***  ********  ********  *********
_ COLTVSAM  LOCAL   VSAM   VARIABLE      80    5                      CFXSREO.T
_ NEWVSAM   LOCAL   VSAM   VARIABLE      80    5                      CFXSREO.T
_ NONRLS    LOCAL   VSAM   VARIABLE      80    5                      CFXSREO.T
_ MULTTEST  Remote  VSAM   N/A           80    5                      UNKNOWN
  ****************************** BOTTOM OF DATA ******************************
```

Enter the following line commands next to the file name in the File Name field to display additional information about each file request:

- **S:** Displays the File Detail screen, which is described in “File Detail Screens” on page 9-18.
- **R:** Valid for local files only. Displays the Record Image screen, which is described in “Record Image Screen” on page 9-19
- **F:** Displays the File-Related Areas screen, which is described in “File-Related Areas Screen” on page 9-19.
- **I:** Valid for local files only. Displays the File Recovery Information screen, which is described in “File Recovery Information Screen” on page 9-20.

Scroll right to display the dataset name of all open files.

File Detail Screens

The File Detail screens, shown in Figure 9-19 and Figure 9-20, display general file information, statistics, and status about the selected file. In addition, the Local File Detail screen provides access to the Record Image screen. Use the cursor point-and-shoot feature and press Enter at the Record Image field to display the Record Image screen, which is described in "Record Image Screen" on page 9-19.

Access the File Detail screens from the File Request Summary screen or by entering **FILEDET filename** as a fast-path command on any Abend-AID for CICS screen.

Figure 9-19. Local File Detail Screen

```
 Abend-AID for CICS ---------- Local File Detail ----------------------------
COMMAND ===>
File......... COLTVSAM
Dataset Name. CFXSREO.TEST.VSAM
To display the record image for this file, select Record Image

       File Information                           File Status

Access Method........... VSAM            Status 1............ OPENED
Access Type............ KSDS - KEY      Status 2............ ENABLED
Record Length.......... 80              Last File Request... READ/UPDATE
Key Length............. 5
Relative Key Position.. 0
LSR Pool ID............ 1

                            File Statistics

Add....................... 0             Read...................... 0
Browse.................... 0             Update.................... 0
Delete.................... 0
```

Figure 9-20. Remote File Detail Screen

```
 Abend-AID for CICS ---------- Remote File Detail ----------------------------
COMMAND ===>

Local File............... MULTTEST      Access Method............ VSAM
Remote File.............. MULTTEST      Maximum Record Length.... 80
Remote System............ S146          Key Length............... 17

                            File Statistics

Add....................... 0             Read...................... 4
Browse.................... 0             Update.................... 0
Delete.................... 0             Update Browse............ 0
```

Record Image Screen

Available for local files only, the Record Image screen, shown in Figure 9-21, displays the key and record data associated with the selected file request. Use the cursor point-and-shoot feature and press Enter at a storage address to display the selected storage data in vertical hexadecimal format. Access the Record Image screen from the Local File Detail screen or by entering **R** as a line command next to a local file on the File Request Summary screen.

Figure 9-21. Record Image Screen

```
 Abend-AID for CICS ------------ Record Image ----------- Row 000001 of 000015
COMMAND ===>                                                SCROLL ===> PAGE


Record RID at Address 0875A358
 Char  01000
 Zone  FFFFF
Digit  01000
       1...+

Record Data at Address 0875A358

 Char  01000ADAMS          0100010000
 Zone  FFFFFCCCDE4444444444FFFFFFFFFF44444444444444444444444444444444
Digit  0100014142000000000001000100000000000000000000000000000000000
       1...+...10....+...20....+...30....+...40....+...50....+...60

 Char
 Zone  44444444444444444444
Digit  00000000000000000000
      61...+...70....+...80
```

File-Related Areas Screen

The File-Related Areas screen, shown in Figure 9-22, provides access to file-related storage areas for the selected file. Access this screen by entering **F** as a line command on the File Request Summary screen, or by entering **FILEAREA filename** as a fast-path command on any Abend-AID for CICS screen.

Figure 9-22. File-Related Areas Screen

```
 Abend-AID for CICS ---------- File-Related Areas ----------------------------
COMMAND ===>

File......... COLTVSAM
Dataset Name. CFXSRE0.TEST.VSAM

FCT Entry............. 06615530        FFLE................ 06651078
VSWA................... 0661EB40        DSN................. 0661C1C0
RPL.................... 0661EB48        AFCTE............... 0661B0A0
FRTE................... 0664F168
FRAB................... 06645030
```

Use the cursor point-and-shoot feature at a storage address to do the following:

- To display the selected storage data in hexadecimal format, tab to the address and press the HEXD PF key to display the Memory Display screen, which is explained in "Memory Display" on page 5-3.
- If applicable, to display the selected storage data in DSECT format, tab to the address and press the DSECT PF key to display the DSECT Support screen, which is explained in "Displaying Control Blocks in DSECT Format" on page 6-1.

File Recovery Information Screen

Available for local files only, the File Recovery Information screen, shown in Figure 9-23, displays file recovery information for the selected file. Access this screen by entering **I** as a line command next to a local file on the File Request Summary screen, or by entering **FILEREC filename** as a fast-path command on any Abend-AID for CICS screen.

Figure 9-23. File Recovery Information Screen

```
 Abend-AID for CICS ------ File Recovery Information -------------------------
COMMAND ===>

File......... COLTVSAM
Dataset Name. CFXSREO.TEST.VSAM

Journal ID........................... 12
Journal Read Only Operations........ No
Journal Read Update Operations...... No
Journal Write Update Operations..... Yes
Journal Write Add Operations........ Yes
Synchronous Journaling for Reads.... No
Asynchronous Journaling for Writes.. Yes
Backout Logging..................... Yes
Forward Recovery.................... Yes
Forward Recovery Log ID............. 14
Forward Recovery Log Stream......... CFXRFDO.CF40CICS.DFHJ10
```

Web Information Summary Menu

For CICS applications using the CICS Web Interface (CWI), Abend-AID for CICS Release 5.1 or more current provides enhanced diagnostics on the Diagnostic Summary screen, including an analysis of the abend in the application using the CWI, describing an explanation of went wrong with the application using the CWI, what action is taken by CICS, and suggestions to correct the problem.

Using the cursor point-and-shoot feature, from the Diagnostic Summary in the Other Task-Related Areas of Interest section, tab to the CWI field and press Enter to display the Web Information Summary menu, as shown in Figure 9-24 on page 9-22. You can also access this menu directly from the Abend-AID for CICS Primary Options menu by selecting the CWI option or by entering **CWI** as a fast-path command on any Abend-AID for CICS screen.

The Web Information Summary menu provides access to Web-specific information for the abending program using the CWI, including Web request, Web application program, Web attach transaction, Web alias transaction, Web message data, and sockets information.

Figure 9-24. Web Information Summary Menu

```
 Abend-AID for CICS ----- Web Information Summary ------- Row 000001 of 000002
COMMAND ===>                                                SCROLL ===> DATA


The abending transaction CWXN was a Web attach task.




Related Web Information

   1  BRIDGE   3270 Bridge Info        6  SOCKETST Sockets Listener Task

   2  WEBREQ   Web Request             7  SOCKETSD Sockets Data

   3  WEBAPPPG Web Appl Program        8  WEB3270  Web 3270 State Data

   4  WEBATTTR Web Attach Tran         9  WEBDATA  Web Data

   5  WEBALIAS Web Alias Tran          10 DFHWBEP  DFHWBEP Parameters
```

LE Options Control Block Screen

The LE Options Control Block screen, shown in Figure 9-25, displays the Language Environment (LE) options available at the time of a COBOL, PL/I, or Assembler abend. The screen also shows the LE version and from where the LE option was set. Access the LE Options Control Block screen directly from the Primary Options menu or by entering **LEOCB** as a fast-path command on any Abend-AID for CICS screen.

Figure 9-25. LE Options Control Block Screen

```
 Abend-AID for CICS ----- LE Options Control Block ------ Row 000001 of 000060
COMMAND ===>                                                SCROLL ===> PAGE

Options in effect at time of error

OS/390 2.10.0

Option                                                      Set From
*********************************************************  **************
   ABPERC(NONE)                                              CEEDOPT
   ABTERMENC(ABEND)                                          CEEDOPT
 NOAIXBLD                                                    CEEDOPT
   ALL31(OFF)                                                CEEDOPT
   ANYHEAP(16384,8192,ANYWHERE,FREE)                         CEEDOPT
 NOAUTOTASK                                                  CEEDOPT
   BELOWHEAP(8192,4096,FREE)                                 CEEDOPT
   CBLOPTS(ON)                                               CEEDOPT
   CBLPSHPOP(ON)                                             CEEDOPT
   CBLQDA(ON)                                                CEEDOPT
   CHECK(ON)                                                 CEEDOPT
   COUNTRY(US)                                               CEEDOPT
   DEBUG                                                     CEEDOPT
   DEPTHCONDLMT(10)                                          CEEDOPT
 ENVAR("")                                                   CEEDOPT
```

Chapter 10. Managing Source Files

Compuware strongly recommends that you always use source support to make the best use of Abend-AID for CICS. Source support gives you many additional diagnostic benefits such as displaying your actual source code and providing an enhanced program listing with merged data that's easy to read and doesn't require any hexadecimal calculations. To obtain source support for your COBOL and PL/I programs, you need to modify your compile/link-edit JCL to use the Compuware COBOL language processor and the Compuware PL/I language processor. Refer to the *Compuware Shared Services User/Reference Guide* for more information about the COBOL and PL/I language processors.

This chapter describes how to manage source files and source shared directories using the Source Directory screen. From this screen you can display user-defined source datasets, and after you select a transaction abend, you can access the source datasets allocated to the CICS region at the time of the abend. In addition to the Source Directory, the following screens are described:

- Source Program Directory
- Source Dataset Information
- Source Program Browse
- Source Program Information
- Source Mismatch Selection
- Source Program Directory for source mismatch selection.

Source Directory Screen

The Source Directory screen lets you enter a dataset name for a specific source listing or a source shared directory, as shown in Figure 10-3 on page 10-4, or additionally display the source datasets and source shared directories allocated to the CICS region at the time of the transaction abend, as shown in Figure 10-1 on page 10-2. Besides accessing the Source Directory screen directly from the Abend-AID for CICS Primary Options menu, you can access this screen by entering **SD** or **SRCDIR** as a fast-path command on any Abend-AID for CICS screen.

Access the Source Directory screen as described above, noting:

- If you access this screen without first selecting a transaction entry, Abend-AID for CICS displays the Source Directory screen with any user-defined source datasets.
- If you access this screen after selecting a transaction entry, Abend-AID for CICS displays the Source Directory screen with not only any user-defined source datasets but also the source datasets allocated to the CICS region at the time of the abend, as shown in Figure 10-1 on page 10-2. Source datasets are allocated to the CICS region using either an FCT entry or an SLSF001 DD statement, as described in the *Abend-AID for CICS Installation and Customization Guide*.

Figure 10-1. Source Directory Screen with List of User-Defined and CICS Source Datasets

```
 Abend-AID for CICS --------- Source Directory ---------- Row 000001 of 000003
COMMAND ===>                                                SCROLL ===> PAGE
                                                                         ==>
To add a dataset to the list, select Add

S Directory    I Information    X Include/Exclude    D Delete

                                                Exclude   Defined  Remote    Re
  Dataset Name                                  Status    By       Server    Us
  ******************************************  ********  *******  ********  **
_ AACICS.BETA.TEST.PGMLIST                                User     AACSRVR3
_ AACICS.FX.BETA.DEMO.LISTFILE                            User     AACSRVR3
_ AACICS.BETA.QA.SRCE.SHRDIR                              CICS
  ****************************** BOTTOM OF DATA ******************************
```

You can do the following on the Source Directory screen:

- Use the cursor point-and-shoot feature and press Enter at the Add field to display the input window, as shown in Figure 10-3 on page 10-4. Enter a user-defined source dataset name in the Dataset field to add a dataset to the list. All datasets in the list are included in the search that Abend-AID for CICS makes to find the best source listing match unless you explicitly exclude them from the search list.
- Enter **S** at any dataset name to display the Source Program Directory for that dataset.
- Enter **I** at any dataset name to display the Source Dataset Information screen, as shown in Figure 10-2.
- Enter **X** at any user-defined dataset name to include an excluded dataset or to exclude an included dataset from the list of source datasets used in the search for the best match for program source display.
- Enter **D** at any user-defined dataset name to delete the source dataset from the list. Press Enter to confirm or End (PF3) to cancel the deletion.

Notes:

1. *User-defined* datasets are those added by a user. Regardless of the user who added them, any user with READ authority to view the datasets can control their display on the Source Directory for his or her Abend-AID for CICS session by using the X or D line commands. These commands affect only the display of the user-defined source datasets list on the Source Directory for the logged-on user who executes them and do not affect the actual datasets.
2. *CICS* datasets are those included in the CICS JCL or defined by an FCT entry to the CICS region. The X (Include/Exclude) and D (Delete) line commands are *not* valid for these source datasets.

Figure 10-2. Source Dataset Information Screen

```
 Abend-AID for CICS ------ Source Dataset Information ------------------------
COMMAND ===>

Dataset Name................. AACICS.BETA.DEMO.LISTFILE
Volume Serial................ PRD906
Dataset Type................. VSAM
Format Type.................. SOURCE LISTING FILE
Format Sub Type.............. AUTODELETE=DUPS
Block Size................... 4,089
Number of Blocks............. 900
Blocks per Group............. 8
Number of Groups............. 111
Allocated Groups............. 61
Max Extents per Member....... 64
Number of Directory Blocks... 6
Directory Entries per Block.. 18
Length of Directory Entry.... 220
```

Using Distributed Viewing Support

Distributed Viewing Support (DVS) lets you view a CICS transaction abend entry using source support when the source listings for the abending program reside on an MVS system other than the one on which the abend occurred. For example, if you develop applications at a central site and distribute them to other remote sites, DVS eliminates the need to distribute source listing datasets with the applications.

If your site has implemented Distributed Viewing Support (DVS), you can add a user-defined source dataset name for a listing that resides on an MVS system other than the one on which the abend occurred by doing the following:

1. Use the cursor point-and-shoot feature and press Enter at the Add field on the Source Directory (Figure 10-1 on page 10-2) to display the input window, as shown in Figure 10-3 on page 10-4. Enter a user-defined source dataset name in the Dataset field to add a dataset to the list.
2. Specify the name of the Abend-AID for CICS server running on the remote MVS system in the Remote Server field.
3. Specifying a user ID and password in the fields are optional when you're adding the remote dataset to the list of source datasets. However, if you or other users add any remote datasets, whenever you select a transaction entry from the Abend-AID Directory, you're required to enter a valid user ID and password with the appropriate READ authority to access the dataset on the remote MVS system, as shown in the input window in Figure 10-4 on page 10-4.

   If you don't specify a valid user ID and password for the remote dataset displayed in the window, that dataset won't be included in the list of source datasets searched for a source listing corresponding to the transaction program in the selected transaction entry. For security reasons, the user ID and password are not retained from one Abend-AID for CICS session to another. Whenever you log onto the Abend-AID for CICS server, you must enter the user ID and password for each remote dataset in the list that you want to include in the search.

   Instead of entering the user ID and password in the pop-up window shown in Figure 10-4, you can access the Source Directory, press the Right PF key (PF11) to scroll the display to the right, and add your user ID and password in the appropriate corresponding fields for each remote dataset you want to include in the list of source datasets searched for any transaction entries you want to view.

Figure 10-3. Add Source Dataset Window

```
 Abend-AID for CICS --------- Source Directory ---------- Row 000001 of 000003
COMMAND ===>                                                SCROLL ===> PAGE
                                                                         ==>
To add a dataset to the list, select Add
        +-------------------------------------------------------------+
S Direc | Specify source dataset name below                           |
        |                                                             |
        | Dataset ===>AACICS.BETA.TEST2.PGMLIST                       | e    Re
  Datas |                                                             | r    Us
  ***** | If the dataset resides on another MVS system,               | ***  **
  FX.BET| specify the following                                       |
  FX.BET|                                                             |
  FX.BET| Server Name ===>AACSRVR3                                    |
  ***** | Userid      ===>TSOUSER                                     | *******
        | Password    ===>                                            |
        |                                                             |
        | Help=PF01   End=PF03                                        |
        +-------------------------------------------------------------+
```

Figure 10-4. Remote Dataset Access Window

```
 Abend-AID for CICS ------ Abend-AID Directory --------- Row 000001 of 000004
COMMAND ===>                                                SCROLL ===> PAGE
                                                                         ==>
M Menu      L Lock      H Dup History    R Recall      T Terminate Analysis
S Diag      U Unlock    I Information    E Migrate     C Change Priority
D Delete    G Messages  A Analyze        P Print       N Contact Information
          +-------------------------------------------------------------+
  Entry   | Remote Dataset Access                                       | s
  ******* |                                                             | ****
  0000004 | Dataset  ===> AACICS.BETA.TEST2.PGMLIST                     | ETE
  0000003 | Server   ===> AACSRVR3                                      | ETE
  0000002 |                                                             | ETE
  0000001 | Specify userid and password below (omit to exclude dataset) | ETE
  ******* |                                                             | *****
          | Userid   ===> _______                                       |
          | Password ===>                                               |
          |                                                             |
          | Help=PF01   End=PF03                                        |
          +-------------------------------------------------------------+


Type a line command and press Enter to process it
```

4. Alternatively, if you know you don't want to include any of the remote datasets in the search for source listings, access the Source Directory and enter the **X** (Include/Exclude) line command to exclude them. If at a later date you choose to use any of the remote datasets, you can again use the X line command to include them.

5. Further, if you think you won't ever want to include one or more of the remote datasets in the search for source listings, you can use the **D** (Delete) command on the Source Directory to remove the dataset(s) from the list of source datasets. This command removes the dataset from the list of source datasets on the Source Directory for your user ID only and does not perform any function against the dataset itself. If circumstances change and you later want to use the deleted remote dataset, you can add it to the list of source datasets for your Abend-AID for CICS session(s), as explained in steps 1 through 3 above.

Source Program Directory

The Source Program Directory, shown in Figure 10-5, displays the source listings for the selected dataset. Using the available line commands, you can select, lock or unlock, delete, or display additional information for any of the listings. If you want Abend-AID for CICS to automatically restore the mask and sort parameters from your last session on the Source Program Directory, enable this functionality by using the User Profile screen, as described in "User Profile Screen" on page 17-1.

Figure 10-5. Source Program Directory

```
 Abend-AID for CICS ----- Source Program Directory ------ Row 000001 of 000014
COMMAND ===>                                                SCROLL ===> PAGE

Dataset Name..... AACICS.BETA.DEMO.LISTFILE

S Select                  L Lock                         I Information
U Unlock                  D Delete

            Compile   Compile  Return                     Locked    Completion
  Program   Date      Time     Code   Language   Size    Status    Status
  ********  ***************** ****** *********  ******  ********  **********
_ CELPROG1  22JUN2004 10:55:35   4    COBIIR3       63K  LOCKED-M  COMPLETE
_ CCAADEMO  14APR2004 08:09:26   0    COBIIR3      191K  LOCKED-M  COMPLETE
_ CCAADEMO  26MAR2004 13:59:14   8    COBIIR3      159K  LOCKED-M  COMPLETE
_ CCASQLD   08FEB2004 14:45:29   4    OSVSCOB      223K  LOCKED-M  COMPLETE
_ CCASQLD   09OCT2003 14:33:43   4    OSVSCOB      223K  LOCKED-M  COMPLETE
_ CCAADLI   30NOV2002 13:18:58   4    OSVSCOB       63K  LOCKED-M  COMPLETE
_ CCAADLG   30NOV2002 13:17:19   4    OSVSCOB       95K  LOCKED-M  COMPLETE
_ CCAAEIP   20SEP2002 11:50:36   0    COBIIR2       63K  LOCKED-A  COMPLETE
_ CCAMENU   16SEP2002 16:46:17   0    COBIIR2       95K  LOCKED-M  COMPLETE
_ CCAASRA   19APR2002 09:17:13   0    COBIIR2       63K  LOCKED-A  COMPLETE
_ CCAAEIM   19APR2002 08:29:24   0    COBIIR2       63K  LOCKED-M  COMPLETE
_ CCAAEIP   17APR2002 01:50:36   0    COBIIR2       63K  LOCKED-A  COMPLETE
Type a line command and press Enter to process it.
```

Access the Source Program Directory by doing *one* of the following:

- Enter **S** as a line command at any dataset name on the Source Directory screen.
- Use the cursor point-and-shoot feature and press Enter at the entry for the source dataset name field on the Program Detail screen.

Use the available line commands to do the following:

- Enter **S** at any source listing to select it for viewing. Abend-AID for CICS displays the Source Program Browse screen, shown in Figure 10-6 on page 10-6.
- Enter **L** or **U** at any source listing to lock or unlock it. The Locked Status field reflects any change you make with the lock/unlock line commands, indicating the current status. **LOCKED-M** means that the listing was manually locked. **LOCKED-A** indicates that the listing was automatically locked.
- Enter **D** at any source listing to delete it from the source dataset. Press Enter when Abend-AID for CICS displays the Confirm Source Program Delete screen, or press End (PF3) to cancel the deletion.
- Enter **I** at any source listing to display the Source Program Information screen, shown in Figure 10-7.

Figure 10-6. Source Program Browse Screen

```
 Abend-AID for CICS ------- Source Program Browse --------- Row 00543 of 02550
COMMAND ===>                                                SCROLL ===> PAGE
                                                                         ==>
   000407      1                 GO TO 300-EMPLOYEE-PAY-RTN.
   000408                    MOVE '*** EMPLOYEE NOT ON FILE ****' TO PAYPROMPT.
   000409                    GO TO 600-SEND-PAY-MAP.
   000410
   000411               300-EMPLOYEE-PAY-RTN.
   000412                    IF WA-TYPE EQUAL 'N' OR 'I' OR 'S'
   000413      1                 COMPUTE CURR-PAY   EQUAL WA-HOURS * WA-RATE
   000414      1                 COMPUTE CURR-TAXES EQUAL CURR-PAY * WA-TAX-RA
   000415      1                 ADD CURR-PAY   TO WA-YTD-GRS
   000416      1                 ADD CURR-TAXES TO WA-YTD-TAX.
   000417
   000418                    IF PAYEMP1 EQUAL '00001'
   000419      1                 MOVE WORK-AREA TO PAYROLL-DATA-EMP001.
   000420
   000421                    IF PAYEMP1 EQUAL '00999'
   000422      1                 MOVE WORK-AREA TO PAYROLL-DATA-EMP999.
   000423
   000424               400-TRANSACTION-COMPLETE.
   000425                    MOVE PAYEMP1   TO  EMPNUMB.
   000426                    MOVE WA-NAME   TO  EMPNAME.
   000427                    MOVE WA-HOURS  TO  HRSWRKD.
```

Figure 10-7. Source Program Information Screen

```
 Abend-AID for CICS ------ Source Program Information ------------------------
COMMAND ===>                                                SCROLL ===> PAGE


Source Program Name.......... CCAADEMO
Source Compile Date.......... 14JUN2004
Source Compile Time.......... 08:09:26
Source Language.............. COBIIR4
LP Release................... 04.02.00
Return Code.................. 0
Listing Number............... 13
Creation Date................ 14JUN2004
Creation Time................ 08:09:26
Status....................... LOCKED-M
Completion Status............ COMPLETE
Number of Extents............ 6
Allocated Extents
******************************************************************************
   533    534    535    536
****************************** BOTTOM OF DATA *******************************
```

Source Mismatch Selection Screen

The Source Mismatch Selection screen, shown in Figure 10-8, lets you display source processing for a program that does not have an exactly matching source listing. This screen displays the compile date and time, the language and release for the selected program, and the most current version of the source listing.

Figure 10-8. Source Mismatch Selection Screen

```
 Abend-AID for CICS ------ Source Mismatch Selection -------------------------
COMMAND ===>

The program compile date and time does not match a source listing

        Program Information             Most Current Source Information
Program Name............. CCAADEMO      Source Program Name...... CCAADEMO
Compile Date............. 29JUN2004     Source Compile Date...... 10JUL2004
Compile Time............. 10:27:07      Source Compile Time...... 21:28:18
Program Language......... COBOL II      Program Language......... COBOL II
Language Release......... V1R3M0        Language Release......... V1R4M0


         Select one of the following options:
To continue using the most current program listing, select CURRENT
To display available listings for selected program, select LISTINGS
To continue without source-level support, select NO SOURCE
```

You can do *one* of the following:

- Use the cursor point-and-shoot feature and press Enter at the CURRENT field to select the most current source listing for source processing in all subsequent displays of the program.
- Use the cursor point-and-shoot feature and press Enter at the LISTINGS field to display the Source Program Directory for source mismatch selection, which displays every occurrence of a listing for the selected program in all available source listing files, as shown in Figure 10-9 on page 10-8.
- Use the cursor point-and-shoot feature and press Enter at the NO SOURCE field to suppress source processing in all subsequent displays of the program.

If at a later time you want to override your selection regarding source processing for this program, enter the **SOURCE RESET** primary command on any Abend-AID for CICS screen displaying information about this program. The program returns to its previous mismatched condition, and Abend-AID for CICS displays the Source Mismatch Selection screen, from which you can make a different selection.

Source Program Directory for Source Mismatch Selection

The Source Program Directory for source mismatch selection, shown in Figure 10-9, displays every occurrence of a source listing for the selected program. This screen allows you to select the listing that you think is the best match.

Note: Because the language and release may not match the selected program, unpredictable results may occur.

Figure 10-9. Source Program Directory for Source Mismatch Selection

```
 Abend-AID for CICS ----- Source Program Directory ------ Row 000001 of 000008
COMMAND ===>                                                SCROLL ===> PAGE

Program Name... CCAADEMO Compile Date... 29JUN2004  Language....... COBOL II
                         Compile Time... 10:27:07   Language Rel... V1R3M0

S Select                   B Browse                       I Information

            Compile   Compile                              Locked    Completion
  Program   Date      Time     RC Lang  Release  Size    Status    Status
  ********  ********  ******** ** ***** *******  ******  ********  **********
_ CCAADEMO  26MAR2004 13:59:14  8 COBII  V1R3M0    159K            COMPLETE
_ CCAADEMO  29JAN2004 10:51:14  0 COBII  V1R3M0    191K  LOCKED-A  COMPLETE
_ CCAADEMO  29JAN2004 16.18.02  4 COBVS  V1R3M0     95K  LOCKED-A  COMPLETE
_ CCAADEMO  05FEB2003 16.18.02  4 COBVS  V1R1M0     95K  LOCKED-A  COMPLETE
_ CCAADEMO  05FEB2003 16.18.02  4 COBVS  V1R1M0     95K  LOCKED-A  COMPLETE
_ CCAADEMO  05FEB2003 16.18.02  4 COBVS  V1R1M0     95K  LOCKED-A  COMPLETE
_ CCAADEMO  05FEB2003 16.18.02  4 COBVS  V1R1M0     95K  LOCKED-A  COMPLETE
_ CCAADEMO  05FEB2003 18:07:58  0 COBII  V1R4M0     95K  LOCKED-A  COMPLETE
_ CCAADEMO  10FEB2003 21:28:18  4 COBII  V1R3M0    159K  LOCKED-A  COMPLETE
  ****************************** BOTTOM OF DATA ******************************


Type a line command and press Enter to process it.
```

Use the available line commands to do the following:

- Enter **S** at any source listing. Abend-AID for CICS displays with source support the screen you were attempting to access when the Source Mismatch Selection screen was displayed.
- Enter **B** at any source listing to select it for viewing. Abend-AID for CICS displays the Source Program Browse screen, shown in Figure 10-6 on page 10-6.
- Enter **I** at any source listing to display the Source Program Information screen, shown in Figure 10-7 on page 10-6.

After you use one of the line commands, press the END key (PF3) to return to the Source Program Directory. You can select another listing, or press PF3 again to return, depending upon which screen you were originally attempting to view with source support, to either the main menu or to the screen from which the Source Mismatch Selection screen was first displayed.

The selected source listing is available from every applicable subsequent display until you use the SOURCE RESET command, which returns the program to its previous mismatched condition. Abend-AID for CICS displays the Source Mismatch Selection screen, from which you can make another selection.

Chapter 11.
Using Abend-AID for CICS with Language Environment

This chapter describes using Abend-AID for CICS with transactions running under IBM's Language Environment (LE). It also provides some installation information and answers to commonly asked questions. Because this chapter does not duplicate information provided by IBM, refer to the appropriate IBM documentation for more detailed information about LE.

LE Support

Abend-AID for CICS provides two types of support for COBOL programs:

- Basic support for obsolete releases of Language Environment such as LE for MVS and VM Versions 1.4.0 and less current
- Extended support for more recent releases such as LE for MVS and VM Version 1.5.0, and OS/390 Versions 1.2 Language Environment and more current.

The objective of Abend-AID for CICS is to provide the same support for COBOL programs running under Language Environment as for similar COBOL programs not running under LE. This support includes COBOL II programs, which may run either with or without LE; and COBOL for MVS and VM, which requires LE. In addition, selected LE control blocks and areas are shown on the Control Blocks/Storage screen.

LE Information in the Abend-AID for CICS Report

The following areas are displayed on the Abend-AID for CICS Control Blocks/Storage screen for abends executing COBOL programs under Language Environment:

- **CEECAA:** LE common anchor area
- **CEECIB:** LE condition information block
- **CEEMIB:** LE message insert block(s).

The CEECIB contains the message prefix (CEE, IGZ, among others) and message number (for example, 006) for the condition causing the failure. The CEEMIB(s) contain the variable message insert(s) inserted into the message by Language Environment before the message was displayed. The message is normally sent to the CESE transient data queue and is no longer available to Abend-AID for CICS. By referring to the appropriate messages and codes manual and plugging in the values from the CEEMIB(s) displayed by Abend-AID for CICS, users can reconstruct the exact message.

Abend-AID for CICS Processing of Abends

For COBOL software-raised conditions for which LE issues the IGZxxxxS message to the CESE transient data queue, the LE abend code is converted to the appropriate COBOL abend code by adding 1000 to the condition code. For selected codes including 1006, 1007, 1011, 1058, 1074, 1096, the diagnostic information is extracted and shown on the diagnostic screen. For others, a standard description is shown. Diagnostic text has been added for the new abend codes. With LE for MVS and VM Versions 1.5.0 and more current, some errors shown in previous releases of Language Environment cannot occur, so IBM reassigned the message numbers. For these, the correct meaning is shown dependent upon the LE release.

For Language Environment abends for which LE issues the CEExxxxS message, the message number is used as the abend code, and the diagnostic displays the appropriate text.

For COBOL for MVS and VM, the Local Storage and Dynamic Storage Area (DSA) are dumped out and are selectable for the COBOL Storage Areas menu. Source support is available for the Local Storage Section. The DSA and Local Storage cells are shown on the Control Blocks/Storage screen.

Chapter 12. Analyzing Data Exceptions

This chapter describes how to use the CCAADEMO demonstration program shipped on the Abend-AID for CICS product tape to create an S0C7 data exception and how to use Abend-AID for CICS to solve the transaction abend.

Analyzing a Sample S0C7 Data Exception

The sample S0C7 data exception shown in this chapter was produced from the COBOL demonstration program CCAADEMO provided on the Abend-AID for CICS product tape in the installation sample library (TKFXSAMP). You can create this abend yourself, executing the AADM transaction to produce an ASRA abend, provided the appropriate CICS table entries are defined as described in the *Abend-AID for CICS Installation and Customization Guide*.

The program in this chapter includes source support. **Compuware strongly recommends that you always use source support to make the best use of Abend-AID for CICS.** To include source support, compile CCAADEMO with compile/link-edit JCL modified to use the Compuware COBOL language processor. Refer to the *Compuware Shared Services User/Reference Guide* for information about the COBOL language processor.

Further, you can also use the supplied PL/I demonstration program CCAADEMP in the installation sample library (TKFXSAMP) and follow a similar procedure. If the appropriate CICS table entries have been made, you can execute the AADP transaction to produce an abend. To include source support, compile CCAADEMP with compile/link-edit JCL modified to use the Compuware PL/I language processor. Refer to the *Compuware Shared Services User/Reference Guide* for information about the PL/I language processor.

As an alternative to using CCAADEMO/CCAADEMP, you can create your own transaction report and follow along using the procedure described below.

The following steps describe a possible approach to solving a data exception. Abend-AID for CICS provides a great deal of information related to the abend that may be of interest to you in your analysis, and not all relevant screens are discussed in this approach.

Note: Performing these steps requires some familiarity with the Abend-AID for CICS analysis functions and screen navigation facilities. For illustration purposes, this approach shows one screen access method per screen, but most screens have more than one valid access method. Refer to “Screen Access” on page 3-6.

1. Select the Diagnostic Summary for this S0C7 data exception, as shown in Figure 12-1 on page 12-2 through Figure 12-5 on page 12-4. Note the following information about this abend:
   - Program name as shown in Figure 12-1 on page 12-2
   - Abending statement, its statement number, and paragraph name as shown in Figure 12-1 on page 12-2
   - Field in error, its picture length and type, and the field’s value as shown in Figure 12-2 on page 12-2
   - Next sequential instruction as shown in Figure 12-2 on page 12-2
   - Program’s compile date and time as shown in Figure 12-3 on page 12-3

– Last EXEC CICS command and its statement number as shown in Figure 12-3 on page 12-3 and Figure 12-4 on page 12-3

– PSW and SCREEN fields as shown in Figure 12-5 on page 12-4.

Figure 12-1. Diagnostic Summary, Page 1

```
 Abend-AID for CICS --------- Diagnostic Summary --------- Row 000001 of 000073
COMMAND ===>                                                SCROLL ===> PAGE


An ASRA abend occurred in program CCAADEMO.  The abending transaction was
AADM running at terminal A494 for user ID CICSUSER.


Analysis of the abend:

The Data Exception is caused when a decimal instruction is attempted on a
field that does not contain valid packed data, eg. contains an invalid digit
(not 0-9), or its last byte contains an invalid sign (Not F, C, OR D).



The abending statement is:

000400                   COMPUTE CURR-PAY   EQUAL WA-HOURS * WA-RATE

This statement is contained in paragraph "300-EMPLOYEE-PAY-RTN" of program
CCAADEMO.

                              COBOL Information
```

Figure 12-2. Diagnostic Summary, Page 2

```
 Abend-AID for CICS --------- Diagnostic Summary --------- Row 000020 of 000073
COMMAND ===>                                                SCROLL ===> PAGE


                              COBOL Information

     Current fields on abending statement:

Level/Field Name                     Picture/Type     Value
 77 CURR-PAY                         9(5)V99             0000000
 02 WA-HOURS                       # 999                 ***
 02 WA-RATE                          9(3)V99             00950

        '#' - Indicates field contains invalid data



Next Sequential Instruction

The next statement is:

000401                   COMPUTE CURR-TAXES EQUAL CURR-PAY * WA-TAX-RATE

This statement is contained in paragraph "300-EMPLOYEE-PAY-RTN" of program
CCAADEMO.
```

Figure 12-3. Diagnostic Summary, Page 3

```
 Abend-AID for CICS --------- Diagnostic Summary --------- Row 000038 of 000073
COMMAND ===>                                                  SCROLL ===> PAGE


Next Sequential Instruction

The program was compiled on 29JUN2004 at 10:51:14 and is 0017B0 bytes long.
It is part of load module CCAADEMO which was loaded from
CW.CC.DEMO.PGMLOAD. It was link edited on 29JUN2004. The load module is
001C20 bytes long.  The program AMODE was 31 .  The program RMODE was 24 .

The execution key for this program was USER_KEY.

Last Call or EXEC CICS Request

The last call or 'EXEC CICS' command was:

000369         *EXEC CICS RECEIVE
000370         *          INTO   (DUMMY-EMP)
000371         *          LENGTH (DUMMY-LEN)
000372         *END-EXEC.
000373               MOVE '..{ .   .      00282   ' TO DFHEIV0
000374              CALL 'DFHEI1' USING DFHEIV0  DUMMY-EMP DUMMY-LEN.
```

Figure 12-4. Diagnostic Summary, Page 4

```
 Abend-AID for CICS --------- Diagnostic Summary --------- Row 000057 of 000073
COMMAND ===>                                                  SCROLL ===> PAGE


Last Call or EXEC CICS Request

This statement is contained in paragraph "200-RECEIVE-INPUT" of program
CCAADEMO.

Program Link Summary

Called    Called    ------- Status -------  Calling   Calling   Return
Load Mod  Program                           Load Mod  Program   Offset
CCAADEMO  CCAADEMO  Linked By               SYSTEM              000000


Other Task-Related Areas of Interest:
DATASTRM -  Data Stream Analysis
EIB      -  User Execute Interface Block
```

Figure 12-5. Diagnostic Summary, Page 5

```
 Abend-AID for CICS --------- Diagnostic Summary --------- Row 000070 of 000073
COMMAND ===>                                                SCROLL ===> PAGE


Other Task-Related Areas of Interest:
PSW      -  Program Status Word
REGS     -  Registers  SCREEN   -  Last 3270 Screen
TRACE    -  CICS Trace
```

2. Use the cursor point-and-shoot feature and press Enter at the value for the field in error, WA-HOURS, as shown in Figure 12-2 on page 12-2. Abend-AID for CICS displays the Expanded Data Field screen as shown in Figure 12-6. This screen displays the selected data in vertical-hexadecimal format.

Figure 12-6. Expanded Data Field Screen

```
 Abend-AID for CICS -------- Expanded Data Field --------- Row 000001 of 000006
COMMAND ===>                                                SCROLL ===> PAGE


Field Name:             02 WA-HOURS                       # 999

0875A3E4   Char  ***
           Zone  555
          Digit  CCC
                 1..
```

3. Press the END PF key to return to the Diagnostic Summary. Use the cursor point-and-shoot feature and press Enter at the PSW field, as shown in Figure 12-4 on page 12-3. Abend-AID for CICS displays the PSW Information screen as shown in Figure 12-7 on page 12-5. This screen displays the actual abending assembler instruction issued for the COBOL compute statement and identifies it as a multiply decimal instruction. The first operand of the instruction is the packed decimal format of WA-HOURS, which is 000000CCCF in hexadecimal storage.

Figure 12-7. PSW Information Screen

```
 Abend-AID for CICS ---------- PSW Information ----------- Row 000001 of 000018
COMMAND ===>                                                  SCROLL ===> PAGE


To display Registers at abend, select REGS

Program Status Word at Time of Abend         Program Information

PSW................. 078D1000 801695A0
Instruction Length.. 0006                    Program..CCAADEMO
Interrupt Code...... 0007                    Offset...000D72
Description......... Multiply Decimal

Address   Instruction      Opcode  D1(L1,B1),D2(L2,B2)
0016959A  FC42 D1B0 D1B8   MP      432(5,13),440(3,13)

The first operand was located at address 08A481E0 and contained -

000000CC CF        *   ..   *


The second operand was located at address 08A481E8 and contained -

00950F    * n. *
```

Note: To accomplish the COBOL compute statement, a series of assembler instructions are executed:

a. The two fields to be computed are converted to packed-decimal format.

b. The sign of the number for each field is set.

c. The multiply packed instruction is executed.

d. The result of the multiplication is changed to a character format and the sign code is eliminated, as shown in Figure 12-11 on page 12-7.

4. If you compile your program with the PMAP compiler option for OS/VS COBOL or the LIST compiler option for VS COBOL II, a section of the output in the source listing displays the equivalent assembler instructions of a COBOL program. To view the statement in error from the PMAP/LIST of the source listing, access the entire program listing via the Source Directory. You can access the Source Directory in several alternate ways:

   – Enter the fast-path command **SRCDIR**.

   – Enter the **=R** jump command.

   – Select it directly from the Primary Options menu.

   – Return to the Diagnostic Summary and follow the sequence described below.

5. Press the END PF key to return to the Diagnostic Summary screen. Use the cursor point-and-shoot feature and press Enter at the program name field, **CCAADEMO**. Abend-AID for CICS displays the Program Detail screen, as shown in Figure 12-8 on page 12-6.

Figure 12-8. Program Detail Screen

```
 Abend-AID for CICS ------------ Program Detail -----------------------------
COMMAND ===>

Program CCAADEMO is part of load module CCAADEMO which was loaded from
CW.CC.DEMO.PGMLOAD
Source was loaded from dataset CWV.CC.DEMO.LISTFILE
To display the source listing for this program, select Listing
To display Cobol storage areas for this program, select Storage Areas

                   Program Information and Program-Related Areas
Compile Date............. 29JUN2004     PPT Entry................ 08302928
Compile Time............. 10:51:14      Commarea................. 08330018
Link Date................ 29JUN2004     Entry Point Address...... 00168828
Source Compile Date...... 29JUN2004     Savearea................. 08A48030
Source Compile Time...... 10:51:14      BREXIT................... N
Program Size............. 000017B0
Program Rmode............ 24
Program Amode............ 31

                              Language Information
CICS Type................ COMMAND        EXECkey.................. USER
Language................. COBOL II       Data above 16meg?........ N
LE/370 Enabled?.......... N
```

6. Use the cursor point-and-shoot feature and press Enter at the source dataset name field on the Program Detail screen. Abend-AID for CICS displays the Source Program Directory, as shown in Figure 12-9.

Figure 12-9. Source Program Directory

```
 Abend-AID for CICS ------ Source Program Directory ------ Row 000001 of 000014
COMMAND ===>                                                 SCROLL ===> PAGE

Data Set Name.... CWV.CC.DEMO.LISTFILE

S Select                  L Lock                        I Information
U Unlock                  D Delete

            Compile   Compile  Return                     Locked    Completion
  Program   Date      Time     Code   Language   Size    Status    Status
  ********  ********  ******** ****** ********** ******  ********  **********
_ CELPROG1  06FEB2004 10:55:35   4    COBIIR3       63K  LOCKED-M  INCOMPLETE
_ CCAADEMO  29JAN2004 10:51:14   0    COBIIR3      191K  LOCKED-M  COMPLETE
_ CCAADEMO  26JAN2004 13:59:14   8    COBIIR3      159K  LOCKED-M  COMPLETE
_ CCASQLD   08DEC2003 14.45.29   4    OSVSCOB      223K  LOCKED-M  COMPLETE
_ CCASQLD   30NOV2003 14.33.43   4    OSVSCOB      223K  LOCKED-M  COMPLETE
_ CCAADLI   30NOV2003 13.18.58   4    OSVSCOB       63K  LOCKED-M  COMPLETE
_ CCAADLG   30NOV2003 13.17.19   4    OSVSCOB       95K  LOCKED-M  COMPLETE
_ CCAASMB   11AUG2003 15.41.12   0    ASMH          63K  LOCKED-M  COMPLETE
_ CCAAEIP   24APR2003 11.50.36   0    COBIIR2       63K  LOCKED-A  COMPLETE
_ CCAMENU   23APR2003 16.46.17   0    COBIIR2       95K  LOCKED-M  COMPLETE
_ CCAASRA   19APR2003  9.17.13   0    COBIIR2       63K  LOCKED-A  COMPLETE
_ CCAAEIM   18APR2003 11.52.24   0    COBIIR2       63K  LOCKED_A  COMPLETE
Type a line command and press Enter to process it.
```

7. Enter the **S** line command at the Program field of the source listing for the abending program. Be sure to select the source listing whose name and date most closely match the program name and compile date shown in the Diagnostic Summary. Abend-AID for CICS displays the Source Program Browse screen, as shown in Figure 12-10 on page 12-7.

Figure 12-10. Source Program Browse Screen

```
 Abend-AID for CICS ------- Source Program Browse ------- Row 000001 of 002893
COMMAND ===>                                                SCROLL ===> DATA
                                                                         ==>
                                COMPUWARE COBOL PROCESSOR*COMPUWARE COBOL PROCE
                                COMPUWARE COBOL PROCESSOR*COMPUWARE COBOL PROCE
                                COMPUWARE COBOL PROCESSOR*COMPUWARE COBOL PROCE
                                COMPUWARE COBOL PROCESSOR*COMPUWARE COBOL PROCE
                                COMPUWARE COBOL PROCESSOR*COMPUWARE COBOL PROCE
                                COMPUWARE COBOL PROCESSOR*COMPUWARE COBOL PROCE
                                COMPUWARE COBOL PROCESSOR*COMPUWARE COBOL PROC*
                                COMPUWARE COBOL PROCESSOR*COMPUWARE COBOL PRO*
                                COMPUWARE COBOL PROCESSOR*COMPUWARE COBOL PR*
                                COMPUWARE COBOL PROCESSOR*COMPUWARE COBOL P*
                                COMPUWARE COBOL PROCESSOR*COMPUWARE COBOL *   *
                                COMPUWARE COBOL PROCESSOR*COMPUWARE COBOL******


                                                     RELEASE 07.09.00 (05/16/


                                     COPYRIGHT (C) 1984, 1998, COMPUWARE CORPOR
                                     RIGHTS RESERVED UNDER THE COPYRIGHT LAWS O

                              * *   P O S T - P R O C E S S O R   O P T I O N S
```

8. Enter the **FIND '000400 COMPUTE'** primary command to locate the statement in error from the PMAP/LIST of the source listing. Enter two spaces between '000400' and 'COMPUTE' to find this exact text string, as shown in Figure 12-11. Note the assembler instructions for the COBOL compute statement—in particular, the multiply packed (MP) instruction, which was identified as the statement in error on the PSW screen, as shown in Figure 12-7 on page 12-5.

Figure 12-11. Source Program Browse Screen — COMPUTE Statement in Error

```
 Abend-AID for CICS ------- Source Program Browse ------- Row 001838 of 002295
COMMAND ===>                                                SCROLL ===> PAGE
                                                                         ==>
 000399  IF
     000D46  95D5 A160                CLI  352(10),X'D5'           WA-TYPE
     000D4A  4780 B66A                BC   8,1642(0,11)            GN=11(000D5E)
     000D4E  95C9 A160                CLI  352(10),X'C9'           WA-TYPE
     000D52  4780 B66A                BC   8,1642(0,11)            GN=11(000D5E)
     000D56  95E2 A160                CLI  352(10),X'E2'           WA-TYPE
     000D5A  4770 B6FC                BC   7,1788(0,11)            GN=10(000DF0)
     000D5E                 GN=11     EQU  *
 000400  COMPUTE
     000D5E  F242 D1B0 A1AC           PACK 432(5,13),428(3,10)     TS2=0
     000D64  960F D1B4                OI   436(13),X'0F'           TS2=4
     000D68  F224 D1B8 A18B           PACK 440(3,13),395(5,10)     TS2=8
     000D6E  960F D1BA                OI   442(13),X'0F'           TS2=10
     000D72  FC42 D1B0 D1B8           MP   432(5,13),440(3,13)     TS2=0
     000D78  F363 A038 D1B1           UNPK 56(7,10),433(4,13)      CURR-PAY
     000D7E  96F0 A03E                OI   62(10),X'F0'            CURR-PAY+6
 000401  COMPUTE
     000D82  F266 D1B0 A038           PACK 432(7,13),56(7,10)      TS2=0
     000D88  960F D1B6                OI   438(13),X'0F'           TS2=6
     000D8C  F223 D1B8 A19A           PACK 440(3,13),410(4,10)     TS2=8
     000D92  960F D1BA                OI   442(13),X'0F'           TS2=10
```

9. Next, to determine how the invalid data was placed in the WA-HOURS field, go to the Last 3270 Screen Image. Looking at the last screen image before the abend can help in determining the program flow to the abend. Repeatedly press the END PF key until you return to the Diagnostic Summary. Use the cursor point-and-shoot feature and press Enter at the SCREEN field, shown in Figure 12-4 on page 12-3. Abend-AID for CICS displays the Last 3270 Screen Image, as shown in Figure 12-12. Note that 00001 was entered as the employee number when the abend occurred.

Figure 12-12. Last 3270 Screen Image

```
AADM 00001 - ENTER EMPLOYEE NUMBER

  *** COMPUWARE CORPORATION ***
    DEMONSTRATION TRANSACTION

  ENTER DESIRED EMPLOYEE ABOVE:
  00001 - CAUSES ASRA ABEND
  00002 - CAUSES AEIM
  00003 - CAUSES AEIP
  00004 - CAUSES DB2 IVP
  00999 - ENDS NORMALLY
```

10. Press the END PF key to return to the Diagnostic Summary screen. Use the UP PF key to scroll to the field that contains invalid data, 02 WA-HOURS. Use the cursor point-and-shoot feature and press Enter at this field to display working storage for this program. The Program Listing screen, as shown in Figure 12-13 on page 12-9, displays the Working-Storage Section, Linkage Section, and Procedure Division for the abending program. You can scroll throughout the sections using the PF keys. Further, you can search for specific data or text strings using the FIND primary command.

Figure 12-13. Program Listing Screen — Working Storage — Field in Error

```
 Abend-AID for CICS ---------- Program Listing ---------- Row 000078 of 000307
COMMAND ===>                                                SCROLL ===> PAGE
                                                                         ==>
To reset display to the abending/last executed statement, select RESET
To reset display to the point of entry into this listing, select ENTRY
Program Listing for CCAADEMO    Compiled 29JUN2003 at 10:51:14


 02 WA-HOURS                      # 999                 ***
 02 WA-MSG                          X(26)               SPACES
01 VSAM-EMP-RECORD
 02 EMP-NUM-KEY                     X(5)                LOW-VALUES
 02 EMP-NAME                        X(15)               LOW-VALUES
 02 EMP-HOURS                     # 999                 LOW-VALUES
 02 EMP-TOTPAY                    # 9(5)V99             LOW-VALUES
 02 FILLER                          X(50)             X'00000E040404400000
01 EMP-RECORD-TABLE
 02 EMP-RECORD-TBL
  03 EMP-NUM-KEY-TBL (1  )          X(5)                SPACES
  03 EMP-NAME-TBL (1  )             X(15)                  1107302C03C0
  03 EMP-HOURS-TBL (1  )         # 999                  F04
  03 EMP-TOTPAY-TBL (1  )        # 9(5)V99              1F242F5
 02 EMP-RECORD-TBL (2  )
  03 EMP-NUM-KEY-TBL (2  )          X(5)
```

11. Use the UP PF key to scroll to the 01 level or group name, WORK-AREA, for the field in error, as shown in Figure 12-14. Note that WA-HOURS is the second to last field under group name WORK-AREA, as shown in the previous Figure 12-13 on page 12-9.

Figure 12-14. Program Listing Screen — Working Storage — Group Name for Field in Error

```
 Abend-AID for CICS --------- Program Listing ----------- Row 000055 of 000307
COMMAND ===>                                                SCROLL ===> PAGE
                                                                         ==>
To reset display to the abending/last executed statement, select RESET
To reset display to the point of entry into this listing, select ENTRY
Program Listing for CCAADEMO    Compiled 29JUN2003 at 10:51:14


01 WORK-AREA
 02 WA-TYPE                         X                   N
 02 WA-NAME                         X(15)               MR. DAVID ABEND
 02 WA-ADDRESS
  03 WA-STREET                      X(12)               456 MAIN ST.
  03 WA-CITY                        X(8)                HOMETOWN
  03 WA-STATE                       XX                  MI
  03 WA-ZIP                         X(5)                48010
 02 WA-RATE                         9(3)V99             00950
 02 WA-DATE-EFF
  03 WA-DTEFF-MM                    XX                  01
  03 WA-DTEFF-DD                    XX                  01
  03 WA-DTEFF-YY                    XX                  84
 02 WA-LST-PCT                      9(3)V9              0110
 02 WA-TAX-RAT                      9(3)V9              0200
 02 WA-YTD-GRS                    # S9(5)V99            150000{
```

12. Next, press Enter at the RESET field to display the Procedure Division of the program with the cursor positioned at the abending statement, as shown in Figure 12-15.

Figure 12-15. Program Listing — Abending Statement

```
 Abend-AID for CICS --------- Program Listing ----------- Row 000070 of 000287
COMMAND ===>                                                SCROLL ===> PAGE
                                                                         ==>
To reset display to the abending/last executed statement, select RESET
To reset display to the point of entry into this listing, select ENTRY
Program Listing for CCAADEMO    Compiled 29JUN2003 at 10:51:14


000400                  COMPUTE CURR-PAY   EQUAL WA-HOURS * WA-RATE
000401                  COMPUTE CURR-TAXES EQUAL CURR-PAY * WA-TAX-RAT
000402                  ADD CURR-PAY   TO WA-YTD-GRS
000403                  ADD CURR-TAXES TO WA-YTD-TAX.
000404
000405             IF PAYEMP1 EQUAL '00001'
000406                  MOVE WORK-AREA TO PAYROLL-DATA-EMP001.
000407
000408             IF PAYEMP1 EQUAL '00999'
000409                  MOVE WORK-AREA TO PAYROLL-DATA-EMP999.
000410
000411         400-TRANSACTION-COMPLETE.
000412             MOVE PAYEMP1   TO  EMPNUMB.
000413             MOVE WA-NAME   TO  EMPNAME.
000414             MOVE WA-HOURS  TO  HRSWRKD.
```

13. Because the Diagnostic Summary, as shown in Figure 12-3 on page 12-3, indicates that the last EXEC CICS command begins at statement number 000369, use the UP PF key to scroll up to that statement. Because the Last 3270 Screen Image indicates that 00001 was entered as the employee number and because the Diagnostic Summary indicates that the abending statement is contained in 300-EMPLOYEE-PAY-RTN, you can conclude that statement numbers 378 through 380 are the previous instructions executed prior to the abending statement, as shown in Figure 12-16. The invalid data in the WA-HOURS field, which is part of the WORK-AREA group name, was placed there by the MOVE statement, 379. This MOVE statement placed data located in the group name PAYROLL-DATA-EMP001 into the group name WORK-AREA.

Figure 12-16. Program Listing — Last EXEC CICS Command

```
 Abend-AID for CICS --------- Program Listing ----------- Row 000070 of 000287
COMMAND ===> f payroll-data-emp001                          SCROLL ===> PAGE
                                                                        ==>
To reset display to the abending/last executed statement, select RESET
To reset display to the point of entry into this listing, select ENTRY
Program Listing for CCAADEMO    Compiled 29JUN2003 at 10:51:14


000369        *EXEC CICS RECEIVE
000370        *          INTO   (DUMMY-EMP)
000371        *          LENGTH (DUMMY-LEN)
000372        *END-EXEC.
000373              MOVE '........... ...00282   ' TO DFHEIV0
000374             CALL 'DFHEI1' USING DFHEIV0  DUMMY-EMP DUMMY-LEN.
000375
000376
000377             MOVE DUMMY-PAYEMP1 TO PAYEMP1.
000378             IF PAYEMP1 EQUAL '00001'
000379                  MOVE PAYROLL-DATA-EMP001 TO WORK-AREA
000380                  GO TO 300-EMPLOYEE-PAY-RTN.
000381        *EXEC CICS HANDLE CONDITION DSIDERR(NOT-FOUND)
000382        *                           NOTOPEN(NOT-OPEN)
000383        *END-EXEC.
```

14. Next, enter the **FIND PAYROLL-DATA-EMP001** primary command to locate this group name, as shown in Figure 12-17.

Figure 12-17. Program Listing Screen — Working Storage — Group Name

```
 Abend-AID for CICS --------- Program Listing ----------- Row 000017 of 000307
COMMAND ===>                                                SCROLL ===> PAGE
                                                                        ==>
To reset display to the abending/last executed statement, select RESET
To reset display to the point of entry into this listing, select ENTRY
Program Listing for CCAADEMO    Compiled 29JUN2003 at 10:51:14


 02 FILLER                          S9(1)    COMP-3   +8
 02 FILLER                          X                 LOW-VALUES
01 WS-130                           S9(3)    COMP-3   +130
01 WS-130-X                         REDEFINES WS-130
 02 WS-13                           X               X'13'
 02 WS-0C                           X               X'0C'

01 PAYROLL-DATA-EMP001
 02 PAY001-TYPE                     X                N
 02 PAY001-NAME                     X(15)            MR. DAVID ABEND
 02 PAY001-ADDRESS
  03 PAY001-STREET                  X(12)            456 MAIN ST.
  03 PAY001-CITY                    X(8)             HOMETOWN
  03 PAY001-STATE                   XX               MI
  03 PAY001-ZIP                     X(5)             48010
 02 PAY001-RATE                     9(3)V99          00950
```

15. Because WA-HOURS was the second to last field under WORK-AREA, press the DOWN PF key to locate the second to last field under PAYROLL-DATA-EMP001, which is PAY001-HOURS, as shown in Figure 12-18. The data in this field was moved to WA-HOURS.

Figure 12-18. Program Listing Screen — Working Storage — Invalid Data

```
 Abend-AID for CICS --------- Program Listing ----------- Row 000033 of 000307
COMMAND ===>                                                SCROLL ===> PAGE
                                                                         ==>
To reset display to the abending/last executed statement, select RESET
To reset display to the point of entry into this listing, select ENTRY
Program Listing for CCAADEMO    Compiled 29JUN2003 at 10:51:14

  03 PAY001-DTEFF-MM                XX                01
  03 PAY001-DTEFF-DD                XX                01
  03 PAY001-DTEFF-YY                XX                84
 02 PAY001-LST-PCT                  9(3)V9            0110
 02 PAY001-TAX-RAT                  9(3)V9            0200
 02 PAY001-YTD-GRS                  S9(5)V99          +1500000
 02 PAY001-YTD-TAX                  S9(5)V99          +0300000
 02 PAY001-HOURS                    XXX               ***
 02 PAY001-MSG                      X(26)             SPACES
01 PAYROLL-DATA-EMP999
 02 PAY999-TYPE                     X                 I
 02 PAY999-NAME                     X(15)             MR. JOHN DOE
 02 PAY999-ADDRESS
  03 PAY999-STREET                  X(12)             897 TULIP
  03 PAY999-CITY                    X(8)              CITYTOWN
  03 PAY999-STATE                   XX                MI
```

16. Note that PAY001-HOURS is defined as alphanumeric, XXX, and was initialized to '***'. However, this data was moved to WA-HOURS, which is a numeric field. To correct the invalid data and resolve the abend, change PAY001-HOURS to a numeric field, 999, and initialize it to a numeric value.

Part 3.
Region Dump Processing

Part 3 of this guide describes the following Abend-AID for CICS procedures unique to region dump processing:

- Importing region dumps
- Analyzing region dumps
- Analyzing storage violations
- Analyzing MVS virtual storage.

Note: Systems programmers should read this part of the guide in its entirety. Application programmers may refer to this part of the guide on an as-needed basis.

The following chapters are in Part 3:

Chapter 13, "Importing Region Dumps"

Chapter 13 describes the procedures for automatically or manually importing region dumps into Abend-AID for CICS.

Chapter 14, "Analyzing Region Dumps"

Chapter 14 describes how to use the Diagnostic Summary. This screen diagnoses and analyzes region dumps, provides reasons why they occur, and recommends solutions.

Chapter 15, "Analyzing Storage Violations"

Chapter 15 describes possible approaches for using Abend-AID for CICS to analyze the cause of storage violations.

Chapter 16, "Analyzing MVS Virtual Storage"

Chapter 16 describes a possible approach for using Abend-AID for CICS to resolve an S878-xx abend or S80A-xx.

Chapter 13. Importing Region Dumps

To analyze a region dump, you first must import it. This chapter describes the dataset requirements necessary for dump import, the impact dump import has on the Abend-AID Directory and dump analysis, and the methods available for performing dump import. These methods include:

- Automatically via the MVS post-dump exit or the SVC 51 hook
- Manually from the Dataset Import screen
- Manually from the MVS console.

Abend-AID for CICS can import and analyze all standard IBM region dumps, including SDUMP (SVC or console), SLIP, and SYSMDUMP. It can also import and process non-CICS region dumps.

Required Dump Dataset Attributes

Abend-AID for CICS completes the importing of dumps at the dataset level. For these datasets to be imported, they must have the following attributes:

Table 13-1. Required Dump Dataset Attributes

z/OS and OS/390, Systems	
RECFM=F	RECFM=FBS
LRECL=4160	LRECL=4160
BLKSIZE=4160	BLKSIZE=a multiple of 4160

Dump datasets are imported in a first-in, first-out order, with the automatic import queue holding a maximum of 162 dumps.

Note: Abend-AID for CICS cannot automatically import a dump directly from a SYS1.DUMPxx dataset. Instead, it copies the dataset to another DASD file and then imports that file. For Abend-AID for CICS to perform a dump copy, the region dump capture option must be customized and the MVS post-dump exit installed. For the steps, refer to the *Abend-AID for CICS Installation and Customization Guide*.

Abend-AID for CICS can automatically import dumps taken to automatically allocated datasets (MVS version 5 and more current) if the MVS post-dump exit is installed.

Impact on the Abend-AID Directory

When Abend-AID for CICS imports a dump dataset, it adds one or more entries to the Abend-AID Directory. This directory lists the dumps available for a specific CICS region or region group. For more information about the Abend-AID Directory, refer to “Abend-AID Directory” on page 4-2.

If the imported dump dataset contains more than one address space, Abend-AID for CICS adds separate entries to the Abend-AID Directory for each one and assigns them all the *identical* entry number. For example, SVC dumps usually contain a single address space, but console and SLIP dumps can have several address spaces within a single dump dataset. Because Abend-AID for CICS does not reuse entry numbers, it assigns the next highest ID number to each successive entry added. The Abend-AID Directory displays these IDs in its Entry field.

Note: If you have specified the COUPLE SDATA parameter, the coupling facility address space (XCFAS) is dumped in the same dump dataset when SDUMPs are taken. This dump appears on the Abend-AID Directory as a separate entry, but has the same entry number as any other ASID in the dump dataset. The job name associated with the entry is XCFAS.

Consult with the MVS system programmer at your site if you need more information.

Impact on Dump Analysis

Once imported, a dump is available for display through the Abend-AID for CICS online interface. However, until dump analysis is run, the dump functions you can perform are limited to navigating storage and executing IPCS commands. The latter assumes your site installed IPCS as part of its Abend-AID for CICS installation. Refer to the *Abend-AID for CICS Installation and Customization Guide* for more information.

Abend-AID for CICS automatically starts dump analysis on all imported datasets that have a single CICS address space if the appropriate customization option is set. Refer to Chapter 18, "Customizing Dump Capture and Processing Options" of the *Abend-AID for CICS Installation and Customization Guide* for additional information. If a dataset has no CICS address space or more than one, Abend-AID for CICS does not automatically run dump analysis. Instead, you have to invoke dump analysis manually against each address space in the dump dataset with the Abend-AID Directory's **A** (Analyze Dump) line command.

During dump import and dump analysis, system messages are generated in the Dump Analysis Message Log. To display this log, either select a dump from the Abend-AID Directory with the **G** (Messages) line command, or type **MLOG** in the COMMAND (or OPTION) field on any Abend-AID for CICS screen and press Enter. For the MLOG fast-path command to function, however, you must first select a dump from the Abend-AID Directory.

Abend-AID for CICS and SVC Dump SUMDUMP Data

CICS region dumps always contain SVC dump summary data (SUMDUMP records), which you can view with Abend-AID for CICS. Your site's installer can use a viewing server configuration parameter to specify whether to merge SDUMP SUMDUMP records into region dumps when you view them through Abend-AID for CICS. The default is **YES**. Refer to the *Abend-AID for CICS Installation and Customization Guide* for additional information.

Importing Dumps Automatically

The MVS post-dump exit and the SVC 51 hook both facilitate the automatic importing of dumps into Abend-AID for CICS. To use either the exit or the hook, complete the procedures described in the *Abend-AID for CICS Installation and Customization Guide*.

Only the following dump types can be imported automatically:

- Console dumps that have an appropriate title (Refer to the *Abend-AID for CICS Installation and Customization Guide*)
- Dumps taken to a user-defined dataset
- SVC dumps of a single CICS address space initially taken to an SYS1.DUMPxx dataset and then copied to the dataset defined in the dump capture options
- Dumps taken to automatically allocated datasets.

If the automatic importing of a dump dataset fails, Abend-AID for CICS writes an error message to the System Messages field on the Entry Information screen. For information about this screen, refer to "Region Entry Information Screen" on page 4-8.

Importing Dumps Manually

You can manually import dumps from either the Dataset Import screen or from the MVS console. Importing dumps manually provides an alternative to importing dumps automatically through the optional MVS post-dump exit or SVC 51 interface. It is also the only method available for importing SLIP, SYSMDUMP, and most console dumps.

Note: You cannot import a dump directly from a SYS1.DUMPxx dataset. First, copy the SYS1.DUMPxx dataset to a dataset with the same attributes, using IEBGENER or an equivalent utility. Next, import the copied dump into Abend-AID for CICS.

Dataset Import Screen

You can initiate the import of any *region* dump from the Dataset Import screen, shown in Figure 13-1, but you cannot use it to import transaction dumps. Once Abend-AID for CICS completes a dump import, it sends a confirmation message that the dump is available for display. When analysis is complete, a second message displays.

Figure 13-1. Dataset Import Screen

```
 Abend-AID for CICS --------------- Dataset Import ----------------------------
COMMAND ===>


 Specify import information below, then press Enter to initiate the import.

 Dataset Name        ===> CV.CICS.CTSxxDUMP.SVC001

 Comments (Optional) ===> CICS TS for z/OS 3.1 SVC dump
```

You always have access to the Dataset Import screen, regardless whether any region or transaction dump is currently selected. To display this screen from any Abend-AID for CICS screen, enter **IMPORT** as a fast-path command. The Dataset Import screen is also available as a selection on the Primary Options menu for region dumps. Once you select a region dump, you can also enter **=I** or **>I** to display the Dataset Import screen.

MVS MODIFY Command

You can also manually import dumps directly from the MVS console using the MVS MODIFY command and its IMPORT keyword. For information about this command, refer to the *Abend-AID for CICS Installation and Customization Guide*.

Chapter 14. Analyzing Region Dumps

This chapter describes how to analyze region dumps using the Diagnostic Summary. Because the summary provides you direct access to much of the information you need for diagnosing the region dump, begin your analysis using this screen. Also described are the following screens that you can access from the Diagnostic Summary for additional information about the region dump:

- Task Detail
- Task/Wait Analysis menu
  - Task Summary
  - Task/Wait Analysis
- Trace Listing
- Kernel Domain Error Table
  - Kernel Domain Error Detail
  - Kernel Linkage Stack
- Enqueue Summary
- Program Change Summary
- Storage Addressability Summary
- Storage Address Analysis.

Before beginning your analysis of the region dump using the Diagnostic Summary, make sure you read Chapter 3, "Abend-AID for CICS Interface" to familiarize yourself with the Abend-AID for CICS screen layout and text display defaults. Note how to enter fast-path and line commands. In particular, review "Cursor Point-and-Shoot Feature" on page 3-6 for an explanation of the alternative methods for accessing program storage and detailed information about specific data elements. Online help is available for any Abend-AID for CICS screen, field, system message, or command.

For information about using the Diagnostic Summary for transaction abend analysis, refer to Chapter 8, "Analyzing Transaction Abends".

Diagnostic Summary

The region dump Diagnostic Summary is the logical starting point for debugging the majority of CICS Transaction Server for z/OS and OS/390 region dumps for which Abend-AID for CICS has run dump analysis. It states the reason for a region failure, identifies the location of corrupted storage, indicates which tasks most likely caused the error, and suggests which dump displays to view first. From selected fields on the Diagnostic Summary, you also have direct access to additional screens that provide further details about the region dump.

The Diagnostic Summary consists of two or more pages and contains the following sections:

- Description
- Analysis.

Two different Diagnostic Summary formats are available: *full text* and *abbreviated text*. The full-text format, shown in Figure 14-1 through Figure 14-3 on page 14-3, is the default format and provides a narrative description of the reason for the dump. It also provides supporting text that incorporates tab-selectable addresses and the exception trace entry. Supporting text also describes information displayed in the fields.

To change the default diagnostic summary format, change the Default region dump Diagnostic Summary format field on the User Profile screen to **A** (ABBREVIATED).

Figure 14-1. Diagnostic Summary for a Region Dump (Narrative Format), Page 1

```
 Abend-AID for CICS -------- Diagnostic Summary --------- Row 000001 of 000033
COMMAND ===>                                                SCROLL ===> PAGE
MSDSD0539I Dump 5 (H01AC260) successfully selected
Date... 16FEB2004 Time... 17:09:27   ASID... 0027   Dump Code... SM0102
Title.. CICS DUMP: SYSTEM=H01AC260 CODE=SM0102   I   Category.... STG VIOL

To display the Diagnostic Summary in abbreviated format select ABBREV

                                Description

This dump ( code SM0102 ) was taken because CICS detected a storage
violation.

The CICS message associated is: DFHSM0102 H01AC260 A storage violation
(code X'0D11') has been detected by module DFHSMMF .

The short symptom string is: PIDS/565501800 LVLS/410 MS/DFHSM0102
RIDS/DFHSMMF PTFS/UN66186 PRCS/00000D11

                                  Analysis

A storage violation occurred. CICS detected that the storage at address
00182610 has an invalid storage zone. The leading storage zone is
C2F0F0F0F0F0F6F0 and the trailing storage zone is FFF0F0F0F0F0F6F0.
```

Figure 14-2. Diagnostic Summary for a Region Dump (Narrative Format), Page 2

```
 Abend-AID for CICS -------- Diagnostic Summary --------- Row 000015 of 000033
COMMAND ===>                                                SCROLL ===> PAGE

Date... 16FEB2004  Time... 17:09:27   ASID... 0027   Dump Code... SM0102
Title.. CICS DUMP: SYSTEM=H01AC260 CODE=SM0102   I   Category.... STG VIOL

To display the Diagnostic Summary in abbreviated format select ABBREV

                                  Analysis

Addressability and matching information are available for the area.

The current task at the time the dump was taken was 60.

The CICS trace table has 3 exception entries, and 2 are related to task 60.
The last exception trace entry for task 60 gives the following information:

     00060 1 ME FF45 MEWS  *EXC* SYMREC-ERROR

The CICS Kernel Error Table had 8 (x' 00000008 ') entries. The most recent
entry KEER0001 indicated an ---/ASRA abend percolate at 17:07:44 on
16FEB2003.

There are no CICS enqueues held.
```

Figure 14-3. Diagnostic Summary for a Region Dump (Narrative Format), Page 3

```
 Abend-AID for CICS -------- Diagnostic Summary --------- Row 000030 of 000033
COMMAND ===>                                                SCROLL ===> PAGE


Date... 16FEB2004  Time... 17:09:27   ASID... 0027   Dump Code... SM0102
Title.. CICS DUMP: SYSTEM=H01AC260 CODE=SM0102   I   Category.... STG VIOL

To display the Diagnostic Summary in abbreviated format select ABBREV

                                  Analysis

There are no tasks waiting for storage.

No programs where changed within the last 14 days.
```

The abbreviated format, shown in Figure 14-4 below and Figure 14-5 on page 14-4, provides the same information as the full-text format, but without the accompanying narrative. It does not explain the meaning or use of the listed fields, but you can obtain this information from the field help or by toggling to the full-text format. Toggle between the two screens using the ABBREV or FULL selection displayed on the first line of each page of the Diagnostic Summary.

Figure 14-4. Diagnostic Summary for a Region Dump (Abbreviated Format), Page 1

```
 Abend-AID for CICS -------- Diagnostic Summary --------- Row 000001 of 000017
COMMAND ===>                                                SCROLL ===> PAGE

Date... 16FEB2004  Time... 17:09:27   ASID... 0027   Dump Code... SM0102
Title.. CICS DUMP: SYSTEM=H01AC260 CODE=SM0102   I   Category.... STG VIOL
Message.. DFHSM0102 H01AC260 A stor   Symptom String... PIDS/565501800 LVLS/

To display the Diagnostic Summary in full format select FULL

Storage Violation
Storage in error...... 00182610            Invalid storage zone
Leading storage zone.. C2F0F0F0F0F0F6F0
Trailing storage zone. FFF0F0F0F0F0F6F0

Task Information
Current task.......... 60

Trace Information
System exceptions..... 3
Task exceptions....... 2

Other Information
Kernel Errors......... 8
Enqueues.............. 0
```

Figure 14-5. Diagnostic Summary for a Region Dump (Abbreviated Format), Page 2

```
 Abend-AID for CICS -------- Diagnostic Summary --------- Row 000016 of 000017
COMMAND ===>                                                SCROLL ===> PAGE


Date... 16FEB2004  Time... 17:09:27   ASID... 0027   Dump Code... SM0102
Title.. CICS DUMP: SYSTEM=H01AC260 CODE=SM0102   I   Category.... STG VIOL
Message.. DFHSM0102 H01AC260 A stor   Symptom String... PIDS/565501800 LVLS/

To display the Diagnostic Summary in full format select FULL

Storage suspends...... 0
Recent changes........ 0
```

Access the Diagnostic Summary by doing *one* of the following:

- Enter **S** as a line command on the Abend-AID Directory next to the entry for the region dump you want to analyze, and then press Enter.
- If you have already selected the region dump, do *one* of the following:
  - Directly access the Diagnostic Summary from the Abend-AID for CICS Primary Options menu.
  - Enter **DIAG** as a fast-path command on any Abend-AID for CICS screen, and then press Enter.

To analyze the selected region dump, do the following:

1. Note general information about the region dump from the fields displayed at the top of the Diagnostic Summary. Information reported for each dump includes the following:
   - Date and time of the abend
   - Address space ID
   - Dump code
   - CICS dump title
   - Problem category
   - CICS message
   - Symptom string.
2. Review the Description section for a description of the abend and an explanation of the probable cause. Note the dump code, CICS message, and symptom string associated with the abend.
3. Review the Abend-AID for CICS analysis displayed at the beginning of the Analysis section. Use the cursor point-and-shoot feature to access diagnostic information specific to the abend.
4. Access task, trace, kernel domain, and enqueue information, when available, as follows:
   - Press Enter on the Current task field to display the Task Detail screen, which is explained in "Task Detail Screen" on page 14-5.

- Enter **TASKS** as a fast-path command on the Diagnostic Summary to display the Task/Wait Analysis menu, which is explained in “Task/Wait Analysis Menu” on page 14-6.
- Press Enter on the exception entries or trace entries field to display the Trace Listing screen, which is explained in “Trace Listing Screen” on page 14-9.
- Press Enter on the Kernel errors field to display the Kernel Domain Error Table, which is explained in “Kernel Domain Error Table Screen” on page 14-11.
- Press Enter on the CICS enqueue field to display the Enqueues Summary screen, which is explained in “Enqueue Summary Screen” on page 14-13.
- Press Enter on the changed field to display the Program Change Summary screen, which is explained in “Program Change Summary Screen” on page 14-15.

5. Access the specific storage information in hexadecimal format for any address or symbol displayed by using the HEXD PF key to display the Memory Display screen, which is explained in “Memory Display” on page 5-3.
6. When available, display DSECTs using the DSECT PF key, the Storage Addressability Summary screen using the WHO PF key, and the Storage Address Analysis screen using the WHERE primary command. The Storage Addressability Summary screen is explained in “Storage Addressability Summary Screen” on page 14-15. The Storage Address Analysis is explained in “Storage Address Analysis Screen” on page 14-16.

Task Detail Screen

The Task Detail screen, shown in Figure 14-6, provides detailed information about the status of a CICS task at the time of the abend. It includes transaction information, program information, wait reason, register information, and storage utilization. You can use the cursor point-and-shoot feature to access the kernel linkage stack, task control area (TCA), transaction queue element (TQE), program control table entry (PCT), and dispatcher task detail (DTA) in interpreted, DSECT, and hexadecimal format. You can also display wait analysis information by pressing Enter on a resource type or resource name.

Besides accessing the Task Detail screen for only the current active task using the cursor point-and-shoot feature on the Diagnostic Summary or the TCA Interpreted screen and pressing Enter, you can also access this screen by executing the **S** line command against any CICS task displayed on the Task/Wait Analysis screen.

Figure 14-6. Task Detail Screen

```
 Abend-AID for CICS ------------- Task Detail --------------------------------
COMMAND ===>

Task..... 00052         Error Flag... YES          Kernel Task..... KETA0011
TCA...... TCA0011       Enqueue Held. NO           Resource Type...
TQE...... TQE0011       Terminal.....              Resource Name...
Tran..... GU1           Program...... DLIGU1       TASKDATAKEY..... USER
DTA...... DTA0011       Offset.......              EXECKEY......... USER
Userid... CFXRFD0       UOWID........ ACFBDFC68FB68001

Register Save Area from: HLL
  REG 0    REG 1    REG 2    REG 3    REG 4    REG 5    REG 6    REG 7
  00000004 00000000 00275054 00093058 80000000 000930A4 00087100 00275054
  REG 8    REG 9    REG 10   REG 11   REG 12   REG 13   REG 14   REG 15
  0003F15C 0005D86A 00274F10 00087348 00087000 8003CBA0 8521DB80 8005DA32

            --------------- Transaction Storage ---------------     Terminal
            CICS Below   User Below    CICS Above    User Above     Storage
Areas (Hex) 00000002     00000003      00000003      00000000       00000000
Bytes (Hex) 00000250     00001170      000002A0      00000000       00000000
```

To obtain additional information about the abending task, do the following:

1. Note general information about the abending task such as the program name and task number.
2. Access the specific storage information in disassembled format for the Task's PSW by using the cursor point-and-shoot feature to display the Storage Disassembly screen, which is explained in "DISASM" on page 18-10.
3. Access the specific storage information in hexadecimal format for any address or symbol displayed by using the HEXD PF key to display the Memory Display screen, which is explained in "Memory Display" on page 5-3.
4. Display DSECTs using the DSECT PF key, and when available, display the Storage Addressability Summary screen using the WHO PF key, and the Storage Address Analysis screen using the WHERE primary command. The Storage Addressability Summary screen is explained in "Storage Addressability Summary Screen" on page 14-15. The Storage Address Analysis is explained in "Storage Address Analysis Screen" on page 14-16.
5. Access other task-related information by using the cursor point-and-shoot feature as follows:
   - Press Enter at the Kernel Task field to display the Kernel Linkage Stack screen.
   - Press Enter at the TCA field to display the Interpreted Task Control Area screen.
   - Press Enter at the TQE field to display the Interpreted Transaction Queue Element screen.
   - Press Enter at the Tran field entry to display the Program Control Table screen.
   - Press Enter at the DTA field to display the Dispatcher Task Detail screen.

Task/Wait Analysis Menu

The Task/Wait Analysis menu, shown in Figure 14-7, lets you access two screens that display task-related information: the Task Summary screen as described in "Task Summary Screen" on page 14-7 and the Task/Wait Analysis screen, as described in "Task/Wait Analysis Screen" on page 14-7. Access the Task/Wait Analysis menu from the Primary Options menu for region dumps or by entering **TASKS** as a fast-path command on any Abend-AID for CICS screen.

Figure 14-7. Task/Wait Analysis Menu

```
 Abend-AID for CICS -------- Task/Wait Analysis ------------------------------
OPTION  ===>

                    1  TASKSUMM Task Summary

                    2  TASKLIST Task List/Wait Analysis
```

Task Summary Screen

The Task Summary screen, shown in Figure 14-8 on page 14-7, displays the number of tasks on the various task queues controlled by the Dispatcher Domain, the Kernel Domain, and the Transaction Manager Domain. Access this screen from the Task/Wait Analysis Menu as shown in Figure 14-7 on page 14-6, or enter **TASKSUMM** as a fast-path command on any Abend-AID for CICS screen.

Figure 14-8. Task Summary Screen

```
 Abend-AID for CICS ----------- Task Summary ---------------------------------
COMMAND ===>

Dispatcher Domain Chains              Kernel Domain Task Entries
Chain                     Tasks       Type                      Tasks
Total....................   15       Allocated................   22
Executable...............   15       Running..................    0
Hand-Postable............    2       Not Running..............   22
Quasi-Reentrant (Front)..    0       Tasks in Error...........    1
Quasi-Reentrant (Back)...    0
Resource Owning (Front)..    0
Resource Owning (Back)...    0       Transaction Manager Statistics
Concurrent (Front).......    0       Type                      Tasks
Concurrent (Back)........    0       Total....................    9
Secondary LU (Front).....    0       Active...................    9
Secondary LU (Back)......    0       Max Tasks................    0
RP/ONC (Front)...........    0       Tclass...................    0
RP/ONC (Back)............    0       Pre-Scheduled............    0
File Owning (Front)......    0
File Owning (Back).......    0


 Press ENTER on a tab-selectable field to display the indicated task list
```

Task/Wait Analysis Screen

The Task/Wait Analysis screen, shown in Figure 14-9 through Figure 14-11 on page 14-9, provides a complete summary and detailed information about all tasks. This information helps system programmers quickly identify any tasks that are waiting on specific resources and all task-related errors. The Task/Wait Analysis screens lists the number of tasks on the dispatcher domain, kernel domain, and transaction manager task chains. Access the Task/Wait Analysis Screen from the Task/Wait Analysis Menu as shown in Figure 14-7 on page 14-6, or enter **TASKLIST** as a fast-path command on any Abend-AID for CICS screen

Figure 14-9. Task/Wait Analysis Screen

```
 Abend-AID for CICS -------- Task/Wait Analysis ------- Row 000001 of 000011
COMMAND ===>                                            SCROLL ===> PAGE
                                                                  ==>
  S Task Detail    L Program Levels       C Storage Chain    E EIB Detail
  T Trace Table    M Monitoring Detail    W Wait Analysis

                                 DS             XM
  DTA     Task    Tran Terminal Status TCA     Status KETASK   TXN     Error
  ******* ******* **** ****     ***    ******* ***    ******** ******* ***
_ DTA0029 0000082 CEMT B172     RUN    TCA0029 ACT    KETA0029 TXN0029 NO
_ DTA002A 0000078 LINK B173     SUS    TCA002A ACT    KETA002A TXN002A YES
_ DTA0007 0000020 CSNE          SUS    TCA0007 ACT    KETA0007 TXN0007 NO
_ DTA0016 0000018 CFQR          SUS    TCA0016 ACT    KETA0016 TXN0016 NO
_ DTA0030 0000017 CFQS          SUS    TCA0030 ACT    KETA0030 TXN0030 NO
_ DTA0010 0000007 CSTP          SUS    TCA0010 ACT    KETA0010 TXN0010 NO
_ DTA0019 0000005 CSSY          SUS    TCA0019 ACT    KETA0019 TXN0019 NO
_ DTA0009 0000004 CSSY          SUS    TCA0009 ACT    KETA0009 TXN0009 NO
_ DTA0008 0000000               SUS                   KETA0008         NO
_ DTA0021 0000000               SUS                   KETA0021         NO
_ DTA0006 0000000               SUS                   KETA0006         NO
  ***************************** BOTTOM OF DATA *****************************


Type a line command and press Enter to process it
```

Figure 14-10. Task/Wait Analysis Screen, Scrolled Right

```
 Abend-AID for CICS --------- Task/Wait Analysis --------- Row 000001 of 000011
COMMAND ===>                                                SCROLL ===> PAGE
                                                                 <== ==>
  S Task Detail    L Program Levels       C Storage Chain    E EIB Detail
  T Trace Table    M Monitoring Detail    W Wait Analysis

                                     Enq           Resource Resource Time of
  DTA     Storage    Program  Offset  Held NQEA     Type     Name     Suspend
  ******* ********** ******** ******* ***  ******** ******** ******** *********
_ DTA0029        20K DFHEMTD  +014BC0 NO                               00:00:00.
_ DTA002A         2K RFDREAD1 +000064 NO            ICWAIT   B173     15:30:28.
_ DTA0007         3K DFHZNAC          NO                               15:30:54.
_ DTA0016         1K DFHFCQT          NO            FCCFQR             14:48:58.
_ DTA0030         1K DFHFCQT          NO            FCCFQS             15:29:01.
_ DTA0010         1K DFHZCSTP         NO            TCP_NORM DFHZDSP   15:31:34.
_ DTA0019         0K DFHAPATT         NO            ICEXPIRY DFHAPTIX  14:55:33.
_ DTA0009         0K DFHAPATT         NO            ICMIDNTE DFHAPTIM  14:48:37.
_ DTA0008         0K                  NO            TIEXPIRY DS_NUDGE  14:55:33.
_ DTA0021         0K                  NO            SMSYSTEM           15:27:42.
_ DTA0006         0K                  NO            ENF      NOTIFY    14:47:26.
  ***************************** BOTTOM OF DATA ******************************



Type a line command and press Enter to process it
```

Figure 14-11. Task/Wait Analysis Screen, Scrolled Far Right

```
 Abend-AID for CICS --------- Task/Wait Analysis --------- Row 000001 of 000011
COMMAND ===>                                                SCROLL ===> PAGE
                                                                  <==
  S Task Detail    L Program Levels       C Storage Chain    E EIB Detail
  T Trace Table    M Monitoring Detail    W Wait Analysis

                   Resource Resource Time of
  DTA      NQEA     Type     Name     Suspend      Userid   UOWID
  *******  ******** ******** ******** ************ ******** ****************
_ DTA0029                             00:00:00.000 AACRFD0  ACFBDFC68FB68001
_ DTA002A           ICWAIT   B173     15:30:28.922 AACRFD0  ACFBDFAAFA278601
_ DTA0007                             15:30:54.148          ACFBDFC341C34400
_ DTA0016           FCCFQR            14:48:58.900          ACFBD66465063601
_ DTA0030           FCCFQS            15:29:01.038          ACFBD66464DD5C01
_ DTA0010           TCP_NORM DFHZDSP  15:31:34.276          ACFBD650C5227601
_ DTA0019           ICEXPIRY DFHAPTIX 14:55:33.804          ACFBD64FE732DA01
_ DTA0009           ICMIDNTE DFHAPTIM 14:48:37.739          ACFBD64FE6FCA201
_ DTA0008           TIEXPIRY DS_NUDGE 14:55:33.722
_ DTA0021           SMSYSTEM          15:27:42.409
_ DTA0006           ENF      NOTIFY   14:47:26.603
  ****************************** BOTTOM OF DATA ******************************
```

Trace Listing Screen

The Trace Listing screen — shown in its abbreviated format in Figure 14-12 on page 14-10, in its short format in Figure 14-13 on page 14-10, and in its full format in Figure 14-14 on page 14-11 — displays all or selected entries from the CICS trace table. The Trace Listing screen identifies the order in which application programs execute in CICS and is useful in diagnosing problems involving complex system interactions.

Exactly how the trace listing is displayed depends on which field on the Diagnostic Summary you use to access it. You can display all entries for the selected task starting at the last exception entry or all exception entries.

Besides accessing the Trace Listing screen using the cursor point-and-shoot feature on the Diagnostic Summary and pressing Enter, you can also access this screen from the Abend-AID for CICS Primary Options menu or by entering TRACE as a fast-path command on any Abend-AID for CICS screen. Selection criteria are available if you access the trace table in this manner. Pressing Enter at the SELECT field displays the Trace Selection Criteria window from which you can choose criteria for displaying the trace data.

Figure 14-12. Abbreviated Trace Listing, Filtered by Exception Entries

```
 Abend-AID for CICS ---- Abbreviated Trace Listing ----- Row 000001 of 000006
COMMAND ===>                                                SCROLL ===> PAGE
                                                                      ==>
To display the Trace Listing in short format select SHORT
To display the Trace Listing in full format select FULL
To specify selection criteria select SELECT

       KE         Trace
Entry  Task Task  Point   Interpretation
013606 0011 00052 DS 0069 DSSR  *EXC* SUSP_PURGED           SUSPEND,010B0007
016121 0011 00052 AP 0780 SRP   *EXC* RECOVERY_ENTERED
016125 0011 00052 AP 0780 SRP   *EXC* RECOVERY_ENTERED
016131 0011 00052 AP 0509 APDS  *EXC* RECOVERY_ENTER_FROM   DFHAPDS
016132 0011 00052 AP 0780 SRP   *EXC* RECOVERY_ENTERED
016429 0011 00052 SM 0D11 SMMF  *EXC* Storage_check_failed_on_freemain_reque
****************************** BOTTOM OF DATA ******************************
```

Pressing Enter at the SHORT field displays the following short trace listing.

Figure 14-13. Short Trace Listing

```
 Abend-AID for CICS --------- Short Trace Listing ------- Row 000001 of 000129
COMMAND ===>                                                SCROLL ===> PAGE

To display the Trace Listing in full format select FULL
To display the Trace Listing in abbreviated format select ABBREV
To specify selection criteria select SELECT

Entry  Task  Interpretation
013606 00052 DS 0069 DSSR *EXC* SUSP_PURGED SUSPEND
             SUSPEND_TOKEN(010B007) RESOURCE_NAME(SUSPEND)
             RESOURCE_TYPE(KCCOMPAT) PURGEABLE(NO) DEADLOCK_ACTION(INHIBIT)
             RET-850B3000 16:24:49.2247317500 **.**********

016121 00052 AP 0780 SRP *EXC* RECOVERY_ENTERED
             RET-850B3000 16:24:50.3640933752 01.1393616252*

016125 00052 AP 0780 SRP *EXC* RECOVERY_ENTERED
             RET-860B3000 16:24:54.9650980002 04.6010046250*

016131 00052 AP 0509 APDS *EXC* RECOVERY_ENTERED_FROM DFHAPDS
             RET-850B3000 16:24:55.0331000002 **.**********

016132 00052 AP 0780 SRP *EXC* RECOVERY_ENTERED
             RET-850B3000 16:24:59.7824500000 04.7493499997*
```

Pressing Enter at the FULL field displays the following full trace listing.

Figure 14-14. Full Trace Listing

```
 Abend-AID for CICS -------- Full Trace Listing -------- Row 000001 of 000129
COMMAND ===>                                                SCROLL ===> PAGE

To display the Trace Listing in short format select SHORT
To display the Trace Listing in abbreviated format select ABBREV
To specify selection criteria select SELECT

Entry  Task  Interpretation
013606 00052 DS 0069 DSSR *EXC* - SUSP_PURGED - FUNCTION(SUSPEND)
             SUSPEND_TOKEN(010B0007) RESOURCE_NAME(SUSPEND)
             RESOURCE_TYPE(KCCOMPAT) PURGEABLE(NO) DEADLOCK_ACTION(INHIBIT)
             KE_NUM-0011 TCB-0089DBF0 RET-850B3000 TIME-16:24:49.2247317500
             INTERVAL-**.**********
             1-0000  C4C6C8C4 E2E2D940                    *DFHDSSR         *
             2-0000  00580000 00000014 00000001 00000000  *................*
               0010  A7050000 00000000 04000600 00000000  *x...............*
               0020  00000000 010B0007 E2E4E2D7 C5D5C440  *........SUSPEND *
               0030  D2C3C3D6 D4D7C1E3 40404040 40200440  *KCCOMPAT     .. *
               0040  40404040 40404020 03020003 00000000  *       .........*
               0050  00000000 00680000                    *........        *
             3-0000  FFFFFFFF 01070005 04FA0000 0538FC48  *................*
               0010  FFFFFFFF 00000000 00000000 00000000  *................*
               0020  00000010 00000003 040BB4B0 00000000  *................*
```

To obtain additional information about the trace listing associated with the abending task, do the following:

1. Note general information about the trace listing such as the entry number, kernel domain task number, CICS transaction task number, CICS component ID, trace point ID, and the interpretation comment.
2. Access the specific storage information in hexadecimal format for any address or symbol displayed by using the HEXD PF key to display the Memory Display screen, which is explained in “Memory Display” on page 5-3.
3. Toggle among the abbreviated, short, and full trace listings using the ABBREV, SHORT, or FULL selections.

Kernel Domain Error Table Screen

The Kernel Domain Error Table screen, shown in Figure 14-15 on page 14-12, displays an overview of the program checks and system abends that occurred for the CICS session associated with the region dump. For each abend, an entry is displayed that identifies the kernel error number, system and user completion code, abend error type, kernel task, and date and time of the abend. Press Enter at the Error field for an entry to display detail information about an individual abend including CICS error data, program information, and registers. You can also use the cursor point-and-shoot feature to display linkage stack entries for an individual task by pressing Enter at the Kernel Task field.

Besides accessing the Kernel Domain Error Table screen using the cursor point-and-shoot feature on the Diagnostic Summary and pressing Enter, you can also access this screen by entering the KEER command as a fast-path command on any Abend-AID for CICS screen.

Figure 14-15. Kernel Domain Error Table Screen

```
 Abend-AID for CICS ----- Kernel Domain Error Table ----- Row 000001 of 000008
COMMAND ===>                                                SCROLL ===> PAGE


Error     Error Code  Error Type     Kernel Task  Date       Timestamp
********  **********  *************  ********     ********   ************
KEER0001  ---/ASRA    AB PERCOLATE   KETA002F     16FEB2004  17:07:44.635
KEER0002  0C7/AKEA    PROGRAM CHECK  KETA002F     16FEB2004  17:07:29.835
KEER0003  ---/AEIP    AB PERCOLATE   KETA002F     16FEB2004  16:58:04.097
KEER0004  ---/AEIP    AB PERCOLATE   KETA002F     16FEB2004  16:58:04.097
KEER0005  ---/AEIM    AB PERCOLATE   KETA002F     16FEB2004  16:57:51.179
KEER0006  ---/AEIM    AB PERCOLATE   KETA002F     16FEB2004  16:57:51.179
KEER0007  ---/ASRA    AB PERCOLATE   KETA002F     16FEB2004  16:57:32.711
KEER0008  0C7/AKEA    PROGRAM CHECK  KETA002F     16FEB2004  16:57:26.131
****************************** BOTTOM OF DATA ********************************
```

To obtain additional information about the abending program, do the following:

1. Note general information about the abending program, such as kernel error number, system and user completion code, abend error type, kernel task, and date and time of the abend.
2. Access other kernel domain information by using the cursor point-and-shoot feature as follows:
   - Press Enter at an Error field entry to display the Kernel Domain Error Detail screen, as shown in Figure 14-16.
   - Press Enter at a Kernel Task field entry to display the Kernel Linkage Stack screen, as shown in Figure 14-17 on page 14-13.

Figure 14-16. Kernel Domain Error Detail Screen

```
 Abend-AID for CICS ------ Kernel Domain Error Detail ------------------------
COMMAND ===>

KE Error Symbol KEER0001       Code... ---/ASRA       Task... 60
KE Error Number 00000008       Type... AB PERCOLATE   Date... 16FEB2004
Kernel Task.... KETA002F       TCA.... 08567080       Time... 17:07:44.635
Transaction.... ERWV           DTA.... 0849D180
Program........ DFHAPLI1

Error happened under the CICS RB

CICS Error Data
PSW............ 00000000  8854B37A      Instruction Length... 0000
Program........ DFHSRP                 Interrupt Code....... 0000
Offset......... 0000037A               Reason............... 0007
EXEC Key.......

Instruction.... 5840 9028         L     R4,40(,R9)

Reg 0    Reg 1    Reg 2    Reg 3    Reg 4    Reg 5    Reg 6    Reg 7
0000040C 0856756C 80045570 8854B1D2 088099F0 88679B5F 8867AB5E 8867BB5D
Reg 8    Reg 9    Reg 10   Reg 11   Reg 12   Reg 13   Reg 14   Reg 15
085FF958 0856756C 0886C008 01000000 08567080 088099F0 8854B37A 88300080
```

Figure 14-17. Kernel Linkage Stack Screen

```
 Abend-AID for CICS ------- Kernel Linkage Stack -------- Row 000001 of 000009
COMMAND ===>                                                SCROLL ===> PAGE


 Kernel Linkage Stack for Kernel Task........ KETA002F

Stack                          Module    Return
Entry    Length  Type          Address   Address   Offset    Error  Name
*******  ******  **********    ********  ********  ********  *****  ********
KETS001    0120  BOTTOM        08300400  883006D0  000002D0         DFHKETA
KETS002    01F0  DOMAIN        0830F058  8830F16E  00000116         DFHDSKE
KETS003    0370  DOMAIN        0832F5E0  8832FD4E  0000076E         DFHXMTA
KETS004    0350  DOMAIN        08620A00  886212B6  000008B6         DFHPGPG
KETS005    0400  DOMAIN        08678B60  887844D6  00000000         DFHAPLI1
KETS006    00F8  LIFO          08784150  887845A2  00000452         DFHESC
KETS007    0290  DOMAIN        0831EDE8  8832028C  000014A4         DFHSMMF
KETS008    0F90  DOMAIN        08379870  8837CFF2  00003782         DFHMEME
KETS009    0480  DOMAIN        0835ABC0  8835C190  000015D0         DFHDUDU
****************************** BOTTOM OF DATA ********************************
```

Enqueue Summary Screen

The Enqueue Summary screen, shown in Figure 14-18 on page 14-14, displays a listing of all enqueue element areas (NQEAs) in the system. An NQEA is an area of storage containing data required by a specific task. NQEAs are created when the EXEC CICS ENQ command is issued for a particular resource or by CICS for various services.

You can use the cursor point-and-shoot feature to access the interpreted task control area (TCA), program control table (PCT), and PPT detail. You can also use the HEXD PF key to access the storage information associated with an enqueue name address or NQEA address. In addition, you can display the Enqueue Detail screen and the Abbreviated Trace Listing screen for the selected task using the **E** and **T** line commands, respectively.

Besides accessing the Enqueue Summary screen using the cursor point-and-shoot feature on the Diagnostic Summary, you can also access this screen by entering the **ENQ** command as a fast-path command on any Abend-AID for CICS screen.

Figure 14-18. Enqueue Summary Screen (Scrolled Left)

```
 Abend-AID for CICS --------- Enqueue Summary ----------- Row 000001 of 000006
COMMAND ===>                                                SCROLL ===> PAGE
                                                                         ==>
  E Enqueue Detail         T Trace Detail

                                 DS     Tasks   Enqueue  Enqueue Enqueue   Enque
  TCA     Tran Task    Program  Status Waiting Address  Length  Character Hexad
  ******* **** ******* ******** ***    ***     ******** ***     ********  *****
_ TCA0029 CECI 0000025 DFHECID  SUS    NO      0632A4CC   3     B02       C2D6F
_ TCA0029 CECI 0000025 DFHECID  SUS    NO      0632A40C   3     B01       C2D6F
_ TCA0029 CECI 0000025 DFHECID  SUS    NO      0632A64C   3     B04       C2D6F
_ TCA0029 CECI 0000025 DFHECID  SUS    NO      0632A70C   3     B05       C2D6F
_ TCA0029 CECI 0000025 DFHECID  SUS    YES     0632A34C   3     B0B       C2D6C
_ TCA0029 CECI 0000025 DFHECID  SUS    NO      0632A58C   3     B03       C2D6F
  ****************************** BOTTOM OF DATA ******************************
```

To obtain additional information about enqueues, do the following:

1. Note general information about listed NQEAs from the fields displayed on the Enqueues Summary screen. Pay particular attention to task status and tasks waiting entries. These entries indicate the dispatcher status of the task holding the enqueue, and whether the enqueue selected is causing other tasks to wait.
2. Access the specific storage information in hexadecimal format for the Enqueue name/address and NQEA address entries by using the cursor point-and-shoot feature and pressing the HEXD PF key to display the Memory Display screen, which is explained in "Memory Display" on page 5-3. Display the first 8 bytes of the enqueue name/address in character format by scrolling right. The default RIGHT PF key is PF11.
3. When available, display DSECTs using the DSECT PF key, the Storage Addressability Summary screen using the WHO PF key, and the Storage Address Analysis screen using the WHERE primary command. The Storage Addressability Summary screen is explained in "Storage Addressability Summary Screen" on page 14-15. The Storage Address Analysis is explained in "Storage Address Analysis Screen" on page 14-16.
4. Access other task-related information by using the cursor point-and-shoot feature as follows:
   - Press Enter at the TCA field to display the TCA Interpreted screen.
   - Press Enter at the Tran field to display the PCT Detail screen.
   - Press Enter at the Program field to display the PPT Detail screen.

Program Change Summary Screen

The Program Change Summary screen, shown in Figure 14-19, displays a listing of CICS load modules for the abending region in most recently changed order. Any modules that have changed and have been used in this execution of CICS are listed. Use the cursor point-and-shoot feature at the Module field to display the PPT Detail screen. Besides accessing the Program Change Summary screen using the cursor point-and-shoot feature and pressing Enter on the Diagnostic Summary, you can access this screen by entering **CHANGES** as a fast-path command on any Abend-AID for CICS screen.

Notes:

1. The region dump interface must be started to produce a Program Change Summary. Refer to Appendix A, "Supplied Transaction" for information about starting the region dump interface.
2. Capturing the program change summary information adds a small amount of overhead to the dump capture process. Usually this amount is insignificant, but if you see any performance degradation at dump capture time, you can turn off the region dump interface while still leaving the transaction dump interface active.

Figure 14-19. Program Change Summary

```
 Abend-AID for CICS ------ Program Change Summary ------ Row 000001 of 000042
COMMAND ===>                                                SCROLL ===> PAGE

Date of   Date of
Last Zap  Last Link   Module    Load Library
********  ********    ********  *******************************************
          15FEB2004   C21TCVT1  MP.ALPHA.FX.LOAD2.FIX
          09FEB2004   CCATCUS2  MP.ALPHA.FX.LOAD2
          09FEB2004   C21SAAON  MP.ALPHA.FX.LOAD2
          09FEB2004   C21SAA2N  MP.ALPHA.FX.LOAD2
          09FEB2004   C21SDCTL  MP.ALPHA.FX.LOAD2
          09FEB2004   C21SEXIT  MP.ALPHA.FX.LOAD2
          09FEB2004   C21SR327  MP.ALPHA.FX.LOAD2
          03FEB2004   ERWLFD10  CV.R10.ERW.LOAD
          03FEB2004   ERWLFD99  CV.R10.ERW.LOAD
          25JAN2004   DFHDMP    CICS212.LOADLIB
          25JAN2004   DFHPUP    CICS212.LOADLIB
          25JAN2004   DFHQRY    CICS212.LOADLIB
          25JAN2004   DFHZCQ    CICS212.LOADLIB
          25JAN2004   DFHZNAC   CICS212.LOADLIB
          20JAN2004   DFHEIQDS  CICS212.LOADLIB
          20JAN2004   DFHEIQSP  CICS212.LOADLIB
          20JAN2004   DFHEIQSX  CICS212.LOADLIB
          20JAN2004   DFHEMTD   CICS212.LOADLIB
```

Storage Addressability Summary Screen

The Storage Addressability Summary screen, shown in Figure 14-20 on page 14-16, displays a list of items found to have addressability to the address specified when using the WHO command. This screen displays storage areas that match a specified storage area when using the MATCH command. The Storage Addressability Summary screen is composed of two areas. The first area is a hexadecimal display of the area at the address requested for addressability analysis. The first area is not scrollable. The second area is a list of items that had addressability to the requested address. The second area is scrollable. Access the Storage Addressability Summary from a specific storage address or symbol using the WHO or MATCH primary command. To display detailed information about any task listed in the WHO field, position the cursor on the task entry in the WHO field and press Enter.

Figure 14-20. Storage Addressability Summary

```
 Abend-AID for CICS -- Storage Addressability Summary -- Row 000001 of 000001
COMMAND ===>                                                SCROLL ===> PAGE

 Area:   0025FD84
 0025FD84 +00000000  00000000 00000000 00000000 00000000  *................*
 0025FD94 +00000010  00000000 00000000 00000000 00000000  *................*
 0025FDA4 +00000020  00000000 00000000 00000000 00000000  *................*
 0025FDB4 +00000030  00000000 00000000 00000000 00000000  *................*

Who                 Address   Occurrences  Description
****************    ********  ***********  ************************
TCB00009            007A03E0            5  MVS TASK CONTROL BLOCK
****************************** BOTTOM OF DATA ******************************









To display the addressability detail, press ENTER on the who field
```

Storage Address Analysis Screen

The Storage Address Analysis screen, shown in Figure 14-21, displays a list of storage areas and control blocks that contain the address or symbol specified in the WHERE command. The Storage Address Analysis screen is composed of two areas. The first area is a hexadecimal display of the area at the address requested for address analysis. The first area is not scrollable. The second area is a list of items that contain the requested address. The second area is scrollable. Access the Storage Address Analysis screen from a specific storage address or symbol using the WHERE primary command.

Figure 14-21. Storage Address Analysis

```
 Abend-AID for CICS ----- Storage Address Analysis ----- Row 000001 of 000003
COMMAND ===>                                                SCROLL ===> PAGE

Area..... 00264D88
00264D88 +00000000  00264D88 00264D88 00269008 002D1000  *..(h..(h........*
00264D98 +00000010  00000000 094B5710 094AD5E4 000061A8  *.........¢NU../y*
00264DA8 +00000020  094015E0 002D6408 09CC60C4 094B5958  *. .\......-D....*
00264DB8 +00000030  00264010 8003BBA0 802D657A 00000028  *.. ."..."..:....*


Storage is located in the following areas:

Name     Description                            Address   Offset    Length
******** ************************************** ********  ********  ********
UDSA     CICS STORAGE AREA                      0023A000  0002AD88  00100000
XMB      CICS SUBPOOL PAGE                      00264000  00000D88  00001000
XMB00914 TASK STORAGE ALLOCATED - USER_BELOW    00264D70  00000018  00000270
****************************** BOTTOM OF DATA ******************************
```

Chapter 15. Analyzing Storage Violations

This chapter describes possible approaches for using Abend-AID for CICS to analyze storage violations. A CICS Transaction Server for OS/390 version 1 storage violation example is provided.

Programming errors that commonly cause storage violations include the following:

- A failure to reassemble or recompile programs after redefining a common storage area. This mistake can result in issuing a GETMAIN for insufficient storage.
- Runaway subscripts caused by tables with no size limitations.
- Writing data to an area after a FREEMAIN has been issued.
- Posting an ECB for a canceled task. With this type of error, a transaction attempts to *hand-post* an ECB after a task waiting on it has been canceled. As a result, data belonging to an unrelated activity becomes corrupted.

The approach described in this chapter for analyzing storage violations is based on a specific storage violation dump. To generate this dump, install and invoke the supplied CICS transaction ERWV described in the *Abend-AID for CICS Installation and Customization Guide*.

After generating the dump, use the Dataset Import screen to import it. However, if you installed Abend-AID for CICS to import dumps automatically, this final step is not necessary. For information about importing dumps, refer to "Dataset Import Screen" on page 13-3.

Note: Because of unique CICS system activity, the dump information in your Abend-AID for CICS screens will differ from the information shown in this chapter. In particular, addresses may vary.

Storage Violation Overview

CICS detects storage violations when one of the following becomes corrupted:

- The initial or trailing SAA of a TIOA
- The leading or trailing storage check zone of a user-task storage element.

The approach to solving a storage violation consists of three major steps:

1. Locate the corrupted area of storage and identify the owner of the storage.

   To locate the address of the storage, display the Diagnostic Summary screen. The text that begins the screen's Analysis section states the address at which Abend-AID for CICS detected the storage violation. Use the HEXD command to display the affected storage. You can then examine the corrupted storage to determine whether the data suggests which transaction, program, or routine caused the error. For information about the Diagnostic Summary, refer to Chapter 14, "Analyzing Region Dumps". For specifics about the HEXD command, refer to "HEXD" on page 18-15.

2. Determine the error that CICS encountered.

   CICS detects storage violations by checking the SAA or the storage check zones when it receives a FREEMAIN request for an element of storage. When a TIOA becomes

corrupted, CICS also checks the chains when it issues a FREEMAIN request for the storage belonging to a TCTTE after the last output has taken place. In the case of user task storage, CICS also checks the chains when a FREEMAIN request for the storage belonging to a TCA is issued at the end of the task. Therefore, CICS detects the storage violation at the time it occurs, not when you check the SAA chain or the storage check zones.

When CICS detects a storage violation, it makes an exception trace entry in the internal trace table, issues message DFHSM0102, and takes a CICS system dump. In addition, CICS abends the transaction (if running) whose storage has been violated.

Using the CICS Trace Table function, you can view the exception trace entry to determine the error that CICS encountered. The Diagnostic Summary also has a description of the error that occurred.

3. Determine who corrupted the area of storage.

   View the data overlaying the SAA or storage check zone to determine if its nature suggests which program put it there. You can view the overlaying data by examining the exception trace entry in the internal trace table, or by examining the violated storage. If task storage has been corrupted, Abend-AID for CICS uses the storage control data areas to rebuild the chains. Because these areas are not part of the task subpool, they are less likely to be corrupted. You can view storage control areas on the Task Subpool Summary Display.

   If you are still unable to find the cause of the storage violation, examine the trace entries in more detail to determine when the storage was last checked and found to be correct. The code causing the storage violation will have been executing between the time that trace entry was made and the time the exception trace entry was made. To get more detailed trace data, you may have to force storage chain checking using either the CSFE transaction, or the CHKSTSK or CHKSTRM startup override.

Storage violations that CICS does not detect generally affect innocent transactions (those that did not cause the violation). Such violations are usually more difficult to resolve, because you often are not aware of them until long after they have occurred. A lengthy history of system activity is usually required to determine the cause.

Use the following technique to determine the cause of these storage violations:

1. Examine the content of the data overlaying the SAA or storage check zone to see if it is familiar and suggests who caused the corruption.
2. Examine the trace table to locate an entry showing a GETMAIN or FREEMAIN addressing the storage area.
3. After you have located the GETMAIN or FREEMAIN entry addressing the storage, find the ID of the associated transaction by locating the trace entry for TASK ATTACH.

Storage Violation Debugging Example

The following steps provide a suggested approach to solving a CICS Transaction Server for OS/390 version 1 storage violation using Abend-AID for CICS:

Note: This approach generally also applies to CICS Transaction Server for z/OS and to CICS version 4.1

1. The Abend-AID for CICS Diagnostic Summary usually provides the logical starting point for solving any dump. Choose option 1 from the Abend-AID for CICS Primary Options Menu, shown in Figure 15-1 on page 15-3, to display the Abend-AID for CICS Diagnostic Summary screen shown in Figure 15-2 on page 15-3.

Figure 15-1. Primary Options Menu

```
 Abend-AID for CICS --------- Primary Options -------------------------------
OPTION  ===>

1  DIAG     Diagnostic Summary        6  MVSINFO  MVS Information

2  TASKS    Task/Wait Analysis        7  IPCS     IPCS Command Facility

3  TRACE    CICS Trace Listing        8  DOMAINS  CICS Domain Analysis

4  CICSINFO CICS Information          9  ZOSSDMP  z/OS SVC Dump Analysis

5  CB       Control Blocks/Storage


D  DIRECTRY Abend-AID Directory       I  IMPORT   Dataset Import

S  SUMMARY  Fault Summary             U  USER     User Control Facility

X  EXIT     Exit                      N  NEWS     Product News
```

Figure 15-2. Diagnostic Summary

```
 Abend-AID for CICS -------- Diagnostic Summary --------- Row 000001 of 000032
COMMAND ===>                                                SCROLL ===> CSR

Date... 12FEB2004  Time... 09:54:41   ASID... 0000   Dump Code... SM0102
Title.. CICS DUMP: SYSTEM=H01AC118 CODE=SM0102   I   Category.... STG VIOL

To display the Diagnostic Summary in abbreviated format select ABBREV

                                Description

This dump ( code SM0102 ) was taken because CICS detected a storage
violation.

The CICS message associated is: DFHSM0102 H01AC118 A storage violation
(code X'0D11') has been detected in module DFHSMMF .

The short symptom string is: PIDS/566540301 LVLS/330 MS/DFHSM0102
RIDS/DFHSMMF PTFS/UN34195 PRCS/00000D11

                                  Analysis

A storage violation occurred. CICS detected that the storage at address
0013C690 has an invalid storage zone. The leading storage zone is
E7D4C2F0F0F0F2F7 and the trailing storage zone is FFD4C2F0F0F0F2F7.

Addressability and matching information are available for the area.

The current task at the time the dump was taken was 27.

The CICS trace table has 2 exception entries, and 2 are related to task 27.
The last exception trace entry for task 27 gives the following information:

     00027 1 ME FF45 MEWS  *EXC* SYMREC-ERROR

The CICS Kernel Error Table has no entries.

There are no CICS enqueues held.

Unable to determine the number of programs changed in the last 14 days
because the region dump interface was not active at the time the dump was
taken.
```

Note: Your screen may contain other entries depending upon the errors found.

The Diagnostic Summary provides a list of errors found within the CICS region dump. Because this dump was caused by a storage violation, the corrupted storage address displayed in the Analysis section is a good place to start. The current task message indicates that task 27 owns the corrupted storage. (Your task number probably will be different.)

You now have completed the first step in storage violation problem determination: you have located the storage and identified its owner.

The Diagnostic Summary offers direct access to several other related Abend-AID for CICS displays. For example, addressability to the corrupted storage can be obtained by selecting the Addressability field and pressing Enter. Pressing the HEXD PF key with the cursor positioned on any address displays the contents of the memory at that address. Because this is a storage violation error, it may help to look at the corrupted memory first.

2. Press the HEXD PF key with the cursor on the storage address having the invalid storage zone. This displays the Memory Display, beginning at the corrupted address (0013C690 in this example). The Memory Display is shown in Figure 15-3.

Figure 15-3. Memory Display

```
 Abend-AID for CICS ------------ Memory Display ------------------------------
COMMAND ===>                                                  SCROLL ===> CSR

                                                        Clip Prev Next Lock

   Start Addr: 0013C690 Comment: ____________________________________
0013C690 area PVT      sp 130 key 8  offset 000EC000  0114000 bytes remain

 Address    Offset    Word 1   Word 2   Word 3   Word 4    Storage
 0013C690 +00000000  E7D4C2F0 F0F0F2F7 FFFFFFFF FFFFFFFF  *XMB00027........*
 0013C6A0 +00000010  FFFFFFFF FFFFFFFF FFFFFFFF FFFFFFFF  *................*
 0013C6B0 +00000020  FFFFFFFF FFFFFFFF FFFFFFFF FFFFFFFF  *................*
 0013C6C0 +00000030  FFFFFFFF FFFFFFFF FFFFFFFF FFFFFFFF  *................*
 0013C6D0 +00000040  FFFFFFFF FFFFFFFF FFFFFFFF FFFFFFFF  *................*
 0013C6E0 +00000050  FFFFFFFF FFFFFFFF FFFFFFFF FFFFFFFF  *................*
 0013C6F0 +00000060  FFFFFFFF FFFFFFFF FFFFFFFF FFFFFFFF  *................*
 0013C700 +00000070  FFFFFFFF FFFFFFFF FFFFFFFF FFFFFFFF  *................*
 0013C710 +00000080  FFFFFFFF FFFFFFFF FFD4C2F0 F0F0F2F7  *.........MB00027*
 0013C720 +00000090  00000000 00000000 00000000 00000000  *................*
 0013C730 +000000A0  00000000 00000000 00000000 00000000  *................*
 0013C740 +000000B0  00000000 00000000 00000000 00000000  *................*
 0013C750 +000000C0  00000000 00000000 00000000 00000000  *................*
 0013C760 +000000D0  00000000 00000000 00000000 00000000  *................*
 0013C770 +000000E0  00000000 00000000 00000000 00000000  *................*
```

The trailing SAA has been overlaid with X'FF'. Note that although the Analysis message referred to the beginning storage zone address, it is the trailing zone which is actually corrupted. You have now determined the error that was encountered by CICS, the second step in solving a storage violation. At this point, it would be useful to know who could have addressed the storage and is therefore a candidate for corrupting the storage. The Abend-AID for CICS WHO command is very useful in this situation.

3. Enter **+8** in the COMMAND field of the Memory Display to position the screen at the beginning address of the storage (past the first SAA), as shown in Figure 15-4 on page 15-5.

Figure 15-4. Positioning the screen at the beginning address of the storage

```
 Abend-AID for CICS ------------ Memory Display -----------------------------
COMMAND ===>                                                  SCROLL ===> CSR

                                                        Clip Prev Next Lock
   Start Addr: 0013C690 Comment:
0013C698 area PVT      sp 130 key 8  offset 000EC008  0113FF8 bytes remain

 Address    Offset    Word 1   Word 2   Word 3   Word 4    Storage
 0013C698 +00000008  FFFFFFFF FFFFFFFF FFFFFFFF FFFFFFFF  *................*
 0013C6A8 +00000018  FFFFFFFF FFFFFFFF FFFFFFFF FFFFFFFF  *................*
 0013C6B8 +00000028  FFFFFFFF FFFFFFFF FFFFFFFF FFFFFFFF  *................*
 0013C6C8 +00000038  FFFFFFFF FFFFFFFF FFFFFFFF FFFFFFFF  *................*
 0013C6D8 +00000048  FFFFFFFF FFFFFFFF FFFFFFFF FFFFFFFF  *................*
 0013C6E8 +00000058  FFFFFFFF FFFFFFFF FFFFFFFF FFFFFFFF  *................*
 0013C6F8 +00000068  FFFFFFFF FFFFFFFF FFFFFFFF FFFFFFFF  *................*
 0013C708 +00000078  FFFFFFFF FFFFFFFF FFFFFFFF FFFFFFFF  *................*
 0013C718 +00000088  FFD4C2F0 F0F0F2F7 00000000 00000000  *.MB00027........*
 0013C728 +00000098  00000000 00000000 00000000 00000000  *................*
 0013C738 +000000A8  00000000 00000000 00000000 00000000  *................*
 0013C748 +000000B8  00000000 00000000 00000000 00000000  *................*
 0013C758 +000000C8  00000000 00000000 00000000 00000000  *................*
 0013C768 +000000D8  00000000 00000000 00000000 00000000  *................*
 0013C778 +000000E8  00000000 00000000 00000000 00000000  *................*
 0013C788 +000000F8  00000000 00000000 00000000 00000000  *................*
```

4. Place the cursor on the displayed address (0013C698 in this example), and press the WHO PF key to display the Storage Addressability Summary, shown in Figure 15-5.

Figure 15-5. Storage Addressability Summary

```
 Abend-AID for CICS ---Storage Addressability Summary --- Row 000001 of 000002
COMMAND ===>                                                  SCROLL ===> CSR

 Area:   0013C698
 0013C698 +00000000  FFFFFFFF FFFFFFFF FFFFFFFF FFFFFFFF  *................*
 0013C6A8 +00000010  FFFFFFFF FFFFFFFF FFFFFFFF FFFFFFFF  *................*
 0013C6B8 +00000020  FFFFFFFF FFFFFFFF FFFFFFFF FFFFFFFF  *................*
 0013C6C8 +00000030  FFFFFFFF FFFFFFFF FFFFFFFF FFFFFFFF  *................*

Who                 Address   Occurrences  Description
*****************   ********  ***********  ************************

TCA0007.ERWV        00055000            4  CICS TASK CONTROL AREA
KETA0007.ERWV       07D81AD0            3  CICS KERNEL TASK
****************************** BOTTOM OF DATA ********************************
```

The Storage Addressability Summary identifies a TCA (TCA0007 in this example) and transaction ERWV as the only task that had addressability to the corrupted storage (although this task may not be the only one corrupting the storage). It would be useful to identify the program that transaction ERWV was executing.

5. Place the cursor on the displayed TCA value (TCA0007 in this example) in the WHO field, and press Enter to display the Addressability Detail shown in Figure 15-6 on page 15-6.

Figure 15-6. Addressability Detail (TCA)

```
 Abend-AID for CICS ---- Addressability Detail - TCA ---- Row 000001 of 000004
COMMAND ===>                                                SCROLL ===> CSR
                                                                         ==>
 Area:   0013C698
 0013C698 +00000000  FFFFFFFF FFFFFFFF FFFFFFFF FFFFFFFF  *................*
 0013C6A8 +00000010  FFFFFFFF FFFFFFFF FFFFFFFF FFFFFFFF  *................*
 0013C6B8 +00000020  FFFFFFFF FFFFFFFF FFFFFFFF FFFFFFFF  *................*
 0013C6C8 +00000030  FFFFFFFF FFFFFFFF FFFFFFFF FFFFFFFF  *................*

Who      TRAN Save Area Address  Description   Program  Register Contents  Disp
******** **** ********* ******** ************* ******** ***      ********  ****
TCA0007  ERWV HLLSA000  0013C508 HLL SAVE AREA ERWMSTGV R01      0013C570  +128
                                                        R04      0013C698  +000
                                                        R07      0013C0C4  +5D4
                                                        R08      0013C508  +190
****************************** BOTTOM OF DATA ********************************
```

The Addressability Detail identifies program ERWMSTGV as the program that had addressability to the overlaid storage. This means that program ERWMSTGV owns the save area containing the registers that had addressability to the storage.

It is also helpful to know the task number associated with this transaction and program. The Abend-AID for CICS TCA Interpreted screen provides this information.

6. Place the cursor on the displayed TCA value (TCA0007 in this example) and press Enter. The user TCA Interpreted screen shown in Figure 15-7 is displayed, identifying the associated task (in this example, task 27). This is the same task identified by the Diagnostic Summary as the current task.

Figure 15-7. TCA Interpreted Screen

```
 Abend-AID for CICS ---------- TCA Interpreted ------------------------------
COMMAND ===>

To access the Task Detail screen, select Task Detail
To access the Trace Table screen, select Trace Table
To access the EIB screen, select EIB

TCA......................... TCA0004   Task Number................. 06516
TCA Address................. 0006B190  Transaction Id............. ERWV
System TCA Address.......... 0006B000  Queue Element Area.......... 00000000
Facility Control Indicator.. 01        ICE Address................. 00000000
Facility Control Area....... 0106AA74  HLL Save Area Address....... 0FA10E50
KC ECB Address.............. 00006C94  DLI Indicator............... 00
Common Control Overlay...... 0006B210  ISB Address................. 00000000
TWA Address................. 0006B290  EIS Initialized............ YES
TWA Length.................. 0         EIS Address................. 0006B344


            ------------ Transaction Storage -------------    -- Terminal --
              CICS24      User24      CICS31      User31         Storage
Areas (Hex) 00000001    00000000    00000003    00000000            0000
Bytes (Hex) 00000440    00000000    00004820    00000000        00000000
```

The Abend-AID for CICS presentation of the trace table lets you determine what program ERWMSTGV was doing just before the corruption.

7. Enter **TRACE** as a fast-path command or **=3** as a jump command to display the Abbreviated Trace Listing screen. This screen allows you to view a short, an abbreviated, and a full version of the trace table. The default display is the entire abbreviated trace table. The oldest entry appears at the top of the screen, as shown in Figure 15-8.

Figure 15-8. Abbreviated Trace Listing

```
 Abend-AID for CICS ----- Abbreviated Trace Listing ----- Row 000001 of 000091
COMMAND ===>                                                SCROLL ===> PAGE
                                                                         ==>

To display the Trace Listing in short format select SHORT
To display the Trace Listing in full format select FULL
To specify selection criteria select SELECT

       KE         Trace
Entry  Task Task  Point   Interpretation
000001 0007 00027 MN 0202 MNMN  EXIT  TRANSACTION_INITIALISATION/OK
000002 0007 00027 AP FD05 ZSUP  ENTRY TASK_STARTUP          07EB8228
000003 0007 00027 AP 00EA TMP   ENTRY LOCATE                PFT DFHCICST
000004 0007 00027 AP 00EA TMP   EXIT  NORMAL
000005 0007 00027 AP 00E5 XSMN  ENTRY CHECK                 ERWV
000006 0007 00027 AP 00E5 XSMN  EXIT  OK
000007 0007 00027 AP 00F2 PCP   ENTRY XCTL-CONDITIONAL      ERWMSTGV
000008 0007 00027 AP 00EA TMP   ENTRY LOCATE                PPT ERWMSTGV
000009 0007 00027 AP 00EA TMP   EXIT  NORMAL
000010 0007 00027 LD 0001 LDLD  ENTRY ACQUIRE_PROGRAM       07E9A590 , 00000001
000011 0007 00027 DS 0002 DSAT  ENTRY CHANGE_MODE           RO
000012 000F TCP   DS 0005 DSSR  EXIT  WAIT_OLDW/OK
000013 000F TCP   DS 0004 DSSR  ENTRY WAIT_OLDW             DFHZDSP,TCP_NORM,00
000014 0007 00027 DS 0003 DSAT  EXIT  CHANGE_MODE/OK        QR
```

At this point, you can choose specific selection criteria by tabbing to the SELECT field and pressing Enter. A pop-up window is displayed in which you can select trace entries by domain ID, trace point ID, kernel task number, or task identifier, or display only the exception entries.

Note: Your screen may have other entries.

8. Enter **M** (maximum) in the COMMAND field and press the DOWN PF key to scroll down to the bottom of the Abbreviated Trace Listing. The entry displayed at the bottom of the screen shown in Figure 15-9 on page 15-8 is the newest trace entry.

Figure 15-9. Abbreviated Trace Listing (bottom)

```
 Abend-AID for CICS ----- Abbreviated Trace Listing ----- Row 000077 of 000091
COMMAND ===>                                                SCROLL ===> PAGE
                                                                         ==>

To display the Trace Listing in short format select SHORT
To display the Trace Listing in full format select FULL
To specify selection criteria select SELECT

       KE         Trace
Entry  Task Task  Point   Interpretation
000079 0007 00027 ME 0402 MEBU  EXIT  BUILD_MESSAGE/OK      0
000080 0007 00027 ME FF00 SUWT  ENTRY SEND_DIRECT           07DD0AA7 , 00000002
000081 0007 00027 ME FF35 MEFO  ENTRY -FUNCTION(FORMAT_MESSAGE) 09153312 , 0000
000082 0007 00027 ME FF36 MEFO  EXIT  -FUNCTION(FORMAT_MESSAGE) OK
000083 0007 00027 ME FF02 SUWT  EVENT BEFORE-MVS-WTO
000084 0007 00027 ME FF03 SUWT  EVENT AFTER-MVS-WTO
000085 0007 00027 ME FF01 SUWT  EXIT  SEND_DIRECT/OK
000086 0007 00027 ME 0314 MEME  EVENT ISSUE-MVS-FREEMAIN
000087 0007 00027 ME 0315 MEME  EVENT MVS-FREEMAIN-COMPLETE
000088 0007 00027 ME 0302 MEME  EXIT  SEND_MESSAGE/OK
000089 0007 00027 DU 0101 DUDU  ENTRY SYSTEM_DUMP           SM0102,07D95311 , 0
000090 0007 00027 DU 0600 DUTM  ENTRY LOCATE_SYSTEM_DUMPCODE SM0102
000091 0007 00027 DU 0601 DUTM  EXIT  LOCATE_SYSTEM_DUMPCODE/OK NO,YES
****************************** BOTTOM OF DATA ******************************
```

At this point, the easiest way to find the last exception trace entry is to use the FIND command to search backward through the trace table (from newest to oldest entry).

9. Enter **F *EXC* PREV** to search for a previous occurrence of the *EXC* character string. The request is successful, and a screen similar to the one shown in Figure 15-10 is displayed.

Figure 15-10. Finding a Previous Occurrence on the Abbreviated Trace Listing Screen

```
 Abend-AID for CICS ----- Abbreviated Trace Listing ----- Row 000033 of 000091
COMMAND ===>                                                SCROLL ===> PAGE
                                                                         ==>

To display the Trace Listing in short format select SHORT
To display the Trace Listing in full format select FULL
To specify selection criteria select SELECT

       KE         Trace
Entry  Task Task  Point   Interpretation
000034 0007 00027 AP 00E1 EIP   ENTRY FREEMAIN
000035 0007 00027 SM 0D01 SMMF  ENTRY FREEMAIN              0013C698,EXEC,CICS
000036 0007 00027 SM 0D11 SMMF  *EXC* Storage_check_failed_on_freemain_request
000037 0007 00027 ME 0301 MEME  ENTRY SEND_MESSAGE          66,SM0102,07D1D1C9
000038 0007 00027 ME 0501 MEIN  ENTRY INQUIRE_MESSAGE_DATA  87E15048,DFHMET1E,6
000039 0007 00027 KE 0101 KETI  ENTRY INQ_LOCAL_DATETIME_DECIMAL
000040 0007 00027 KE 0102 KETI  EXIT  INQ_LOCAL_DATETIME_DECIMAL/OK 10121994,09
000041 0007 00027 KE 0401 KEGD  ENTRY INQUIRE_KERNEL
000042 0007 00027 KE 0402 KEGD  EXIT  INQUIRE_KERNEL/OK     H01AC118,JOHN
000043 0007 00027 ME 0502 MEIN  EXIT  INQUIRE_MESSAGE_DATA/OK 07E152B4,07E2D1C7
000044 0007 00027 ME 0401 MEBU  ENTRY BUILD_MESSAGE         07E2D1C7,07E152B4,1
000045 0007 00027 ME FF40 MEWS  ENTRY WRITE_SYMREC          07D9524D , 0000004C
000046 0007 00027 ME FF45 MEWS  *EXC* SYMREC-ERROR
000047 0007 00027 ME FF30 SUME  ENTRY SEND_ME_MSG           7E,00011B3F , 00000
```

Your display may include an *EXC* SYMREC-ERROR entry. This entry indicates an error in the attempt to write a symptom record to LOGREC. If you encounter this entry, press the RFIND PF key to repeat the FIND command and locate the next previous occurrence of *EXC*. This occurrence is due to an SAA check failing on a user FREEMAIN. The task corresponding to program ERWMSTGV (task 27 in this example) is shown as the task that issued the FREEMAIN. You should determine what task 27 was doing before the FREEMAIN.

10. Press the UP PF key to scroll up. A page of the Abbreviated Trace Listing, similar to the screen shown in Figure 15-11, is displayed.

    Note: Abbreviated trace table displays are left/right scrollable.

Figure 15-11. Abbreviated Trace Listing

```
 Abend-AID for CICS ----- Abbreviated Trace Listing ----- Row 000022 of 000091
COMMAND ===>                                                SCROLL ===> PAGE
                                                                         ==>
To display the Trace Listing in short format select SHORT
To display the Trace Listing in full format select FULL
To specify selection criteria select SELECT

       KE         Trace
Entry  Task Task  Point   Interpretation
000023 0007 00027 AP F221 LIP   EXIT  Establish_Ownership_Type OK
000024 0007 00027 SM 0C01 SMMG  ENTRY GETMAIN               18C,YES,00,TASK24
000025 0007 00027 SM 0C02 SMMG  EXIT  GETMAIN/OK            0013C4F8
000026 0007 00027 AP 00E1 EIP   ENTRY INQUIRE-SYSTEM
000027 0007 00027 AP FF10 SUXS  ENTRY CSLC                  DFHEIQSA,SYSTEM,INQ
000028 0007 00027 AP FF11 SUXS  EXIT  CSLC/OK
000029 0007 00027 AP 00E1 EIP   EXIT  INQUIRE-SYSTEM        OK
000030 0007 00027 AP 00E1 EIP   ENTRY GETMAIN
000031 0007 00027 SM 0C01 SMMG  ENTRY GETMAIN               80,YES,USER24,EXEC
000032 0007 00027 SM 0C02 SMMG  EXIT  GETMAIN/OK            0013C698
000033 0007 00027 AP 00E1 EIP   EXIT  GETMAIN               OK
000034 0007 00027 AP 00E1 EIP   ENTRY FREEMAIN
000035 0007 00027 SM 0D01 SMMF  ENTRY FREEMAIN              0013C698,EXEC,CICS
000036 0007 00027 SM 0D11 SMMF  *EXC* Storage_check_failed_on_freemain_request
```

In the example, note that task 27 issued a GETMAIN request several entries prior to the FREEMAIN request. Because entry 32 shows the corrupted storage address, task 27 (program ERWMSTGV) is the probable cause of this storage violation.

11. Place the cursor on the entry number associated with the GETMAIN entry (30 in the example) on the Abbreviated Trace Listing screen, and press the DOWN PF key to scroll down as shown in Figure 15-12.

Figure 15-12. Selecting FULL on Abbreviated Trace Listing

```
 Abend-AID for CICS ----- Abbreviated Trace Listing ----- Row 000030 of 000091
COMMAND ===>                                                SCROLL ===> PAGE
                                                                         ==>
To display the Trace Listing in short format select SHORT
To display the Trace Listing in full format select FULL
To specify selection criteria select SELECT

       KE         Trace
Entry  Task Task  Point   Interpretation
000030 0007 00027 AP 00E1 EIP   ENTRY GETMAIN
000031 0007 00027 SM 0C01 SMMG  ENTRY GETMAIN               80,YES,USER24,EXEC
000032 0007 00027 SM 0C02 SMMG  EXIT  GETMAIN/OK            0013C698
000033 0007 00027 AP 00E1 EIP   EXIT  GETMAIN               OK
000034 0007 00027 AP 00E1 EIP   ENTRY FREEMAIN
000035 0007 00027 SM 0D01 SMMF  ENTRY FREEMAIN              0013C698,EXEC,CICS
000036 0007 00027 SM 0D11 SMMF  *EXC* Storage_check_failed_on_freemain_request
000037 0007 00027 ME 0301 MEME  ENTRY SEND_MESSAGE          66,SM0102,07D1D1C9
000038 0007 00027 ME 0501 MEIN  ENTRY INQUIRE_MESSAGE_DATA  87E15048,DFHMET1E,6
000039 0007 00027 KE 0101 KETI  ENTRY INQ_LOCAL_DATETIME_DECIMAL
000040 0007 00027 KE 0102 KETI  EXIT  INQ_LOCAL_DATETIME_DECIMAL/OK 10121994,09
000041 0007 00027 KE 0401 KEGD  ENTRY INQUIRE_KERNEL
000042 0007 00027 KE 0402 KEGD  EXIT  INQUIRE_KERNEL/OK     H01AC118,JOHN
000043 0007 00027 ME 0502 MEIN  EXIT  INQUIRE_MESSAGE_DATA/OK 07E152B4,07E2D1C7
```

Finally, select **FULL**, and press the Enter key to display the Full Trace Listing screen shown in Figure 15-13.

Figure 15-13. Full Trace Listing Screen

```
 Abend-AID for CICS --------- Full Trace Listing -------- Row 000241 of 001071
COMMAND ===>                                                SCROLL ===> PAGE

To display the Trace Listing in abbreviated format select ABBREV
To display the Trace Listing in short format select SHORT
To specify selection criteria select SELECT

Entry  Task  Interpretation
000030 00027 AP 00E1 EIP ENTRY GETMAIN REQ(0004) FIELD-A(0013C508 ..E.)
             FIELD-B(08000C02 ....) KE_NUM-0007 TCB-008DF960 RET-50053914
             TIME-09:54:27.9506599455 INTERVAL-**.**********

000031 00027 SM 0C01 SMMG ENTRY - FUNCTION(GETMAIN) GET_LENGTH(80)
             SUSPEND(YES) STORAGE_CLASS(USER24) CALLER(EXEC) KE_NUM-0007
             TCB-008DF960 RET-88F51C80 TIME-09:54:27.9506711955
             INTERVAL-00.0000112500
             1-0000  00480000 00000011 00000000 00000000  *................*
               0010  B6580000 00000000 02D80158 00000000  *.........Q......*
               0020  00000000 00055000 00000080 00010E30  *......&.........*
               0030  0013C4F8 01131201 00053A78 07D94884  *..D8.........R.d*
               0040  07D9483A 07D948E0                    *.R...R..        *

000032 00027 SM 0C02 SMMG EXIT - FUNCTION(GETMAIN) RESPONSE(OK)
             ADDRESS(0013C698) KE_NUM-0007 TCB-008DF960 RET-88F51C80
```

This screen displays the full individual trace entry for the GETMAIN, which identifies the address of the return point in program ERWMSTGV at which the GETMAIN was issued. This information helps resolve the program error.

Note: The trace listing is also available in short format, as shown in Figure 15-14.

Figure 15-14. Short Trace Listing Screen

```
 Abend-AID for CICS -------- Short Trace Listing -------- Row 000089 of 000372
COMMAND ===>                                                SCROLL ===> PAGE

To display the Trace Listing in short format select FULL
To display the Trace Listing in abbreviated format select ABBREV
To specify selection criteria select SELECT

Entry  Task  Interpretation
000030 00027 AP 00E1 EIP ENTRY GETMAIN REQ(0004)
             FIELD-A(0013C508 ..E.) FIELD-B(08000C02 ....)
             RET-50053914 TIME-09:54:27.9506599455 **.**********

000031 00027 SM 0C01 SMMG ENTRY GETMAIN GET_LENGTH(80)
             SUSPEND(YES) STORAGE_CLASS(USER24) CALLER(EXEC)
             RET-88F51C80 TIME-09:54:27.9506711955 00.0000112500

000032 00027 SM 0C02 SMMG EXIT GETMAIN/OK ADDRESS(0013C698)
             RET-88F51C80 TIME-09:54:27.9509271318 00.0000189383
```

Chapter 16.
Analyzing MVS Virtual Storage

This chapter describes the Abend-AID for CICS Virtual Storage Analysis screens and the enhancement to the Memory Display screen. It also describes an approach for using Abend-AID for CICS to resolve an 878-xx abend or S80A-xx.

An S878 occurs when the system tries and fails to satisfy a STORAGE request, an RU or VRU form of a GETMAIN request, or an RU form of a FREEMAIN request, and depending on the reason code, indicates an out-of-storage condition. An S80A-xx occurs when the system tries and fails to process an R form of the GETMAIN or FREEMAIN macro. The xx is the reason code that explains the error which is also found in the system diagnostic work area (SDWA) in field SDWACRC.

Programming errors that commonly cause an S878-xx or S80A-xx include the following:

- GETMAIN(s) without subsequent FREEMAIN(s); that is, orphaned storage.
- A section of program code that contains a GETMAIN which is repeatedly being executed (loop). Looking at the system trace table also assists in this case.
- An invalid length specified on a GETMAIN.

Further, if the reason code indicates a GETMAIN failure for private area or local system queue area (LSQA) storage, verify that the size specified on the REGION parameter coded on the JOB or EXEC statement is large enough. The size specified on the REGION parameter is limited by the size of the private areas. The size of the private areas is determined by the size of the common areas at IPL time. In other words, storage for the common areas is set aside first and what is left over is for the private areas. The common areas include the prefixed save area (PSA); common service area (CSA); pageable, fixed, and modified link pack areas (PLPA, FLPA, and MLPA); system queue area (SQA); and the nucleus, which is fixed and non-swappable.

Note: For an in-depth discussion of the virtual storage areas, refer to the IBM OS/390 MVS initialization and tuning guide.

In order to determine the exact cause of the S878 or S80A, examine the IEA705I message in the JESMSGLG of the abending job for the xx reason code. If it is not available, the data area containing the unformatted information for the IEA705I is found in the extended nucleus. To find this area in the dump, go to the Control Blocks/Storage screen and select the CVT. Once the CVT is displayed on the Memory Display screen, select the address at offset x'10C'.

Refer to IBM informational APAR II05506 or IEA705I in the IBM messages manual for the layout of this area, which virtual storage manager (VSM) uses as a save area for error conditions. This area is in a module called IEAVMSGS in the extended read/write nucleus, which can also be found from the Nucleus Map display.

The JESMSGLG for the S878 sample created for this demonstration is shown in Figure 16-1 on page 16-2. The reason code is 10, which indicates the GETMAIN was for private area storage that could not be satisfied.

Figure 16-1. JESMSGLOG for the S878 Abend

```
 Abend-AID for CICS ----------- JES2 System Log ---------- Row 000001 of 000095
COMMAND ===>                                               SCROLL===> CSR
                                                                      ==>
 Time     Job      Message
 ******** ******** ************************************************************
 11.41.42 JOB12501  +DFHCP0102I H01AC118 CPI initialization has ended.
 11.41.42 JOB12501  +DFHPR0105I H01AC118 Partner resource manager initialization
 11.41.42 JOB12501  +DFHAI0102I H01AC118 AITM initialization has ended.
 11.41.43 JOB12501  +DFHJC4508 H01AC118 CICS SYSTEM LOG. SECONDARY DATA SET NOW
 11.41.43 JOB12501  +DFHJC4553 07/03/04 11:41:43 H01AC118 Archive job submitted
 11.41.43 JOB12501  +DFHAP1204I H01AC118 COBOL2 is being initialized.
 11.41.43 JOB12501  +DFHSI1517 H01AC118 Control is being given to CICS.
     .          .          .          .          .          .
     .          .          .          .          .          .
     .          .          .          .          .          .
     .          .          .          .          .          .
 11.42.49 JOB12501  IEA705I ERROR DURING GETMAIN SYS CODE = 878-10 CCFXC410 CICS
 11.42.49 JOB12501  IEA705I 00F0C100 008C97D0 008C97D0 00377200 00008000
 11.45.30 JOB12501  IEA995I SYMPTOM DUMP OUTPUT
                    SYSTEM COMPLETION CODE=878  REASON CODE=00000010
                     TIME=11.42.49  SEQ=50362  CPU=0047  ASID=007B
                     PSW AT TIME OF ERROR  070C1000   8155EE6E  ILC 2  INTC 0D
     .          .          .          .          .          .
     .          .          .          .          .          .
 ******************************** BOTTOM OF DATA ********************************
```

Note: Because most of the screens displayed in this chapter are wider than the standard, default display format (24 rows by 80 characters), you may want to change your emulator/terminal display to a wider format (27 rows by 132 columns).

Private Storage Analysis

By looking at the IEA705I, you can also see that the GETMAIN was unconditional for 32K of subpool 55 with backing storage (real) above or below 16 megabytes and virtual storage either above or below. When LOC=ANY is coded on the GETMAIN, VSM first looks to satisfy the request from above 16 megabytes. If unsuccessful, VSM then looks to satisfy the request from below 16 megabytes.

However, this doesn't necessarily indicate that subpool 55 was over-allocated. It just means that the virtual storage area that is constrained is the private area(s) that includes the LSQA. Use the Abend-AID for CICS MVS Storage Analysis function to examine the allocations in the private area(s).

You can access the MVS Storage Analysis option from the MVS Information menu, which is a selection on the Primary Options menu for region dump analysis. Alternatively, once you've selected a region dump, you can enter the MVSSTG fast-path command from the command line on any Abend-AID for CICS screen to directly access the MVS Storage Analysis menu, as shown in Figure 16-2 on page 16-3.

Figure 16-2. MVS Storage Analysis Menu

```
 Abend-AID for CICS ------- MVS Storage Analysis ----------------------------
OPTION  ===>

1  VSMAP    Virtual Storage Map       8  SQASP    SQA Subpools

2  PVTSUM   Private Area Summary      9  CSASUM   CSA Summary

3  PVTSP    Private Subpools          10 CSASP    CSA Subpools

4  LSQA     LSQA Summary              11 LPAMAP   LPA Map

5  LSQASP   LSQA Subpools             12 NUCMAP   Nucleus Map

6  ASMAP    Allocated Storage Map     13 MEMOBJ   Memory Objects

7  SQASUM   SQA Summary               14 DSPACE   Data Spaces
```

The Virtual Storage Map, shown in Figure 16-3, is a good place to start for any issues regarding storage allocations because it provides an overall picture of the address space. You can access this screen by selecting menu option 1 from the MVS Storage Analysis menu, or once you've selected a region dump, you can enter the VSMAP fast-path command from the command line on any Abend-AID for CICS screen.

Figure 16-3. Virtual Storage Map Screen

```
 Abend-AID for CICS ------- Virtual Storage Map --------- Row 000001 of 000021
COMMAND ===>                                               SCROLL ===> DATA

The Ext User Region had reached the highest allocatable address.
The Ext CSA had no pages converted to Ext SQA.
The CSA had no pages converted to SQA.
The User Region had reached the highest allocatable address.

                  Starting  Ending    Size of     Total       Percent
Storage Area      Address   Address   Area        Allocated   Allocated
****************  ********  ********  **********  **********  ***********
Ext Private       10300000  7FFFFFFF  1,831,936K     42,432K      2.316
 Ext User Region  10300000  122FFFFF     32,768K     32,768K    100.000
Ext CSA           08540000  102FFFFF    128,768K    107,732K     83.664
Ext MLPA          0853F000  0853FFFF          4K
Ext FLPA          0853C000  0853EFFF         12K
Ext PLPA          04E2C000  0853BFFF     56,384K
Ext SQA           022FE000  04E2BFFF     44,216K     43,176K     97.648
Ext Nuc (R/W)     0165E000  022FDFFF     12,928K
Ext Nuc (R/O)     01000000  0165DFFF      6,520K
- 16Mb Line ----  --------  --------  ----------  ----------  -----------
Nucleus (R/O)     00FD9000  00FFFFFF        156K
Nucleus (R/W)     00FC3000  00FD8FFF         88K
SQA               00EA7000  00FC2FFF      1,136K      1,136K    100.000
```

The amount of storage allocated in each area except for the LPA and nucleus areas is displayed, along with the percentages these amounts represent. These figures are accumulated/calculated from the actual allocations found during analysis of the address space.

The analysis programs can produce messages in the Dump Analysis Message Log if errors or conditions such as invalid VSM control blocks are found. Normally you can find invalid control blocks for SQA DFEs or CSA DQEs and FQEs if the QUIESCE=NO option was specified on the SDUMP (X) request. QUIESCE=NO leaves the system dispatchable during the dumping of the SQA and CSA so that these areas can be modified (GETMAIN/FREEMAIN) such that the control blocks no longer reflect the storage dumped. Error detection is done such that processing stops only for looping conditions or broken chains, such as a DFE chain that causes the same series of DFEs to be repeatedly processed. This could significantly throw off the calculations of free areas.

From the Virtual Storage Map screen in the fixed header, you can see that both user regions had hit the highest allocatable address allowed. This information confirms that the private area(s) were indeed constrained, more specifically the user regions. Exactly what this indicates is described in the explanation of the Private Area Summary screen below. Also note that the SQA had reached 100 percent allocation and that any further requests for SQA subpools will have to be allocated from the CSA.

User Region Analysis

You can find further detailed information on the Private Area Summary screen, as shown in Figure 16-4. You can navigate to this screen from the Virtual Storage Map by using the cursor-point-and-shoot feature and pressing Enter at the Ext Private, Ext User Region, Private, or User Region field under the Storage Area column. Alternatively, once you've selected a region dump, you can enter the PVTSUM fast-path command on the command line from any Abend-AID for CICS screen. This screen is also option 2 from the MVS Storage Analysis menu.

Figure 16-4. Private Area Summary Screen

```
 Abend-AID for CICS -------- Private Area Summary ----------------------------
COMMAND ===>

LDA Address................ 7FF15EB0
Region Size (Kbytes)....... 8,192
To view the local system queue area select LSQA
To view a list of allocated subpools select List

Extended Private Area                  Private Area
Maximum Address............ 7FFFFFFF   Maximum Address............ 008FFFFF
Low MVS Page Address....... 7F68C000   Low MVS Page Address....... 00899000
User Region Limit Address.. 122FFFFF   User Region Limit Address.. 00814FFF
High User Region Address... 122FFFFF   High User Region Address... 00814FFF
Starting Address........... 10300000   Starting Address........... 00005000
Maximum Size (Kbytes)...... 1,831,936  Maximum Size (Kbytes)...... 9,196
Limit Size (Kbytes)........ 32,768     Limit Size (Kbytes)........ 8,256
Adjusted Size (Kbytes)..... 32,768     Adjusted Size (Kbytes)..... 8,192
Free Blocks Available...... Yes        Free Blocks Available...... Yes

SM Block Address........... 7F80C000
SM Block Size (Kbytes)..... 7,932
```

This screen displays detailed information on both the extended private and private areas. The local data area (LDA) is the VSM anchor block for information specific to an address space. The first five lines under each grouping maps the private areas from the top of each area down to the start of each area. The private areas are further broken down into areas reserved for the operating system and its subsystems (MVS high private), and for user programs running in problem state (user region). The MVS high private area is where LSQA, scheduler work area (SWA), and authorized user key subpools are allocated from. These subpools are allocated from the top of the private area downward, while the user region subpools (0-127, 251, 252) are allocated from the start of the private area upward. No boundaries exist between LSQA, SWA, and authorized user key storage. They are all interspersed with each other, which can be seen on the Allocated Storage Map under the E/PVT Area column.

The user regions are limited in size depending on how the REGION parameter is coded on the JOB or EXEC statement, or whether the site chooses to override the defaults via system exit IEFUSI or IEALIMIT (controls below 16megabyte private area only). Refer to the IBM OS/390 MVS installation exits manual for default limits or for coding either of these exits. Although there may be a limit on the user region, this does not place a limit on the MVS high private area. These subpools can be allocated from below the user region limit, but not below the highest allocated user region address (or page) also known as the *top* of the user region. This *top* is dynamic as storage is allocated and freed. Therefore, the low MVS page address line may be above or below the user region limit address line.

Keep in mind that MVS recovery/termination requires LSQA below 16 megabytes; and if it cannot be acquired, the address space will be terminated. When this occurs, an SVC dump is rarely usable.

This address space had REGION=8M or 8192K coded since the Region Size (Kbytes) field has 8,192. Note that the User Region Limit and High User Region Address fields contain the same addresses, 122FFFFF and 00814FFF. Note also that both Free Blocks Available fields display Yes, indicating free blocks of storage do exist. Use the cursor-point-and-shoot feature and press Enter at the Yes field under the Extended Private Area column to display the Free Block Queue Elements screen, as shown in Figure 16-5. The significance of the Low MVS Page Address field is further discussed in “LSQA Analysis” on page 16-14.

Figure 16-5. Free Block Queue Elements Screen, Extended Private Area

```
 Abend-AID for CICS ---- Free Block Queue Elements ------ Row 000001 of 000003
COMMAND ===>                                                  SCROLL ===> DATA

Total free storage (K)...... 1,789,500 Free Below High User (K)... 0
Maximum Address............. 7FFFFFFF Free from User to Limit (K) 0
Low MVS Page Address........ 7F68C000 Free from Limit to MVS (K). 1,789,488
User Region Limit Address.... 122FFFFF Free Between User & MVS (K) 1,789,488
High User Region Address..... 122FFFFF Free Above Low MVS (K)..... 12

FBQE      Start of  End of    Size of
Address   Area      Area      Area        Location
********  ********  ********  **********  **********************************
7F765778  12300000  7F68BFFF  1,789,488K  Between High User Region & Low MVS
7F697358  7F68E000  7F68EFFF          4K  Above the Low MVS Page Address
7F697478  7F691000  7F692FFF          8K  Above the Low MVS Page Address
****************************** BOTTOM OF DATA *********************************
```

The Free Block Queue Elements screen displays all the blocks of unallocated storage in the extended private area. The first free block starts at 12300000 to 7F68BFFF for 1,789,488K, which means that the only free blocks are above the limit of the extended user region. In other words, the entire extended user region is allocated. Note that the Free from User to Limit (K) field in the header is 0, which could mean that the extended user region limit needs to be increased. Note also that the Free from Limit to MVS (K) field is 1,789,488K. Therefore, the extended user limit could be increased if necessary.

Press the End (PF3) key to return to the Private Area Summary screen. Use the cursor-point-and-shoot feature and press Enter at the Yes displayed in the Free Blocks Available field under the Private Area section to display the Free Block Queue Elements screen for the private area, as shown in Figure 16-6.

Figure 16-6. Free Block Queue Elements Screen, Private Area

```
 Abend-AID for CICS ----- Free Block Queue Elements ----- Row 000001 of 000002
COMMAND ===>                                                SCROLL ===> DATA

Total free storage (K)...... 548       Free Below High User (K)... 20
Maximum Address............. 008FFFFF Free from User to Limit (K) 0
Low MVS Page Address........ 00899000 Free from Limit to MVS (K). 528
User Region Limit Address.... 00814FFF Free Between User & MVS (K) 528
High User Region Address..... 00814FFF Free Above Low MVS (K)..... 0

FBQE      Start of  End of    Size of
Address   Area      Area      Area        Location
********  ********  ********  **********  **********************************
7F69FEF8  0080F000  00813FFF         20K  Below the High User Region Address
7F765448  00815000  00898FFF        528K  Between High User Region & Low MVS
****************************** BOTTOM OF DATA *********************************
```

The first free block starts at 0080F000 to 00813FFF with a size of 20K. Although the user region has some unallocated storage remaining, this amount is not enough to satisfy the GETMAIN request for 32K. There is another free block from 00815000 to 00898FFF of 528K, but it is above the user region limit. This block corresponds with the 00899000 in the Low MVS Page Address field displayed in the private area section of the Private Area Summary screen.

From the Free Block Queue Elements screen for the private areas, note that there is only 20K available in the user region below 16 megabytes, and there is nothing available in the extended user region. The GETMAIN for subpool 55 of 32K failed for this reason. The next step is to determine what subpool(s) in the user region(s) if any are excessively allocated, or if the user region limit(s) needs to be increased. If there are excessive allocations, the owner/allocator needs to be identified.

Press the END (PF3) key to return to the Private Area Summary screen. From this screen, use the cursor point-and-shoot feature and press Enter at the List field in the header to display the Allocated Private Subpools screen, as shown in Figure 16-7 on page 16-7. Alternatively, you can enter the PVTSP fast-path command on the command line of any Abend-AID for CICS screen once you've selected a region dump.

Figure 16-7. Allocated Private Subpools Screen

```
 Abend-AID for CICS ---- Allocated Private Subpools ----- Row 000001 of 000139
COMMAND ===>                                                SCROLL ===> DATA
                                                                         ==>
Private Size (Kbytes)....................... 9,196
Extended Private Size (Kbytes)............. 1,831,936
Total Private Allocated (Kbytes)........... 8,604
Total Extended Private Allocated (Kbytes)... 33,936

To view a summary of these subpools select Summarize
To view user region subpools select User Region
To view scheduler work area subpools select SWA
To view authorized user key subpools select Authorized

                    TCB       Allocated   Percent of   Allocated   Percent of
Id   Key  Ownership  Address   <16Mb       Total <16Mb  >16Mb       Total >16Mb
***  ***  *********  ********  **********  ***********  **********  ***********
229    0  OWN        008FE1B8          0K      0.000           0K      0.000
229    1  OWN        008FE1B8          0K      0.000          28K      0.083
229    5  OWN        008FE1B8          0K      0.000         136K      0.401
229    8  OWN        008FE1B8          0K      0.000          32K      0.094
230    0  OWN        008FE1B8          4K      0.046          32K      0.094
230    1  OWN        008FE1B8         28K      0.325          40K      0.118
230    2  OWN        008FE1B8          4K      0.046           8K      0.024
230    3  OWN        008FE1B8          4K      0.046           8K      0.024
```

The Allocated Private Subpools screen displays a list of allocated subpools that are chained off each task control block (TCB) found in the address space. The TCBs are processed in the order found on the TCB Summary screen. The LSQA subpools do not appear on this screen because they are not chained off the TCB. They are found from the AQATINDX and AQAT control blocks. However, the SWA and authorized user key subpools are chained off the TCB and appear here. Because it was previously determined that the user regions were constrained, use the cursor point-and-shoot feature and press Enter at the User Region field in the header to display the Allocated Private Subpools screen for the user region subpools only, as shown in Figure 16-8.

Figure 16-8. Allocated Private Subpools Screen for User Regions

```
 Abend-AID for CICS ---- Allocated Private Subpools ----- Row 000001 of 000043
COMMAND ===>                                                SCROLL ===> DATA
                                                                         ==>
Private Size (Kbytes)....................... 9,196
Extended Private Size (Kbytes)............. 1,831,936
Total Private Allocated (Kbytes)........... 8,604
Total Extended Private Allocated (Kbytes)... 33,936

To view a summary of these subpools select Summarize
To view scheduler work area subpools select SWA
To view authorized user key subpools select Authorized

                    TCB       Allocated   Percent of   Allocated   Percent of
Id   Key  Ownership  Address   <16Mb       Total <16Mb  >16Mb       Total >16Mb
***  ***  *********  ********  **********  ***********  **********  ***********
  0    0  OWN,SHR    008FDE28          0K      0.000           0K      0.000
  0    8  OWN,SHR    008EC9B0         52K      0.604       1,396K      4.114
252    0  OWN        008EC9B0          0K      0.000           0K      0.000
  0    8  SHR        008C9BF8
  8    8  OWN        008C9BF8          0K      0.000           0K      0.000
131    8  OWN        008C9BF8          0K      0.000           0K      0.000
132    1  OWN        008C9BF8          0K      0.000           0K      0.000
132    5  OWN        008C9BF8          0K      0.000           0K      0.000
132    8  OWN        008C9BF8         24K      0.279         108K      0.318
```

This screen lists the total allocations for a subpool only if it is owned (OWN or OWN,SHR), but not if it is shared (SHR). Incorrect calculations would otherwise result because the descriptor queue elements (DQEs) would be counted more than once. If you select a subpool that is SHR only, the Private Subpool Detail screen displays with the owning TCB address in the header as well as the DQEs and FQEs as if the subpool of the owning TCB had been selected. User region subpools can be summarized since a subpool can appear more than once whether it is owned exclusively or shared with other TCBs. On the Allocated Private Subpools screen, use the cursor point-and-shoot feature and press Enter at the Summarize field to display the Summarized Private Subpools screen, as shown in Figure 16-9.

Figure 16-9. Summarized Private Subpools

```
 Abend-AID for CICS ---- Summarized Private Subpools ---- Row 000001 of 000015
COMMAND ===>                                                 SCROLL ===> DATA

Private Size (Kbytes)....................... 9,196
Extended Private Size (Kbytes)............. 1,831,936
Total Private Allocated (Kbytes)........... 8,604
Total Extended Private Allocated (Kbytes)... 33,936

     Allocated   Percent of   Allocated   Percent of   Total       Percent of
Id   <16Mb       Total <16Mb  >16Mb       Total >16Mb  Allocated   <16M + >16M
***  **********  ***********  **********  ***********  **********  ***********
  0         52K      0.604        1,396K      4.114        1,448K      3.404
  1          4K      0.046           0K      0.000            4K      0.009
  2          4K      0.046          20K      0.059           24K      0.056
  3          4K      0.046          16K      0.047           20K      0.047
  8          0K      0.000           0K      0.000            0K      0.000
 55      1,948K     22.641      12,292K     36.221       14,240K     33.474
 66          4K      0.046           4K      0.012            8K      0.019
 82          0K      0.000         512K      1.509          512K      1.204
 97          0K      0.000          20K      0.059           20K      0.047
100          0K      0.000         544K      1.603          544K      1.279
127          0K      0.000           0K      0.000            0K      0.000
131          0K      0.000           0K      0.000            0K      0.000
132         24K      0.279         108K      0.318          132K      0.310
```

You can sort the Summarized Private Subpools screen by any of the columns. However, because the extended area is used first for GETMAINs with LOC=ANY, sort the screen by the Allocated > 16Mb column to show what subpool is using the most amount of extended user region. Enter the SORT primary command or type SORT on the command line and press Enter at the Allocated > 16 Mb column heading. Enter the BOTTOM primary command or type MAX and press the DOWN (PF8) key to scroll to the bottom of the data, as shown in Figure 16-10 on page 16-9. Note that subpool 252 has the most allocated.

Figure 16-10. Summarized Private Subpools Screen, Sorted and Scrolled Down

```
 Abend-AID for CICS ---- Summarized Private Subpools ---- Row 000004 of 000015
COMMAND ===>                                                SCROLL ===> DATA

Private Size (Kbytes)....................... 9,196
Extended Private Size (Kbytes)............. 1,831,936
Total Private Allocated (Kbytes)........... 8,604
Total Extended Private Allocated (Kbytes)... 33,936

     Allocated   Percent of   Allocated   Percent of   Total       Percent of
Id   <16Mb       Total <16Mb  >16Mb       Total >16Mb  Allocated   <16M + >16M
***  **********  ***********  **********  ***********  **********  ***********
127          0K      0.000           0K      0.000           0K      0.000
 66          4K      0.046           4K      0.012           8K      0.019
  3          4K      0.046          16K      0.047          20K      0.047
  2          4K      0.046          20K      0.059          24K      0.056
 97          0K      0.000          20K      0.059          20K      0.047
132         24K      0.279         108K      0.318         132K      0.310
 82          0K      0.000         512K      1.509         512K      1.204
100          0K      0.000         544K      1.603         544K      1.279
  0         52K      0.604       1,396K      4.114       1,448K      3.404
251      1,296K     15.063       5,288K     15.582       6,584K     15.477
 55      1,948K     22.641      12,292K     36.221      14,240K     33.474
252      4,900K     56.950      12,568K     37.034      17,468K     41.063
****************************** BOTTOM OF DATA ********************************
```

Press the END (PF3) key to return to the Allocated Private Subpools screen for user regions only. Enter the **SORT** primary command, or type **SORT** on the command line and press Enter at the Allocated > 16 Mb column heading. Enter the **BOTTOM** primary command, or type **MAX** on the command line and press the DOWN (PF8) key to scroll to the bottom of the data, as shown in Figure 16-11.

Figure 16-11. Allocated Private Subpools Screen, Sorted and Scrolled Down

```
 Abend-AID for CICS ---- Allocated Private Subpools ----- Row 000036 of 000043
COMMAND ===>                                                SCROLL ===> DATA
                                                                         ==>
Private Size (Kbytes)....................... 9,196
Extended Private Size (Kbytes)............. 1,831,936
Total Private Allocated (Kbytes)........... 8,604
Total Extended Private Allocated (Kbytes)... 33,936

To view a summary of these subpools select Summarize
To view scheduler work area subpools select SWA
To view authorized user key subpools select Authorized

                     TCB       Allocated   Percent of   Allocated   Percent of
Id   Key  Ownership  Address   <16Mb       Total <16Mb  >16Mb       Total >16Mb
***  ***  *********  ********  **********  ***********  **********  ***********
132    8  OWN        008C9BF8         24K      0.279         108K      0.318
 82    8  OWN        008C9A60          0K      0.000         512K      1.509
100    8  OWN,SHR    008B2748          0K      0.000         544K      1.603
  0    8  OWN,SHR    008EC9B0         52K      0.604       1,396K      4.114
 55    8  OWN        008C97D0      1,948K     22.641       4,100K     12.082
251    8  OWN        008C9BF8      1,296K     15.063       5,288K     15.582
 55    8  OWN        008C9A60          0K      0.000       8,192K     24.140
252    0  OWN        008C9BF8      4,900K     56.950      12,568K     37.034
****************************** BOTTOM OF DATA ********************************
```

Use the cursor point-and-shoot feature and press Enter at 252 to display the Private Subpool Detail screen for this subpool. Press the RIGHT PF(11) key to display the right-most portion of the screen, as shown in Figure 16-12 on page 16-10.

Figure 16-12. Private Subpool Detail Screen

```
 Abend-AID for CICS ------ Private Subpool Detail ------- Row 000001 of 000096
COMMAND ===>                                                SCROLL ===> DATA
                                                                     <==
Subpool..................... 252      SPQA Address................ 7FF15640
Key......................... 0        Allocated <16Mb (Kbytes).... 4,900
SPQE Address................ 7F765388 Allocated >16Mb (Kbytes).... 12,568
TCB Address................. 008C9BF8 Total Allocated (Kbytes).... 17,468
Ownership................... OWN      Free <16Mb.................. 7,440
                                      Free >16Mb.................. 36,528
                                      Total Free.................. 43,968

DQE       Backing   Area      Size   Data
Address   Storage   Address   Area   Address   First 32 Bytes of Data
********  ********  ********  *****  ********  ********************************
7F6EC268  BELOW     00008000    192  000080C0  CIPT.....FP .   .. ...  l.  .....
7F735DA8  BELOW     0001A000  1,592  0001A638  *DFHASV  . w 0410I    UN64737  .
7F765C88  BELOW     0001B000         0001B000  CIST.  ......  l.. _.."{ CF.TECH
7F6D7070  BELOW     0001F000  1,888  0001F760   00   IGZECIC  .C24.003/20/95 12
7F7359E8  ANYWHERE  0000D000  3,768  0000DEB8  ... ..   .....  ..  ........ &
7F7656B8  ANYWHERE  00080000         00080000  . >MODHEAD P.410DFHDUIO 06/27/95
7F6EC430  ANYWHERE  001C0000         001C0000  DFHYA160 0.  00. 00  00} 00  00
7F6D7280  ANYWHERE  10300000         10300000  . >MODHEAD P.410DFHKEDCL10/11/96
7F735640  ANYWHERE  103FB000         103FB000  .... ?"   $8 ?a   .    }.. .   }
                                  24 103FB5E8    .   {q.. .  {q. .........4.3 Q
```

Not only is the DQE and FQE information displayed, but as an aid in attempting to determine the ownership of the storage, the first 32 bytes of allocated storage is displayed. Several first 32 bytes for a DQE may exist if there is free storage (FQE) within that DQE. The methods used in displaying the first 32 bytes of data are the following:

- If there is no free area within a DQE, the first 32 bytes are at the start of the DQE, or DQE area address. Data address reflects this.
- If there are FQE(s), there are additional first 32 bytes after each free area as determined by adding FQE area size to FQE area address. Data address reflects this calculation.
- If the free area is at the end of the DQE, << REACHED END OF DQE AREA >> is displayed. Data address is blank.
- If the page on which the allocation is located is not contained in the SDUMP dataset, << STORAGE NOT AVAILABLE >> is displayed.

Looking at these first 32 bytes of data, you see that subpool 252 contains either programs or CICS DSA data. You can select a DSA name on the CICS Environment Summary or the Dynamic Storage Area Summary to determine what subpool the DSAs are in. Refer to "Enhanced Memory Display" on page 16-21 for information about how these screens can be used along with an enhancement to the Memory Display screen.

Press the END (PF3) key to return to the Allocated Private Subpools screen again. Next, use the cursor point-and-shoot feature and press Enter at the subpool with the next most extended storage allocated, subpool 55, to display the associated Private Subpool Detail screen. Press the RIGHT (PF11) key to display the right-most portion of the screen, as shown in Figure 16-13 on page 16-11.

Figure 16-13. Private Subpool Detail Screen, Scrolled Right

```
 Abend-AID for CICS ------ Private Subpool Detail ------- Row 000001 of 000064
COMMAND ===>                                                SCROLL ===> DATA
                                                                     <==
Subpool..................... 55       SPQA Address................ 7F6F9400
Key......................... 8        Allocated <16Mb (Kbytes).... 0
SPQE Address................ 7F6F93E8 Allocated >16Mb (Kbytes).... 8,192
TCB Address................. 008C9A60 Total Allocated (Kbytes).... 8,192
Ownership................... OWN      Free <16Mb.................. 0
                                      Free >16Mb.................. 81,920
                                      Total Free.................. 81,920

DQE       Backing   Area      Size   Data
Address   Storage   Address   Area   Address   First 32 Bytes of Data
********  ********  ********  *****  ********  ********************************
7F6F9418  ANYWHERE  115F7000  1,280  115F7500  >VECTTBY........................
7F6F9448  ANYWHERE  116E1000  1,280  116E1500  >VECTTBY........................
7F6F9478  ANYWHERE  11701000  1,280  11701500  >VECTTBY........................
7F6F94A8  ANYWHERE  11721000  1,280  11721500  >VECTTBY........................
7F6F94D8  ANYWHERE  11741000  1,280  11741500  >VECTTBY........................
7F6F9508  ANYWHERE  11761000  1,280  11761500  >VECTTBY........................
7F6F9538  ANYWHERE  11781000  1,280  11781500  >VECTTBY........................
7F6F9568  ANYWHERE  117A1000  1,280  117A1500  >VECTTBY........................
```

In addition to looking at the first 32 bytes of data, watch for large size DQEs. You can see repeated allocations of 129,792 bytes, just 1,280 bytes less than 128K. All of the allocations have an eyecatcher of >VECTTBY so now you can use the TCB address to identify the owner. However, if the subpool were shared (OWN,SHR) among several TCBs, it wouldn't be so easy to identify the owner. This situation is usually the case with subpool 0.

Press the END (PF3) key to return to the Allocated Private Subpools screen. Note that the TCB address owning subpool 55 is 008C9A60. At the command line, enter the **TCBS** fast-path command to display the TCB Summary screen, as shown in Figure 16-14. Enter the **BOTTOM** primary command, or type **MAX** on the command line and press the DOWN (PF8) key to scroll to bottom of the display, where the TCB address for subpool 55 is located. Note that the program running on that TCB is VENXPGMY. Keep in mind that there may be several programs that run/ran on a TCB, but in the case of a vendor product, they'd usually all be owned by that vendor.

Figure 16-14. TCB Summary Screen

```
 Abend-AID for CICS ------------ TCB Summary ------------ Row 000010 of 000019
COMMAND ===>                                                SCROLL ===> DATA
                                                                       ==>
Job Name................. CCFXC410     Number of TCBs........... 14
Abend Date............... 03JUN2003    Number of RBs............ 19
Abend Time............... 11:42:49

R RTM2 Work Area   S Save Area Trace   G RB Register Contents
E TCB Storage      I EPIE              L TCB Load List

  TCB                RB        RB                      Interrupt  Completion  I
  Address     Abend  Address   Type  Program   Offset  Code       Code        L
  ********    *****  ********  ****  ********  ******  ****       *****       *
                     008CB7D0  PRB   DFHSIP    00CDD2  0001                   2
  008CB498           008CB410  PRB   DFHJCOCP  0000B6  0001                   2
                     008B20C8  PRB   DFHAPSIP  001066  0006                   2
  008B2AC8           008A2378  PRB   DFHSKTSK  000000  0001                   2
  008B2748           008B26C0  PRB   CTCCJCDP  0001CA  0001                   2
  008B2528           008B2460  PRB   CTCCJVUE  0005C2  0001                   2
  008C9A60           008C99C8  PRB   VENXPGMY  0001A6  0001                   2
  008C97D0    <TCB   008FFC10  SVRB                    000C       S878        2
               RB>   008FF928  SVRB                    0033                   2
                     008A0388  PRB   VENXPGMZ  0001A8  0078                   2
  ***************************** BOTTOM OF DATA ********************************
```

Now that the owning TCB is identified, the entry point address is displayed in the hope some copyright information is in the program. Note the data in the Offset column (X'1A6'), and press the RIGHT (PF11) key to display the right-most portion of the screen. Use the cursor point-and-shoot feature and press Enter at the second fullword of the data in the PSW column to display the Storage Disassembly screen, as shown in Figure 16-15.

Figure 16-15. Storage Disassembly Screen

```
 Abend-AID for CICS -------- Storage Disassembly -----------------------------
COMMAND ===>                                                  SCROLL ===> DATA

Address   Offset    Object Code      Mnemonic and Operands
115C7F8E  00000000  47F0 C1C8        B     456(,R12)
115C7F92  00000004  0000             DATA
115C7F94  00000006  D4C1 C9D5 7CF8   NC    2517(194,R12),3320(R7)
115C7F9A  0000000C  F0F0 0000 D4C1   SRP   0(16,R0),1217(R13),0
115C7FA0  00000012  C9D5             DATA  IN
115C7FA2  00000014  7CF8 F2F0        ME    R15,752(R8,R15)
115C7FA6  00000018  0000             DATA
115C7FA8  0000001A  D4C1 C9D5 7CF8   NC    2517(194,R12),3320(R7)
115C7FAE  00000020  F4F0             DATA  40
115C7FB0  00000022  5830 D004        L     R3,4(,R13)
115C7FB4  00000026  50F0 3010        ST    R15,16(,R3)
115C7FB8  0000002A  47F0 C1DC        B     476(,R12)
115C7FBC  0000002E  0000             DATA
115C7FBE  00000030  0070             DATA
115C7FC0  00000032  0000             DATA
115C7FC2  00000034  4203 5800        STC   R0,2048(R3,R5)
115C7FC6  00000038  C1D4             DATA  AM
115C7FC8  0000003A  181D             LR    R1,R13
115C7FCA  0000003C  58F0 C1D8        L     R15,472(,R12)
115C7FCE  00000040  0A78             SVC   120       FREEMAIN
```

Use the cursor point-and-shoot feature and press Enter at the address of the PSW to display the Memory Display. At the command line, enter **-1A6** to move the display back to the EPA, as shown in Figure 16-16.

Figure 16-16. Memory Display Screen

```
 Abend-AID for CICS ----------- Memory Display -------------------------------
COMMAND ===>                                                  SCROLL ===> DATA

                                                        Clip Prev Next Lock
   Start Addr: 115C7F8E Comment:
115C7DE8 area EPVT     sp 251 key 8  offset 00001DE8  0000E218 bytes remain

 Address    Offset    Word 1   Word 2   Word 3   Word 4    Storage
 115C7DE8 -000001A6  47F0F0A2 E5C5D5E7 D7C7D4E8 40F0F64B  * 00sVENXPGMY 06.*
 115C7DF8 -00000196  F0F64BF0 F640D7E3 C660F0F3 F0F6F940  *06.06 PTF-03069 *
 115C7E08 -00000186  F0F661F2 F261F0F0 7CF0F74B F1F85C5C  *06/22/00@07.18***
 115C7E18 -00000176  40E5C5D5 C4D6D940 D7D9D6C4 E4C3E340  * VENDOR PRODUCT *
 115C7E28 -00000166  E8404DC3 5D40F1F9 F6F06BF2 F0F0F040  *Y (C) 1960,2000 *
 115C7E38 -00000156  E5C5D5C4 D6D940E7 40C3D6D9 D74B40E4  *VENDOR X CORP. U*
 115C7E48 -00000146  D5D7E4C2 D3C9E2C8 C5C460D9 C9C7C8E3  *NPUBLISHED-RIGHT*
 115C7E58 -00000136  E240D9C5 E2C5D9E5 C5C440E4 D5C4C5D9  *S RESERVED UNDER*
 115C7E68 -00000126  40E3C8C5 40C3D6D7 E8D9C9C7 C8E340D3  * THE COPYRIGHT L*
 115C7E78 -00000116  C1E6E240 D6C640E3 C8C540E4 4BE24B40  *AWS OF THE U.S. *
 115C7E88 -00000106  5C5C90EC D00C18CF 47F0C0B4 00000070  ***  }    0{ ... *
 115C7E98 -000000F6  00004212 5800C0AC 58F0C0B0 1B110A78  *..   .{  0{     *
 115C7EA8 -000000E6  12FF4770 C1EA5010 D00850D0 100418D1  *    A & } &}   J*
 115C7EB8 -000000D6  5080D048 41700001 47F0C0E4 00080000  *&"}   .  0{U. ..*
 115C7EC8 -000000C6  00006472 5800C0DC 58F0C0E0 1B110A78  *..   .{  0{\    *
 115C7ED8 -000000B6  12FF4770 C1BE1841 5040D06C D2074000  *    A   & }%K  .*
```

Looking in the Storage column at the copyright text, you can see that Vendor X owns this module, and it is at release 6.6.0 with a PTF level of 03069 dated 06/22/00. Press the END (PF3) key three times to return to the Allocated Private Subpools screen. Note that there is another subpool 55 allocation, and its TCB address is 008C97D0. Enter the **TCBS** fast-path command to display the TCB Summary screen for this subpool. Enter the **BOTTOM** primary command, or type **MAX** on the command line and press the DOWN (PF8) key to scroll down to the TCB address for this subpool, as shown in Figure 16-17.

Figure 16-17. TCB Summary Screen

```
 Abend-AID for CICS ----------- TCB Summary ------------- Row 000011 of 000019
COMMAND ===>                                                SCROLL ===> DATA
                                                                         ==>
Job Name................. CCFXC410     Number of TCBs........... 14
Abend Date............... 03JUN2003    Number of RBs............ 19
Abend Time............... 11:42:49

R RTM2 Work Area   S Save Area Trace   G RB Register Contents
E TCB Storage      I EPIE              L TCB Load List

  TCB                RB        RB                      Interrupt  Completion  I
  Address     Abend  Address   Type  Program   Offset  Code       Code        L
  ********    *****  ********  ****  ********  ******  ****       *****       *
  008CB498           008CB410  PRB   DFHJCOCP  0000B6  0001                   2
                     008B20C8  PRB   DFHAPSIP  001066  0006                   2
  008B2AC8           008A2378  PRB   DFHSKTSK  000000  0001                   2
  008B2748           008B26C0  PRB   CTCCJCDP  0001CA  0001                   2
  008B2528           008B2460  PRB   CTCCJVUE  0005C2  0001                   2
  008C9A60           008C99C8  PRB   VENXPGMY  0001A6  0001                   2
  008C97D0    <TCB   008FFC10  SVRB                    000C       S0C4        2
               RB>   008FF928  SVRB                    0033                   2
                     008A0388  PRB   VENXPGMZ  0001A8  0078                   2
  ***************************** BOTTOM OF DATA ********************************
```

The TCB Summary screen shows this is program VENXPGMZ, and it's also owned by the same vendor. Enter the **E** (TCB Storage) line command next to the TCB address to display all private area subpools allocated by the TCB, as shown in Figure 16-18. The total amount of storage allocated below, above, and combined by the TCB is shown in the header.

Figure 16-18. Allocated Private Subpools Screen

```
 Abend-AID for CICS ---- Allocated Private Subpools ----- Row 000001 of 000016
COMMAND ===>                                                SCROLL ===> DATA
                                                                         ==>
Private Size (Kbytes)....................... 9,196
Extended Private Size (Kbytes)............... 1,831,936
Total Private Allocated (Kbytes)............ 8,604
Total Extended Private Allocated (Kbytes)... 33,936

Total Allocated to TCB <16Mb (Kbytes)....... 1,980
Total Allocated to TCB >16Mb (Kbytes)....... 4,132
Total Amount Allocated to TCB (Kbytes)...... 6,112

                     TCB       Allocated   Percent of   Allocated   Percent of
Id   Key  Ownership  Address   <16Mb       TCB <16Mb    >16Mb       TCB >16Mb
***  ***  *********  ********  **********  ***********  **********  ***********
229    0  OWN        008C97D0          0K      0.000           0K      0.000
229    5  OWN        008C97D0          0K      0.000           0K      0.000
229    8  OWN        008C97D0         16K      0.808           0K      0.000
229   10  OWN        008C97D0          0K      0.000           0K      0.000
230    0  OWN        008C97D0          4K      0.202           8K      0.194
230    1  OWN        008C97D0          0K      0.000           4K      0.097
230    5  OWN        008C97D0          8K      0.404           4K      0.097
230    8  OWN        008C97D0          4K      0.202           4K      0.097
230   10  OWN        008C97D0          0K      0.000           8K      0.194
```

The vendor needs to determine if this is a normal situation; and if it is, to make recommendations for increasing the limit on user region storage. If it's not normal, then the vendor needs to remedy the situation.

Note: This scenario is only a simulation and VENXPGMY and VENXPGMZ were written to show how Abend-AID for CICS Virtual Storage Analysis can be used in such situations as S878-xx or S80A-xx.

LSQA Analysis

If the over-allocated storage was in MVS high private (LSQA, SWA, or authorized user subpool), it would be difficult to identify the culprit since these subpools are allocated indirectly by calls to system/subsystem services. For example, issuing an ATTACH macro allocates subpool 255 storage for the TCB, or an OPEN macro allocates subpool 230 storage for the DEB. However, the Virtual Storage Map and the Private Area Summary screens indicate if MVS high private is over-allocated.

Select the VSMAP option (1) from the MVS Storage Analysis menu or enter the **VSMAP** fast-path command from any Abend-AID for CICS screen after you've selected the region dump. The Virtual Storage Map is displayed, as shown in Figure 16-19. Note that neither user region had hit the highest allocatable address, yet an 878-10 abend had occurred in this address space. Looking at the Ext Private area, which includes MVS high private, note that it's only 3.049 percent allocated. The Ext User Region does have a limit of 131,584K, but is only 33.375 percent allocated, so there's no problem in extended private.

Figure 16-19. Virtual Storage Map Screen

```
 Abend-AID for CICS ------- Virtual Storage Map --------- Row 000001 of 000021
COMMAND ===>                                               SCROLL ===> DATA

The Ext User Region had not reached the highest allocatable address.
The Ext CSA had no pages converted to Ext SQA.
The CSA had no pages converted to SQA.
The User Region had not reached the highest allocatable address.

                  Starting  Ending    Size of     Total       Percent
Storage Area      Address   Address   Area        Allocated   Allocated
****************  ********  ********  **********  **********  ***********
Ext Private       13100000  7FFFFFFF  1,784,832K     54,420K      3.049
 Ext User Region  13100000  1B17FFFF    131,584K     43,916K     33.375
Ext CSA           0C2C5000  130FFFFF    112,876K     80,084K     70.949
Ext MLPA          00000000  00000000          0K
Ext FLPA          0C2C2000  0C2C4FFF         12K
Ext PLPA          08A3E000  0C2C1FFF     57,872K
Ext SQA           026AD000  08A3DFFF    101,956K    100,724K     98.792
Ext Nuc (R/W)     0165F000  026ACFFF     16,696K
Ext Nuc (R/O)     01000000  0165EFFF      6,524K
- 16Mb Line ----  --------  --------  ----------  ----------  -----------
Nucleus (R/O)     00FD9000  00FFFFFF        156K
Nucleus (R/W)     00FC9000  00FD8FFF         64K
SQA               00CDE000  00FC8FFF      2,988K      2,988K    100.000
```

Enter the **BOTTOM** primary command, or type **MAX** and press the DOWN (PF8) key to scroll down to display the data for below the line, as shown in Figure 16-20 on page 16-15. Looking at the private area, you'll see that it's 99.462 percent allocated, so the problem is below the line. More importantly, the user region is also limited at 7,680K, yet is only 26.719 percent allocated. This data indicates that the MVS high private is consuming 74.351 percent of the private area (8128K - 2052K = 6076K; 6076K/8172K = 74.351 percent).

Figure 16-20. Virtual Storage Map Screen

```
 Abend-AID for CICS -------- Virtual Storage Map -------- Row 000010 of 000021
COMMAND ===>                                                SCROLL ===> DATA

The Ext User Region had not reached the highest allocatable address.
The Ext CSA had no pages converted to Ext SQA.
The CSA had no pages converted to SQA.
The User Region had not reached the highest allocatable address.

                  Starting  Ending    Size of     Total       Percent
Storage Area      Address   Address   Area        Allocated   Allocated
****************  ********  ********  **********  **********  ***********
- 16Mb Line ----  --------  --------  ----------  ----------  -----------
Nucleus (R/O)     00FD9000  00FFFFFF        156K
Nucleus (R/W)     00FC9000  00FD8FFF         64K
SQA               00CDE000  00FC8FFF      2,988K      2,988K    100.000
PLPA              00BB0000  00CDDFFF      1,208K
FLPA              00BAF000  00BAFFFF          4K
MLPA              00000000  00000000          0K
CSA               00800000  00BAEFFF      3,772K      1,600K     42.418
Private           00005000  007FFFFF      8,172K      8,128K     99.462
 User Region      00005000  00784FFF      7,680K      2,052K     26.719
System Region     00001000  00004FFF         16K
PSA               00000000  00000FFF          4K
****************************** BOTTOM OF DATA ********************************
```

Enter the PVTSUM fast-path command to display the Private Area Summary screen, as shown in Figure 16-21.

Figure 16-21. Private Area Summary Screen

```
 Abend-AID for CICSX -------- Private Area Summary ---------------------------

COMMAND ===>

LDA Address................ 7FF14EB0
Region Size (Kbytes)....... 7,168
To view the local system queue area select LSQA
To view a list of allocated subpools select List

Extended Private Area                  Private Area
Maximum Address............ 7FFFFFFF   Maximum Address............ 007FFFFF
Low MVS Page Address....... 7F532000   User Region Limit Address.. 00784FFF
User Region Limit Address.. 1B17FFFF   Low MVS Page Address....... 0020E000
High User Region Address... 15C69FFF   High User Region Address... 0020DFFF
Starting Address........... 13100000   Starting Address........... 00005000
Maximum Size (Kbytes)...... 1,784,832  Maximum Size (Kbytes)...... 8,172
Limit Size (Kbytes)........ 131,584    Limit Size (Kbytes)........ 7,680
Adjusted Size (Kbytes)..... 131,072    Adjusted Size (Kbytes)..... 7,168
Free Blocks Available...... Yes        Free Blocks Available...... Yes

SM Block Address........... 7F83A000
SM Block Size (Kbytes)..... 7,744
```

The Private Area Summary screen reveals the storage amounts consumed using addresses. Note the sequence of the User Region Limit Address and Low MVS Page Address, indicating that MVS high private storage has gone below the user region limit. Also note that it could go no lower because the high user region address is right up against it, nor could the user region go any higher. However, what is significant is how far below the user region limit address the low MVS page address has gone.

Note: The LDA reports the current top of user region address as 0020E000.

Use the cursor point-and-shoot feature and press Enter at the LSQA field in the header to display the LSQA Summary screen, as shown in Figure 16-22 on page 16-16.

Figure 16-22. LSQA Summary Screen

```
  Abend-AID for CICS ----------- LSQA Summary ------------ Row 000001 of 000004
COMMAND ===>                                                  SCROLL ===> DATA

LDA Address................ 7FF14EB0
To view a summary of LSQA subpools select Summarize

     AQATINDX  +---------- DFE Queue Origins -----------+
Sp   Address   Addr <16M  Addr >16M  Size <16M  Size >16M
***  ********  ****************************************
255  7FF15C00  7FF14400   7FF14460   7FF14400   7FF14460
205  7FF15000  --------   7FF14580   --------   7FF14580
215  7FF15400  --------   7FF14520   --------   7FF14520
225  7FF15800  --------   7FF144C0   --------   7FF144C0
****************************** BOTTOM OF DATA *********************************
```

For a description of the DFE Queue Origins, refer to "SQA Analysis" on page 16-31. Use the cursor point-and-shoot feature and press Enter at the Summarize field in the header to display the Summarized LSQA Subpools screen, as shown in Figure 16-23.

Figure 16-23. Summarized LSQA Subpools Screen

```
 Abend-AID for CICS ----- Summarized LSQA Subpools ------ Row 000001 of 000004
COMMAND ===>                                                  SCROLL ===> DATA

Private Size (Kbytes)........................ 8,172
Extended Private Size (Kbytes)............... 1,784,832
Total LSQA Allocated (Kbytes)................ 5,624
Total Extended LSQA Allocated (Kbytes)...... 1,192

     Allocated   Percent of   Allocated   Percent of   Total       Percent of
Id   <16Mb       Total <16Mb  >16Mb       Total >16Mb  Allocated   <16M + >16M
***  **********  ***********  **********  ***********  **********  ***********
255      5,624K    100.000          292K     24.497        5,916K     86.796
205          0K      0.000          768K     64.430          768K     11.268
215          0K      0.000          120K     10.067          120K      1.761
225          0K      0.000           12K      1.007           12K      0.176
****************************** BOTTOM OF DATA *********************************
```

Note that subpool 255 has 5624K or 92.560 percent of the 6076K MVS high private allocated below 16M. Use the cursor point-and-shoot feature and press Enter at subpool 255 to display the LSQA Subpool Detail screen, as shown in Figure 16-24 on page 16-17.

Figure 16-24. LSQA Subpool Detail Screen

```
 Abend-AID for CICS -------- LSQA Subpool Detail ------------------ Row 000001
COMMAND ===>                                                  SCROLL ===> DATA
                                                                             ==>
Subpool..................... 255      Allocated <16Mb (Kbytes).... 5,624
AQATINDX Address............ 7FF15C00 Allocated >16Mb (Kbytes).... 292
Non-zero AQATINDX Entries... 3        Total Allocated (Kbytes).... 5,916
                                      Free <16Mb................. 363,576
                                      Free >16Mb................. 21,896
                                      Total Free................. 385,472

Page      DFE                 Size of    DFE     AQAT      AQAT    Index   Data
Address   Address   DFE Area  Area       Count   Address   Entry   Entry   Addr
********  ********  ********  *********  ******  ********  ******  ******  ****
0020F000  7F57B748  0020F000        256       1  7FF16314      32       0  0020
00212000  7F57B6A0  00212000        256       1  7FF16314      33       0  0021
00213000  7F57B760  00213000      1,400       1  7FF16314      33       0  0021
00214000  7F57B778  00214000        256       1  7FF16314      33       0  0021
00215000  7F57B790  00215000        256       1  7FF16314      33       0  0021
0021D000  7F57B6E8  0021D000        256       1  7FF16314      33       0  0021
0021E000  7F57B388  0021E000        256       1  7FF16314      33       0  0021
0021F000  7F57B670  0021F000        256       1  7FF16314      33       0  0021
00220000  7F57B5E0  00220000        256       1  7FF16314      34       0  0022
00221000  7F57B688  00221000        256       1  7FF16314      34       0  0022
00222000  7F57B550  00222000        256       1  7FF16314      34       0  0022
```

This screen displays an LSQA page, a DFE address, DFE area, size of area, DFE count (if the LSQA page has free storage), AQAT information, data address (of first 32 bytes), and the first 32 bytes of used storage. Having the first 32 bytes of data for each page may aid in determining what kind of data is being stored in the allocated storage. Press the DOWN (PF8) key several times to display subsequent pages for data allocated above the 16Mb boundary. Press the RIGHT (PF11) key to display the right-most portion of the screen. Enter **RTM2** in the first four positions of the mask line under the First 32 Bytes of Data column heading to display the multiple RTM2 work areas, as shown Figure 16-25.

Figure 16-25. LSQA Subpool Detail Screen, Masked

```
 Abend-AID for CICS -------- LSQA Subpool Detail -------- Row 000001 of 000007
COMMAND ===>                                                  SCROLL ===> DATA
                                                                             <==
Subpool..................... 255      Allocated <16Mb (Kbytes).... 5,624
AQATINDX Address............ 7FF15C00 Allocated >16Mb (Kbytes).... 292
Non-zero AQATINDX Entries... 3        Total Allocated (Kbytes).... 5,916
                                      Free <16Mb................. 363,576
                                      Free >16Mb................. 21,896
                                      Total Free................. 385,472

Page      DFE         AQAT    Index   Data
Address   Address     Entry   Entry   Address   First 32 Bytes of Data
********  ********    ******  ******  ********  RTM2****************************
7F537000  7F5320D0        83     254  7F537050  RTM2"  & .  . " .'  .  h..k"dg".
7F539000  7F57BE80        83     254  7F539050  RTM2"  & .  . " .#`Y.   ..k"dg".
7F53A000  7F57BBF8        83     254  7F53A050  RTM2"  & .  . " .'  .   ..k"dg".
7F574000  7F57B970        87     254  7F574050  RTM2"  & .  . " .#`Y."8 ..k"dg".
7F57C000  7F57B700        87     254  7F57C050  RTM2" {& .  . " .#`Y."9 ..k"dg".
7F5B0000  7F57BE38        91     254  7F5B0050  RTM2"$.& .  . " .#`Y."  ..k"dg".
7F5B2000  7F57BB38        91     254  7F5B2050  RTM2"$ & .  . " .#@0."  ..k" g".
****************************** BOTTOM OF DATA ***********************************
```

Use the cursor point-and-shoot feature and press Enter at the Data Address 7F537050 field to display the RTM2WA on the Memory Display, as shown in Figure 16-26 on page 16-18.

Figure 16-26. Memory Display Screen

```
 Abend-AID for CICS ----------- Memory Display -------------------------------
COMMAND ===>                                                   SCROLL ===> DATA

                                                          Clip Prev Next Lock
   Start Addr: 7F537050 Comment:
7F53706D area EPVT     sp 255        offset 0000006D  00003F93 bytes remain

 Address    Offset    Word 1   Word 2   Word 3   Word 4    Storage
 7F53706D +0000001D  87800000 00000000 00000000 00000000  *g".............*
 7F53707D +0000002D  00000000 7D212800 21388800 FBFA3081  *....'  .  h.   a*
 7F53708D +0000003D  4648B284 87800000 00000000 E192807F  *   dg".......k""*
 7F53709D +0000004D  F1300000 00000500 00000400 00087800  *1 .... ... ..  .*
 7F5370AD +0000005D  00001001 463D907F 5388A012 BD998881  *..      " h   rha*
 7F5370BD +0000006D  4648B27F F1300881 4648B200 00001007  *   "1  a   ...  *
 7F5370CD +0000007D  0C100081 4648C400 02000D00 00000000  *  .a  D. . .....*
 7F5370DD +0000008D  00000000 00000000 00000000 00000000  *................*
 7F5370ED +0000009D  00000000 00000000 00000000 00000000  *................*
 7F5370FD +000000AD  00000000 00000010 04000100 00000000  *.......  . .....*
 7F53710D +000000BD  00000000 0000007F 71020000 00000100  *......."  .... .*
 7F53711D +000000CD  213E5000 00000000 00000000 00000000  *  &.............*
 7F53712D +000000DD  00000000 00000000 00000000 00000000  *................*
 7F53713D +000000ED  00000000 00000000 00000000 00000000  *................*
 7F53714D +000000FD  00000000 00000000 00000000 00000000  *................*
 7F53715D +0000010D  0000007F 53761800 0000007F 53770800  *..."   ...."   .*
```

Enter **+1D** at the command line. The RTM2CC at +1D indicates an 878 abend, as do all the other RTM2 work areas listed after masking for RTM2. Because there were seven 878 abends, look at IEAVMSGS in the nucleus. Enter the **NUCMAP** fast-path command on the command line to display the Nucleus Map screen, as shown Figure 16-27.

Figure 16-27. Nucleus Map Screen

```
 Abend-AID for CICS ------------ Nucleus Map ---------------------- Row 000001
COMMAND ===>                                                   SCROLL ===> DATA

 NUCMAP Address........................ 01649470
 Nucleus suffix (IEANUC0x)............ 1
 Number of Read/Write CSECTs........... 76
 Number of Read Only CSECTs............ 87
 Number of Ext Read Only CSECTs........ 1,614
 Number of Ext Read/Write CSECTs....... 121

Entry     CSECT     CSECT
Point     Name      Length    Amode  Storage Area
********  ********  ********  *****  ****************
00FC9000  IGC217    000000B0  24     Nucleus (R/W)
00FC90B0  IGC238    00000AA8  24     Nucleus (R/W)
00FC9B58  IGC241    000000E0  24     Nucleus (R/W)
00FC9C38  IGC243    00000088  24     Nucleus (R/W)
00FC9CC0  IGC251    00000AA8  24     Nucleus (R/W)
00FCA768  IECVDDT7  0000004C  24     Nucleus (R/W)
00FCA7B8  IECVOPTB  00000118  24     Nucleus (R/W)
00FCA8D0  IECVPRNT  000004F8  31     Nucleus (R/W)
00FCADC8  IRDVDDT   00000048  24     Nucleus (R/W)
00FCAE10  CBROPDDT  0000004C  24     Nucleus (R/W)
00FCAE60  IECVDDTR  0000021C  24     Nucleus (R/W)
```

Next, enter **IEAVMSGS** in the mask line under the CSECT Name column heading to locate IEAVMSGS. Use the cursor point-and-shoot feature and press Enter at the Entry Point address to display the Memory Display screen, starting at 01686858, as shown in Figure 16-28 on page 16-19.

Figure 16-28. Memory Display Screen

```
 Abend-AID for CICS ----------- Memory Display -------------------------------
COMMAND ===>                                                   SCROLL ===> DATA

                                                          Clip Prev Next Lock
   Start Addr: 01686858 Comment:
01686858 area ENUC-R/W Mod IEAVMSGS  offset 00000000  000002D8 bytes remain

 Address    Offset    Word 1   Word 2   Word 3   Word 4    Storage
 01686858 +00000000  01686B2C 00E19280 007B79E8 00FEBF80  *  , ..k".#`Y.  "*
 01686868 +00000010  00050878 10000000 00E19280 007B79E8  *.    .....k".#`Y*
 01686878 +00000020  007B79E8 00141200 00008170 00000000  *.#`Y.  ...a ....*
 01686888 +00000030  00000000 00E19280 007B7CF0 00FEBF80  *......k".#@0.  "*
 01686898 +00000040  00050878 10000000 00E19280 007B7CF0  *.    .....k".#@0*
 016868A8 +00000050  007B7CF0 007F1200 000049C0 00000000  *.#@0." ... {....*
 016868B8 +00000060  00000000 00E19280 007B79E8 00FEBF80  *......k".#`Y.  "*
 016868C8 +00000070  00050878 10000000 00E19280 007B79E8  *.    .....k".#`Y*
 016868D8 +00000080  007B79E8 00E51200 000009D8 00000000  *.#`Y.V ... Q....*
 016868E8 +00000090  00000000 00E19280 007B79E8 8A4F14D4  *......k".#`Y | M*
 016868F8 +000000A0  00050878 10000000 00E19280 007B79E8  *.    .....k".#`Y*
 01686908 +000000B0  007B79E8 00E61200 00002000 00000000  *.#`Y.W ... .....*
 01686918 +000000C0  00000000 00E19280 007D2128 00FEBF80  *......k".'  .  "*
 01686928 +000000D0  00050878 10000000 00E19280 007D2128  *.    .....k".'  *
 01686938 +000000E0  007D2128 00E61200 00002000 00000000  *.'  .W ... .....*
 01686948 +000000F0  00000000 00E19280 007B79E8 811F4BE8  *......k".#`Ya .Y*
```

Each entry of the IEA705I message variables is x'30' bytes long. Examining the contents of each entry using the IBM OS/390 MVS system messages manual indicates GETMAIN failures for subpools 20, 127, 229, 230, 230, and 229, all below 16M. Although examining IEAVMSGS may be helpful, it doesn't always indicate the subpool that is over-allocated.

Press the END (PF3) key three times to return to the masked LSQA Subpool Detail screen. Enter the **RESET** primary command on the command line to reset the masking and to redisplay all of the pages. Press the LEFT (PF10) key to display the left-most portion of the screen, as shown in Figure 16-29.

Figure 16-29. LSQA Subpool Detail Screen

```
  Abend-AID for CICS -------- LSQA Subpool Detail -------- Row 000001 of 001479
COMMAND ===>                                                 SCROLL ===> DATA
                                                                          ==>
Subpool..................... 255      Allocated <16Mb (Kbytes).... 5,624
AQATINDX Address............ 7FF15C00 Allocated >16Mb (Kbytes).... 292
Non-zero AQATINDX Entries... 3        Total Allocated (Kbytes).... 5,916
                                      Free <16Mb................. 363,576
                                      Free >16Mb................. 21,896
                                      Total Free................. 385,472

Page      DFE                 Size of    DFE     AQAT      AQAT    Index   Data
Address   Address   DFE Area  Area       Count   Address   Entry   Entry   Addr
********  ********  ********  *********  ******  ********  ******  ******  ****
0020F000  7F57B748  0020F000        256       1  7FF16314      32       0  0020
00212000  7F57B6A0  00212000        256       1  7FF16314      33       0  0021
00213000  7F57B760  00213000      1,400       1  7FF16314      33       0  0021
00214000  7F57B778  00214000        256       1  7FF16314      33       0  0021
00215000  7F57B790  00215000        256       1  7FF16314      33       0  0021
0021D000  7F57B6E8  0021D000        256       1  7FF16314      33       0  0021
0021E000  7F57B388  0021E000        256       1  7FF16314      33       0  0021
0021F000  7F57B670  0021F000        256       1  7FF16314      33       0  0021
00220000  7F57B5E0  00220000        256       1  7FF16314      34       0  0022
00221000  7F57B688  00221000        256       1  7FF16314      34       0  0022
00222000  7F57B550  00222000        256       1  7FF16314      34       0  0022
```

Scrolling down the list of allocated pages, note that many have a DFE area address at the beginning with an area size equal to 256. Enter **256** in the last three positions of the mask line under the Size of Area column heading to reveal that 1354 out of 1479 pages have the first 256 bytes free, a suspicious pattern, as shown Figure 16-30.

Figure 16-30. LSQA Subpool Detail Screen, Masked

```
  Abend-AID for CICS -------- LSQA Subpool Detail -------- Row 000001 of 001354
COMMAND ===>                                                SCROLL ===> DATA
                                                                         ==>
Subpool..................... 255      Allocated <16Mb (Kbytes).... 5,624
AQATINDX Address............ 7FF15C00 Allocated >16Mb (Kbytes).... 292
Non-zero AQATINDX Entries... 3        Total Allocated (Kbytes).... 5,916
                                      Free <16Mb................. 363,576
                                      Free >16Mb................. 21,896
                                      Total Free................. 385,472

Page      DFE                 Size of    DFE     AQAT      AQAT    Index   Data
Address   Address   DFE Area  Area       Count   Address   Entry   Entry   Addr
********  ********  ********  ******256  ******  ********  ******  ******  ****
0020F000  7F57B748  0020F000       256       1  7FF16314      32       0  0020
00212000  7F57B6A0  00212000       256       1  7FF16314      33       0  0021
00214000  7F57B778  00214000       256       1  7FF16314      33       0  0021
00215000  7F57B790  00215000       256       1  7FF16314      33       0  0021
0021D000  7F57B6E8  0021D000       256       1  7FF16314      33       0  0021
0021E000  7F57B388  0021E000       256       1  7FF16314      33       0  0021
0021F000  7F57B670  0021F000       256       1  7FF16314      33       0  0021
00220000  7F57B5E0  00220000       256       1  7FF16314      34       0  0022
00221000  7F57B688  00221000       256       1  7FF16314      34       0  0022
00222000  7F57B550  00222000       256       1  7FF16314      34       0  0022
00223000  7F57B580  00223000       256       1  7FF16314      34       0  0022
```

Press the RIGHT (PF11) key to display the right-most portion of the screen. Use the cursor point-and-shoot feature and press Enter at 0020F100 in the Data Address column to display the Memory Display, as shown in Figure 16-31.

Figure 16-31. Memory Display Screen

```
  Abend-AID for CICS ----------- Memory Display -------------------------------
 COMMAND ===>                                                SCROLL ===> DATA

                                                         Clip Prev Next Lock
    Start Addr: 0020F100 Comment:
 0020F100 area PVT      sp 255        offset 00000100  00000F00 bytes remain

  Address    Offset    Word 1   Word 2   Word 3   Word 4    Storage
  0020F100 +00000000  0020F130 134D8E1A 10000000 8065A098  *. 1  (   ..."  q*
  0020F110 +00000010  0380DB00 0020F118 00C00000 00000000  * " .. 1 .{......*
  0020F120 +00000020  00000000 1590ED20 00000000 7F6F6158  *....    ...."?/ *
  0020F130 +00000030  0020F160 134D8E1A 10000000 8065A098  *. 1- (   ..."  q*
  0020F140 +00000040  0380DB00 0020F148 00C00000 00000000  * " .. 1 .{......*
  0020F150 +00000050  00000000 1590ED20 00000000 7F6F6158  *....    ...."?/ *
  0020F160 +00000060  0020F190 134D8E1A 10000000 8065A098  *. 1  (   ..."  q*
  0020F170 +00000070  0380DB00 0020F178 00C00000 00000000  * " .. 1 .{......*
  0020F180 +00000080  00000000 1590ED20 00000000 7F6F6158  *....    ...."?/ *
  0020F190 +00000090  0020F1C0 134D8E1A 10000000 8065A098  *. 1{ (   ..."  q*
  0020F1A0 +000000A0  0380DB00 0020F1A8 00C00000 00000000  * " .. 1y.{......*
  0020F1B0 +000000B0  00000000 1590ED20 00000000 7F6F6158  *....    ...."?/ *
  0020F1C0 +000000C0  0020F1F0 134D8E1A 10000000 8065A098  *. 10 (   ..."  q*
  0020F1D0 +000000D0  0380DB00 0020F1D8 00C00000 00000000  * " .. 1Q.{......*
  0020F1E0 +000000E0  00000000 1590ED20 00000000 7F6F6158  *....    ...."?/ *
  0020F1F0 +000000F0  0020F220 134D8E1A 10000000 8065A098  *. 2  (   ..."  q*
```

At 0020F100 is the address 0020F130; at 0020F130 is 0020F160, and so on. These addresses appear to be a chain of control blocks x'30' in length. At 0020F104 is a pointer (address) into a vendor program. Upon contacting the vendor, they identified it as an ESTAE routine. The chain of control blocks were SCBs created when the vendor repeatedly issued the ESTAE macro without deactivation in between.

Enhanced Memory Display

The enhancement to the Abend-AID for CICS Memory Display allows you to determine the storage subpools of the CICS dynamic storage areas (DSAs). From the command line of any region dump screen, enter **DSA** to display the Dynamic Storage Area Summary screen, as shown in Figure 16-32.

Figure 16-32. Dynamic Storage Area Summary Screen

```
 Abend-AID for CICS --- Dynamic Storage Area Summary ---- Row 000001 of 000008
COMMAND ===>                                                SCROLL ===> DATA

First Task Subpool SCA.... 1151CD7C   First Domain Subpool SCA.... 1152C674
Last Task Subpool SCA..... 1152EAAC   Last Domain Subpool SCA..... 1152D674

  D Domain Subpool Summary

  DSA                Total Pages
  Name    DSA Size   Available
  *****   ********   ********
  CDSA        768K        192
  UDSA        256K         64
  SDSA        256K         64
  RDSA        512K        128
  ECDSA      4096K       1024
  EUDSA      1024K        256
  ESDSA         0K          0
  ERDSA      3072K        768
  ***************************** BOTTOM OF DATA ********************************
```

Use the cursor point-and-shoot feature and press Enter at any of the CICS DSA names to display the Dynamic Storage Area Detail screen, as shown in Figure 16-33.

Figure 16-33. Dynamic Storage Area Detail Screen

```
 Abend-AID for CICS ---- Dynamic Storage Area Detail ---- Row 000001 of 000003
COMMAND ===>                                                SCROLL ===> DATA

DSA Name............ CDSA           Free Page Low Water Mark.... 0
DSA Size (Kilobytes) 768            "NOSTG" Returned Count...... 0
Number of Pages..... 192            Total Number of Suspends.... 0
PPA Address......... 103E9580       Current Number Suspended.... 0
Access.............. CICS           High Water Mark Suspended... 0

Currently SOS....... NO             SOS Cushion Released Count.. 0
SOS Count........... 0              Storage Violation Count..... 0
Time Spent SOS...... 00:00:00.000

 The following extents are allocated to the DSA:

          Start     End
Size      Address   Address
********  ********  ********
    256K  00040000  0007FFFF
    256K  00100000  0013FFFF
    256K  00140000  0017FFFF
***************************** BOTTOM OF DATA ********************************
```

Use the cursor point-and-shoot feature and press Enter at any extent starting address to display the Memory Display screen, as shown in Figure 16-34.

Figure 16-34. Memory Display Screen, Page 1

```
 Abend-AID for CICS ----------- Memory Display -------------------------------
COMMAND ===>                                                   SCROLL ===> DATA

                                                          Clip Prev Next Lock
   Start Addr: 00140000 Comment:
00140000 area PVT      sp 251 key 8  offset 00080000  00080000 bytes remain

 Address    Offset    Word 1   Word 2   Word 3   Word 4    Storage
 00140000 +00000000  5CC4C6C8 D1C3D640 40801400 20F0F4F1  **DFHJC0  " . 041*
 00140010 +00000010  F0C90814 0917E4D8 F0F9F2F7 F8401400  *0I    UQ09278  .*
 00140020 +00000020  58D0021C 58D0D0D0 58D0D014 58D0D008  * }   }}} }}  }} *
 00140030 +00000030  58C0D04C 50E0C034 58E0C010 90FDE010  * {}<&\{  \{   \ *
 00140040 +00000040  D203E00C C0340DB0 4120B388 48020004  *K \ {      h  . *
 00140050 +00000050  58FC01A4 0DEF41F0 06B841E1 00801B00  *   u   0   .." .*
 00140060 +00000060  1B110EE0 5810C010 0DB041A0 BFFE4130  *   \  {         *
 00140070 +00000070  AFFE1891 5870C0D4 58807028 41100232  *   j  {M "      *
 00140080 +00000080  18F14100 937041E0 37020E0E 5810D08C  * 1 .l  \      } *
 00140090 +00000090  D2019374 80589501 80024780 B040D207  *K l " n "  "  K *
 001400A0 +000000A0  93823572 D201938A 93744100 95045000  *lb  K l l  .n &.*
 001400B0 +000000B0  939C4100 938C5000 93A84100 93CC5000  *l  .l &.ly .l &.*
 001400C0 +000000C0  91944100 94345000 91984100 949C5000  *jm .m &.jq .m &.*
 001400D0 +000000D0  919C9280 91A09280 91949280 91989280  *j k"j k"jmk"jqk"*
 001400E0 +000000E0  919C9200 700B9140 70094710 B0A89120  *j k.  j      yj *
 001400F0 +000000F0  80184710 B0C49110 80194710 33AC9118  *"    Dj "     j *
```

Note the line of data below the Start Addr: field in the header. Whatever address is displayed in the Start Addr: field initially is echoed as well as matches the first line under the Address column. If you subsequently enter **+32**, **-210**, and so on, the address on this line is updated to reflect the offset specified following the plus/minus sign (+/-) . The bytes remaining value is also updated, but in the direction opposite the plus/minus sign. For example, if you enter **+23**, the following lines are displayed. The address in this line now echoes the first line under the Address column, but the Start Addr: remains the same as it always has, as shown in Figure 16-35.

Figure 16-35. Memory Display Screen, Page 2

```
 Abend-AID for CICS ----------- Memory Display -------------------------------
COMMAND ===>                                                   SCROLL ===> DATA

                                                          Clip Prev Next Lock
   Start Addr: 00140000 Comment:
00140023 area PVT      sp 251 key 8  offset 00080023  0007FFDD bytes remain

 Address    Offset    Word 1   Word 2   Word 3   Word 4    Storage
 00140023 +00000023  1C58D0D0 D058D0D0 1458D0D0 0858C0D0  *  }}} }}  }}  {}*
 00140033 +00000033  4C50E0C0 3458E0C0 1090FDE0 10D203E0  *<&\{  \{   \ K \*
 00140043 +00000043  0CC0340D B04120B3 88480200 0458FC01  * {      h  .    *
 00140053 +00000053  A40DEF41 F006B841 E100801B 001B110E  *u   0   .." .   *
 00140063 +00000063  E05810C0 100DB041 A0BFFE41 30AFFE18  *\  {            *
 00140073 +00000073  915870C0 D4588070 28411002 3218F141  *j  {M "       1 *
 00140083 +00000083  00937041 E037020E 0E5810D0 8CD20193  *.l  \      } K l*
 00140093 +00000093  74805895 01800247 80B040D2 07938235  * " n "  "  K lb *
 001400A3 +000000A3  72D20193 8A937441 00950450 00939C41  * K l l  .n &.l  *
 001400B3 +000000B3  00938C50 0093A841 0093CC50 00919441  *.l &.ly .l &.jm *
 001400C3 +000000C3  00943450 00919841 00949C50 00919C92  *.m &.jq .m &.j k*
 001400D3 +000000D3  8091A092 80919492 80919892 80919C92  *"j k"jmk"jqk"j k*
 001400E3 +000000E3  00700B91 40700947 10B0A891 20801847  *.  j      yj "  *
 001400F3 +000000F3  10B0C491 10801947 1033AC91 18801A47  *  Dj "     j "  *
 00140103 +00000103  E033AC91 09700947 10B0C447 F033AC95  *\  j      D 0  n*
 00140113 +00000113  49700947 7033A491 18801A47 E033A491  *      uj "  \ uj*
```

If the offset goes past the bytes remaining in the allocation or before the start of the allocation, the subpool/key is updated. For example, if you enter **+7FFF0**, the following line is displayed, as shown in Figure 16-36.

Figure 16-36. Memory Display Screen, Page 3

```
 Abend-AID for CICS ----------- Memory Display -------------------------------
COMMAND ===>                                                   SCROLL ===> DATA

                                                          Clip Prev Next Lock
   Start Addr: 00140000 Comment:
001C0013 area PVT      sp 252 key 0  offset 00000013  0047FFED bytes remain

 Address    Offset    Word 1   Word 2   Word 3   Word 4    Storage
 001C0013 +00080013  0458F0F0 D058F0F0 1458F0F0 0C58FF00  *  00} 00  00   .*
 001C0023 +00080023  0C07FF00 00000000 000000C9 C7E9C3D7  *   ........IGZCP*
 001C0033 +00080033  C3C34042 00C3F2F4 4BF0F0F1 61F0F661  *CC  .C24.001/06/*
 001C0043 +00080043  F9F340F2 F24BF0F9 404040D5 00000000  *93 22.09   N....*
 001C0053 +00080053  00801C4D 08801C48 F0801C47 08801C45  *." ( "  0"   "  *
 001C0063 +00080063  20000000 00000000 00000000 00801C82  * ............" b*
 001C0073 +00080073  58801C50 C0801C0D D8000000 00801C85  * " &{"  Q...." e*
 001C0083 +00080083  38801C34 28000000 00801C40 A8801C21  * "   ...."  y"  *
 001C0093 +00080093  F8000000 00000000 00000000 00000000  *8...............*
 001C00A3 +000800A3  00000000 00000000 00801C7A 28801C79  *........." : " `*
 001C00B3 +000800B3  48801C65 40801C11 08000000 00801C81  * "   "   ...." a*
 001C00C3 +000800C3  60801C59 C0801C55 10801C54 B0000000  *-"  {"   "   ...*
 001C00D3 +000800D3  00000000 00000000 00000000 00801C01  *............."  *
 001C00E3 +000800E3  48000000 00801C7C 78000000 00000000  * ...." @ .......*
 001C00F3 +000800F3  00801C4F 78FFFFFF FFFFFFFF FFFFFFFF  *." |            *
 001C0103 +00080103  FFFFFFFF FFFFFFFF FFFFFFFF FFFFFFFF  *               *
```

If the new address traverses a VSM area, the area is updated. Enter the PVTSUM fast-path command to display the Private Area Summary screen, as shown in Figure 16-37.

Figure 16-37. Private Area Summary Screen

```
 Abend-AID for CICS -------- Private Area Summary ---------------------------
COMMAND ===>

LDA Address................ 7FF15EB0
Region Size (Kbytes)....... 8,192
To view the local system queue area select LSQA
To view a list of allocated subpools select List

Extended Private Area                  Private Area
Maximum Address............ 7FFFFFFF   Maximum Address............ 008FFFFF
Low MVS Page Address....... 7F68C000   Low MVS Page Address....... 00899000
User Region Limit Address.. 122FFFFF   User Region Limit Address.. 00814FFF
High User Region Address... 122FFFFF   High User Region Address... 00814FFF
Starting Address........... 10300000   Starting Address........... 00005000
Maximum Size (Kbytes)...... 1,831,936  Maximum Size (Kbytes)...... 9,196
Limit Size (Kbytes)........ 32,768     Limit Size (Kbytes)........ 8,256
Adjusted Size (Kbytes)..... 32,768     Adjusted Size (Kbytes)..... 8,192
Free Blocks Available...... Yes        Free Blocks Available...... Yes

SM Block Address........... 7F80C000
SM Block Size (Kbytes)..... 7,932
```

Note that the extended private area started at 10300000. Use the cursor point-and-shoot feature and press Enter at this address to display the Memory Display screen, as shown in Figure 16-38.

Figure 16-38. Memory Display Screen, Page 1

```
  Abend-AID for CICS ----------- Memory Display -------------------------------
COMMAND ===>                                                   SCROLL ===> DATA

                                                            Clip Prev Next Lock
   Start Addr: 10300000 Comment:
10300000 area EPVT     sp 252 key 0  offset 00000000  000C6000 bytes remain

 Address    Offset    Word 1   Word 2   Word 3   Word 4    Storage
 10300000 +00000000  00486ED4 D6C4C8C5 C1C403D7 00F4F1F0  *. >MODHEAD P.410*
 10300010 +00000010  C4C6C8D2 C5C4C3D3 F1F061F1 F161F9F6  *DFHKEDCL10/11/96*
 10300020 +00000020  7CF1F44B F4F40001 00000000 E4D5F9F6  *@14.44. ....UN96*
 10300030 +00000030  F4F7F640 FFFFFFFF 00000001 00000400  *476     ... .. .*
 10300040 +00000040  00008000 00000008 07000700 07000700  *.."....  . . . .*
 10300050 +00000050  07000700 07000700 07000700 07000700  * . . . . . . . .*
 10300060 +00000060  07000700 07000700 07000700 07000700  * . . . . . . . .*
 10300070 +00000070  07000700 07000700 07000700 07000700  * . . . . . . . .*
 10300080 +00000080  90EDD00C 183D18E0 98453050 88E00006  *  }    \q  &h\. *
 10300090 +00000090  182089E0 00088920 0002416E 52085892  *  i\. i .  >   k*
 103000A0 +000000A0  523058A0 40305820 904058D0 A0605800  *           } - .*
 103000B0 +000000B0  6010418D 20005980 402C4720 F0FE50D0  *-     . "    0 &}*
 103000C0 +000000C0  40301F77 91805100 4780F070 9108403C  *    j" . "0 j   *
 103000D0 +000000D0  4710F070 9120403C 4780F064 58706018  *  0 j    "0   - *
 103000E0 +000000E0  47F0F070 91405100 4780F070 58706014  * 00 j  . "0   - *
 103000F0 +000000F0  9023D000 904AD050 50D04018 91025055  *  }. ¢}&&}  j & *
```

Enter **-1** at the command line to display the screen with the VSM area updated to ECSA, as shown in Figure 16-39.

Figure 16-39. Memory Display Screen, Page 2

```
  Abend-AID for CICS ----------- Memory Display -------------------------------
 COMMAND ===>                                                   SCROLL ===> DATA

                                                            Clip Prev Next Lock
    Start Addr: 10300000 Comment:
 102FFFFF area ECSA     sp 241 key 0  offset 00000FFF  00000001 bytes remain

  Address    Offset    Word 1   Word 2   Word 3   Word 4    Storage
  102FFFFF -00000001  0000486E D4D6C4C8 C5C1C403 D700F4F1  *.. >MODHEAD P.41*
  1030000F +0000000F  F0C4C6C8 D2C5C4C3 D3F1F061 F1F161F9  *0DFHKEDCL10/11/9*
  1030001F +0000001F  F67CF1F4 4BF4F400 01000000 00E4D5F9  *6@14.44. ....UN9*
  1030002F +0000002F  F6F4F7F6 40FFFFFF FF000000 01000004  *6476     ... .. *
  1030003F +0000003F  00000080 00000000 08070007 00070007  *..."....  . . . *
  1030004F +0000004F  00070007 00070007 00070007 00070007  *. . . . . . . . *
  1030005F +0000005F  00070007 00070007 00070007 00070007  *. . . . . . . . *
  1030006F +0000006F  00070007 00070007 00070007 00070007  *. . . . . . . . *
  1030007F +0000007F  0090EDD0 0C183D18 E0984530 5088E000  *.  }    \q  &h\.*
  1030008F +0000008F  06182089 E0000889 20000241 6E520858  *   i\. i .  >   *
  1030009F +0000009F  92523058 A0403058 20904058 D0A06058  *k           } - *
  103000AF +000000AF  00601041 8D200059 80402C47 20F0FE50  *.-     . "    0 &*
  103000BF +000000BF  D040301F 77918051 004780F0 70910840  *}    j" . "0 j  *
  103000CF +000000CF  3C4710F0 70912040 3C4780F0 64587060  *   0 j    "0   -*
  103000DF +000000DF  1847F0F0 70914051 004780F0 70587060  *  00 j  . "0   -*
  103000EF +000000EF  149023D0 00904AD0 5050D040 18910250  *   }. ¢}&&}  j &*
```

For an address in the LPA or Nucleus, a module name is displayed. Also note that if the address is not found in the SVC dump dataset, the text is not found in the SDUMP dataset is displayed instead of is not allocated storage because you can now determine if the storage is logically not allocated versus physically not dumped. The new line represents the logical allocation, while the line below the column heading now represents the physical status, as shown in Figure 16-40.

Figure 16-40. Memory Display Screen, Page 3

```
 Abend-AID for CICS ----------- Memory Display -------------------------------
COMMAND ===>                                                  SCROLL ===> DATA

                                                         Clip Prev Next Lock
   Start Addr: 04E2C3C8 Comment:
04E2C3C8 area EPLPA    Mod IGE0025C  offset 00000000  00000C38 bytes remain

 Address    Offset    Word 1   Word 2   Word 3   Word 4    Storage
 04E2C3C8 :065CEFF is not found in the SDUMP dataset
 065CF000 +017A2C38  05F047F0 F01C16C9 C5C6C4C2 F4F0F040  * 0 00  IEFDB400 *
 065CF010 +017A2C48  F0F0F0F2 F740E4E6 F6F7F1F2 F60005C0  *00027 UW67126. {*
 065CF020 +017A2C58  4130CFFF 185F18A1 186041F0 00E65800  *     ¬ ~ - 0.W .*
 065CF030 +017A2C68  3D75B20B 0000B20A 00105800 3D7147F0  *    ..  .  .   0*
 065CF040 +017A2C78  C0280700 00FFFFFF 41100001 131141F0  *{  ..     .    0*
 065CF050 +017A2C88  0FA018E0 54E0C024 19EF4720 C058181D  *   \ \{     {   *
 065CF060 +017A2C98  58F0C050 070005EF 47F0C068 47F0C05C  * 0{& .   0{  0{**
 065CF070 +017A2CA8  065D1244 065D1262 41E00000 0A0A120E  * )   )   \..    *
 065CF080 +017A2CB8  58F0C054 4770C046 18B1181A 180650D0  * 0{   {       &}*
 065CF090 +017A2CC8  B0044220 BE4218F5 18DB5040 B0EC58A0  *       5  &     *
 065CF0A0 +017A2CD8  40005860 A0245070 B0AC181A 1FAABFA7  * . -  &        x*
 065CF0B0 +017A2CE8  101D181A D200B430 10111F00 4300B430  *    K.     . .  *
 065CF0C0 +017A2CF8  1F224320 3C001402 4200B430 91801014  *     .    .  j"  *
 065CF0D0 +017A2D08  47E0C0BC 9680B3D0 47F0C0C0 947FB3D0  * \{ o" } 0{{m" }*
 065CF0E0 +017A2D18  9180B3D0 4770C0CC 54603BBD 50D0B0D4  *j" }  {  -  &} M*
```

If an address lies between allocations, the text not allocated is displayed and the bytes remaining reflects the number of bytes before the next allocation, as shown in Figure 16-41.

Figure 16-41. Memory Display Screen, Page 4

```
 Abend-AID for CICS ----------- Memory Display -------------------------------
COMMAND ===>                                                  SCROLL ===> DATA

                                                         Clip Prev Next Lock
   Start Addr: 04E2C3C8 Comment:
04E2C3C7 area EPLPA    not allocated offset 000003C7  00000001 bytes remain

 Address    Offset    Word 1   Word 2   Word 3   Word 4    Storage
 04E2C3C7 :065CEFF is not found in the SDUMP dataset
 065CF000 +017A2C38  05F047F0 F01C16C9 C5C6C4C2 F4F0F040  * 0 00  IEFDB400 *
 065CF010 +017A2C48  F0F0F0F2 F740E4E6 F6F7F1F2 F60005C0  *00027 UW67126. {*
 065CF020 +017A2C58  4130CFFF 185F18A1 186041F0 00E65800  *     ¬ ~ - 0.W .*
 065CF030 +017A2C68  3D75B20B 0000B20A 00105800 3D7147F0  *    ..  .  .   0*
 065CF040 +017A2C78  C0280700 00FFFFFF 41100001 131141F0  *{  ..     .    0*
 065CF050 +017A2C88  0FA018E0 54E0C024 19EF4720 C058181D  *   \ \{     {   *
 065CF060 +017A2C98  58F0C050 070005EF 47F0C068 47F0C05C  * 0{& .   0{  0{**
 065CF070 +017A2CA8  065D1244 065D1262 41E00000 0A0A120E  * )   )   \..    *
 065CF080 +017A2CB8  58F0C054 4770C046 18B1181A 180650D0  * 0{   {       &}*
 065CF090 +017A2CC8  B0044220 BE4218F5 18DB5040 B0EC58A0  *       5  &     *
 065CF0A0 +017A2CD8  40005860 A0245070 B0AC181A 1FAABFA7  * . -  &        x*
 065CF0B0 +017A2CE8  101D181A D200B430 10111F00 4300B430  *    K.     . .  *
 065CF0C0 +017A2CF8  1F224320 3C001402 4200B430 91801014  *     .    .  j"  *
 065CF0D0 +017A2D08  47E0C0BC 9680B3D0 47F0C0C0 947FB3D0  * \{ o" } 0{{m" }*
 065CF0E0 +017A2D18  9180B3D0 4770C0CC 54603BBD 50D0B0D4  *j" }  {  -  &} M*
```

Common Storage Analysis

Like the private areas, the common storage areas -- common service area (CSA) and system queue area (SQA) -- can also be over-allocated. The anchor block used by VSM for the CSA and SQA is the global data area (GDA). The CSA contains data addressable by all active virtual storage address spaces. The size of the CSA is directly specified. The SQA is like the LSQA except on a global basis. It contains tables and queues relating to the entire system, but unlike the LSQA, its size is directly specified. If the SQA becomes 100 percent allocated, pages are *borrowed* or converted from CSA storage. Such pages are flagged with > for SQA pages converted from CSA, and with < for ESQA pages converted from ECSA. Refer to the discussion of the Allocated Storage Map in "Allocated Storage Map" on page 16-44 for information on how to locate these converted pages. Since a shortage of SQA causes borrowing of CSA, you may also experience a CSA shortage.

The S878 and S80A abend codes also pertain to CSA and SQA, but are indicated using different reason codes. Requests for VSM services that fail due to a common storage shortage are indicated by an SC78 abend code. Ownership of common storage is at the address space level, as opposed to the task (TCB) level for private storage. Identifying ownership requires that common storage tracking be active. The VSM TRACK parameter in the DIAGxx member of SYS1.PARMLIB is used to control common storage tracking.

The SVC dump used in this example was reported as a CSA *storage creep*; that is, CSA storage was being GETMAINed without being FREEMAINed. The best place to start is the Virtual Storage Map, which you can access from the MVS Storage Analysis menu or by entering the **VSMAP** fast-path command from any command line, once you've selected the dump, as shown in Figure 16-42. Enter the **BOTTOM** primary command, or type **MAX** and press the Down (PF8) key to display the data for the CSA that is below the 16 Mb boundary.

Figure 16-42. Virtual Storage Map Screen

```
 Abend-AID for CICS -------- Virtual Storage Map -------- Row 000003 of 000021
COMMAND ===>                                                SCROLL ===> DATA

The Ext User Region had not reached the highest allocatable address.
The Ext CSA had pages converted to Ext SQA.
The CSA had pages converted to SQA.
The User Region had not reached the highest allocatable address.

                  Starting  Ending    Size of     Total       Percent
Storage Area      Address   Address   Area        Allocated   Allocated
****************  ********  ********  **********  **********  ***********
Ext CSA           05597000  0B7FFFFF    100,772K     79,584K     78.974
Ext MLPA          05497000  05596FFF      1,024K
Ext FLPA          05494000  05496FFF         12K
Ext PLPA          02988000  05493FFF     44,080K
Ext SQA           019E4000  02987FFF     16,016K     19,392K    121.079
Ext Nuc (R/W)     0151F000  019E3FFF      4,884K
Ext Nuc (R/O)     01000000  0151EFFF      5,244K
- 16Mb Line ----  --------  --------  ----------  ----------  -----------
Nucleus (R/O)     00FDB000  00FFFFFF        148K
Nucleus (R/W)     00FC8000  00FDAFFF         76K
SQA               00E98000  00FC7FFF      1,216K      1,980K    162.829
PLPA              00C6C000  00E97FFF      2,224K
FLPA              00C69000  00C6BFFF         12K
```

In the header on the Virtual Storage Map, note that both the extended CSA and CSA had pages converted to extended SQA and SQA. From the scrollable area, the extended SQA is at 121.079 percent, and the SQA is at 162.829 percent allocated. Because CSA pages are converted to SQA when required, the percentages of E/SQA can be greater than 100 percent. You need to add these converted pages to the total allocated for extended CSA and CSA to determine the true amounts of extended CSA and CSA allocated.

To determine the number of converted CSA pages, use the cursor point-and-shoot feature and press Enter at either the Ext SQA or SQA field under the Storage Area column, or enter the **SQASUM** fast-path command on any command line to display the SQA Summary screen, as shown in Figure 16-43.

Figure 16-43. SQA Summary Screen

```
 Abend-AID for CICS ------------ SQA Summary ------------ Row 000001 of 000005
COMMAND ===>                                                SCROLL ===> DATA

GDA Address................ 021E41A0
SM Block Address........... 021E4000
SM Block Size (Kbytes)..... 40
SQA Tracking Status........ Active
To view a summary of SQA subpools select Summarize

Extended System Queue Area             System Queue Area
Maximum Address (defined).. 02987FFF   Maximum Address (defined).. 00FC7FFF
Defined Size (Kbytes)...... 16,016     Defined Size (Kbytes)...... 1,216
Starting Address........... 019E4000   Starting Address........... 00E98000
ECSA to ESQA (Kbytes)...... 4,120      CSA to SQA (Kbytes)........ 764

     AQATINDX  +---------- DFE Queue Origins -----------+
Sp   Address   Addr <16M  Addr >16M  Size <16M  Size >16M
***  ********  ******************************************
226  021E73B0  021EAF44   --------   021EAF44   --------
239  021E6FB0  021EAA94   021EACEC   021EAA94   021EACEC
245  021E6BB0  021EA5E4   021EA83C   021EA5E4   021EA83C
247  021E77B0  --------   021EB19C   --------   021EB19C
248  021E7BB0  --------   021EB3F4   --------   021EB3F4
***************************** BOTTOM OF DATA *********************************
```

In the header on the SQA Summary screen, note the amounts of ECSA converted to ESQA and CSA converted to SQA. These may or may not equal the difference between the allocated amounts and sizes of the SQA areas. The amount of extended CSA converted to extended SQA is 4,120K, and the amount of CSA converted to SQA is 764K. Adding 4,120K to the 79,584K allocated to extended CSA gives 83,704K. Dividing that by the size of the extended CSA at 100,772K reveals the extended CSA is 83.063 percent allocated. Adding 764K to the 3,668K allocated to CSA gives 4,432K or 100 percent of the CSA is allocated. What appeared to be a CSA shortage had actually been caused by the borrowing of CSA pages for SQA. Had a true CSA shortage occurred, the amounts of converted CSA would be none at all. The following sections describe ways to determine the SQA allocators and allocations.

Common Storage Users

The address of the global data area (GDA) is displayed in the header on the SQA Summary screen. This area is the VSM anchor block that contains information on system-related virtual storage -- in particular, the SQA and CSA subpools. The SQA tracking status is listed as either Active or Inactive at the time the SVC dump was taken. If Active, a list of address spaces that had allocated SQA is available. Use the cursor point-and-shoot feature and press Enter at the Active field to display the Common Storage Users screen, as shown in Figure 16-44 on page 16-28. You can also use the Common Storage Users screen for a CSA shortage, providing CSA tracking is active. You can also access the Common Storage Users screen from the Common Service Area Summary screen.

Figure 16-44. Common Storage Users Screen

```
 Abend-AID for CICS -------- Common Storage Users ----------------- Row 000001
COMMAND ===>                                                  SCROLL ===> DATA
                                                                            ==>
                      Total CSA     Total SQA    Total ESQA    Total ECSA
System                   18,312       789,056    13,176,976     3,302,432
Active                3,027,288       621,960     5,030,624    72,545,872
Owner Gone              372,400       439,856       509,136     4,399,848
------------------ ------------  ------------  ------------  ------------
Totals from CAUBs     3,418,000     1,850,872    18,716,736    80,248,152
Totals from GDA       3,418,000     1,850,872    18,716,736    80,248,152
Differences                   0             0             0             0

ASID Name     Id        Status   Total CSA  Total ECSA  Status   Total SQA  Tot
**** ******** ********  ******  **********  **********  ******  **********  ***
0000 *SYSTEM*                       18,312   3,302,432             789,056  13,
0000 *UNKNOW*                            0           0                   0
0001 *MASTER*                      127,784   2,200,552             193,104   2,
0002 PCAUTH                              0           0                  80
0003 RASP                                0           0                   0
0004 TRACE                               0           0                   0
0005 DMSAR    STC03675                   0         336                   0
0005 DUMPSRV                             0         144                   0
0006 XCFAS                               0       2,184                 160
0007 GRS                                 0           0                 936
```

In the header, note the summary of the amounts of allocated common storage found in the common area user blocks (CAUBs). It lists amounts for system-owned, for active CAUBs found, and for owner-gone (terminated address space) CAUBs found. The Differences data are the difference between the amounts from the CAUBs and the amounts from fields found in the GDA. The CAUB cell pool address is the first cell (block) of storage that contains the CAUBs, of which there are five types.

- The *system* CAUB describes storage owned by the system, which occurs when it wouldn't be possible or would be misleading to assign ownership to the job running in the home address space. Also, when some operating system components GETMAIN storage, they explicitly indicate that ownership should be assigned to the system.
- An *address space* CAUB describes storage obtained by an initiator address space during the time it is between jobs.
- A *job* CAUB describes storage obtained when the address space in which the job is running is the home address space. These can be further classified as active or gone.
- An *owner gone* CAUB describes storage obtained without being freed before the address space terminated. These are linked together on the "unowned" queue and can futher be classified as job or address space.
- The *no detail* CAUB describes storage that was in use when CSA tracking was being either turned on or off.

Address spaces that allocated CSA and/or SQA are listed in the scrollable area of the screen. By default the screen is sorted by ASID. Any given ASID can appear more than once because ASCBs are reused when address spaces initialize and terminate. The job or started task name from the ASCB is listed, as is the job ID from the JSAB. The job ID is null for entities started under the master scheduler subsystem. The amounts of E/CSA and E/SQA (total) are listed, which you can sort to find address spaces allocating the most of each area. The date (0YYYYDDD) and time (HHMMSSth) of termination are listed for address spaces that terminated without freeing their common storage allocations. You can use the job ID, date/time of termination, along with a system log to determine the reason for termination.

Because the CSA had been 100 percent allocated, the primary concern is SQA and then extended SQA. To locate the address space allocating the most SQA, sort on the Total SQA column heading by entering the **SORT** primary command or typing **SORT** on the command line and pressing Enter at the Total SQA column heading. Because the sort order is low to high, enter the **BOTTOM** primary command, or type **MAX** on the command line and press the DOWN (PF8) key to scroll down to the bottom to see the address spaces using the most SQA, as shown in Figure 16-45.

Figure 16-45. Common Storage Users, Sorted by Total SQA

```
 Abend-AID for CICS ------- Common Storage Users -------- Row 001371 of 001379
COMMAND ===>                                                SCROLL ===> DATA
                                                                         ==>
                      Total CSA     Total SQA    Total ESQA    Total ECSA
System                   18,312       789,056    13,176,976     3,302,432
Active                3,027,288       621,960     5,030,624    72,545,872
Owner Gone              372,400       439,856       509,136     4,399,848
------------------ ------------  ------------  ------------  ------------
Totals from CAUBs     3,418,000     1,850,872    18,716,736    80,248,152
Totals from GDA       3,418,000     1,850,872    18,716,736    80,248,152
Differences                   0             0             0             0

ASID Name     Id        Status   Total CSA  Total ECSA  Status   Total SQA  Tot
**** ******** ********  ******  **********  **********  ******  **********  ***
00B7 PDSM00   STC00413                 368     123,072              15,424
00A3 NETVIEW  STC00312               5,408     132,384              20,824
00C1 CA7ONL   STC01094               6,736       3,216              25,856
00A6 OMIIETE  STC00318                  72      12,352              29,552
0090 MIMSDSI  STC00214               5,568      10,208              55,016
0001 *MASTER*                      127,784   2,200,552             193,104   2,
0122 NPM      STC02207              50,856     669,728             213,056
00AE FXC01    STC00366                   0           0             291,088
0000 *SYSTEM*                       18,312   3,302,432             789,056  13,
***************************** BOTTOM OF DATA ********************************
```

As expected, *SYSTEM* and *MASTER* own most of the storage allocated to the SQA. However, there are two other address spaces with large amounts of SQA allocated. FXC01, which is no longer active, looks suspicious (Abend-AID for CICS?), as does NPM, which is still active. Use the cursor-point-and-shoot feature and press Enter at the ASID field for FXC01 to display the Common Storage Allocations screen, as shown in Figure 16-46.

Figure 16-46. Common Storage Allocations Screen

```
 Abend-AID for CICS ---- Common Storage Allocations ----- Row 000001 of 000107
COMMAND ===>                                                SCROLL ===> DATA
                                                                         ==>
                      Total CSA     Total SQA    Total ESQA    Total ECSA
Totals from GQEs              0       291,088         7,616             0
Totals from CAUB              0       291,088         7,616             0
Differences                   0             0             0             0
CAUB Address................. 0268B3B8
Name of Address Space........ FXC01
Status of Address Space...... Gone

Address   Size        Area  Return    GQE       Date       Time       First 32
********  **********  ****  ********  ********  *********  *********  *********
00EB3000       4,096  SQA   80F4B344  06B5A2C8  31JAN2002   07:48:57  .  . 1 8
00EAF000       4,096  SQA   80F4B344  06B5A340  31JAN2002   07:45:02  . {. ! 8
00835000       4,096  SQA   80F4B344  0831BCA0  31JAN2002   08:10:28  .  . 8 8
00EB6000       4,096  SQA   80F4B344  01ABF148  31JAN2002   07:52:39  .6}. ! 8
00F6D000       4,096  SQA   80F4B344  01ABFAC0  31JAN2002   07:51:23  .  . ! 8
008D1000       4,096  SQA   80F4B344  01AA1B50  31JAN2002   08:09:13  .  . ! 8
00EBC000       4,096  SQA   80F4B344  01AA1F88  31JAN2002   07:43:47  .  . ! 8
00EA9000       4,096  SQA   80F4B344  0672F478  31JAN2002   07:47:33  .7 . ! 8
00907000       4,096  SQA   80F4B344  0672FC28  31JAN2002   08:07:57  .j .   8
00801000       4,096  SQA   80F4B344  07EE9118  31JAN2002   08:12:54  . &.   8
00EA6000       4,096  SQA   80F4B344  07EE98C8  31JAN2002   07:53:54  . -. ! 8
```

The Common Storage Allocations screen displays the individual allocations of E/CSA and E/SQA by the selected address space. This screen is not initially sorted, but can be sorted by address, size, return address, date or time. The header contains information carried over from the Common Storage Users screen, but adds totals for E/CSA and E/SQA found in the GQEs. Use the RIGHT (PF11) key to display the right-most portion of the screen and the first 32 bytes of data, as shown in Figure 16-47.

Figure 16-47. Common Storage Allocations Screen

```
  Abend-AID for CICS ---- Common Storage Allocations ----- Row 000001 of 000107
COMMAND ===>                                                  SCROLL ===> DATA
                                                                      <==
                      Total CSA     Total SQA    Total ESQA    Total ECSA
Totals from GQEs              0       291,088         7,616             0
Totals from CAUB              0       291,088         7,616             0
Differences                   0             0             0             0
CAUB Address................. 0268B3B8
Name of Address Space........ FXC01
Status of Address Space...... Gone

Address   Size        Area  Date    Time       First 32 Bytes of Data
********  **********  ****  ******  *********  ********************************
00EB3000       4,096  SQA   AN2003   07:48:57  .  . 1 8 ...  .MFDCATLGSYSV.CICS
00EAF000       4,096  SQA   AN2003   07:45:02  . {. ! 8 ...  .MFDCATLGSYSV.CICS
00835000       4,096  SQA   AN2003   08:10:28  .  . 8 8 ...  .MFDCATLGSYSV.CICS
00EB6000       4,096  SQA   AN2003   07:52:39  .6}. ! 8 ...  .MFDCATLGSYSV.CICS
00F6D000       4,096  SQA   AN2003   07:51:23  .  . ! 8 ...  .MFDCATLGSYSV.CICS
008D1000       4,096  SQA   AN2003   08:09:13  .  . ! 8 ...  .MFDCATLGSYSV.CICS
00EBC000       4,096  SQA   AN2003   07:43:47  .  . ! 8 ...  .MFDCATLGSYSV.CICS
00EA9000       4,096  SQA   AN2003   07:47:33  .7 . ! 8 ...  .MFDCATLGSYSV.CICS
00907000       4,096  SQA   AN2003   08:07:57  .j .   8 ...  .MFDCATLGSYSV.CICS
00801000       4,096  SQA   AN2003   08:12:54  . &.   8 ...  .MFDCATLGSYSV.CICS
00EA6000       4,096  SQA   AN2003   07:53:54  . -. ! 8 ...  .MFDCATLGSYSV.CICS
```

The first 32 bytes of data column reveals many occurrences of an Abend-AID for CICS shared directory name. The resolution is discussed in the next section, "SQA Analysis" on page 16-31. If SQA tracking had been inactive, you'd need to follow the steps described in that section to determine the problem. That approach is more difficult to determine the offending address space.

Continue by pressing the END (PF3) key to return to the Common Storage Users screen. The amount allocated by address spaces that terminated is generally of concern unless it was intentionally left allocated for other address spaces. To find the address spaces that terminated, press the RIGHT (PF11) key to display the right-most portion of the Common Storage Users screen and enter **gone** in the masking line under the CAUB Type column heading. Enter the **SORT** primary command, or type **SORT** on the command line and press Enter at the TOTAL ESQA column heading. Next, enter the **BOTTOM** primary command, or type **MAX** on the command line and press the DOWN (PF8) key to scroll down to the bottom to display the terminated address spaces leaving the largest amount of ESQA as shown in Figure 16-48 on page 16-31.

Figure 16-48. Common Storage Users Screen, Sorted by Total ESQA

```
 Abend-AID for CICS ------- Common Storage Users -------- Row 001057 of 001065
COMMAND ===>                                                SCROLL ===> DATA
                                                                     <==
                      Total CSA     Total SQA    Total ESQA    Total ECSA
System                   18,312       789,056    13,176,976     3,302,432
Active                3,027,288       621,960     5,030,624    72,545,872
Owner Gone              372,400       439,856       509,136     4,399,848
------------------ ------------  ------------  ------------  ------------
Totals from CAUBs     3,418,000     1,850,872    18,716,736    80,248,152
Totals from GDA       3,418,000     1,850,872    18,716,736    80,248,152
Differences                   0             0             0             0

ASID To  Status   Total SQA  Total ESQA  CAUB      CAUB Type  Date     Time
**** **  ******  **********  **********  ********  GONE****** ******** ********
00AE  0             291,088       7,616  0268B3B8  Gone.. A/S 02003031 04273548
0018 64               3,328       8,160  02492718  Gone.. A/S 02003031 03574058
0055  0                   0       8,192  02492D90  Gone.. Job 02003025 05582000
0022  0                   0       8,448  02506DD8  Gone.. Job 02003025 04472457
00B8  0                 560      14,184  0268B718  Gone.. A/S 02003028 17504867
0057  0              10,280      15,320  0268BB50  Gone.. A/S 02003031 04140523
0090 08              55,016      18,744  0274C958  Gone.. A/S 02003026 01141117
00B0  0               1,296      35,568  0268B490  Gone.. A/S 02003025 01434366
00A6 52              29,552     220,784  0268B130  Gone.. A/S 02003031 04140295
****************************** BOTTOM OF DATA ********************************
```

Sort the display by total SQA by entering the **SORT** primary command or typing **SORT** on the command line and pressing Enter at the Total SQA column heading. Enter the **BOTTOM** primary command, or type **MAX** on the command line and press the DOWN (PF8) key to display the terminated address spaces leaving the largest amount of SQA, as shown in Figure 16-49.

Figure 16-49. Common Storage Users Screen, Sorted by Total SQA

```
 Abend-AID for CICS ------- Common Storage Users -------- Row 001057 of 001065
COMMAND ===>                                                SCROLL ===> DATA
                                                                     <==
                      Total CSA     Total SQA    Total ESQA    Total ECSA
System                   18,312       789,056    13,176,976     3,302,432
Active                3,027,288       621,960     5,030,624    72,545,872
Owner Gone              372,400       439,856       509,136     4,399,848
------------------ ------------  ------------  ------------  ------------
Totals from CAUBs     3,418,000     1,850,872    18,716,736    80,248,152
Totals from GDA       3,418,000     1,850,872    18,716,736    80,248,152
Differences                   0             0             0             0

ASID To  Status   Total SQA  Total ESQA  CAUB      CAUB Type  Date     Time
**** **  ******  **********  **********  ********  GONE****** ******** ********
015F  0               4,096           0  084AF058  Gone.. Job 02002026 00385916
0050  0               4,096           8  086078C8  Gone.. A/S 02002031 04140550
0166  0               4,096         328  084AF5B0  Gone.. Job 02002026 01143073
0069  0               4,096           0  085CF0E8  Gone.. Job 02002026 01572168
0057  0              10,280      15,320  0268BB50  Gone.. A/S 02002031 04140523
007D  0              10,544         752  0268B298  Gone.. A/S 02002031 04140522
00A6 52              29,552     220,784  0268B130  Gone.. A/S 02002031 04140295
0090 08              55,016      18,744  0274C958  Gone.. A/S 02003026 01141117
00AE  0             291,088       7,616  0268B3B8  Gone.. A/S 02003031 04273548
****************************** BOTTOM OF DATA ********************************
```

SQA Analysis

If SQA tracking was not active, you need to examine the SQA allocations by subpool. Press the END (PF3) key to return to the SQA Summary screen. Use the cursor point-and-shoot feature and press Enter at the Summarize field in the header to display the Summarized SQA Subpools screen, as shown in Figure 16-50. The percentages are calculated on the total amount allocated for SQA, ESQA, and SQA+ESQA. They are not calculated on the amounts defined to these areas.

Figure 16-50. Summarized SQA Subpools Screen

```
 Abend-AID for CICS ------ Summarized SQA Subpools ------ Row 000001 of 000005
COMMAND ===>                                                SCROLL ===> DATA

SQA Size (Kbytes)........................... 1,216
Extended SQA Size (Kbytes)................. 16,016
Total SQA Allocated (Kbytes)............... 1,980
Total Extended SQA Allocated (Kbytes)....... 19,392

     Allocated   Percent of   Allocated   Percent of   Total       Percent of
Id   <16Mb       Total <16Mb  >16Mb       Total >16Mb  Allocated   <16M + >16M
***  **********  ***********  **********  ***********  **********  ***********
245      1,540K     77.778       12,568K     64.810       14,108K     66.012
226        244K     12.323            0K      0.000          244K      1.142
239        196K      9.899        3,508K     18.090        3,704K     17.331
247          0K      0.000          436K      2.248          436K      2.040
248          0K      0.000        2,880K     14.851        2,880K     13.476
****************************** BOTTOM OF DATA *********************************
```

Use this screen to narrow down which subpools in SQA have large allocations. This screen shows that subpool 245 is 77.778 percent of total SQA allocated. It would also help to know what are the *normal* allocations for each SQA subpool. Use the cursor point-and-shoot feature and press Enter at any of the subpool numbers under the Id column heading to display the SQA Subpool Detail screen, as shown in Figure 16-51 on page 16-32. You can also display this screen from the SQA Summary screen.

Figure 16-51. SQA Subpool Detail Screen

```
 Abend-AID for CICS --------- SQA Subpool Detail ------------------ Row 000001
COMMAND ===>                                                SCROLL ===> DATA
                                                                         ==>
Subpool..................... 245      Allocated <16Mb (Kbytes).... 1,540
AQATINDX Address............ 021E6BB0 Allocated >16Mb (Kbytes).... 12,568
Non-zero AQATINDX Entries... 17       Total Allocated (Kbytes).... 14,108
                                      Free <16Mb................. 155,168
                                      Free >16Mb................. 1,018,648
                                      Total Free................. 1,173,816

Page      CSA    DFE                Size of    DFE     AQAT      AQAT    Index
Address   Page   Address   DFE Area Area       Count   Address   Entry   Entry
********  *****  ********  ******** *********  ******  ********  ******  *****
00801000  Yes                                      0  021E84A8       0
00826000  Yes    07FC9AF0  00826000     3,072      1  021E84A8       2
00827000  Yes                                      0  021E84A8       2
00828000  Yes                                      0  021E84A8       2
00829000  Yes                                      0  021E84A8       2
0082A000  Yes    07FC9448  0082A000     3,072      1  021E84A8       2
0082B000  Yes                                      0  021E84A8       2
0082C000  Yes                                      0  021E84A8       2
0082D000  Yes                                      0  021E84A8       2
00832000  Yes    08429EB0  00832000       128      4  021E84A8       3
00835000  Yes                                      0  021E84A8       3
```

This screen has the same format as the LSQA Subpool Detail screen shown in Figure 16-24. Another field is added for SQA, the CSA Page indicator. If the page is a converted CSA page, Yes is displayed in this column. Also, it may take longer to display because of the considerably more pages (entries). For this reason, only the first DFE (free area) of each page is displayed. To see additional free areas, use the cursor point-and-shoot feature and press Enter at the DFE Count field to display the DFEs for Specific Page(s) screen, as shown in Figure 16-52 on page 16-33.

Figure 16-52. DFEs for Specific Page(s) Screen

```
 Abend-AID for CICS ----- DFEs for Specific Page(s) -------------------------
COMMAND ===>                                                  SCROLL ===> DATA

Subpool................. 245         Total Free................. 2,648
Subpool Location........ SQA <16M    Page Address............... 00832000

DFE                 Size of    Data
Address   DFE Area  Area       Address   First 32 Bytes of Data
********  ********  *********  ********  ********************************
08429EB0  00832000        128  00832080  ASCB.  ". C......"7 .. "........
09A45DA8  00832400         80  00832450  .   .....................: -....
07686358  008324F8      2,056  00832D00  ASCB.6m".  "....."9.. Q ........
01D47748  00832E80        384  00833000  << REACHED END OF PAGE   >>
****************************** BOTTOM OF DATA ********************************
```

This screen is also the same as for LSQA except that the Subpool Location field reflects SQA. This screen displays the page and all its free areas.

Press the END (PF3) key to return to the SQA Subpool Detail screen. Scroll down using the DOWN (PF8) key, and press the RIGHT (PF11) key to display the right-most portion of the screen. Note the many pages with MFDCATLGSYSV.CICS in the First 32 Bytes of Data column. Entering **MFDCATLG** in the mask line in the same column positions for First 32 Bytes of Data reveals there are 71 such pages in subpool 245, as shown in Figure 16-53.

Figure 16-53. SQA Subpool Detail Screen, Masked

```
 Abend-AID for CICS -------- SQA Subpool Detail --------- Row 000001 of 000071
COMMAND ===>                                                  SCROLL ===> DATA
                                                                        <==
Subpool..................... 245      Allocated <16Mb (Kbytes).... 1,540
AQATINDX Address............ 021E6BB0 Allocated >16Mb (Kbytes).... 12,568
Non-zero AQATINDX Entries... 17       Total Allocated (Kbytes).... 14,108
                                      Free <16Mb................. 155,168
                                      Free >16Mb................. 1,018,648
                                      Total Free................. 1,173,816

Page      CSA    AQ  AQAT    Index   Data
Address   Page   Ad  Entry   Entry   Address   First 32 Bytes of Data
********  *****  **  ******  ******  ********  **************MFDCATLG*********
00801000  Yes    A8       0       1  00801000  . &.   8 ...  .MFDCATLGSYSV.CICS
00835000  Yes    A8       3       1  00835000  .  . 8 8 ...  .MFDCATLGSYSV.CICS
008A9000  Yes    A8      10       1  008A9000  .  . ! 8 ...  .MFDCATLGSYSV.CICS
008AB000  Yes    A8      10       1  008AB000  . \. ! 8 ...  .MFDCATLGSYSV.CICS
008AD000  Yes    A8      10       1  008AD000  .  . r 8 ...  .MFDCATLGSYSV.CICS
008AE000  Yes    A8      10       1  008AE000  .  . ! 8 ...  .MFDCATLGSYSV.CICS
008AF000  Yes    A8      10       1  008AF000  . {. ! 8 ...  .MFDCATLGSYSV.CICS
008B0000  Yes    A8      11       1  008B0000  .k . ! 8 ...  .MFDCATLGSYSV.CICS
008CE000  Yes    A8      12       1  008CE000  .  .   8 ...  .MFDCATLGSYSV.CICS
008D1000  Yes    A8      13       1  008D1000  .  . ! 8 ...  .MFDCATLGSYSV.CICS
008D2000  Yes    A8      13       1  008D2000  . \. ! 8 ...  .MFDCATLGSYSV.CICS
```

Each page has no free areas (DFEs). Press the DOWN (PF8) key once to scroll the display downward. Use the cursor point-and-shoot feature and press Enter at 008D7000 in the Data Address column to display the Memory Display screen, as shown in Figure 16-54.

Figure 16-54. Memory Display Screen for Data Address

```
 Abend-AID for CICS ----------- Memory Display -------------------------------
COMMAND ===>                                                   SCROLL ===> DATA

                                                          Clip Prev Next Lock
   Start Addr: 008D7000 Comment:
008D7000 area SQA >    sp 245        offset 00000000  00002000 bytes remain

 Address    Offset    Word 1   Word 2   Word 3   Word 4    Storage
 008D7000 +00000000  0090C000 0F5A0FF8 06000000 12FE00D4  *. {. ! 8 ...  .M*
 008D7010 +00000010  C6C4C3C1 E3D3C7E2 E8E2E54B C3C9C3E2  *FDCATLGSYSV.CICS*
 008D7020 +00000020  4BC1C1C6 E74BE2C5 D9E5C3F0 F14BE2C8  *.AAFX.SERVC01.SH*
 008D7030 +00000030  D9C4C9D9 40404040 404040E2 C3C3F3F0  *RDIR       SCC30*
 008D7040 +00000040  F30000C4 C5E2C3D9 C9D7E3E2 C8C1D9C4  *3..DESCRIPTSHARD*
 008D7050 +00000050  C4C9D9E2 C8C1D9C4 C4C9D900 00000900  *DIRSHARDDIR... .*
 008D7060 +00000060  00000000 00000000 00000000 00000000  *................*
 008D7070 +00000070  00000000 00000000 00000000 00000000  *................*
 008D7080 +00000080  00000000 00000000 00000000 00000000  *................*
 008D7090 +00000090  00000000 00000000 00000000 00000000  *................*
 008D70A0 +000000A0  00000000 00000000 00000000 00000000  *................*
 008D70B0 +000000B0  00000000 00000000 00000000 00000000  *................*
 008D70C0 +000000C0  00000000 00000000 00000000 00000000  *................*
 008D70D0 +000000D0  00000000 00000000 00000000 00000000  *................*
 008D70E0 +000000E0  00000000 00000000 00000000 00000000  *................*
 008D70F0 +000000F0  00000000 00000000 00000000 00000000  *................*
```

Once the entire page is displayed, it reveals an Abend-AID for CICS enqueue name for the shared directory. Note the SERVC01 in the name, which reflects the FXC01 address space from the Common Storage Users screen that had terminated, leaving SQA storage allocated. This is the reason the SVC dump was reported to Abend-AID for CICS Technical Support. Once it was researched at Compuware, it was determined to be a known problem with a resource serialization product leaving partial enqueue data in SQA.

Enter the **SQASUM** fast-path command to display the SQA Summary screen, as shown in Figure 16-55.

Figure 16-55. SQA Summary Screen

```
 Abend-AID for CICS ------------ SQA Summary ------------ Row 000001 of 000005
COMMAND ===>                                                   SCROLL ===> DATA

GDA Address................ 021E41A0
SM Block Address........... 021E4000
SM Block Size (Kbytes)..... 40
SQA Tracking Status........ Active
To view a summary of SQA subpools select Summarize

Extended System Queue Area             System Queue Area
Maximum Address (defined).. 02987FFF   Maximum Address (defined).. 00FC7FFF
Defined Size (Kbytes)...... 16,016     Defined Size (Kbytes)...... 1,216
Starting Address........... 019E4000   Starting Address........... 00E98000
ECSA to ESQA (Kbytes)...... 4,120      CSA to SQA (Kbytes)........ 764

     AQATINDX  +---------- DFE Queue Origins -----------+
Sp   Address   Addr <16M  Addr >16M  Size <16M  Size >16M
***  ********  ****************************************
226  021E73B0  021EAF44   --------   021EAF44   --------
239  021E6FB0  021EAA94   021EACEC   021EAA94   021EACEC
245  021E6BB0  021EA5E4   021EA83C   021EA5E4   021EA83C
247  021E77B0  --------   021EB19C   --------   021EB19C
248  021E7BB0  --------   021EB3F4   --------   021EB3F4
***************************** BOTTOM OF DATA *********************************
```

The DFE Queue Origins for SQA subpools are available. DFEs represent available storage (free) in a 64K block of storage represented by an address queue anchor table (AQAT) address. Each AQAT contains 128 entries that consist of an array of queue headers into L/SQA DFE (by address) queues and 16 allocation bits that represent storage allocated in an L/SQA subpool. Each AQAT entry is 6 bytes long and describes 64K of storage.

The address of the AQAT is found from an entry in an AQATINDX table. Each L/SQA subpool has its own AQATINDX, addressed from either the GDA (SQA) or LDA (LSQA). Each AQATINDX has 256 entries, each representing 8M of storage.

Tab selecting the addresses of the DFE queue origins displays the list of DFEs as described in the column heading:

- Sorted by address below 16Mb boundary
- Sorted by address above 16Mb boundary
- Sorted by size below 16Mb boundary
- Sorted by size above 16Mb boundary.

Because DFEs are on 8-byte boundaries, VSM places dummy DFEs at each boundary denoted by an area (address) and size equal to zeroes. Use the cursor point-and-shoot feature and press Enter at 021EAA94 under the Size < 16M column for subpool 239 to display the DFEs in Size Queue Order screen, as shown in Figure 16-56.

Figure 16-56. DFEs in Size Queue Order Screen

```
 Abend-AID for CICS ----- DFEs in Size Queue Order ------ Row 000001 of 000045
COMMAND ===>                                                SCROLL ===> DATA

Subpool................. 239         Total Free................. 17,936
Subpool Location........ SQA <16M

DFE                 Size of
Address   DFE Area  Area       Error
********  ********  *********  *****  ********************************
021EAA94  00000000          0         This is a Dummy DFE
021EB9AC  00FA5000          8
028DE5F8  00FAC000          8
028DE430  00FB3000          8
028DE358  00F95000          8
028DE280  00FA2000          8
021EAAAC  00000000          0         This is a Dummy DFE
07D22B08  00F8ED90         16
0789C6A0  00F89D00         16
028DE568  00F7EFA0         16
021EAAC4  00000000          0         This is a Dummy DFE
01B7ECB8  00F7E000         24
021EAADC  00000000          0         This is a Dummy DFE
021EAAF4  00000000          0         This is a Dummy DFE
021EAB0C  00000000          0         This is a Dummy DFE
```

CSA Analysis

After selecting a region dump, enter the **CSASUM** fast-path command on any command line or select the CSASUM option (9) on the MVS Storage Analysis menu to display the Common Service Area Summary screen, as shown Figure 16-57.

Figure 16-57. Common Service Area Summary Screen

```
 Abend-AID for CICS ---- Common Service Area Summary -------------------------
COMMAND ===>

GDA Address................ 021E41A0
SPT Address................ 028D09F8
CSA Tracking Status........ Active
To view a summary of CSA subpools select Summarize

Extended Common Service Area           Common Service Area
Maximum Address............ 0B7FFFFF   Maximum Address............ 00C53FFF
Maximum Size (Kbytes)...... 100,772    Maximum Size (Kbytes)...... 4,432
Starting Address........... 05597000   Starting Address........... 00800000
ECSA to ESQA (Kbytes)...... 4,120      CSA to SQA (Kbytes)........ 764
Free Blocks Available...... Yes        Free Blocks Available...... No
```

The global data area (GDA) address is contained in the header. This address is the VSM anchor block that contains information on system-related virtual storage; in particular, the CSA and SQA subpools. The CSA tracking status is listed as either Active or Inactive at the time the SVC dump was taken. If Active, a list of address spaces that had allocated CSA is available. For more information about the Common Storage Users screen, refer to "Common Storage Users" on page 16-27.

Also in the header is the address of the subpool table (SPT), which contains the DQE chains for the CSA subpools. As on the SQA Summary screen, the amounts of ECSA converted to ESQA and CSA converted to SQA are listed. These may or may not equal the difference between the allocated amounts and sizes of the SQA areas. The amount of extended CSA converted to extended SQA is 4,120K, and the amount of CSA converted to SQA is 764K. Adding 4,120K to the 79,584K allocated to extended CSA gives 83,704K. Dividing that by the size of the extended CSA at 100,772K reveals the extended CSA is 83.063 percent allocated. Adding 764K to the 3,668K allocated to CSA gives 4,432K or 100 percent of the defined size of the CSA.

An important indicator is whether there are free blocks of storage available in the extended CSA or the CSA. If there are, use the cursor point-and-shoot feature and press Enter at Yes to display the FBQEs with the address and size of each free block. If there are no free blocks available, No is displayed, which is not selectable. As expected, there are no free blocks available because the CSA was 100 percent allocated. The extended CSA does have free blocks, so press Enter at Yes to display the CSA Free Block Queue Elements screen, as shown in Figure 16-58 on page 16-37.

Figure 16-58. CSA Free Block Queue Elements Screen

```
 Abend-AID for CICS --- CSA Free Block Queue Elements --- Row 000001 of 000109
COMMAND ===>                                                SCROLL ===> DATA

Total free storage (Kbytes)...... 17,068

FBQE      Start of  End of    Size of
Address   Area      Area      Area
********  ********  ********  **********
02285F28  05597000  06519FFF     15,884K
01D47F58  065D0000  065D0FFF          4K
01AB5E08  065D7000  065DBFFF         20K
024A8520  065DE000  065E2FFF         20K
07499388  065E4000  065E8FFF         20K
02786610  065EA000  065EAFFF          4K
06A83E98  065EC000  065ECFFF          4K
02786D90  065F4000  065F8FFF         20K
088D9FD0  06604000  06604FFF          4K
02784B80  06606000  0660AFFF         20K
06AA3730  0662B000  0662FFFF         20K
02786880  06632000  06632FFF          4K
0789CA60  0663E000  0663EFFF          4K
02788CA0  06642000  06646FFF         20K
08579298  06648000  0664CFFF         20K
06D718C8  06651000  06651FFF          4K
```

Press the END (PF3) key to return to the Common Service Area Summary screen. Use the cursor point-and-shoot feature and press Enter at the Summarize field to display the Summarized CSA Subpools screen, as shown in Figure 16-59.

Figure 16-59. Summarized CSA Subpools Screen

```
 Abend-AID for CICS ------ Summarized CSA Subpools ------ Row 000001 of 000004
COMMAND ===>                                                SCROLL ===> DATA
                                                                         ==>
CSA Size (Kbytes)........................... 4,432
Extended CSA Size (Kbytes)................... 100,772
Total CSA Allocated (Kbytes)................ 3,668
Total Extended CSA Allocated (Kbytes)....... 79,584

     Allocated   Percent of   Allocated   Percent of   Total       Percent of
Id   <16Mb       Total <16Mb  >16Mb       Total >16Mb  Allocated   <16M + >16M
***  **********  ***********  **********  ***********  **********  ***********
227         44K      1.200        2,404K      3.021        2,448K      2.940
228        324K      8.833        5,292K      6.650        5,616K      6.746
231        984K     26.827       32,956K     41.410       33,940K     40.768
241      2,316K     63.141       38,932K     48.919       41,248K     49.546
****************************** BOTTOM OF DATA ********************************
```

The Summarized CSA Subpools screen is very much like the Summarized Private Subpools screen with the addition of the DQE Errors and FQE Errors columns. These are indicators if there were any errors found processing CSA DQEs or FQEs. Unless QUIESCE=YES is specified on the SDUMP macro or set via the CHNGDUMP command, the CSA and SQA remain dynamic while they're being dumped. This situation likely causes DQE and/or FQE chaining errors. Refer to the CHNGDUMP command in the IBM OS/390 MVS system commands manual for information on precedence between the SDUMP macro and the CHNGDUMP command.

The total allocations calculated for a subpool may be inaccurate if there are DQE errors. Processing for a subpool/key stops for certain DQE errors. The Abend-AID for CICS Dump Analysis Message Log and viewing server FDBDLOG show messages indicating the nature of the error(s). The total allocated amounts in the header do not include the amounts (if any) converted to E/SQA. The percentages are calculated using the total allocated E/CSA amounts. Use the cursor point-and-shoot feature and press Enter at one of the subpool numbers under the Id column to display the CSA Subpool Allocations screen, as shown in Figure 16-60.

Figure 16-60. CSA Subpool Allocations Screen

```
 Abend-AID for CICS ------ CSA Subpool Allocations ------ Row 000001 of 000010
COMMAND ===>                                                SCROLL ===> DATA
                                                                         ==>
Subpool..................... 241
Allocated <16Mb (Kbytes).... 2,316    Free <16Mb (Kbytes)......... 195
Allocated >16Mb (Kbytes).... 38,932   Free >16Mb (Kbytes)......... 756
Total Allocated (Kbytes).... 41,248   Total Free (Kbytes)......... 951

     Allocated   Percent of   Allocated   Percent of   Total       Percent of
Key  <16Mb       Total <16Mb  >16Mb       Total >16Mb  Allocated   <16M + >16M
***  **********  ***********  **********  ***********  **********  ***********
  0      1,416K     61.140       14,072K     36.145       15,488K     37.548
  1         32K      1.382          672K      1.726          704K      1.707
  2         36K      1.554            0K      0.000           36K      0.087
  3         12K      0.518          304K      0.781          316K      0.766
  4         12K      0.518        3,152K      8.096        3,164K      7.671
  5         56K      2.418        1,880K      4.829        1,936K      4.694
  6         40K      1.727       14,680K     37.707       14,720K     35.687
  7        640K     27.634        3,560K      9.144        4,200K     10.182
  8         52K      2.245          216K      0.555          268K      0.650
 10         20K      0.864          396K      1.017          416K      1.009
****************************** BOTTOM OF DATA ********************************
```

This screen breaks down the CSA subpool allocations by key. The DQE and FQE error indicators apply to the subpool/key combination. If no errors were reported on the Summarized CSA Subpools screen, there should be none here. Use the cursor point-and-shoot feature and press Enter at one of the numbers under the Key column heading to display the CSA Subpool Detail screen, as shown in Figure 16-61.

Figure 16-61. CSA Subpool Detail Screen

```
 Abend-AID for CICS --------- CSA Subpool Detail ------------------ Row 000001
COMMAND ===>                                                SCROLL ===> DATA
                                                                         ==>
Subpool..................... 241      Allocated <16Mb (Kbytes).... 1,416
Key......................... 0        Allocated >16Mb (Kbytes).... 14,072
SPT Entry Address........... 028D0E7C Total Allocated (Kbytes).... 15,488
                                      Free <16Mb.................. 55,032
                                      Free >16Mb.................. 441,376
                                      Total Free.................. 496,408

DQE       Backing   Area      Size of     FQE     FQE       Area      Size of
Address   Storage   Address   Area        Errors  Address   Address   Area
********  ********  ********  **********  ******  ********  ********  *********
024C8F88  BELOW     00802000         12K  No      01AB5190  00802000      1,488
0672EC10  BELOW     00805000          8K  No      082560D0  00805000      3,056
024F6868  BELOW     00807000          4K  No      09A45DC0  00807000         16
084290B8  BELOW     00823000         12K  No      02782130  00823000      1,624
024C8F28  BELOW     0082F000         12K  No      06DDB5E0  0082F000        888
027A92F8  BELOW     00873000         12K  No      0672E8B0  00873000      1,488
06D71958  BELOW     00886000         12K  No      01AB52E0  00886000      1,624
0672EB08  BELOW     0088E000         12K  No      027ABBF8  0088E000        888
06D1BFB8  BELOW     00896000          8K  No      06D1B118  00896000      2,984
0672ED48  BELOW     0089F000         16K  No      02788910  0089F000      3,064
0256CDD8  BELOW     008B5000         12K  No      06D71B98  008B5000      3,336
```

The address of the SPT for this subpool/key, which is composed of several DQE chains, is displayed in the header. The remainder of the screen is similar to the Private Subpool Detail screen with the addition of the FQE Errors column. This column indicates if there were any FQE errors detected for a particular DQE. If Yes, the Free amounts in the header may be inaccurate. It takes longer to display the CSA Subpool Detail screen for a subpool/key with a large amount of storage allocated because the first 32 bytes of data need to be retrieved.

Press the RIGHT (PF11) key to display the right-most portion of the screen. In addition to looking at the first 32 bytes of data, watch for large (size) DQEs. From the First 32 Bytes of Data column, note that many modules are loaded into SP241 key 0 storage. Enter **DFS** in the mask line starting in the sixth position under the First 32 Bytes of Data column heading to display some of the IMS modules loaded into CSA storage, as shown in Figure 16-62.

Figure 16-62. CSA Subpool Detail Screen, Masked

```
 Abend-AID for CICS -------- CSA Subpool Detail --------- Row 000001 of 000325
COMMAND ===>                                                SCROLL ===> DATA
                                                                         <==
Subpool..................... 241      Allocated <16Mb (Kbytes).... 1,416
Key......................... 0        Allocated >16Mb (Kbytes).... 14,072
SPT Entry Address........... 028D0E7C Total Allocated (Kbytes).... 15,488
                                     Free <16Mb................... 55,032
                                     Free >16Mb................... 441,376
                                     Total Free................... 496,408

DQE       Backing   Area      Size   Data
Address   Storage   Address   Area   Address   First 32 Bytes of Data
********  ********  ********  *****  ********  *****DFS************************
024C8F88  BELOW     00802000  1,488  008025D0   00  DFSFXC10-410-06/27/95PN7215
0672EC10  BELOW     00805000  3,056  00805BF0   00  DFSLDTR0-410-04/10/93PTQ072
024F6868  BELOW     00807000     16  00807010   00  DFSDRCL0+S203+SP42+410+11/0
027A92F8  BELOW     00873000  1,488  008735D0   00  DFSFXC10-410-06/27/95PN7215
08AC1070  BELOW     0095A000  1,488  0095A5D0   00  DFSFXC10-410-06/27/95PN7215
08AC1088  BELOW     0095D000  3,056  0095DBF0   00  DFSLDTR0-410-04/10/93PTQ072
08CB06D0  BELOW     0095F000     16  0095F010   00  DFSDRCL0+S203+SP42+410+10/3
08BEF178  BELOW     00990000    352  00990160   00  DFSSBT10+410+04/10/93+04.55
                                 88  009BD148   00  DFSFDLF0-410-10/30/96-08.41
0250CDF0  BELOW     009BF000      8  009BF008   00  DFSDRCL0+S203+SP53+510+05/1
                               2,424  009F1FC8   00  DFSIAFP0-S203-SP31-510-08/0
```

These modules may be loaded here because of specification in the IEAFIXxx or IEALPAxx members in SYS1.PARMLIB ; that is, the FLPA or MLPA. You can verify this from the Link Pack Areas Map.

Link Pack Areas

After you've selected the dump, enter the **LPAMAP** fast-path command on any command line or select the LPAMAP option (11) from the MVS Storage Analysis menu to display the Link Pack Areas Map screen, as shown in Figure 16-63.

Figure 16-63. Link Pack Areas Map Screen

```
 Abend-AID for CICS -------- Link Pack Areas Map ------------------ Row 000001
COMMAND ===>                                                 SCROLL ===> DATA
                                                                        ==>
 PLPA Directory Address...... 00CA0000
 F/MLPA Queue Address........ 00FD37C8
 Dynamic LPA Queue Address... 00F0F400

Entry                 Extent    Extent    Load                CDE/LPDE
Point     Name        Address   Length    Module    Amode     Address   LPA Queue
********  ********    ********  ********  ********  *******   ********  *********
00BC8000  CTSPM       00BC8000  00002C00            AMODE31   00F1B010  F/MLPA
00BC8000  TMSPM                           CTSPM     AMODE31   00F15B00  F/MLPA
00BCB478  TMSSECUR    00BCB478  00002B88            AMODE24   00F0A550  F/MLPA
00BCE758  TMSLABEL    00BCE758  000028A8            AMODE31   00F8D150  F/MLPA
00BD1148  CTSDATE     00BD1148  00003EB8            AMODE31   00F93040  F/MLPA
00BD1148  TMSDATE                         CTSDATE   AMODE31   00F12200  F/MLPA
00BD51E0  TMSOSI26    00BD51E0  00002E20            AMODE31   00F920D0  F/MLPA
00BDE350  TMSOCE43    00BDE350  00004CB0            AMODE24   00F92150  F/MLPA
00BEC210  TMSTMVT     00BEC210  00001DF0            AMODE24   00F1B070  F/MLPA
00BEE010  CASMINIT    00BEE010  00000730            AMODE31   00F0DC40  F/MLPA
00BEFD88  CAS9SAFC    00BEFD88  00002278            AMODE31   00F12008  F/MLPA
00BF2088  TMSUX2S     00BF2088  000003C8            AMODE24   00F0DC70  F/MLPA
00BF2450  TMSQSTS     00BF2450  00000B10            AMODE24   00F15B50  F/MLPA
00BF91A0  TMSUX2E     00BF91A0  000003A8            AMODE31   00F0DCA0  F/MLPA
```

The addresses of the LPA directories or queues of the modules are displayed in the header. Depending on the version of OS/390, there is a dynamic LPA queue address. This address is a pointer to a chain of CDEs representing modules defined on LPA statements coded in PROGxx members of SYS1.PARMLIB.

This screen is sorted by entry point address. The entry point may be highlighted if it lies outside the boundaries of the the extent (XTLMSBAD+XTLMSBLN for CDEs or LPDEXTAD+LPDEXTLN for LPDEs). This situation usually indicates an OEM vendor replacement or "hook" module for an operating system function. The LPA queue identifies from which directory or queue the named module was located. The storage area identifies in which virtual storage area the entry point lies. LPA modules residing in the E/CSA or E/SQA are not identified on the Memory Display because the underlying E/CSA or E/SQA subpool is identified.

Press the RIGHT (PF11) key to display the right-most portion of the Link Park Areas Map screen. Enter **PLPA** in the first four positions of the mask line under the Storage Area column heading to display only modules located in the PLPA, as shown in Figure 16-64 on page 16-41.

Figure 16-64. Link Pack Areas Map Screen, Masked

```
 Abend-AID for CICS -------- Link Pack Areas Map -------- Row 000001 of 000685
COMMAND ===>                                                SCROLL ===> DATA
                                                                    <==
 PLPA Directory Address...... 00CA0000
 F/MLPA Queue Address........ 00FD37C8
 Dynamic LPA Queue Address... 00F0F400

Entry     E  Extent    Load                CDE/LPDE
Point     A  Length    Module    Amode     Address   LPA Queue  Storage Area
********  *  ********  ********  *******   ********  *********  PLPA************
00CB5428  8  000000C0            AMODE24   00CA1568  PLPA       PLPA
00CB54E8  8  000000B8            AMODE24   00CA1838  PLPA       PLPA
00CB55A0  0  000000E0            AMODE24   00CAF988  PLPA       PLPA
00CB5680  0  000000E0            AMODE24   00CA2300  PLPA       PLPA
00CB5760  0  000000B8            AMODE24   00CA4F10  PLPA       PLPA
00CB5818  8  000001E8            AMODE24   00CA34A8  PLPA       PLPA
00CB5A00  0  00000190            AMODE24   00CA7850  PLPA       PLPA
00CB5B90  0  00000158            AMODE24   00CA13B0  PLPA       PLPA
00CB5CE8  8  00000180            AMODE24   00CA1388  PLPA       PLPA
00CB5E68  8  00000198            AMODE24   00CA15B8  PLPA       PLPA
00CB6000  0  00000008            AMODE24   00CA9538  PLPA       PLPA
00CB6000               IEFRSTRT  AMODE24   00CA93D0  PLPA       PLPA
00CB6008  8  000001E8            AMODE24   00CA18D8  PLPA       PLPA
00CB61F0  0  00000158            AMODE24   00CA6EA0  PLPA       PLPA
```

Another way to list only modules in the PLPA is to use the cursor point-and-shoot feauture and press enter at the Starting Address of PLPA on the Virtual Storage Map screen. However, doing so doesn't display the same number of entries on the Link Pack Areas Map because the Allocated Storage Map includes only complete extents (load modules) from the PLPA. Enter the **RESET** primary command on the command line to reset the display. Enter **F/MLPA** in the first six positions of the mask line under the LPA Queue column heading to display only modules located in the FLPA/MLPA queue, as shown in Figure 16-65.

Figure 16-65. Link Pack Areas Map Screen, Masked

```
 Abend-AID for CICS -------- Link Pack Areas Map -------- Row 000001 of 000090
COMMAND ===>                                                SCROLL ===> DATA
                                                                    <==
 PLPA Directory Address...... 00CA0000
 F/MLPA Queue Address........ 00FD37C8
 Dynamic LPA Queue Address... 00F0F400

Entry     E  Extent    Load                CDE/LPDE
Point     A  Length    Module    Amode     Address   LPA Queue  Storage Area
********  *  ********  ********  *******   ********  F/MLPA***  ***************
00BC8000  0  00002C00            AMODE31   00F1B010  F/MLPA     CSA
00BC8000               CTSPM     AMODE31   00F15B00  F/MLPA     CSA
00BCB478  8  00002B88            AMODE24   00F0A550  F/MLPA     CSA
00BCE758  8  000028A8            AMODE31   00F8D150  F/MLPA     CSA
00BD1148  8  00003EB8            AMODE31   00F93040  F/MLPA     CSA
00BD1148               CTSDATE   AMODE31   00F12200  F/MLPA     CSA
00BD51E0  0  00002E20            AMODE31   00F920D0  F/MLPA     CSA
00BDE350  0  00004CB0            AMODE24   00F92150  F/MLPA     CSA
00BEC210  0  00001DF0            AMODE24   00F1B070  F/MLPA     CSA
00BEE010  0  00000730            AMODE31   00F0DC40  F/MLPA     CSA
00BEFD88  8  00002278            AMODE31   00F12008  F/MLPA     CSA
00BF2088  8  000003C8            AMODE24   00F0DC70  F/MLPA     CSA
00BF2450  0  00000B10            AMODE24   00F15B50  F/MLPA     CSA
00BF91A0  0  000003A8            AMODE31   00F0DCA0  F/MLPA     CSA
```

Nucleus Areas

After you select the dump, enter the **NUCMAP** fast-path command from any command line or select the NUCMAP option (12) from the MVS Storage Analysis menu to display the Nucleus Map screen, as shown in Figure 16-66.

Figure 16-66. Nucleus Map Screen

```
 Abend-AID for CICS ------------ Nucleus Map ---------------------- Row 000001
COMMAND ===>                                                  SCROLL ===> DATA

 NUCMAP Address........................ 016487B0
 Nucleus suffix (IEANUC0x)............ 1
 Number of Read/Write CSECTs........... 75
 Number of Read Only CSECTs............ 87
 Number of Ext Read Only CSECTs........ 1,613
 Number of Ext Read/Write CSECTs....... 121

Entry     CSECT     CSECT
Point     Name      Length    Amode  Storage Area
********  ********  ********  *****  ****************
00FC3000  IECVPRNT  000004F8  31     Nucleus (R/W)
00FC34F8  IECVAFP1  00000780  31     Nucleus (R/W)
00FC3C78  CBROPDDT  0000004C  24     Nucleus (R/W)
00FC3CC8  IECVDDTR  0000021C  24     Nucleus (R/W)
00FC3EE8  IECVDDT5  0000004C  24     Nucleus (R/W)
00FC3F38  IOSVDDTD  0000004C  24     Nucleus (R/W)
00FC3F88  IOSVDDTE  0000004C  24     Nucleus (R/W)
00FC3FD8  IOSVDDTS  0000004C  24     Nucleus (R/W)
00FC4028  IGGDDT01  00000282  24     Nucleus (R/W)
00FC42B0  IECDPERF  0000014C  24     Nucleus (R/W)
00FC4400  IRDVDDT   00000048  24     Nucleus (R/W)
```

The suffix of the IEANUC0x module used to IPL the system, the address of the NUCMAP, and total CSECTs found in the four nucleus areas are displayed in the header. This screen is sorted by Entry Point address. If you know the name of a nucleus CSECT, but don't know where it's located, you can enter the name in the mask line under the CSECT Name column heading to find it. For example, if you want to locate all IGC CSECTs, enter **IGC** in the first three positions of the mask line, as shown in Figure 16-67.

Figure 16-67. Nucleus Map Screen, Masked

```
 Abend-AID for CICS ------------ Nucleus Map ------------ Row 000001 of 000022
COMMAND ===>                                                  SCROLL ===> DATA

 NUCMAP Address........................ 016487B0
 Nucleus suffix (IEANUC0x)............ 1
 Number of Read/Write CSECTs........... 75
 Number of Read Only CSECTs............ 87
 Number of Ext Read Only CSECTs........ 1,613
 Number of Ext Read/Write CSECTs....... 121

Entry     CSECT     CSECT
Point     Name      Length    Amode  Storage Area
********  IGC*****  ********  *****  ****************
00FC4740  IGC247    00001A30  ANY    Nucleus (R/W)
00FC6170  IGC246    00000048  ANY    Nucleus (R/W)
00FC98A8  IGC234    00000B51  24     Nucleus (R/W)
00FCA400  IGC231    00000B59  24     Nucleus (R/W)
00FCAF60  IGC214    00000A80  24     Nucleus (R/W)
00FCB9E0  IGC203    00000A98  24     Nucleus (R/W)
00FD3A38  IGC037    000000DC  24     Nucleus (R/W)
00FD3B18  IGC117    000005A8  24     Nucleus (R/W)
00FEE718  IGC123    00000E70  31     Nucleus (R/O)
00FF6578  IGC043    00000190  ANY    Nucleus (R/O)
00FFB7F0  IGC111    000000DD  24     Nucleus (R/O)
```

Enter the **RESET** primary command on the command line to reset the display. Enter **Ext Nuc (R/O)** in the mask line under the Storage Area column heading to display only modules located in the extended read-only nucleus, as shown in Figure 16-68.

Figure 16-68. Nucleus Map Screen, Masked

```
 Abend-AID for CICS ------------ Nucleus Map ------------ Row 000001 of 001613
COMMAND ===>                                                SCROLL ===> DATA

 NUCMAP Address........................ 016487B0
 Nucleus suffix (IEANUC0x)............ 1
 Number of Read/Write CSECTs........... 75
 Number of Read Only CSECTs............ 87
 Number of Ext Read Only CSECTs........ 1,613
 Number of Ext Read/Write CSECTs....... 121

Entry     CSECT     CSECT
Point     Name      Length    Amode  Storage Area
********  ********  ********  *****  EXT*NUC*(R/O)***
01000000  IECVXURS  000000F0  31     Ext Nuc (R/O)
010000F0  IECVXURT  00000028  31     Ext Nuc (R/O)
01000118  IOSVE0SC  00000510  31     Ext Nuc (R/O)
01000628  CBROPDSE  000001D8  31     Ext Nuc (R/O)
01000800  IECTTRAP  000006D8  31     Ext Nuc (R/O)
01000ED8  IECVXT6S  00000450  31     Ext Nuc (R/O)
01001328  IECVXT6U  00000228  31     Ext Nuc (R/O)
01001550  IGGSNS02  00000EF0  31     Ext Nuc (R/O)
01002440  IECTDSRV  00001EB8  31     Ext Nuc (R/O)
010042F8  IECTDSR2  00002450  31     Ext Nuc (R/O)
01006748  IECVTMIH  000003E0  31     Ext Nuc (R/O)
```

Another way to list only modules in the extended read-only nucleus is to use the cursor point-and-shoot feature and press Enter at the Starting Address field for the extended nucleus (R/O) on the Virtual Storage Map screen. However, doing so doesn't display the amode information on the Nucleus Map because the Allocated Storage Map with modules from the extended read-only nucleus is displayed, as shown in Figure 16-69.

Figure 16-69. Allocated Storage Map Screen

```
 Abend-AID for CICS ------- Allocated Storage Map ---------------- Row 000001
COMMAND ===>                                                SCROLL ===> DATA
                                                                       ==>
Starting  Ending    Number                  E/PVT  Sp                  TCB
Address   Address   of Pages   Area         Area   Id   Key  Ownership  Address
********  ********  ********   ***********  *****  ***  ***  *********  *******
01000000  010000EF             Ext Nuc-R/O
010000F0  01000117             Ext Nuc-R/O
01000118  01000627             Ext Nuc-R/O
01000628  010007FF             Ext Nuc-R/O
01000800  01000ED7             Ext Nuc-R/O
01000ED8  01001327             Ext Nuc-R/O
01001328  0100154F             Ext Nuc-R/O
01001550  0100243F             Ext Nuc-R/O
01002440  010042F7             Ext Nuc-R/O
010042F8  01006747             Ext Nuc-R/O
01006748  01006B27             Ext Nuc-R/O
01006B28  010079B7             Ext Nuc-R/O
010079B8  01007BBF             Ext Nuc-R/O
01007BC0  01007C67             Ext Nuc-R/O
01007C68  01007CBF             Ext Nuc-R/O
01007CC0  01008AD7             Ext Nuc-R/O
01008AD8  01008ED7             Ext Nuc-R/O
01008ED8  01009077             Ext Nuc-R/O
```

Allocated Storage Map

The Allocated Storage Map displays all allocated storage through x'7FFFFFFF', including the nucleus and link pack areas providing the nucleus map and/or LPA queues are included in the SVC dump dataset. After you select the dump, enter the **ASMAP** fast-path command on any command line or select the ASMAP option (6) from the MVS Storage Analysis menu to display all allocated storage, as shown in Figure 16-70. All virtual storage areas are included.

Figure 16-70. Allocated Storage Map Screen

```
 Abend-AID for CICS ------- Allocated Storage Map ------- Row 000001 of 009109
COMMAND ===>                                                SCROLL ===> DATA
                                                                         ==>
Starting  Ending    Number                  E/PVT  Sp                   TCB
Address   Address   of Pages   Area         Area   Id   Key  Ownership  Address
********  ********  ********   ***********  *****  ***  ***  *********  *******
00005000  00005FFF         1   Private      USER     0    7  OWN,SHR    007FDE8
00006000  00007FFF         2   Private      USER   251    7  OWN        007E2D9
00008000  00008FFF         1   Private      USER   252    0  OWN        007E2D9
00009000  00009FFF         1   Private      USER   251    7  OWN        007E2D9
0000A000  0000AFFF         1   Private      USER     0    7  OWN,SHR    007FDE8
0000B000  0000CFFF         2   Private      USER   251    7  OWN        007E2D9
0000D000  00011FFF         5   Private      USER     0    7  OWN,SHR    007FDE8
00012000  0001FFFF        14   Private      USER   251    7  OWN        007E2D9
00020000  0005AFFF        59   Private      USER     0    7  OWN,SHR    007FDE8
0005B000  0005FFFF         5   Private      USER   251    7  OWN        007E2D9
00060000  00060FFF         1   Private      USER   127    7  OWN        007E2D9
007C0000  007C1FFF         2   Private      SWA    236    1  OWN,SHR    007FDE8
007C4000  007CCFFF         9   Private      SWA    236    1  OWN,SHR    007FDE8
007CD000  007CDFFF         1   Private      AUTH   230    7  OWN        007E2D9
007CE000  007CEFFF         1   Private      LSQA   255
007CF000  007CFFFF         1   Private      AUTH   230    0  OWN        007E2D9
007D0000  007D0FFF         1   Private      LSQA   255
```

Alternatively, selecting a virtual storage area's starting address on the Virtual Storage Map displays only that area's entries from the map. For example, use the cursor point-and-shoot feature and press Enter at the Starting Address field for extended SQA to display a subset of the Allocated Storage Map including only allocated storage for extended SQA, as shown in Figure 16-71.

Figure 16-71. Allocated Storage Map Screen for Extended SQA

```
 Abend-AID for CICS ------- Allocated Storage Map ------- Row 000001 of 000794
COMMAND ===>                                                SCROLL ===> DATA
                                                                         ==>
 Number of ESQA entries...... 794        Number of ESQA pages.... 4,848

Starting  Ending    Number                  E/PVT  Sp                   TCB
Address   Address   of Pages   Area         Area   Id   Key  Ownership  Address
********  ********  ********   ***********  *****  ***  ***  *********  *******
019E4000  019EBFFF         8   Ext SQA             245
01A9C000  01AC1FFF        38   Ext SQA             245
01AC2000  01AC2FFF         1   Ext SQA             248
01AC3000  01B30FFF       110   Ext SQA             245
01B31000  01B34FFF         4   Ext SQA             247
01B35000  01B35FFF         1   Ext SQA             239
01B36000  01B36FFF         1   Ext SQA             245
01B37000  01B37FFF         1   Ext SQA             239
01B38000  01B39FFF         2   Ext SQA             245
01B3A000  01B3CFFF         3   Ext SQA             248
01B3D000  01B3EFFF         2   Ext SQA             245
01B3F000  01B7DFFF        63   Ext SQA             248
01B7E000  01B7FFFF         2   Ext SQA             245
01B80000  01B89FFF        10   Ext SQA             247
01B8A000  01B8BFFF         2   Ext SQA             248
```

The number of pages found allocated in the Extended SQA is displayed in the header. Multiplying these by 4096 and then dividing by 1024 equals the amount listed under the column for extended SQA on the Virtual Storage Map. Because the Allocated Storage Map is sorted by starting address, enter the BOTTOM primary command, or type MAX on the command line and then press the DOWN (PF8) key to display the highest addresses allocated to the extended SQA. Because the defined extended CSA starting address is after the ending address of the extended SQA, all of the converted extended CSA pages are at the end of the extended SQA, as shown in Figure 16-72.

Figure 16-72. Allocated Storage Map Screen for Extended SQA

```
 Abend-AID for CICS ------- Allocated Storage Map ------- Row 000780 of 000794
COMMAND ===>                                                SCROLL ===> DATA
                                                                         ==>
 Number of ESQA entries...... 794        Number of ESQA pages.... 4,848

Starting  Ending    Number                  E/PVT  Sp                    TCB
Address   Address   of Pages   Area         Area   Id   Key  Ownership  Address
********  ********  ********   ***********  *****  ***  ***  *********  *******
09BE4000  09BE9FFF         6   Ext SQA <           245
09BF4000  09BF4FFF         1   Ext SQA <           245
09BF8000  09BF8FFF         1   Ext SQA <           239
09D1A000  09D1AFFF         1   Ext SQA <           245
09E1E000  09E1EFFF         1   Ext SQA <           239
0A085000  0A085FFF         1   Ext SQA <           245
0A358000  0A358FFF         1   Ext SQA <           245
0A37B000  0A37BFFF         1   Ext SQA <           245
0A5E3000  0A5E3FFF         1   Ext SQA <           245
0A5E9000  0A5E9FFF         1   Ext SQA <           245
0A661000  0A66EFFF        14   Ext SQA <           245
0B1C4000  0B1C4FFF         1   Ext SQA <           245
0B1D3000  0B1D3FFF         1   Ext SQA <           245
0B1F8000  0B1F8FFF         1   Ext SQA <           245
0B228000  0B22BFFF         4   Ext SQA <           245
****************************** BOTTOM OF DATA ********************************
```

You can use masking and sorting on the Allocated Storage Map screen. Enter Ext SQA < in the mask line under the Area column heading to display only converted CSA pages in the extended SQA, as shown in Figure 16-73 on page 16-46. Now that only converted extended SQA pages are listed, enter the SORT primary command, or type SORT on the command line and press Enter at the Number of Pages column heading. Total the number of pages and multiply by 4096. Next, divide by 1024 for the amount of extended CSA converted in kilobytes. This amount should equal the amount displayed on the Common Service Area Summary screen or the SQA Summary screen.

Figure 16-73. Allocated Storage Map Screen, Masked

```
 Abend-AID for CICS ------- Allocated Storage Map ------- Row 000573 of 000587
COMMAND ===>                                                SCROLL ===> DATA
                                                                         ==>
 Number of ESQA entries...... 794        Number of ESQA pages.... 4,848

Starting  Ending    Number                  E/PVT  Sp                   TCB
Address   Address   of Pages   Area         Area   Id   Key  Ownership  Address
********  ********  ********   EXT*SQA*<**  *****  ***  ***  *********  *******
09BE4000  09BE9FFF         6   Ext SQA <           245
09BF4000  09BF4FFF         1   Ext SQA <           245
09BF8000  09BF8FFF         1   Ext SQA <           239
09D1A000  09D1AFFF         1   Ext SQA <           245
09E1E000  09E1EFFF         1   Ext SQA <           239
0A085000  0A085FFF         1   Ext SQA <           245
0A358000  0A358FFF         1   Ext SQA <           245
0A37B000  0A37BFFF         1   Ext SQA <           245
0A5E3000  0A5E3FFF         1   Ext SQA <           245
0A5E9000  0A5E9FFF         1   Ext SQA <           245
0A661000  0A66EFFF        14   Ext SQA <           245
0B1C4000  0B1C4FFF         1   Ext SQA <           245
0B1D3000  0B1D3FFF         1   Ext SQA <           245
0B1F8000  0B1F8FFF         1   Ext SQA <           245
0B228000  0B22BFFF         4   Ext SQA <           245
****************************** BOTTOM OF DATA ********************************
```

Part 4.
Setting User Controls

Part 4 describes the steps for changing the user interface defaults that are initially set during installation.

Part 4 consists of one chapter:

Chapter 17, "Setting User Controls"

Chapter 17 describes the steps for setting the following:

- User profiles
- Print options
- Screen attributes
- PF key settings.

Chapter 17.
Setting User Controls

This chapter describes the User Controls menu, which lists the input screens that enable you to change the defaults for the following facilities:

- User profiles
- Print options
- Screen attributes
- PF key settings.

To display the User Controls menu from any Abend-AID for CICS screen, enter **USER** as a fast-path command. The User Controls menu is also available as a selection on the Primary Options menu.

Figure 17-1. User Controls Menu

```
 Abend-AID for CICS ------------ User Controls ------------------------------
OPTION  ===>

                   1  PROF     User Profile

                   2  LIST     Print Output Options

                   3  ATTRBUTE Screen Attributes

                   4  KEYS     PF Key Customization

                   5  *CUSTOM  Site Customization Options
```

Note: The Custom mnemonic identifier may be preceded by an asterisk (*) and displayed in a different color than the other options on the User Controls menu. This option is not available to you unless you have the appropriate access authority for the Abend-AID for CICS customization screens. These screens are documented in the *Abend-AID for CICS Installation and Customization Guide*.

User Profile Screen

The User Profile screen allows you to modify site-defined defaults for a variety of user profile options. Modifying these options enables you to personalize how Abend-AID for CICS formats and displays data and help text. Options modified on the User Profile screen apply to the current Abend-AID for CICS session and all subsequent sessions.

Note: If you use multiple Abend-AID for CICS viewing servers, you must modify your user profile on each viewing server.

To modify a user profile, complete the following procedure:

1. Display the User Profile screen, shown in Figure 17-2, using one of the following methods:
   - Tab to the PROFILE option on the User Controls menu, and press Enter.
   - Enter **PROF** as a fast-path command.
   - Enter **=U.1** as a jump command.

Figure 17-2. User Profile Screen

```
 Abend-AID for CICS ------------- User Profile ------------------------------
COMMAND ===>

Enter profile options below.  Type END (PF3) to save your changes, DEFAULTS
to reset the values, or CANCEL to exit without saving.

Prompt for confirmation when exiting Abend-AID for CICS............ N
Display instructional text on screens............................. Y
Display line commands on screens.................................. Y
Display screen borders............................................ Y
Automatically reselect last dump viewed........................... N
Confirm AA for CICS Directory delete requests..................... Y
Default SDUMP dataset disposition for delete requests............. K
Default region dump Diagnostic Summary format..................... F
Use source for transaction dump viewing........................... Y
Enable Source Support Instructional Window........................ Y
Print dataset prefix for VTAM and CICS access...................... ________
Automatically restore AA/CICS Directory sort and mask parameters... N
Automatically restore Source Program Directory sort and mask parms. N
Default FIND command line limit................................... 2500
Default national language......................................... ENG
Default region dump MATCH command length (1-26 bytes)............. 4
Default storage navigation mode (31 or 64 bit)..................... 31
```

   The User Profile screen displays a default user profile containing values supplied at installation. These values control how Abend-AID for CICS displays certain screen elements, formats data, and navigates when you enter and exit the product. If the defaults are acceptable to you, do nothing, and Abend-AID for CICS will use this profile. To customize the profile to your individual preferences, proceed to step 2.

2. Overtype the default value of the user profile option you want to modify with the new value. Press PF1 on any field for field help.
3. Do one of the following:
   - To save user profile options you modified, enter **END** (PF3) as a primary command.
   - To discard any modifications you made and return to the previous Abend-AID for CICS screen, enter **CANCEL** as a primary command.
   - To restore the user profile options to their defaults, enter **DEFAULTS** as a primary command.

Notes:

1. If, while viewing an abend, you change the value for using source for transaction abends, you must reselect the current screen in order to see the change.
2. You can modify certain user profile options temporarily using the following primary commands:
   - INSTRUCT modifies the instructional text option
   - LINECMDS modifies the line command descriptions option
   - BORDERS modifies the borders option
   - MODE modifies the storage navigation mode.

User profile options modified in this manner revert to their User Profile screen values at the beginning of the next session. Refer to Chapter 18, “Primary Commands” for additional information about these four commands.

Print Options

The Print Options and Initiation screen, shown in Figure 17-3, allows you to modify site-defined defaults for print options and to submit print jobs. Options modified on this screen apply to the current Abend-AID for CICS session and all subsequent sessions.

Refer to “Print Options and Initiation Screen” on page 7-1 for more information about using this screen.

Figure 17-3. Print Options and Initiation

```
 Abend-AID for CICS ----- Print Options and Initiation ---------------------
COMMAND ===>

Specify print information below, then type GO to submit the print job, or
SAVE to save your changes without printing, or CANCEL to cancel your changes.

Print option........ KN     PD - Print dataset and delete
                             D - Delete dataset without printing
                            KN - Keep dataset and continue with new dataset

Print Output Options:
SYSOUT Class............... A            Page Width (Characters)... 132
Destination................ LOCAL        Page Length (Lines)....... 60
Print Uppercase Only...... N

Jobcard Information:
1... //JOBNAME JOB ('ACCOUNTING.INFO'),'PROGRAMMER.NAME',
2... //            CLASS=A,MSGCLASS=A
3... //*
4... //*
5... //*
6... //*
```

Screen Attributes

The Screen Attributes screen allows you to modify site-defined defaults for the color, intensity, and highlighting of various screen elements. Modifying these options enables you to personalize how Abend-AID for CICS screen attributes are displayed on your monitor. Options modified on the Screen Attributes screen apply to the current Abend-AID for CICS session and all subsequent sessions.

Notes:

1. If you use multiple Abend-AID for CICS viewing servers, you must modify your screen attributes profile on each viewing server.
2. If you changed your default ISPF colors, these specifications override the specifications you make here when Abend-AID for CICS is accessed from ISPF.

To modify screen attributes, complete the following procedure:

1. Display the Screen Attributes screen, shown in Figure 17-4 on page 17-4, using one of the following methods:
   - Tab to the ATTRBUTE option on the User Controls menu, and press Enter.
   - Enter **ATTRBUTE** as a fast-path command.
   - Enter **=U.3** as a jump command.

Figure 17-4. Screen Attributes Screen

```
 Abend-AID for CICS ---------- Screen Attributes ----------------------------
COMMAND ===>

Enter color code for each screen area, intensity and extended highlighting,
then END (PF3) to save, DEFAULTS to reset the values, or CANCEL to cancel.
After saving, enter TESTSCR to see the effect of the changes.

W - White    T - Turquoise    R - Red    G - Green    Y - Yellow    B - Blue

Screen Area                                Color   Intensity   Highlighting
Borders                                    T       N           R
Tab-selectable Data                        G       N           N
Input Data                                 R       H           U
Available Fast-path Commands on Menus      G       N           R
Unavailable Fast-path Commands on Menus    T       N           R
Field Descriptions, Normal                 T       N           N
Field Descriptions, Emphasized             Y       H           N
Field Data, Normal                         W       H           N
Field Data, Emphasized                     Y       H           N
Field Data, Errors                         Y       H           N
Column Headings                            W       H           R
Group Headings, Normal                     W       H           R
Group Headings, Emphasized                 Y       H           N
```

The Screen Attributes screen displays default screen attribute values supplied at installation. These values control how Abend-AID for CICS should display certain screen attributes. If the defaults are acceptable to you, do nothing, and Abend-AID for CICS will use this profile. To customize the values to your individual preferences, proceed to step 2.

2. Overtype the default value of the screen attribute you want to modify with the new color, intensity, or highlighting value. Press PF1 on any field for field help.
3. Do one of the following:
   - To save screen attribute options you modified, enter **END** (PF3) as a primary command.
   - To discard any modifications you made and return to the previous Abend-AID for CICS screen, enter **CANCEL** as a primary command.
   - To restore the screen attribute options to their defaults, enter **DEFAULTS** as a primary command.
4. To view screen attribute options you modified and saved, enter **TESTSCR** as a primary command. The Attribute Test Screen, displaying screen attributes of the color, intensity, and highlighting you selected is displayed.

   Note: You must save changed screen attribute options by entering the END (PF3) primary command on the Screen Attributes screen in order to view the effects of those changes on the Attribute Test Screen.

Figure 17-5. Attribute Test Screen

```
 Abend-AID for CICS ------- Attribute Test Screen ------- Row 000001 of 000002
COMMAND ===>                                                SCROLL ===> PAGE



                            Normal Group Heading
 Field Description Normal....... NORMAL INPUT DATA
 Field Description Normal....... NORMAL SELECTABLE DATA
 Field Description Normal....... NORMAL DATA

                          Emphasized Group Heading
 Field Description Emphasized... EMPHASIZED INPUT DATA
 Field Description Emphasized... EMPHASIZED SELECTABLE DATA
 Field Description Emphasized... EMPHASIZED DATA

  1  DUMMYCMD Available Fast-Path Command

  2  DUMMYCMD Unavailable Fast-Path Command

 Column 1     Column 2
 Heading      Heading
 NORMAL DATA  080105F8
 NORMAL DATA  080105F8
 ***************************** BOTTOM OF DATA ******************************
```

Press PF1 on any field for field help. You can repeat this entire procedure until you are satisfied with the appearance of each screen attribute.

PF Keys

This section lists the initial PF key defaults that Abend-AID for CICS defines, and it details the steps for changing those defaults.

Note: If you use multiple Abend-AID for CICS viewing servers, you must modify your PF key defaults on each viewing server.

Default PF Key Definitions

Abend-AID for CICS maintains consistency with ISPF PF key definitions for keys PF1 through PF12 (commands such as UP, DOWN, END, and RETURN). In addition, PF13 through PF16 repeat the definitions assigned PF1 through PF4. The remaining keys, PF17 through PF24, are assigned specific Abend-AID for CICS functions.

Table 17-1 describes the defaults assigned to all 24 PF keys. For information on changing these defaults, refer to “Modifying PF Key Functions” on page 17-7.

Note: All references to PF keys in this manual assume the initial default values.

Table 17-1. Default PF Key Definitions

Key	Command	Description
PF1/PF13	HELP	Provides cursor-sensitive information. To display screen-level help, press the HELP PF key with the cursor positioned *off* any specific data field. To display field-level help, press the HELP PF key with the cursor located on the field. To display system message help, press the HELP PF key with the cursor located on the message.
PF2/PF14	SPLIT	Divides the display screen into two logical, functionally independent screens. Valid for ISPF access only.
PF3/PF15	END	Ends the current function and redisplays the previous level screen or menu.

Key	Command	Description
PF4/PF16	RETURN	Redisplays the Primary Options menu. Executing this command from the Primary Options menu exits the product.
PF5	RFIND	Repeats the last FIND command executed. For specifics about the FIND command, refer to "FIND" on page 18-12.
PF6	CCMENU	For transaction abends only. Displays the CICS Abend-AID transitional menu. This pop-up menu displays CICS Abend-AID commands and their equivalents in Abend-AID for CICS.
PF7	UP	Scrolls backward through a screen's scrollable area. To scroll a specific number of lines, type the UP command with a numeric value in the COMMAND field. For example, type **UP 12** and press Enter to scroll backward 12 lines.
PF8	DOWN	Scrolls forward through a screen's scrollable area. To scroll a specific number of lines, type the DOWN command with a numeric value in the COMMAND field. For example, type **DOWN 8** and press Enter to scroll forward eight lines. Valid for ISPF access only.
PF9	SWAP	Moves the cursor to the other logical screen when the display is in split screen mode. Valid for ISPF access only.
PF10	LEFT	Scrolls toward the first column of data. Left scrollable screens display a left arrow symbol (<) at the end of the message line. To scroll a specific number of columns, type the LEFT command with a numeric value in the COMMAND field. For example, type **LEFT 2** and press Enter to scroll left two columns.
PF11	RIGHT	Scrolls toward the last column of data. Right scrollable screens display a right arrow symbol (>) at the end of the message line. To scroll a specific number of columns, type the RIGHT command with a numeric value in the COMMAND field. For example, type **RIGHT 2** and press Enter to scroll right two columns.
PF12	RETRIEVE	Redisplays the last command entered in the COMMAND or OPTION field.
PF17	DISASM	Disassembles *all* assembler instructions in storage. Abend-AID for CICS displays this information on the Storage Disassembly screen, starting with the address specified. On Memory Display data fields only (for example, Word1), the DISASM command disassembles the *data* displayed in the field. For more information about this command, refer to "DISASM" on page 18-10.
PF18	HEXD	Displays storage in hexadecimal format when the cursor is positioned on an address, a table entry, or a control block symbol. For more information about displaying storage, refer to "Displaying Storage" on page 5-1.
PF19	DSECT	Displays storage in DSECT format when the cursor is positioned on an address, a table entry, or a control block symbol. For more information about displaying storage, refer to "Displaying Storage" on page 5-1.
PF20	INFO	Displays the Entry Information screen for the current dump.
PF21	WHO	For region dumps only. Lists TCBs (for any dump), TCAs (for CICS dumps only), and KETASKs (for CICS dumps only) that have addressability to the address specified with the WHO command or for the current cursor field. For more information about this command, refer to "WHO" on page 18-31.
PF22	MATCH	For region dumps only. Lists TCBs (for any dump), TCAs (for CICS dumps only), and KETASKs (for CICS dumps only) that have data matching the data at the address specified with the MATCH command or for the current cursor field. For more information about this command, refer to "MATCH" on page 18-20.
PF23	LPRINT	Prints a logical image of a screen to a sequential dataset. For more information about this command, refer to "LPRINT" on page 18-16.

Key	Command	Description
PF24	ASSIST	Displays the commands available for the current screen, scrollable table, or field. The position of the cursor determines which commands are listed. For example, to list the commands available for a specific field, position the cursor on that field and press the PF ASSIST key. If the field is located in a scrollable table, the commands available for that table are listed also. To list a screen's commands that are not specific to a particular field or scrollable table, position the cursor *off* any field in the screen's nonscrollable area. For more information about this command, refer to "ASSIST" on page 18-3.

Modifying PF Key Functions

Abend-AID for CICS provides an easy method for changing PF key functions.

Notes:

1. Because Abend-AID for CICS maintains its PF key definitions separately from a user's ISPF/PDF profile, the changes you make to the PF keys are valid only when using Abend-AID for CICS. Your ISPF/PDF default PF key definitions are unaffected.
2. You can assign multiple commands to a PF key by using the semicolon (;) as a delimiter between commands.

To change any PF key definition or label, perform the following steps:

1. Display the PF Key Definitions screen, shown in Figure 17-6, using one of the following methods:
   - Tab to the KEYS option on the User Controls menu, and press Enter.
   - Enter **KEYS** as a fast-path command.
   - Enter **=U.4** as a jump command.

Figure 17-6. PF Key Definitions and Labels Screen

```
 Abend-AID for CICS ----- PF Key Definitions - Primary ----------------------
COMMAND ===>

PF13 Definition... HELP
PF14 Definition... SPLIT
PF15 Definition... END
PF16 Definition... RETURN
PF17 Definition... DISASM
PF18 Definition... HEXD
PF19 Definition... DSECT
PF20 Definition... INFO
PF21 Definition... WHO
PF22 Definition... MATCH
PF23 Definition... LPRINT
PF24 Definition... ASSIST

PF13 Label...            PF14 Label...            PF15 Label...
PF16 Label...            PF17 Label...            PF18 Label...
PF19 Label...            PF20 Label...            PF21 Label...
PF22 Label...            PF23 Label...            PF24 Label...


Press Enter to display the alternate keys. Type END command (PF3) to save,
CANCEL to exit without saving, or DEFAULTS to reset the values.
```

2. Press Enter to display the alternate keys.
3. Type the new value or function for the associated PF key in the area directly following the key name. Refer to Figure 17-6 for the default PF key function names.
4. Press Enter. The PF Key Definitions and Labels screen displays the new PF key values.

5. When modifications are complete, press the END PF key to exit the screen and save your changes. (PF3 and PF15 are the defaults.) Or, enter **CANCEL** to exit the screen without saving your changes.
6. To restore the site-defined defaults if you saved your changes, enter **DEFAULTS** as a primary command.

Part 5.
Commands

Part 5 is a user reference that describes the product's primary commands. Page through Part 5 to become familiar with its content, but reading it from beginning to end is unnecessary.

Part 5 has one chapter:

Chapter 18, "Primary Commands"

Chapter 18 describes the syntax for all Abend-AID for CICS primary commands, such as ASSIST, FIND, HELP, PRINT, and WHO. Using these commands, you can perform a variety of functions, such as screen manipulation, cursor movement, and dump information access and display.

Chapter 18. Primary Commands

The primary commands listed in Table 18-1 perform specific functions. Commands shown in *italics* are always available. The remaining commands function only after you've selected an entry from the Abend-AID Directory and, in some cases, only if you're executing them from specific screens. To determine whether a command's availability is limited to specific screens, refer to its description in this chapter. For information about the Abend-AID Directory, refer to "Abend-AID Directory" on page 4-2.

To determine which commands are available on a particular screen while you are using Abend-AID for CICS, type **CMDLIST** or **HELP COMMANDS** in the COMMAND (or OPTION) field and press Enter. A scrollable display appears that lists the available fast-path and primary commands in alphabetical order.

To determine a particular command's syntax while you're using Abend-AID for CICS, type **HELP *cmdname*** in the COMMAND (or OPTION) field and press Enter. For example, **HELP FIND** displays a pop-up window describing the FIND command's syntax.

Note: Table 18-1 shows optional characters in lowercase. For example, typing **CO** is sufficient for identifying the CORE command to Abend-AID for CICS.

Table 18-1. Primary Commands

ABENDtxt	*ASSIST* (PF24)	*BACKWard*	BLOG
BORDERs	*BOTtom*	*CANcel*	CCMenu (PF6)
CHAIn	CLIP	CLR	CMDList
COMM	COre	*CRETRIEV*	*CURSOR*
DECOde	DEFAULTS	DISAsm (PF17)	*DOWN* (PF8)
DSECT (PF19)	*END* (PF3)	*EXIT*	*Find*
FORWard	GO	*HELP* (PF1)	HEXD (PF18)
IBMmsg	*INSTRUCT*	LEFT (PF10)	*LINECMDs*
LPRINT (PF23)	MAPd	MATch (PF22)	MODE
MSGHelp	*NEWs*	NOTE	+offset
-offset	@offset	*PRINT*	*RESet*
RESETDae	RESTore	*RETRIEVE* (PF12)	*RETURN* (PF4/PF16)
REXX	RFIND (PF5)	RIGHT (PF11)	SAVE
SORT	SOURCE	SRCINST	*TOP*
UNSTck	*UP* (PF7)	WHERE	WHO (PF21)

Reading Command Syntax

Syntax diagrams define primary command syntax. Minimum strings for commands are shown in UPPERCASE characters. Primary commands consist of the command itself and may include either required or optional parameter(s).

A *parameter* is either a keyword or a variable.

- Minimum strings for keywords are shown in UPPERCASE characters and must be spelled exactly as shown. Any remaining characters of the keyword may be included at your discretion. However, you cannot substitute another value.
- All *variables* are user-specified values and are printed in *lowercase* italics. For example, *dataset-name* indicates you are to substitute a value.

The syntax for commands is described in diagrams that help you visualize parameter use. The following example shows a command and a required parameter:

```
▶▶─COMMAND──parameter──▶◀
```

Read the diagrams from left to right and from top to bottom. These symbols help you follow the path of the syntax:

▶▶─ indicates the beginning of a statement.

─▶ indicates the statement is continued on the next line.

▶─ indicates the statement is continued from the previous line.

─▶◀ indicates the end of a statement.

Required parameters appear on the horizontal line (the main path):

```
▶▶─COMMAND──REQUIRED-KEYWORD──▶◀
```

Optional parameters appear below the main path. Default parameters that appear above the main path are optional; including or excluding them in the command has the same effect on the execution.

```
                          ┌─default-optional-var─┐
▶▶─COMMAND─┬──────────────┴──────────────────────┴──────────▶◀
           └─optional-var─┘
```

Vertically stacked parameters are mutually exclusive. If you must choose a parameter, one item of the stack appears on the main path. If the parameters are optional, the entire stack appears below the main path. If one of the parameters in a stack is the default, it appears above the main path:

```
                                                  ┌default-var1──┐
►►─COMMAND──┬KEYWORD1─┬──┬──────────────────┬──┬──┼──────────────┼──►◄
            └KEYWORD2─┘  ├optional-var1──────┤  ├─var1──────────┤
                         └optional-var2──────┘  └─var2──────────┘
```

ABENDTXT

For transaction abends only. The ABENDTXT command displays the Abend-AID for CICS diagnostic text for the specified transaction abend code.

```
►►─ABENDtxt──abendcode──►◄
```

abendcode

Specifies the name of an abend that is defined to Abend-AID for CICS.

ASSIST

The ASSIST command displays the commands that are available for the current screen, scrollable table, or field. Pressing the ASSIST PF key also executes this command. (PF24 is the default.) For example, to list the commands available for the current screen, tab to the COMMAND field and press the ASSIST PF key, or type **ASSIST** in the COMMAND field, and press Enter. To list the commands available for a specific field, tab to the field and press the ASSIST PF key, or type **ASSIST** in the COMMAND field, tab to the field, and press Enter. If the current screen, scrollable table, or field has no commands associated with it, a message is displayed indicating that the ASSIST function is not available.

```
►►─ASSIST──►◄
```

BACKWARD

The BACKWARD command is an alias for the UP command (PF7). Use this command to scroll the active display toward the top of a scrollable list of entries.

```
►►─BACKWard──┬──────┬──►◄
             └lines─┘
```

lines

Specifies the number of lines to scroll.

Example:

```
BACKW 8
```

This example scrolls the active display eight lines toward the top of the entries list.

BLOG

For ISPF access only. The BLOG command allows you to browse the problem log for the current dump using ISPF browse.

```
►►─BLOG──────►◄
```

BORDERS

The BORDERS command shows or hides the side and bottom borders of all screens in the ***current*** session. (The top border cannot be hidden.) For information about setting the default values for this command for *all* sessions, refer to "User Profile Screen" on page 17-1.

```
►►─BORDERs─┬─ON──┬──┬──────────┬──►◄
           └─OFF─┘  ├─BOTTOM───┤
                    └─SIDE─────┘
```

ON

Displays the borders on all screens in the current session.

OFF

Removes the borders on all screens in the current session.

BOTTOM

Specifies that only the bottom border is affected by the command.

SIDE

Specifies that only the side borders are affected by the command.

BOTTOM

The BOTTOM command scrolls to the bottom of a screen's scrollable area.

```
►►─BOTtom──────►◄
```

CANCEL

The CANCEL command cancels the current operation without saving the data, and then redisplays the previous menu or screen.

```
▶▶─CANcel──────▶◀
```

CCMENU

For transaction abends only. The CCMENU command displays the CICS Abend-AID transitional menu. This pop-up menu displays CICS Abend-AID commands and their equivalents in Abend-AID for CICS. Pressing the CCMENU PF key also executes this command. (PF6 is the default.) Figure 18-1 shows the CICS Abend-AID transitional menu.

```
▶▶─CCMenu──────▶◀
```

Figure 18-1. CICS Abend-AID Transitional Menu

```
 Abend-AID for CICS --------- Diagnostic Summary --------- Row 000001 of 000066
COMMAND ===>                                                SCROLL ===> PAGE

An ASRA abend occurred in program CCAADEMO.  The abending transaction was
AADM running at terminal A494.
                  +---------- Row 00001 of 00020 -----------+
                  | 1  or DIAG   - Diagnostic Summary       |
Analysis of the a | 2  or NSI    - Diagnostic Summary       |
                  | 3  or REGS   - Registers                |
The Data Exceptio | 4  or TRACE  - CICS Trace               | empted on a
field that does n | 5  or ENQ    - Enqueues Held            |  invalid digit
(not 0-9), or its | 6  or EIB    - User EIB                 | , OR D).
                  | 7  or PROG   - Program Information Menu |
The abending stat | 8  or PLIST  - Program Link Summary     |
                  | 9  or PSTOR  - Program Link Summary     |
000400            | 10 or LINK   - Program Link Summary     | A-RATE
                  | 11 or EXTER  - Program Link Summary     |
This statement is | Tab to the number or command  Enter to  | " of program
CCAADEMO.         | process it.                             |
                  | Help=PF1   End=PF3              More... |
                  +-----------------------------------------+

     Current values of fields on abending statement:
```

On the pop-up menu, tab to either the number or mnemonic of the CICS Abend-AID command. Press Enter to display the Abend-AID for CICS screen that is most closely associated with the former CICS Abend-AID display.

CHAIN

The CHAIN command runs a control block chain based on user-specified parameters. For each control block located, the chain facility creates a paperclip entry in the current paperclip table. The comments associated with the paperclip entries reflect the entry number of the chain, with the user-specified chain prefix as the chain name.

If you type the CHAIN command without one of its optional parameters, Abend-AID for CICS displays the Chain Command Parameters screen. This screen includes entry fields for specifying all the parameters associated with the CHAIN command, including the chain prefix and the chain termination value. For more information about this screen, refer to "Running Control Block Chains" on page 5-8.

```
►►─CHAIn──┬──────────┬──┬──────────┬──►◄
          └address───┘  └offset────┘
```

address

Specifies the address at which the CHAIN command begins executing. The address must be a valid hexadecimal address.

offset

The link address offset that specifies the address of the fullword pointer that points to the control block in the chain. This parameter is processed based on whether the addressing mode is 24-bit or 31-bit, as set on the CHAIN Command Parameters screen.

Example:

```
CHAIN 00007000 +10
```

This example specifies the starting address 00007000 and the link address offset +10.

CLIP

Valid on the Memory Display and Storage Map Display screens only. The CLIP command displays paperclip entries.

```
          ┌FIRST─┐
►►─CLIP───┼──────┼──────►◄
          ├LAST──┤
          ├LOCK──┤
          ├NEXT──┤
          └PREV──┘
```

FIRST

Displays the first entry in the paperclip table. Executing the CLIP command without any keyword parameter accomplishes the same result.

LAST

Displays the last entry in the paperclip table.

LOCK

Locks the current paperclip entry.

NEXT

Displays the next entry in the paperclip table.

PREV

Displays the previous entry in the paperclip table.

CLR

The CLR command clears the current paperclip table by deleting all entries.

```
▶▶─CLR──────────▶◀
```

CMDLIST

The CMDLIST command lists the primary and fast-path commands that you can execute from within Abend-AID for CICS.

A small subset of commands are always available, even when you have not selected a dump from the Abend-AID Directory. A few additional commands become available once you select a *non-CICS* entry from the directory. Most commands, however, become available only after you select a CICS Transaction Server for z/OS or OS/390 entry from the directory.

```
▶▶─CMDList──────▶◀
```

Figure 18-2 is an example of the information displayed when you invoke the CMDLIST command. You can tab to any command and press Enter to display help for that command.

Figure 18-2. Command List Example

```
 Abend-AID for CICS ------ Tutorial - Command List ------ Row 000001 of 000175
COMMAND ===>                                                SCROLL ===> PAGE

********  ******************************************************************
AID       Display AID Summary
AP        Display Application Domain menu
APSUMM    Display Transaction Manager Summary
ASSIST    Assist
ATTRBUTE  Display Screen Attribute Options
BACKWARD  Scroll Up
BLOG      Browse Problem Log for Current Dump
BORDERS   Control Screen Borders
BOTTOM    Display Bottom of Scrollable List
CANCEL    Cancel
CB        Display Control Blocks/Storage
CC        Display Local Catalog Anchor Block
CHAIN     Run chain
CHANGES   Display CICS Change Summary
CICSENV   Display CICS Environment Summary
CICSINFO  Display CICS Information Menu
CLR       Clear the current paperclip table
CMDLIST   Display Command List
CMXT      Display Transaction Manager CMXT Counts
Press Enter on a command to display Help for that command.
```

COMM

Valid on the Memory Display screen only. The COMM command adds a user-specified comment to a paperclip entry.

```
►►─COMM──comment──────►◄
```

comment

User-specified text. The maximum comment length allowed is 35 characters (including spaces).

CORE

The CORE command displays the storage found at the exact location specified. However, if you type the CORE command without one of its optional parameters, Abend-AID for CICS displays the Storage Map Display. This screen lists in hexadecimal format all allocated and unallocated segments of storage for the current dump.

```
►►─COre──┬──────────────────────┬──►◄
         ├─address──────────────┤
         ├─S/symbolname─────────┤
         └─tabletype──tableentry┘
```

address

The address must be in hexadecimal.

symbolname

For region dumps only. The literal **S/** must precede the symbol name.

tabletype tableentry

A space or a period separates the table type from the table entry, for example, PCTE CEMT or PCTE.CEMT. PCTE is the table type, and CEMT is the entry in the table.

Note: Use field help to determine whether a field contains a table entry or a symbol.

Example 1:

```
CORE 002744F0
```

Example 1 displays the storage at hexadecimal address 002744F0.

Example 2:

```
CORE S/TCA0009
```

Example 2 displays the storage at symbol TCA0009.

CRETRIEV

The CRETRIEV command functions in two ways, depending on the position of the cursor when you enter the command.

If the cursor is in the COMMAND (or OPTION) field, CRETRIEV functions like the RETRIEVE command. That is, the most recently entered commands are redisplayed on the command line, one command at a time, in the reverse sequence in which they were entered (last-in, first-out). This command allows you to easily recall a command for resubmission from the command line. You may edit the command before entering it.

If the cursor is not in the COMMAND (or OPTION) field, CRETRIEV functions like the CURSOR command. That is, the cursor is moved to the first input field on the menu or screen being displayed, usually the COMMAND (or OPTION) field. When used in this way, CRETRIEV functions like a HOME key.

```
▶▶─CRETRIEV──────▶◀
```

CURSOR

The CURSOR command is used to move the cursor to the first input field on the menu or screen being displayed, usually the COMMAND (or OPTION) field. The CURSOR command functions like a HOME key. It is usually assigned to a specific PF key. For more information about modifying PF Key assignments, refer to “Modifying PF Key Functions” on page 17-7.

```
▶▶─CURSOR────────▶◀
```

DECODE

The DECODE command disassembles a *single* assembler instruction at the address specified, and it places this information on the message line of the current screen.

Note: On Memory Display data fields only (for example, Word1), the DECODE command disassembles the *data* displayed in the field.

Methods of executing this command include the following:

- *From any* Abend-AID for CICS *screen* — Enter **DECODE**, a space, and the hexadecimal address of the instruction as a primary command.
- *From any tab-selectable field listing a hexadecimal address* — Type **DECODE** in the COMMAND field, position the cursor on the hexadecimal address, and press Enter.
- *From the Memory Display screen* — Type **DECODE** in the COMMAND field, position the cursor on the first byte of the instruction to decode, and press Enter.

Note: To decode all assembler instructions in storage for the current dump, use the DISASM command. Refer to “DISASM” on page 18-10 for specifics.

```
▶▶─DECOde──┬──────────┬──▶◀
           └─address──┘
```

address

The hexadecimal address of the instruction you want to decode.

DEFAULTS

Valid on the the User Profile, Screen Attributes, and the PF Key Definitions screens only. The DEFAULTS command restores the site-defined defaults for these screens if you changed them.

```
►►─DEFAULTS──►◄
```

DISASM

The DISASM command disassembles *all* assembler instructions in storage. It displays this information on the Storage Disassembly screen, starting with the address specified. Refer to "Storage Disassembly Screen" on page 9-13 for an explanation of this screen.

Note: On Memory Display data fields only (for example, Word1), the DISASM command disassembles the *data* displayed in the field.

You can execute this command in several ways:

- *From any* Abend-AID for CICS *screen* — Enter **DISASM**, a space, and the hexadecimal address of the instruction as a primary command.
- *From any tab-selectable field listing a hexadecimal address* — Perform one of the following:
  - Type **DISASM** in the COMMAND (or OPTION) field, position the cursor on the hexadecimal address, and press Enter.
  - Position the cursor on the hexadecimal address and press the DISASM PF key. (PF17 is the default.)
- *From the Memory Display screen* — Perform one of the following:
  - Type **DISASM** in the COMMAND field, position the cursor on the first byte of the first instruction you want to display, and press Enter.
  - Position the cursor on the first byte of the first instruction you want to display and press the DISASM PF key.

Use the UP and DOWN PF keys to scroll through the Storage Disassembly screen. (PF7 and PF8 are the defaults.)

Note: To decode a single instruction, use the DECODE command. Refer to "DECODE" on page 18-9 for specifics.

```
►►─DISAsm──┬──────────┬──►◄
           └address───┘
```

address

The hexadecimal address at which you want the DISASM command to start. When the Storage Disassembly screen appears, the decoded instruction at that address is listed first.

DOWN

The DOWN command scrolls the active screen display toward the bottom of a scrollable list of entries. Pressing the DOWN key also executes this command. (PF8 is the default.)

```
►►─DOWN──┬──────────────┬──►◄
         └scrollamount──┘
```

scrollamount

Specifies the number of rows to scroll toward the bottom of a scrollable list of entries.

Example:

```
DOWN 12
```

This example scrolls the active screen display 12 rows toward the bottom of a scrollable list of entries.

DSECT

The DSECT command displays storage in DSECT format. To use the command, type **DSECT** in the COMMAND field; position the cursor on an address, a table entry, or a control block symbol; and then press Enter. Pressing the DSECT PF key also executes this command. (PF19 is the default.)

Note: The DSECT command functions only in fields for which a control block has been defined. To determine if the command is available, use the ASSIST command. Refer to "ASSIST" on page 18-3 for specifics.

For the list of DSECTs that Abend-AID for CICS supports, refer to "Supplied Abend-AID for CICS DSECTs" on page 6-3.

```
►►─DSECT──►◄
```

END

The END command terminates the current operation and redisplays the previous menu or screen. The END command is usually assigned to a PF key. (The default is PF3.)

```
►►─END──►◄
```

EXIT

The EXIT command terminates the current session.

```
►►─EXIT──────►◄
```

FIND

The FIND command locates hexadecimal or character data strings. Its function and syntax depend on the screen from which you are executing the command. By default, the FIND command searches 2500 lines at a time. To change this value, modify the user profile FIND command line limit default value. Refer to "User Profile Screen" on page 17-1 for additional information.

Note: The FIND command searches to the end of the page on which the last line of the search is located. For example, if you change the FIND command line limit to 5000, executing the command actually searches more than 5000 lines, unless the 5000th line happens to be the last line on the page.

Executing FIND from the Memory Display

On the Memory Display screen, the FIND command locates hexadecimal or character data based on selection parameters you specify. If you execute FIND without parameters, the Find for Storage Display screen appears. This screen allows you to update FIND command defaults for use on the Memory Display. For more information about the Find for Storage Display screen, refer to "Setting FIND Command Parameters" on page 5-5.

```
                                  ┌NEXT─┐
►►─Find──┬──────────────────────┬──┼─────┼──►◄
         ├─C-'string 1'─┤       ├──┼PREV─┼
         ├─X-'string 2'─┤       ├──┼FIRST┼
         └─T-'string 3'─┘       └──┼LAST─┼
                                  └─────┘
```

C'string 1'

Finds the character data identified as *string 1*.

X'string 2'

Finds the hexadecimal data identified as *string 2*.

T'string 3'

Finds the mixed-case character data identified as *string 3*.

NEXT

Finds the next occurrence of the string. Executing FIND without a directional keyword (NEXT, PREV, FIRST, LAST) accomplishes the same result.

PREV

Finds the previous occurrence of the string.

FIRST

Finds the first occurrence of the string.

LAST

Finds the last occurrence of the string.

Example 1:

```
F C'DFH'
```

Example 1 finds the character string DFH.

Example 2:

```
F X'D010' PREV
```

Example 2 finds the previous occurrence of the hexadecimal string D010. PREV overrides the default direction and updates the Find for Storage Display screen.

Executing FIND from Screens Other Than the Memory Display

On screens other than the Memory Display, the FIND command locates specified data strings. (Not all screens support the FIND command.) If you execute FIND without specifying a data string, an error message appears.

Note: Because hexadecimal values are considered data strings on screens other than the Memory Display, enclosing the hexadecimal value with **x**' ' is not necessary.

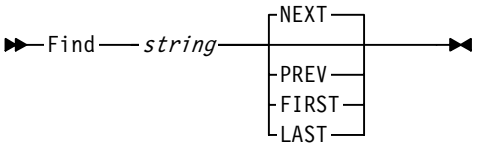

string

Finds the specified data string.

NEXT

Finds the next occurrence of the data string. Executing the command without a directional keyword (NEXT, PREV, FIRST, LAST) accomplishes the same result.

PREV

Finds the previous occurrence of the data string.

FIRST

Finds the first occurrence of the data string.

LAST

Finds the last occurrence of the data string.

Example:

```
F DELETED LAST
```

This example finds the last occurrence of data string DELETED.

FORWARD

The FORWARD command is an alias for the DOWN command. (PF8 is the default.). Use this command to scroll the active display toward the bottom of a scrollable list of entries.

```
►►─FORWard──┬──────┬──►◄
            └lines─┘
```

lines

Specifies the number of lines to scroll.

Example:

```
FORW 8
```

This example scrolls the active display eight lines toward the bottom of the entries list.

GO

Valid on the Print Options and Initiation screen only. The GO command processes the print dataset using the print options specified on the Print Options and Initiation screen.

```
►►─GO──►◄
```

HELP

The HELP command displays help text that describes a user-selected screen, field, primary command, fast-path command, or system message. Pressing the HELP PF key also executes this command. (PF1 and PF13 are the defaults.)

To access help for the current screen, enter **HELP** as a primary command. For field help, type **HELP**, in the COMMAND field, move the cursor to the desired field, and press Enter. For command help, enter **HELP** *cmdname*. For message help, type **HELP**, in the COMMAND (or OPTION) field, move the cursor to the message text, and press Enter.

Note: Use the MSGHELP command to display help text for a particular Abend-AID for CICS message number. For specifics, refer to "MSGHELP" on page 18-21.

For more information about accessing online help, refer to "Online Help" on page 1-12.

```
►►─HELP──┬──────────┬──►◄
         ├─COMMANDS─┤
         └cmdname───┘
```

COMMANDS

Displays the list of Abend-AID for CICS primary and fast-path commands.

cmdname

The name of the primary or fast-path command for which Abend-AID for CICS displays help text.

Example:

```
HELP FIND
```

This example displays help text for the FIND command.

HEXD

The HEXD command displays storage in hexadecimal format. To use the command, type **HEXD** in the COMMAND field, position the cursor on an address, a table entry, or a control block symbol; and then press Enter. Pressing the HEXD PF key also executes this command. (PF18 is the default.)

For more information about displaying storage, refer to "Displaying Storage" on page 5-1.

```
►►─HEXD──────►◄
```

IBMMSG

For transaction abends only. The IBMMSG command displays the IBM message text for the specified CICS abend code.

```
►►─IBMmsg──abendcode──────►◄
```

abendcode

Specifies the name of a valid CICS abend code.

INSTRUCT

The INSTRUCT command shows or hides the instructional text on all screens in the *current* session. For information about setting the INSTRUCT default value for *all* sessions, refer to "User Profile Screen" on page 17-1.

```
►►─INSTRUCT──┬─ON──┬──────►◄
             └─OFF─┘
```

LEFT

The LEFT command scrolls the active screen display toward the first column of a scrollable list of entries. Pressing the LEFT PF key also executes this command. (PF10 is the default.)

```
►►─LEFT──┬──────────────┬──►◄
         └scrollamount──┘
```

scrollamount

Specifies the number of columns the active screen display should be scrolled toward the first column of a scrollable list of entries.

Example:

```
LEFT 12
```

This example scrolls the active screen display 12 columns toward the first column of a scrollable list of entries.

LINECMDS

The LINECMDS command shows or hides the line commands for all screens in the *current* session. For information about setting the LINECMDS default value for *all* sessions, refer to "User Profile Screen" on page 17-1.

```
►►─LINECMDs──┬─ON──┬──►◄
             └─OFF─┘
```

LPRINT

The LPRINT command prints a logical image of a screen to a sequential dataset. Pressing the LPRINT PF key also executes this command. (PF23 is the default). A logical image includes all data associated with a screen, regardless of how much is currently displayed (contrasted to a physical image, which includes only the data currently displayed). A physical print is accomplished using the PRINT command.

When used *without* an optional parameter, LPRINT prints a logical image of the screen currently displayed. When used *with* an optional parameter, LPRINT prints a logical image of the screen specified by the parameter. Certain exceptions apply. A *physical* image of a screen is always printed, even if a logical print is requested, when the screen to be printed is one of the following:

- A nonscrollable screen
- A memory display screen
- A storage disassembly screen.

These exceptions apply both to currently displayed screens and to those specified by a parameter.

Screens printed using the LPRINT command are written to a dataset governed by the Print Options and Initiation screen. You may access this screen using the LIST fast-path command. The Print Options and Initiation screen controls various print options including the disposition of the dataset. Printing is initiated using the GO command or by logging off. You must use this screen to print any datasets created using the LPRINT command. For more information about displaying print output options or the Print Options and Initiation screen, refer to "Print Options and Initiation Screen" on page 7-1.

For more information about using the LPRINT command, refer to Chapter 7, "Printing Abend-AID for CICS Information".

```
▶▶--LPRINT──┬──────────────┬──┬──────────┬──────────────────────────────────▶
            └fastpathcommand┘  ├#ALL──────┤
                               ├#DB2ALL───┤
                               ├#SUMMARY──┤
                               └#DB2SUMM──┘

▶──┬──────────────┬──┬──────────────────────────────────────────────────────▶
   └$controlblockname┘  └@symbolname 'storage comment'┘

▶──┬──────────────────────────────────────────────────────────────────────▶◀
   └@address.length 'storage comment'┘
```

fastpathcommand

The fast-path command of the screen to be printed.

#ALL

Valid for transaction entries only. Prints a *complete* transaction report. Refer to "Complete Transaction Abend Report" on page 7-5 for a description of what is contained in this report.

#DB2ALL

Valid for transaction entries only. Prints a *complete* transaction report, including DB2 information if available. Refer to "Complete DB2 Transaction Abend Report" on page 7-6 for a description of what is contained in this report.

#SUMMARY

Prints a summary report. Refer to "Transaction Abend Summary Report" on page 7-6 and "Region Dump Summary Report" on page 7-8 for a description of what is contained in a summary report, by entry type.

#DB2SUMM

Valid for transaction entries only. Prints a summary report, including the DB2 information if available. Refer to "DB2 Transaction Abend Summary Report" on page 7-7.

$controlblockname

Specifies to print the DSECT format of the named control block. Only DSECTS of single element control blocks (CSA or CSAOPFL, for example) can be printed this way. For other types of control blocks (FCT, for example), you must first display the control block's DSECT screen and then use the LPRINT command. Refer to Chapter 5, "Accessing Storage Information" for additional information about control blocks.

@symbolname 'storage comment'

Specifies to print the hexadecimal storage associated with the named symbol. The symbol name is required but the storage comment (limited to 66 characters) is optional and, if specified, must be surrounded by single quotation marks. Refer to Appendix B, "Symbols List" for a list of valid symbols.

@address.length 'storage comment'

Specifies to print the hexadecimal storage at the given address for the given length. The address is required and must be in hexadecimal notation. The default length is 4096 and the maximum length allowed is 1,048,576 (1 megabyte). The storage comment (limited to 66 characters) is optional and, if specified, must be surrounded by single quotation marks.

MAPD

The MAPD command maps storage into DSECT format. Typing the command without any parameters, positioning the cursor on a hexadecimal address, and pressing Enter displays the System DSECT Table, which lists the DSECTs available for the CICS release of the dump selected.

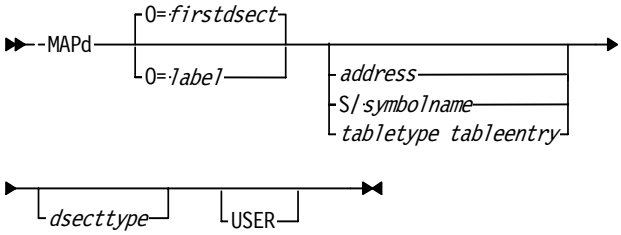

firstdsect

The first DSECT in a DSECT member. The literal **O=** ("origin equals") must precede the name of the first DSECT. MAPD automatically includes the first DSECT by default if you include neither the first DSECT, nor a DSECT *label* parameter in the command.

label

First 30 bytes of the DSECT statement's Name field. The literal **O=** must precede the name of the DSECT. Use the *label* parameter to view DSECTs other than the first DSECT in a DSECT member.

address

Maps storage at the hexadecimal address specified. You cannot include this parameter in a MAPD command that uses the *tabletype* and *tableentry* parameters.

symbolname

Maps storage at the symbol name specified. The literal **S/** must precede the symbol name. You cannot include this parameter in a MAPD command that uses the *tabletype* and *tableentry* parameters.

tabletype tableentry

Maps storage at the table specified. A space separates the table type from the table entry, for example, PCTE CEMT. PCTE is the table type, and CEMT is the entry in the table. You cannot include these parameters in a MAPD command that uses either the *address* or the *symbolname* parameter.

dsecttype

DSECT type. If you do not specify a DSECT type, Abend-AID for CICS automatically displays the System DSECT Table, which lists the DSECT types available for the current dump.

To select one from those listed, position the cursor on the desired DSECT type and press Enter. Use the UP and DOWN PF keys to scroll the list. (PF7 and PF8 are the defaults.) After you select the DSECT type, the applicable DSECT screen automatically appears.

For the list of valid DSECT types, you can also refer to "Supplied Abend-AID for CICS DSECTs" on page 6-3

USER

This literal specifies that the storage is mapped against a user-defined DSECT type. For information about defining your own DSECTs, refer to the *Abend-AID for CICS Installation and Customization Guide*.

Example 1:

```
MAPD
```

Example 1 displays the System DSECT Table, which lists the DSECTs available for the currently selected dump.

Example 2:

```
MAPD 0045FD34 FCTE
```

Example 2 maps the storage associated with hexadecimal address 0045FD34 into the FCT entry DSECT format.

Example 3:

```
MAPD S/TCA0009 UTCA
```

Example 3 maps the storage associated with symbol TCA0009 into the user TCA DSECT format.

Example 4:

```
MAPD PCTE CSTP
```

Example 4 maps the storage associated with table entry CSTP into the PCT entry DSECT format.

Example 5:

```
MAPD 007D0010 MYDSECT USER
```

Example 5 maps the storage associated with hexadecimal address 007D0010 into the user-defined DSECT specified by the first DSECT in member MYDSECT.

Example 6:

```
MAPD O=YOURDSECT 007D00B0 MYDSECT USER
```

Example 6 maps the storage associated with hexadecimal address 007D00B0 into the user-defined DSECT specified by starting label YOURDSECT in member MYDSECT.

MATCH

For region dumps only. The MATCH command searches the dump for data matching user-specified parameters. Pressing the MATCH PF key also executes this command. (PF22 is the default.)

When a match is found, Abend-AID for CICS displays the Storage Addressability Summary screen. On this screen are TCBs (for all dumps), TCAs (for CICS dumps only), and KETASKs (for CICS dumps only) that have addressability to the data specified in the command. To display the next occurrence of matching data on this screen, press Enter.

```
                 ┌default ##┐
▶▶─MATch─────────┼──────────┼──────────────────▶◀
                 │##        │
                 │C'string 1'│
                 └X'string 2'┘
```

default ##

Searches an address or symbol to match the first occurrence of the number of bytes of data specified as the default in the user profile. The supplied default is 4 bytes. Executing the MATCH command without any parameter accomplishes the same result.

Note: You can change the default MATCH command search length on the User Profile screen. For specifics, refer to "User Profile Screen" on page 17-1.

To specify the location, place the cursor at the address or symbol *before* pressing Enter.

##

Matches the number of bytes specified (26 maximum) at a symbol or address. To specify the location, place the cursor at the address or symbol *before* pressing Enter.

C'string 1'

Specifies to match the character string identified as *string 1*.

X'string 2'

Specifies to match the hexadecimal string identified as *string 2*.

Example 1:

```
MATCH
```

Example 1 matches the default number of bytes of data found at the address or symbol on which the cursor is positioned.

Example 2:

```
MATCH 6
```

Example 2 matches the first six bytes of data found at the address or symbol on which the cursor is positioned.

Example 3:

```
MATCH C'CICSTEST'
```

Example 3 searches for a match to the character string CICSTEST.

Example 4:

```
MATCH X'C1000000F0F3'
```

Example 4 searches for a match to the hexadecimal string C1000000F0F3.

MODE

The MODE command sets the Memory Display navigation mode to either 31-bit or 64-bit for the current session.

```
►►─MODE──┬─31─┬──►◄
         └─64─┘
```

MSGHELP

The MSGHELP command displays the help text associated with aspecific Abend-AID for CICS system message number.

Note: Use the HELP command to display help text for screens, fields, commands, and currently displayed system messages. For specifics, refer to "HELP" on page 18-14.

```
►►─MSGHelp──messageID──►◄
```

messageID

The number associated with the system message entered minus the first 3 characters, and the last character. For example, the messageID for message number ERWSI0052E is SI0052. To display help text for the currently displayed message, you also can enter **HELP**, move the cursor to the displayed message, and press Enter.

Example:

```
MSGHELP SI0052
```

This example displays the help text associated with system message ERWSI0052E.

NEWS

The NEWS command displays a pop-up window with a summary of changes for the current Abend-AID for CICS release. The first time you log onto Abend-AID for CICS, the NEWS pop-up window is automatically displayed. Thereafter, enter the command on the Command line of any Abend-AID for CICS screen to display the summary of changes at any time.

```
▶▶─NEWs──────▶◀
```

NOTE

For ISPF access only. The NOTE command accesses the problem log for the current dump using ISPF edit. All commands function as in ISPF.

```
▶▶─NOTE──────▶◀
```

@offset

Valid on the Memory Display screen only. The @offset command positions the display at the fullword address at the hexadecimal offset.

```
▶▶─@offset───▶◀
```

offset

Hexadecimal offset number

-offset

Valid on the Memory Display and Storage Disassembly screens only. The -offset command scrolls the display backward the specified hexadecimal offset. Use the RESET primary command to reset the display to offset zero. Refer to "RESET" on page 18-25 for additional information.

```
▶▶─-offset───▶◀
```

offset

Hexadecimal offset number

+offset

Valid on the Memory Display and Storage Disassembly screens only. The +offset command scrolls the display forward the specified hexadecimal offset. Use the RESET primary command to reset the display to offset zero. Refer to "RESET" on page 18-25 for additional information.

```
▶▶─ +offset ──▶◀
```

offset

Hexadecimal offset number

PRINT

The PRINT command prints a physical image of a screen to a sequential dataset. A physical image includes only the data currently displayed (contrasted to a logical image, which includes all data associated with a screen). A logical print is accomplished using the LPRINT command.

When used *without* an optional parameter, PRINT prints a physical image of the screen currently displayed. When used *with* an optional parameter, PRINT prints a logical image of the screen specified by the parameter. Certain exceptions apply. A *physical* image of a screen is always printed, even if a logical print is requested, when the screen to be printed is one of the following:

- A nonscrollable screen
- A memory display screen
- A storage disassembly screen.

These exceptions apply both to currently displayed screens and to those specified by a parameter.

Screens printed using the PRINT command are written to a dataset governed by the Print Options and Initiation screen. You may access this screen using the LIST fast-path command. The Print Options and Initiation screen controls various print options including the disposition of the dataset. Printing is initiated using the GO command or by logging off. You must use this screen to print any datasets created using the PRINT command. For more information about displaying print output options or the Print Options and Initiation screen, refer to "Print Options and Initiation Screen" on page 7-1.

For more information about using the PRINT command, refer to Chapter 7, "Printing Abend-AID for CICS Information".

```
▶▶--PRINT──┬──────────────┬──┬──────────┬──────────────────────────────────────▶
           └fastpathcommand┘  ├#ALL──────┤
                              ├#DB2ALL───┤
                              ├#SUMMARY──┤
                              └#DB2SUMM──┘

▶──┬──────────────┬──┬──────────────────────────────────┬──────────────────────▶
   └$controlblockname┘  └@symbolname 'storage comment'┘

▶──┬──────────────────────────────────────────────┬──────────────────────────▶◀
   └@address.length 'storage comment'┘
```

fastpathcommand

The fast-path command of the screen to be printed.

#ALL

Valid for transaction entries only. Prints a *complete* transaction report. Refer to "Complete Transaction Abend Report" on page 7-5 for a description of what is contained in this report.

#DB2ALL

Valid for transaction entries only. Prints a *complete* transaction report, including DB2 information if available. Refer to "Complete DB2 Transaction Abend Report" on page 7-6 for a description of what is contained in this report.

#SUMMARY

Prints a summary report. Refer to "Transaction Abend Summary Report" on page 7-6 and "Region Dump Summary Report" on page 7-8 for a description of what is contained in a summary report, by entry type.

#DB2SUMM

Valid for transaction entries only. Prints a summary report, including the DB2 information if available. Refer to "DB2 Transaction Abend Summary Report" on page 7-7.

$controlblockname

Specifies to print the DSECT format of the named control block. Only DSECTS of single element control blocks (CSA or CSAOPFL, for example) can be printed this way. For other types of control blocks (FCT, for example), you must first display the control block's DSECT screen and then use the LPRINT command. Refer to Chapter 5, "Accessing Storage Information" for additional information about control blocks.

@symbolname 'storage comment'

Specifies to print the hexadecimal storage associated with the named symbol. The symbol name is required but the storage comment is optional (limited to 66 characters) and, if specified, must be surrounded by single quotation marks. Refer to Appendix B, "Symbols List" for a list of valid symbols. To display storage for other types of control blocks, you must supply the storage address and length of the control block (see next parameter).

@address.length 'storage comment'

Specifies to print the hexadecimal storage at the given address for the given length. The address is required and must be in hexadecimal notation. The default length is 4096 and the maximum length allowed is 1,048,576 (1 megabyte). The storage comment is optional (limited to 66 characters) and, if specified, must be surrounded by single quotation marks.

RESET

Valid only on the Memory Display and Storage Disassembly screens, and on any screen that supports masking and sorting. On the Memory Display and Storage Disassembly screens, enter the RESET command without a parameter to reset the display to offset zero. On screens that support masking and sorting, you can enter this command without a parameter to reset both masking and sorting, or specify the parameter to reset only one or the other.

```
►►─RESet──┬──────┬──────►◄
          ├─MASK─┤
          └─SORT─┘
```

MASK

Resets the column mask only.

SORT

Resets the column sort only.

RESETDAE

Upon execution, the RESETDAE command increments by one the Dump Analysis and Elimination (DAE) sequence number when an internal server dump is taken. Updating the DAE sequence number ensures that the next dump will not be suppressed by the operating system's DAE facility. This command is available for use with the Abend-AID for CICS viewing server and transaction dump capture address space (TDCAS).

Normally Compuware Technical Support will ask you to execute this command to obtain an SVC dump to help resolve a problem when the prior SVC dump is no longer available and DAE is suppressing duplicate SVC dumps.

```
►►─RESETDae──►◄
```

RESTORE

The RESTORE command restores a saved paperclip table from the Saved Paperclip List. Once restored, the table becomes the current paperclip table. For information about the paperclip list, refer to "Saved Paperclip List" on page 5-7.

```
►►─RESTore──tablename──────►◄
```

tablename

One- to eight-character name of the paperclip table.

Example:

```
RESTORE PFHTBL12
```

This example restores paperclip table PFHTBL12 from the Saved Paperclip List.

RETRIEVE

The RETRIEVE command displays the most recently entered commands on the command line, one command at a time, in the reverse sequence in which they were entered (last-in, first-out). This command allows you to easily recall a command for resubmission from the command line. You can edit the command before entering it. Pressing the RETRIEVE PF key also executes this command. (PF12 is the default.)

```
►►─RETRIEVE──►◄
```

RETURN

The RETURN command causes an immediate return to the Abend-AID for CICS Primary Options menu. Pressing the RETURN PF keys also executes this command. (PF4/PF16 are the defaults.)

```
►►─RETURN──►◄
```

REXX

The REXX command processes REXX EXECs for selected Abend-AID for CICS transaction or region dumps.

```
►►─REXX──execname──┬──────┬──►◄
                   └─data─┘
```

execname

One- to eight-character member name of the REXX EXEC from a dataset allocated to the viewing server's SYSEXEC DD statement during Abend-AID for CICS installation.

data

Optional parameter that specifies the data to be passed to the EXEC.

Example:

```
REXX CHECK CSA
```

This example processes the EXEC named CHECK, which uses the string 'CSA' as input.

RFIND

The RFIND command repeats the previously issued FIND command. Pressing the RFIND PF key also executes this command. (PF5 is the default.)

```
►►─RFIND──────►◄
```

RIGHT

The RIGHT command scrolls the active screen display toward the last column of a scrollable list of entries. Pressing the RIGHT PF key also executes this command. (PF11 is the default.)

```
►►─RIGHT──┬──────────────┬──►◄
          └─scrollamount─┘
```

scrollamount

Specifies the number of columns the active screen display should be scrolled toward the last column of a scrollable list of entries.

Example:

```
RIGHT 12
```

This example scrolls the active screen display 12 columns toward the last column of a scrollable list of entries.

SAVE

The SAVE command saves the current paperclip table to the Saved Paperclip List. For information about the paperclip list, refer to "Saved Paperclip List" on page 5-7.

```
►►─SAVE──┬──────────┬──►◄
         └─tablename─┘
```

tablename

One- to eight-character name of the paperclip table. If the current paperclip table has been previously restored, you can type the SAVE command without specifying a table name. Abend-AID for CICS will save the table to the same name from which it was

restored. However, if the current paperclip table has *not* been previously restored and you type the SAVE command without a table name, the command saves the paperclip table under your user ID.

Example:

```
SAVE PFHTBL12
```

This example saves the current paperclip table as PFHTBL12 on the Saved Paperclip List.

SORT

The SORT command reorganizes a screen's scrollable data according to the column specified in the *column-identifier* parameter. If you do not specify a parameter, Abend-AID for CICS displays a window from which you can select a valid column-identifier by pressing Enter. As an alternative, you can issue the SORT command without a parameter by typing **SORT** in the COMMAND field, positioning the cursor on the column that you want the data sorted by, and then pressing Enter.

Use the space bar or Erase EOF key to clear the column mask for individual columns. Use the RESET primary command to reset all columns to their original settings, as described in "RESET" on page 18-25.

```
▶▶─SORT──columnidentifier──────────▶◀
```

columnidentifier

Unique identifier of the column heading.

SOURCE

For transaction abends only. The SOURCE command lets you toggle on and off the display of source processing for Abend-AID for CICS transaction abends. The command affects only the currently selected transaction abend. If the program for the selected abend was not compiled using the Compuware COBOL language processor or the Compuware PL/I language processor, the SOURCE command has no effect.

```
▶▶─SOURCE─┬─ON────────────┬──▶◀
          ├─OFF───────────┤
          └─RESET─────────┘
```

ON

Displays source processing for the transaction abend.

OFF

Suppresses source processing for the transaction abend.

RESET

Returns source processing for the transaction abend to its original setting before the entry of the SOURCE command.

SRCINST

For transaction abends only. The SRCINST command lets you toggle on and off the display of the source support instructional window for the first transaction abend selected during the current session for which source support is not enabled. The window explains how to access the Compuware Shared Services (CSS) Utilities in ISPF to create a source listing file and how to add it to the Abend-AID for CICS Source Directory for use with the selected transaction abend. The command overrides the value set in the corresponding user profile option for the current session only.

```
►►─SRCINST──┬─ON──┬──────►◄
            └─OFF─┘
```

ON

Displays the source support instructional window during the current session only.

OFF

Suppresses display of the source support instructional window during the current session only.

TOP

The TOP command scrolls to the top of a screen's scrollable area.

```
►►─TOP──────►◄
```

UNSTCK

The UNSTCK command interprets the store clock date and time at a user-specified address.

Note: On Memory Display data fields only (for example, Word1), the UNSTCK command interprets the *data* displayed in the field. To use this command, type **UNSTCK** in the Memory Display's COMMAND field, position the cursor on the first byte of either the address or the data to convert, and press Enter.

```
►►─UNSTck──address──────►◄
```

UP

The UP command scrolls the active screen display toward the top of a scrollable list of entries. Pressing the UP PF key also executes this command. (PF7 is the default.)

```
►►─UP──┬──────────────┬──►◄
       └─scrollamount─┘
```

scroll-amount

Specifies the number of rows the active screen display should be scrolled toward the top of a scrollable list of entries.

Example:

```
UP 12
```

This example scrolls the active screen display 12 rows toward the top of a scrollable list of entries.

WHERE

For region dumps only. The WHERE command displays the list of storage areas and control blocks in a CICS dynamic storage area (DSA) that contain the hexadecimal address, symbol name, or table entry specified.

You also can execute the WHERE command without specifying an address, symbol name, or table entry. Type **WHERE** in the COMMAND field; position the cursor on an address, control block, or table name field; and press Enter.

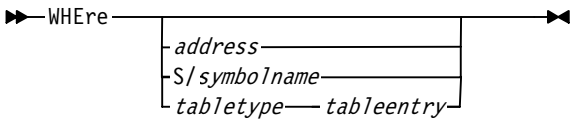

address

Hexadecimal address. You cannot use this parameter and the *tabletype* and *tableentry* parameters in the same WHERE command statement.

symbolname

Symbol name. A literal **S/** must precede the symbol name. You cannot use this parameter and the *tabletype* and *tableentry* parameters in the same WHERE command statement.

tabletype tableentry

Table entry. A space separates the table type from the table entry, for example, PCTE CEMT. PCTE is the table type, and CEMT is the entry in the table. You cannot use these parameters in a WHERE command that includes either the *address*, or the *symbolname* parameter.

Example 1:

```
WHERE 002DFBEC
```

Example 1 lists the storage areas and control blocks that contain hexadecimal address 002DFBEC.

Example 2:

```
WHERE S/TCA0005
```

Example 2 lists the storage areas and control blocks that contain symbol TCA0005.

Example 3:

```
WHERE PCTE CSTP
```

Example 3 lists the storage areas and control blocks that contain the CSTP table entry in the PCT entry DSECT format.

WHO

For region dumps only. The WHO command lists TCBs (for all dumps), TCAs (for CICS dumps only), and KETASKs (for CICS dumps only) that have addressability to the storage area specified by the command's parameter.

You also can execute the WHO command without specifying any parameters. Type **WHO** in the COMMAND field; position the cursor on an address, control block, or table name field; and press Enter. Pressing the WHO PF key also executes this command. (PF21 is the default.)

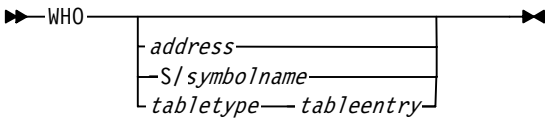

address

Hexadecimal address. You cannot use this parameter and the *tabletype* and *tableentry* parameters in the same WHO command statement.

symbolname

Symbol name. A literal **S/** must precede the symbol name. You cannot use this parameter and the *tabletype* and *tableentry* parameters in the same WHO command statement.

tabletype tableentry

Displays addressability information for the table entry specified. A space separates the table type from the table entry, for example, PCTE CEMT. PCTE is the table type, and CEMT is the entry in the table. You cannot use these parameters in a WHO command that includes either the *address*, or the *symbolname* parameter.

Example 1:

```
WHO 002DFBEC
```

Example 1 displays items that have addressability to hexadecimal address 002DFBEC.

Example 2:

```
WHO S/KETA001
```

Example 2 displays items that have addressability to the storage area identified by symbol KETA001.

Example 3:

```
WHO PCTE CSTP
```

Example 3 displays items that have addressability to the storage area for the CSTP PCT entry.

Part 6.
REXX API

Part 6 describes the Abend-AID for CICS REXX application program interface (API). It consists of the following chapters:

Chapter 19, "Using the Abend-AID for CICS REXX API"

Chapter 19 describes the Abend-AID for CICS REXX API, which lets you process REXX EXECs against transaction and region dumps. It includes a sample program.

Chapter 20, "REXX API Functions and Commands"

Chapter 20 lists the Abend-AID for CICS REXX API functions and commands in alphabetical order and includes a description, example, and syntax diagram for each.

Chapter 19.
Using the Abend-AID for CICS REXX API

This chapter describes the Abend-AID for CICS REXX application program interface (API), which lets you process REXX EXECs against both region and transaction dumps. By default, you can load EXECs from the SYSEXEC DD specified in the Abend-AID for CICS viewing server JCL.

Using the Abend-AID for CICS REXX API requires a basic understanding of standard IBM REXX processing and functionality. Refer to the IBM documentation for more information about REXX.

Invoking the Abend-AID for CICS REXX API

Once you have selected a transaction or region dump, you can invoke the Abend-AID for CICS REXX API by entering the REXX primary command from the command line on any screen. Entering the REXX primary command followed by the required name of the EXEC loads the REXX EXEC from the datasets allocated to the SYSEXEC DD statement. A valid EXEC name is a one- to eight-character member name. For example, entering **REXX MYEXEC** processes the EXEC named MYEXEC.

Optionally, you can enter other parameters in addition to the EXEC name to pass data to the EXEC. For example, entering **REXX CHECK CSA** processes the EXEC named CHECK, which uses the string 'CSA' as input.

Note: You need security authorization to use the Abend-AID for CICS REXX API. Contact your site's Abend-AID for CICS system administrator if you cannot invoke the Abend-AID for CICS REXX API.

Coding Abend-AID for CICS REXX API Programs

The Abend-AID for CICS REXX API lets you process REXX EXECs against both region and transaction dumps. In addition to the standard REXX functions and commands, the Abend-AID for CICS REXX API provides functions and commands that perform specific processing against Abend-AID for CICS dumps. Refer to Chapter 20, "REXX API Functions and Commands" for a description of each function and command, its valid syntax, and examples.

Toleration Mode

Standard IBM REXX functions or commands terminate processing of the EXEC if the function or command does not complete successfully. By default, Abend-AID for CICS REXX API functions and commands do not stop processing of the EXEC if the function or command does not complete successfully. For example, using the FXGET function to request storage retrieval may result in partial storage returned. This error condition does not stop processing of the EXEC. You can change the default setting of the FXMODE function from TOLERATION to FAIL to cause the Abend-AID for CICS REXX API functions and commands to stop processing the EXEC when they do not complete successfully.

Sample Abend-AID for CICS REXX API Program SAMPREXX

Abend-AID for CICS dataset COMPWARE.KFX510.SKFXREXX member SAMPREXX, shown in Figure 19-1, is an Abend-AID for CICS REXX API sample program. This program can be processed against any selectable CICS region dump with a status of COMPLETE on the Abend-AID Directory. This EXEC displays file control information about the region dump such as FCT address, name, type, and dataset name.

Figure 19-1. Sample Abend-AID for CICS REXX API Program, Part 1

```
/*REXX-----------------------------------------------------------REXX*/
/*   Procedure: SAMPREXX                                            */
/*    Function: Display some file control information, including    */
/*              FCT address,                                         */
/*              FCT name,                                            */
/*              FCT type (VSAM or BDAM) and                          */
/*              DSNB data set name.                                  */
/*     Resides: Abend-AID for CICS SKFXSAMP library                  */
/*                                                                   */
/*         Abend-AID for CICS                                        */
/*         Copyright (C) 1994, 2002, Compuware Corporation           */
/*         Unpublished - rights reserved under the                   */
/*         copyright laws of the U.S.                                */
/*                                                                   */
/*REXX-----------------------------------------------------------REXX*/
/*                                                                   */
/* verify the dump type and it is CICS                               */
/*                                                                   */
IF FXINFO('DUMPTYPE') ¬= 'REGION DUMP'
   THEN DO
        SAY 'Selected dump is not a region dump'
        EXIT
   END
```

Figure 19-2. Sample Abend-AID for CICS REXX API Program, Part 2

```
IF SUBSTR(FXINFO('RELEASE'),1,4) ¬= 'CICS'
   THEN DO
        SAY 'Selected dump is not a CICS dump'
        EXIT
   END
/*                                                                  */
/* clear the current paper clip table                               */
/*                                                                  */
"FXPCLEAR"
/*                                                                  */
/* get the address of the static storage list                       */
/*                                                                  */
SSA@ = FXGET(FXADD(FXSYMBOL('CSAOPFL'),FXDSOFF('CSASSA','CSAOPFL')),4)
/*                                                                  */
/* get the address of the table manager static storage              */
/*                                                                  */
TMS@ = FXGET(FXADD(SSA@,FXDSOFF('SSATMP','SSA')),4)
/*                                                                  */
/* get the address of the FCT scatter table address                 */
/*                                                                  */
FCTST@ = FXGET(FXADD(TMS@,FXDSOFF('TMASKT5','TMSTAT')),4)
/*                                                                  */
/* get the address of the first directory element                   */
/*                                                                  */
ELEM@ = FXGET(FXADD(FCTST@,FXDSOFF('SKTFDEA','SKT')),4)
/*------------------------------------------------------------------*/
/*                                                                  */
/* get some offsets before entering the element loop                */
/*                                                                  */
/*------------------------------------------------------------------*/
/*                                                                  */
/* get the offset to the next directory element                     */
/*                                                                  */
NEXTOFST = FXDSOFF('DIRGNCHN','ELEM')
/*                                                                  */
/* get the offset to the FCT entry                                  */
/*                                                                  */
FCTOFST = FXDSOFF('DIRTEA','ELEM')
/*                                                                  */
/* get the offset to the FCT entry name                             */
/*                                                                  */
NAMEOFST = FXDSOFF('FCTDSID','FCTE')
/*                                                                  */
/* get the offset to the DS name block                              */
/*                                                                  */
DSNBOFST = FXDSOFF('FCTDSDP','FCTE')
/*                                                                  */
```

Figure 19-3. Sample Abend-AID for CICS REXX API Program, Part 3

```
/* get the offset to the VSAM/BDAM option                          */
/*                                                                 */
VSAMOFST = FXDSOFF('FCTDSVR3','FCTE')
/*                                                                 */
/* get the bit mask for the VSAM/BDAM option                       */
/*                                                                 */
VSAMMASK = FXDSMSK('FCTVSAMI','FCTE')
/*                                                                 */
/* get the offset to the length of the data set name               */
/*                                                                 */
LENGOFST = FXDSOFF('FCTDNLEN','DSNDS')
/*                                                                 */
/* get the offset to the data set name                             */
/*                                                                 */
FILEOFST = FXDSOFF('FCTDNAME','DSNDS')
SAY ' '
SAY 'FCT@     NAME     TYPE DSN'
SAY '-----------------------------------------------------------------'
DO WHILE ELEM@ ¬= 0
/*                                                                 */
/* get the address of the FCT entry                                */
/*                                                                 */
   FCT@ = FXGET(FXADD(ELEM@,FCTOFST),4)
/*                                                                 */
/* get the character FCT name                                      */
/*                                                                 */
   FCTCHAR = FXGETC(FXADD(FCT@,NAMEOFST),8)
/*                                                                 */
/* determine the FCT type                                          */
/*                                                                 */
   IF FXTM(FXADD(FCT@,VSAMOFST),VSAMMASK) = 'ONES'
      THEN TYPE = 'VSAM'
      ELSE TYPE = 'BDAM'
/*                                                                 */
/* set default data set name                                       */
/*                                                                 */
   DSNCHAR = 'UNKNOWN'
/*                                                                 */
/* get the address of the DS name block                            */
/*                                                                 */
   DSN@ = FXGET(FXADD(FCT@,DSNBOFST),4)
   IF DSN@ ¬= '00000000'
      THEN DO
/*                                                                 */
/* get the length of the data set name                             */
/*                                                                 */
           LEN# = FXGET(FXADD(DSN@,LENGOFST),1)
```

Figure 19-4. Sample Abend-AID for CICS REXX API Program, Part 4

```
/*                                                                 */
/* get the character data set name                                 */
/*                                                                 */
           DSNCHAR = FXGETC(FXADD(DSN@,FILEOFST),LEN#)
      END
/*                                                                 */
/* and report the findings in the paperclip table                  */
/*                                                                 */
   COMMENT = FCTCHAR || TYPE || DSNCHAR
   "FXPCLIP("FCT@",'"COMMENT"')"
/*                                                                 */
/* get the address of the next directory element                   */
/*                                                                 */
   ELEM@ = FXGET(FXADD(ELEM@,NEXTOFST),4)
END
   "FXPSHOW"
SAY '-----------------------------------------------------------------'
EXIT 0
```

After selecting a region dump, entering **REXX SAMPREXX** on the command line of any Abend-AID for CICS screen displays results similar to those shown in Figure 19-5.

Figure 19-5. SAMPREXX Sample Program Results

```
 Abend-AID for CICS ----------- REXX Interface ----------- Row 000001 of 000014
COMMAND ===>                                                SCROLL ===> PAGE
                                                                         ==>
REXX messages
********************************************************************************
SAMPREXX

FCT@     NAME     TYPE DSN
-----------------------------------------------------------------
003657D4 CCABDUMP VSAM CWV.CWX0264.CCABDUMP
00365708 DFHCSD   VSAM CWV.CWX0264.DFHCSD
003658A0 PLAAUTH  VSAM CWV.CWX0264.PLAAUTH
00365BD0 PLACGBL  VSAM CWV.CWX0264.PLACGBL
00365A38 PLAYDT1  VSAM CWV.CWX0264.PLAYDT1
00365B04 PLAYDT2  VSAM CWV.CWX0264.PLAYDT2
0036596C PLAYHLP  VSAM CWV.CP.R444.HELP
00365C9C SLSF001  VSAM CWV.CWX0264.LISTING
-----------------------------------------------------------------
END REXX
****************************** BOTTOM OF DATA ********************************
```

Chapter 20.
REXX API Functions and Commands

The Abend-AID for CICS REXX application program interface (API) supports specific Abend-AID for CICS functions and commands that you can use in your REXX EXECs against transaction and region dumps. These are in addition to the standard IBM REXX functions and commands.

The remaining sections of this chapter list the Abend-AID for CICS REXX API functions and commands in alphabetical order and include a description, example, and syntax diagram for each. Refer to "Reading Command Syntax" on page 18-2 for an explanation of the rules governing syntax diagrams.

Abend-AID for CICS REXX API Special Variables

The reserved variables, FXRC and FXMSG, are updated after each Abend-AID for CICS REXX function or command. A third variable, FXLENGTH, may be updated if the function or command returns data that implies a length of the data. A fourth variable that is valid only for the FXTABENT function, FXENTKEY, may be updated if the function returns a table entry name.

- **FXRC:** A numeric value indicating the function or command return code. The return codes vary for each function or command. A value of **0** (zero) indicates that the function or command was successful. A value of **2** indicates either partial completion or failure.
- **FXMSG:** A text message string that further explains the FXRC. If FXRC is equal to **0** (zero), then the FXMSG is set to **OK**.
- **FXLENGTH:** A hexadecimal value that indicates the length of the data returned. For example, a request to return 100 bytes of storage at an unallocated address results in FXLENGTH being set to **0** (zero).
- **FXENTKEY:** The name of the table entry returned by the FXTABENT function.

Abend-AID for CICS REXX API Functions

Functions return a value that can be assigned to a REXX variable. For example, the following function assigns the address of the AP anchor block (CSA) to the REXX variable A:

```
A=FXSYMBOL('APANCH')
```

Following are the Abend-AID for CICS REXX API functions.

FXADD

The FXADD function returns the result of adding the two specified hexadecimal values.

```
►►─FXADD(─value1,value2─)──►◄
```

Example:

```
FXADD('FE','22')
```

This example adds the two hexadecimal values, and gives the sum, hexadecimal value 120.

The return codes and message text associated with the FXADD function are:

0 OK

2 One of the following message text displays:

ZERO — Sum is zero

NEGATIVE

OVERFLOW — Exceeds 31-bit result

MISSING OPERAND(S)

INVALID HEXADECIMAL OPERAND

OPERAND EXCEEDS MAXIMUM LENGTH

EXTRANEOUS OPERAND(S)

FXDATE

The FXDATE function returns a literal representing the store clock date for the eight bytes at the specified address in the dump.

```
►►─FXDATE(─address─)──────►◄
```

Example:

```
FXDATE('001410E0E')
```

This example returns the store clock date for the specified hexadecimal address 001410E0E. The result is converted the Abend-AID for CICS standard date format DDMMMYYYY, where DD represents the day, MMM the month, and YYYY represents the year; for example, 07DEC2010.

The return codes and message text associated with the FXDATE function are:

0 OK

2 One of the following message text displays:

UNAVAILABLE STORAGE ADDRESS

REQUIRED EIGHT BYTES UNAVAILABLE

MISSING OPERAND(S)

OPERAND EXCEEDS MAXIMUM LENGTH

INVALID HEXADECIMAL OPERAND

EXTRANEOUS OPERAND(S)

FXDIV

The FXDIV function returns the result of dividing the two specified hexadecimal values.

```
►─FXDIV(─value1,value2─)──────►◄
```

Example 1:

```
FXDIV('A2','12')
```

Example 1 divides the two hexadecimal values. The first value is divided by the second value. The result is hexadecimal value 9.

Example 2:

```
FXDIV('A2','0')
```

Example 2 divides the two hexadecimal values. The first value is divided by zero. The result is a null character string. The return code is 2 and the associated message text is DIVISION BY ZERO.

The return codes and message text associated with the FXDIV function are:

0 OK

2 One of the following message text displays:

DIVISION BY ZERO

MISSING OPERAND(S)

INVALID HEXADECIMAL OPERAND

OPERAND EXCEEDS MAXIMUM LENGTH

EXTRANEOUS OPERAND(S)

FXDSDUP

The FXDSDUP function returns the duplication factor of the requested label within the DSECT. The default DSECT type is SYSTEM.

```
►►─FXDSDUP(─label,dsect─,┌─'SYSTEM'─┐─)──────►◄
                          └─'USER'───┘
```

Example:

```
FXDSDUP('CSAOSRSA','CSA')
```

This example returns the duplication factor of the label CSAOSRSA within the system DSECT CSA. The result is hexadecimal value 12.

The return codes and message text associated with the FXDSDUP function are:

0 OK

2 One of the following message text displays:

DSECT FILE IS UNAVAILABLE

UNKNOWN SYSTEM DSECT

UNABLE TO OPEN DSECT MEMBER

INVALID DSECT TYPE

MISSING OPERAND(S)

OPERAND EXCEEDS MAXIMUM LENGTH

EXTRANEOUS OPERAND(S)

FXDSLEN

The FXDSLEN function returns the hexadecimal length of the requested label within the DSECT. The default DSECT type is SYSTEM.

```
►►─FXDSLEN(-label,dsect-,┌─'SYSTEM'─┐─)──────►◄
                          └─'USER'───┘
```

Example:

```
FXDSLEN('TCBJSTCB','TCB51','USER')
```

This example returns the hexadecimal length of the label TCBJSTCB for the user-defined DSECT TCB51. The result is 4.

The return codes and message text associated with the FXDSLEN function are:

0 OK

2 One of the following message text displays:

DSECT FILE IS UNAVAILABLE

UNKNOWN SYSTEM DSECT

UNABLE TO OPEN DSECT MEMBER

INVALID DSECT TYPE

MISSING OPERAND(S)

OPERAND EXCEEDS MAXIMUM LENGTH

EXTRANEOUS OPERAND(S)

FXDSMSK

The FXDSMSK function returns the eight-character bit mask of the requested label within the DSECT. The default DSECT type is SYSTEM.

```
►►─FXDSMSK(─label,dsect─,─┬─'SYSTEM'─┬─)──────►◄
                          └─'USER'───┘
```

Example 1:

```
FXDSMSK('CSASOSON','CSA')
```

Example 1 returns the eight-character bit mask of the label CSASOSON within the system DSECT CSA. The result is 00000001.

Example 2:

```
FXDSMSK('CSAPLTPI','CSA')
```

Example 2 returns the eight-character bit mask of the label CSAPLTPI within the system DSECT CSA. The result is 00010000.

The return codes and message text associated with the FXDSMSK function are:

0 OK

2 One of the following message text displays:

DSECT FILE IS UNAVAILABLE

UNKNOWN SYSTEM DSECT

UNABLE TO OPEN DSECT MEMBER

INVALID DSECT TYPE

MISSING OPERAND(S)

OPERAND EXCEEDS MAXIMUM LENGTH

EXTRANEOUS OPERAND(S)

FXDSOFF

The FXDSOFF function returns the hexadecimal offset of the requested label within the DSECT. The default DSECT type is SYSTEM.

```
►►─FXDSOFF(─label,dsect─,─┬─'SYSTEM'─┬─)──────►◄
                          └─'USER'───┘
```

Example:

```
FXDSOFF('CSACDTA','CSA')
```

This example returns the hexadecimal offset of the label CSACDTA within the system DSECT CSA. The result is 0000004C.

The return codes and message text associated with the FXDSOFF function are:

0 OK

2 One of the following message text displays:

DSECT FILE IS UNAVAILABLE

UNKNOWN SYSTEM DSECT

UNABLE TO OPEN DSECT MEMBER

INVALID DSECT TYPE

MISSING OPERAND(S)

OPERAND EXCEEDS MAXIMUM LENGTH

EXTRANEOUS OPERAND(S)

FXDSSCL

The FXDSSCL function returns the scaling modifier of the requested label within the DSECT. The default DSECT type is SYSTEM.

```
►►─FXDSSCL(─label,dsect─,┌─────────┐─)──────►◄
                         │'SYSTEM' │
                         │         │
                         └─'USER'──┘
```

Example:

```
FXDSSCL('CSAKCMT','CSA')
```

This example returns the scaling modifier of the label CSAKCMT within the system DSECT CSA. The result is 2.

The return codes and message text associated with the FXDSSCL function are:

0 OK

2 One of the following message text displays:

DSECT FILE IS UNAVAILABLE

UNKNOWN SYSTEM DSECT

UNABLE TO OPEN DSECT MEMBER

INVALID DSECT TYPE

MISSING OPERAND(S)

OPERAND EXCEEDS MAXIMUM LENGTH

EXTRANEOUS OPERAND(S)

FXDSTYP

The FXDSTYP function returns the assembler field type of the requested label within the DSECT. The default DSECT type is SYSTEM.

```
►►─FXDSTYP(label,dsect-,┌─'SYSTEM'─┐)──────►◄
                        └─'USER'───┘
```

Valid assembler field types are:

A	A-type address constant, implied length, aligned
B	Binary constant
C	Character constant
D	Long floating-point constant, implicit length, aligned
E	Short floating-point constant, implicit length, aligned
F	Fullword fixed-point constant, implicit length, aligned
G	Fixed-point constant, explicit length
H	Halfword fixed-point constant, implicit length, aligned
K	Floating-point constant, explicit length
L	Extended floating-point constant, implicit length, aligned
P	Packed decimal constant
Q	Q-type address constant, implicit length, aligned
R	A-, S-, Q-, V-, or Y-type address constant, explicit length
S	S-type address constant, implicit length, aligned
V	V-type address constant, implicit length, aligned
X	Hexadecimal constant
Y	Y-type address constant, implicit length, aligned
Z	Zoned decimal constant
@	Graphic (G) constant
I	Machine instruction
J	Identified as a control section name
M	Name field on a macro instruction
T	Identified as an external symbol by EXTRN instruction
W	CCW, CCW0, or CCW1 instruction
$	Identified as an external symbol by WXTRN instruction

N Self-defining term or the value of a SETA or SETB variable

O Omitted operand (has a value of a null character string)

U Undefined

Example 1:

```
FXDSTYP('CSACDTA,'CSA')
```

Example 1 returns the assembler field type of the label CSACDTA for the system DSECT CSA. The result is A.

Example 2:

```
FXDSTYP('DFHCSADS,'CSA')
```

Example 2 returns the assembler field type of the label DFHCSADS for the system DSECT CSA. The result is J.

The return codes and message text associated with the FXDSTYP function are:

0 OK

2 One of the following message text displays:

DSECT FILE IS UNAVAILABLE

UNKNOWN SYSTEM DSECT

UNABLE TO OPEN DSECT MEMBER

INVALID DSECT TYPE

MISSING OPERAND(S)

OPERAND EXCEEDS MAXIMUM LENGTH

EXTRANEOUS OPERAND(S)

FXGET

The FXGET function returns the storage at the requested address, based on length. Length is a hexadecimal number of bytes. If you don't specify length, the maximum length, 4096, is returned. The storage is returned in hexadecimal format. For example, data is returned as 'C1C2C3C4', not 'ABCD'. Refer to "FXGETC" on page 20-9 if you want the storage returned in character format.

```
►►─FXGET(─address─,─┬─'4096'─┬─)──────►◄
                    └─length─┘
```

Example:

```
FXGET('001830ED','325')
```

This example returns in hexadecimal format the first 325 hexadecimal bytes of storage at address 001830ED.

The return codes and message text associated with the FXGET function are:

0 OK

2 One of the following message text displays:

UNAVAILABLE STORAGE ADDRESS

PARTIAL STORAGE RETURNED

MISSING OPERAND(S)

INVALID HEXADECIMAL OPERAND

OPERAND EXCEEDS MAXIMUM LENGTH

EXTRANEOUS OPERAND(S)

FXGETC

The FXGETC function returns the storage at the requested address, based on length. Length is a hexadecimal number of bytes. If you don't specify length, the maximum length, 4096, is returned. The storage is returned in character format. For example, data is returned as 'ABCD', not 'C1C2C3C4'. Refer to "FXGET" on page 20-8 if you want the storage returned in hexadecimal format.

```
►►─FXGETC(─address,─┬─────────┬─)──────────►◄
                    │ '4096'  │
                    └─length──┘
```

Example:

```
FXGETC('00057085','520')
```

This example returns in character format the first 520 hexadecimal bytes of storage at address 00057085.

The return codes and message text associated with the FXGETC function are:

0 OK

2 One of the following message text displays:

UNAVAILABLE STORAGE ADDRESS

PARTIAL STORAGE RETURNED

MISSING OPERAND(S)

INVALID HEXADECIMAL OPERAND

OPERAND EXCEEDS MAXIMUM LENGTH

EXTRANEOUS OPERAND(S)

FXINFO

The FXINFO function returns a character string that represents the following values:

ENTRY	Dump number; for example, 44,446
ABEND	Abend code; for example, ASRA
DUMPDATE	Dump date; for example, 6SEP1998
DUMPTIME	Dump time; for example, 10:11:40.933
JOBNAME	Job name; for example, H01AC049
RELEASE	CICS release; for example, CICS410_TRAN
DUMPTYPE	Dump type (transaction or region); for example, TRANSACTION DUMP
COMMENT	Directory comments; for example, SYMPTOM STRING IS AVAILABLE
ROWS	Terminal height of viewing terminal; for example, 24
COLUMNS	Terminal width of viewing terminal; for example, 80

For Transaction Dumps Only:

TRAN	Abending transaction; for example, AAON
PROGRAM	Abending program; for example, CTCCPSTR
OFFSET	Abending instruction offset; for example, 00000234
DUPCOUNT	Number of duplicates; for example, 2
TERMINAL	Terminal ID; for example, D492
USERID	User ID; for example, CICSUSER

```
►►─FXINFO(-value-)──────►◄
```

Example:

```
FXINFO('RELEASE')
```

This example returns the CICS release of the selected dump, CICS630_TRAN.

The return codes and message text associated with the FXINFO function are:

0 OK

2 One of the following message text displays:

NOT VALID FOR REGION DUMP

MISSING OPERAND

INVALID OPERAND

EXTRANEOUS OPERAND(S)

FXJDATE

The FXJDATE function returns a literal representing the Julian date for the four bytes at the specified address in the dump. The Julian date is in the format, CCYYDDDF, where CC represents the century, YY represents the year, DDD represents the day of the year (1 through 366), and F is a packed data indicator.

```
►►─FXJDATE(─address─)──────►◄
```

Example:

```
FXJDATE('077DFD84')
```

This example returns the four-byte literal Julian date at address 077DFD84. The result is converted to the Abend-AID for CICS standard date format DDMMMYYYY, where DD represents the day, MMM the month, and YYYY represents the year; for example, 01MAR20001.

The return codes and message text associated with the FXJDATE function are:

0 OK

2 One of the following message text displays:

INVALID JULIAN DATE

UNAVAILABLE STORAGE ADDRESS

REQUIRED FOUR BYTES UNAVAILABLE

MISSING OPERAND

OPERAND EXCEEDS MAXIMUM LENGTH

INVALID HEXADECIMAL OPERAND

EXTRANEOUS OPERAND(S)

FXMODE

The FXMODE function specifies whether the Abend-AID for CICS REXX API functions and commands that are in error cause the EXEC to stop. Non-zero return codes are returned in the FXRC variable. If FXMODE is set to FAIL, the message is highlighted and written to your screen. The default is TOLERATION mode, which allows processing to continue.

```
                 ┌'TOLERATION'┐
►►─FXMODE(─────┤              ├─)─►◄
                 └'FAIL'──────┘
```

Example:

```
FXMODE('FAIL')
```

This example specifies that if any Abend-AID for CICS REXX API functions or commands are in error, the EXEC stops processing.

The return codes and message text associated with the FXMODE function are:

0 OK

2 The following message text displays:

INVALID OPERAND

FXMULT

The FXMULT function returns the result of multiplying the two specified hexadecimal values.

```
►►─FXMULT(─*value1*,*value2*─)─►◄
```

Example:

```
FXMULT('B4','18')
```

This example returns the hexadecimal value 10E0, the result of multiplying hexadecimal value B4 by hexadecimal value 18.

The return codes and message text associated with the FXMULT function are:

0 OK

2 One of the following message text displays:

MISSING OPERAND(S)

INVALID HEXADECIMAL OPERAND

OPERAND EXCEEDS MAXIMUM LENGTH

EXTRANEOUS OPERAND(S)

FXREM

The FXREM function returns the remainder of dividing the two specified hexadecimal values.

```
►►─FXREM(─value1,value2─)──────►◄
```

Example:

```
FXREM('D1','27')
```

This example returns the remainder, hexadecimal value E, as a result of dividing hexadecimal value D1 by hexadecimal value 27.

The return codes and message text associated with the FXREM function are:

0 OK

2 One of the following message text displays:

DIVISION BY ZERO

MISSING OPERAND(S)

INVALID HEXADECIMAL OPERAND

OPERAND EXCEEDS MAXIMUM LENGTH

EXTRANEOUS OPERAND(S)

FXSTIME

The FXSTIME function returns a literal representing the store clock time for the eight bytes at the specified address in the dump.

```
►►─FXSTIME(─address,length─)──►◄
```

Example:

```
FXSTIME('0014111B')
```

This example returns the store clock time for the specified hexadecimal address 0014111B. The result is converted to military time format HH:MM:SS.THT, where HH represents the hour, MM represents minutes, SS represents seconds, and THT represents tenths, hundredths, and thousandths of a second; for example, 14:59:10.021.

The return codes and message text associated with the FXSTIME function are:

0 OK

2 One of the following message text displays:

UNAVAILABLE STORAGE ADDRESS

REQUIRED EIGHT BYTES UNAVAILABLE

MISSING OPERAND(S)

OPERAND EXCEEDS MAXIMUM LENGTH

INVALID HEXADECIMAL OPERAND

EXTRANEOUS OPERAND(S)

FXSUB

The FXSUB function returns the result of subtracting the two specified hexadecimal values.

```
►►─FXSUB(─value1,value2─)──────►◄
```

Example:

```
FXSUB('1D8','29')
```

This example returns hexadecimal value 1AF, the result of subtracting hexadecimal value 29 from hexadecimal value 1D8.

The return codes and message text associated with the FXSUB function are:

0 OK

2 One of the following message text displays:

ZERO

NEGATIVE

OVERFLOW

MISSING OPERAND(S)

INVALID HEXADECIMAL OPERAND

OPERAND EXCEEDS MAXIMUM LENGTH

EXTRANEOUS OPERAND(S)

FXSYMBOL

The FXSYMBOL function returns the storage address of the requested symbol. The maximum length of a symbol name is 36 characters. Refer to Appendix B, “Symbols List” for the valid symbol names defined for use with Abend-AID for CICS.

```
►►─FXSYMBOL(─symbol─)──►◄
```

Example:

```
FXSYMBOL('KEANCH')
```

This example returns the address of the kernel domain anchor KEANCH for the selected dump.

The return codes and message text associated with the FXSYMBOL function are:

0 OK

2 One of the following message text displays:

SYMBOL NAME EXCEEDS MAXIMUM LENGTH

SYMBOL UNKNOWN

MISSING OPERAND

EXTRANEOUS OPERAND(S)

FXTABENT

The FXTABENT function returns the storage address of the requested CICS table entry. By default, if no entry is specified, the first entry is returned. Valid tables are:

DCT destination control table

FCT file control table

PCT program control table

PPT program processing table

TCT terminal control table terminal entries

TCTN terminal control table skeleton entries

TCTS terminal control table system entries

```
                   ┌─first─┐
►►─FXTABENT(─table,─┼───────┼─)──►◄
                   │─entry─│
                   │─'+'───│
                   └─'-'───┘
```

Example 1:

```
FXTABENT(FCT)
```

Example 1 returns the address of the first file control table entry for the selected dump. The value of FXLENGTH is set to the length of the file control table entry. The value of FXENTKEY is set to the name of the file control table entry.

Example 2:

```
FXTABENT(FCT,'TESTVSAM')
```

Example 2 returns the address of the file control table entry TESTVSAM for the selected dump. The value of FXLENGTH is set to the length of the file control table entry. The value of FXENTKEY is set to the name of the file control table entry.

Example 3:

```
FXTABENT(FCT,'+')
```

Example 3 returns the address of the next file control table entry for the selected dump. The value of FXLENGTH is set to the length of the file control table entry. The value of FXENTKEY is set to the name of the file control table entry.

Example 4:

```
FXTABENT(FCT,'-')
```

Example 4 returns the address of the previous file control table entry for the selected dump. The value of FXLENGTH is set to the length of the file control table entry. The value of FXENTKEY is set to the name of the file control table entry.

The return codes and message text associated with the FXTABENT function are:

0 OK

2 One of the following message text displays:

MISSING OPERAND

EXTRANEOUS OPERAND(S)

TABLE NAME EXCEEDS MAXIMUM LENGTH

ENTRY NAME EXCEEDS MAXIMUM LENGTH

INVALID TABLE TYPE

NO TABLE ENTRIES FOUND

END OF TABLE

TOP OF TABLE

FXTM

The FXTM function returns a literal indicating whether the storage at the specified address has all, none, or some of the mask bits on. The mask is a string of eight binary digits.

```
►►─FXTM(-address,mask-)──►◄
```

Example:

```
FXTM('0C2FF0A8','00000001')
```

This example indicates whether the mask 00000001 is on at address 0C2FF0A8.

The return codes and message text associated with the FXTM function are:

0 OK

2 One of the following message text displays:

ZEROS — All bits checked are zeros.

MIXED — All bits checked are zeros and ones.

ONES — All bits checked are ones.

UNAVAILABLE STORAGE ADDRESS

MISSING OPERAND(S)

INVALID HEXADECIMAL OPERAND

OPERAND EXCEEDS MAXIMUM LENGTH

EXTRANEOUS OPERAND(S)

FXTRACE

The FXTRACE function enables or disables SAY command output to SYSTSPRT. By default SAY command output is directed to your screen.

```
                 ┌'OFF'┐
►►─FXTRACE(─────┤     ├─)──►◄
                 └'ON'─┘
```

Example:

```
FXTRACE('ON')
```

This example enables SAY command output to SYSTSPRT.

The return codes and message text associated with the FXTRACE function are:

0 OK

2 The following message text displays:

INVALID OPERAND

Abend-AID for CICS REXX API Commands

Abend-AID for CICS is the only host command environment available for processing commands for the Abend-AID for CICS REXX API. Commands do not return a value to be assigned to a REXX variable. Commands are used to perform an action. They must be enclosed in double quotes.

Following are the Abend-AID for CICS REXX API commands.

FXHEXD

The FXHEXD command displays dump storage in hexadecimal format, starting at the specified address. The length parameter controls the amount of storage displayed in hexadecimal bytes. This command always results in the data being sent to your screen. It cannot result in data being directed to SYSTSPRT.

```
►►─FXHEXD(-address,length-)──►◄
```

Example:

```
"FXHEXD('6000','FF0')"
```

This example displays in hexadecimal format the storage at address 6000 for FF0 bytes on your screen.

FXPCLEAR

The FXPCLEAR command clears the current paperclip table.

```
►►─FXPCLEAR──────►◄
```

Example:

```
"FXPCLEAR"
```

This example clears the current paperclip table.

FXPCLIP

The FXPCLIP command adds an entry to the current paperclip table, with an optional comment. The entry consists of the data at the hexadecimal address and can also include an optional text string.

```
►►─FXPCLIP(-address,┬──────────┬)──►◄
                    └─comment──┘
```

Example:

```
"FXPCLIP('0AEAC270','customer name')"
```

This example adds the data at address 0AEAC270 as an entry to the current paperclip table with the comment, customer name.

FXPSHOW

The FXPSHOW command formats the current paperclip table. This command always results in the data being sent to your screen. It cannot result in the data being directed to SYSTSPRT.

```
►►─FXPSHOW──────────►◄
```

Example:

```
"FXPSHOW"
```

This example formats the current paperclip table and displays it on your screen.

Part 7. Appendixes

Part 7 consists of three appendixes:

Appendix A, "Supplied Transaction"

Appendix A describes the CICS transaction included in Abend-AID for CICS that controls the transaction and region dump interfaces.

Appendix B, "Symbols List"

Appendix B lists the MVS- and CICS-related symbols that Abend-AID for CICS uses for CICS Transaction Server for z/OS and OS/390 region dumps.

Appendix C, "Internal Transaction Abends"

Appendix D describes the Abend-AID for CICS internal transaction abends that may occur during Abend-AID for CICS transaction abend processing.

Appendix A. Supplied Transaction

This appendix describes how to *manually* control transaction and region dump interfaces using the CICS AAON transaction supplied with Abend-AID for CICS. For information about how to *automatically* control CICS dump interfaces, refer to the *Abend-AID for CICS Installation and Customization Guide*.

Note: Before you can use the supplied transaction, you must have already defined to CICS the dump interface control program for the version of CICS you are using. This procedure is normally completed during installation. For specifics, refer to the *Abend-AID for CICS Installation and Customization Guide*.

Controlling the Dump Interface Manually

To control the dump interface manually:

1. Display the AAON Transaction Options Menu, as shown in Figure A-1, by typing **AAON** and pressing Enter from a cleared CICS screen.

Figure A-1. AAON Transaction Options Menu

```
Abend-AID for CICS ------- AAON Transaction Options Menu ----------------------
Option ===>

Tab-select an AAON option, or type the name of the option in the OPTION
field.  Press PF3 to return to CICS.

   ON     Start transaction dump interface
   ONR    Start region dump interface
   ONRT   Start transaction and region dump interfaces
   OFF    Stop transaction dump interface
   OFFX   Cancel transaction dump interface
   OFFR   Stop region dump interface
   OFFRT  Stop transaction and region dump interfaces
   EXCP   Display temporary transaction dump capture profile
   DB2ON  Enable DB2 option
   DB2OFF Disable DB2 option


Status:

   CICS Applid................... H01AC011       Version.......... 05.01.00
   Transaction Dump Interface... STARTED        Viewing Server... CIMSCF01
   Region Dump Interface........ STOPPED        Dump Capture AS.. FXTDCAS
```

The AAON Transaction Options Menu displays AAON options that start, stop, or cancel a transaction or region dump interface (or a combination of the two interfaces). You may also display the temporary transaction dump capture option table from this screen. The current status of each dump interface is displayed below the list of AAON options.

2. Select an AAON option using one of two methods:
   - Tab to the option you want to select and press Enter.

– Type the name of the option in the OPTION field and press Enter. If you accidentally enter an invalid option, the system redisplays the AAON Transaction Options Menu.

Once you make a selection, the status of the appropriate dump interface changes accordingly.

3. Press Enter to return to the AAON Transaction Options Menu, or press Clear Screen to return to CICS.

You may also control the transaction and region dump interfaces directly from CICS using a combination of the AAON transaction ID and an AAON option. For example:

```
AAON ON
AAON OFFR
```

Press Enter to process the command from CICS.

Transaction Dump Interface

The transaction dump interface must be started for Abend-AID for CICS to process any transaction dumps, or if you want to view dumps from CICS (with the AADF transaction). To start the transaction dump interface, select AAON ON, AAON ONRT, or AAON DB2ON. Also note the following conditions that affect starting the transaction dump interface:

- The transaction dump capture subsystem must be active before you start the transaction dump interface.
- If your site is licensed for the Abend-AID for CICS DB2 extra-cost option and if Abend-AID for CICS is installed in a CICS region where DB2 itself is *not* running, the transaction dump interface still turns on, even if the table updates for the DB2 option have not been completed. Messages are written to the CSMT log and/or the terminal indicating that DB2 is licensed, but is not active in the CICS region.
- If your site is licensed for the Abend-AID for CICS DB2 extra-cost option, and if DB2 itself *is* running in a region and the DB2 option table updates are not completed, the transaction dump interface will *not* start in that region, regardless of which AAON option you select.

An additional AAON option is available, but not displayed on the AAON Transaction Options Menu. The AAON T0C7 option creates a transaction ASRA abend (S0C7), which displays as an entry on the Abend-AID Directory. The AAON T0C7 option can be issued from CICS with the AAON transaction ID, or from the OPTION field of the AAON Transaction Options Menu.

Region Dump Interface

The region dump interface is *not* required to capture CICS region dumps. It is required only if you want to capture a list of recently changed programs from the CICS RPL concatenation. If this list is captured, you can view it through the Abend-AID for CICS region dump display screens. Entering the **CHANGES** fast-path command displays the Program Change Summary screen.

If you want to use the optional region dump interface, use the Abend-AID for CICS AAON ONR or AAON ONRT CICS transaction. For PLT processing, the program name associated with the region dump interface is CTCCJRGN. Note that you may experience some overhead and increased dump capture time when you enable the region dump interface. Usually this amount is insignificant, but if you see any performance degradation at dump capture time, you can turn off only the region dump interface, while still leaving the transaction dump interface active.

Modifying Temporary Transaction Dump Profiles

Transaction dump profiles and transaction global options control the actions that Abend-AID for CICS takes when transaction abends occur. Transaction dump global options specify actions that are taken for *all* transaction abends in the CICS region. Transaction dump profiles can override certain transaction dump global option specifications for individual abend codes, transactions, programs, terminals, network names, operator IDs, user IDs, APPLIDs, or local CICS SYSIDs, so that you have more control over exception conditions in your CICS regions.

There are two types of transaction dump profiles — permanent and temporary. Permanent transaction dump profiles are created and maintained through the online customization procedure, and they are loaded by the CICS regions to which they are assigned when Abend-AID for CICS is initiated in the CICS region. Permanent transaction dump profiles, and the online customization procedure, are discussed in the *Abend-AID for CICS Installation and Customization Guide*.

Temporary transaction dump profiles override any specifications made in permanent transaction dump profiles. They are created and maintained from CICS using a CICS transaction, and are only active for the life of the CICS region in which they are created, or until you stop Abend-AID for CICS.

Specifications made in transaction dump profiles (both temporary and permanent) control the following:

- Suppressing duplicate dumps.

  Note: A duplicate transaction dump is one that has the same abend code, abending program name, abending program offset, and transaction ID. You can include APPLID and job name as criteria for identifying duplicate dumps if your site sets their corresponding global options to Y.

- Capturing an IBM dump in addition to, or instead of, an Abend-AID for CICS dump. You can also choose to just write a directory entry for the dump but not capture it.
- Capturing the last 3270 screen image associated with the abend.
- The extent of the CICS trace captured (complete, abending task only, or none).

These specifications can be made using a variety of criteria, including abend code, program name, transaction, terminal, NETNAME, operator ID, user ID, APPLID, local CICS SYSID, or a combination of criteria.

Note: Several of the actions controlled by transaction dump profiles have corresponding transaction dump global options. If a transaction dump profile option contradicts a transaction dump global option, the transaction dump profile option overrides the transaction dump global option.

A sample Temporary Tran Dump Profile screen is shown in Figure A-2 on page A-4.

Note: Although Figure A-2 on page A-4 shows temporary transaction dump profile entries, the default transaction dump profile entry that you'll see when you initially access the screen is blank. This means that, by default, nothing is considered an exception condition, and transaction dumps are processed for all abends according to the options specified in the transaction dump global options member assigned to each CICS region, unless there is an entry for the abend in the permanent transaction dump profile.

Figure A-2. Temporary Tran Dump Profile Screen

```
Abend-AID for CICS ----- Temporary Tran Dump Profile ----- ROW 000001 OF 000002

Press PF1 for more information about dump profiles and using this screen.
_____________________________________________________________________________________


A Add a New Entry
I Insert a Condition Statement                          D Delete

                                AND/   Supp AA/CICS  IBM  Entry L3270 CICS
   Resource  Operator  Literal   OR     Dups Dump     Dump Only  Image Trace
   ---------------------------------------------------------------------------
_  ABCODE    EQ        ASRA      AND    Y    Y        N    N     Y     NONE
_  PROGRAM   NE        MYPGM
   ---------------------------------------------------------------------------
_  PROGRAM   EQ        MYPGM2           N    Y        Y    N     N     TASK
   ---------------------------------------------------------------------------
_  ABCODE    EQ        AEI*             Y    Y        N    N     Y     FULL


   ********* PF3 SAVE  PF4 CANCEL  BOTTOM OF TABLE  PF7 UP  PF8 DOWN *********
```

A distinction is made between a profile condition statement and a profile entry. A profile *condition statement* is a single line in the scrollable area of the Temporary Tran Dump Profile screen. A profile *entry* is one or more condition statements that comprise a single action (entry). Profile entries are delimited by a dashed line.

When multiple condition statements are grouped together in a single entry, you should include a comparison operator (**AND** or **OR**) on the first statement in the entry. The comparison operator is propagated to *all* statements in the entry, so you cannot mix AND and OR comparisons within an entry. AND is the default comparison operator.

Further, the Supp(ress) Dups, AA/CICS Dump, IBM Dump, Entry Only, L3270 Image, and CICS Trace options apply to *all* condition statements within a single profile entry, but are only specified on the *first* condition statement in the entry.

The sample Temporary Tran Dump Profile screen in Figure A-2 shows three entries: the first with two condition statements, and the second and third with one condition statement each.

The first entry in the profile is:

```
(Implied IF)  ABCODE  EQ ASRA   AND
              PROGRAM NE MYPGM
```

This means that **IF** CICS is about to take an ASRA dump for any program except one called **MYPGM**, (because the condition specifies **PROGRAM** is not equal to **MYPGM**), **THEN** Abend-AID for CICS should do the following:

- Suppress the dump if it is a duplicate of one that has already been processed by Abend-AID for CICS.
- Capture dump information and perform Abend-AID for CICS analysis.
- Do not take an IBM dump.
- Do not write only a directory entry to the Abend-AID Directory (without capturing the dump information).
- Capture the last 3270 screen image.
- Do not capture any trace table entries.

The remaining two condition statements indicate what actions are taken **IF** a program called **MYPGM2** is going to take any kind of a dump, and **IF** any abend code that begins with AEI is about to be taken.

To modify a temporary transaction dump profile member:

1. Display the Temporary Tran Dump Profile screen, shown in Figure A-2 on page A-4, by specifying **AAON EXCP** from within CICS.

   Notes:

   a. The values you can specify for Resource are:
      - **ABCODE:** CICS abend code (ASRA, AEIM, etc.).
      - **APPLID:** APPLID of system on which transaction is executing.
      - **NETNAME:** Logical unit name for terminal in the VTAM network.
      - **OPID:** Three-character OPID from the TCTTE.
      - **PROGRAM:** Program ID in control at abend.
      - **SYSID:** Name for local CICS on which the transaction is executing.
      - **TERM:** Terminal ID at abend
      - **TRAN:** Transaction code at abend.
      - **USERID:** User ID signed onto the terminal.

   b. The values you can specify for Operator are:
      - **EQ:** Resource equal to literal.
      - **NE:** Resource not equal to literal.
      - **LT:** Resource less than literal.
      - **GT:** Resource greater than literal.
      - **LE:** Resource less than or equal to literal.
      - **GE:** Resource greater than or equal to literal.

   c. A single asterisk (*) is a wildcard character for the Literal field. For example, you can specify separate condition statements for ASRA and ASRB, or you can specify **ASR*** to use the same condition statement for all ASRx abends.

      The asterisk can be used at the end of a partial field value, but not at the beginning or in the middle. It can also be used in place of the field value to indicate that *all* values qualify for the condition set.

   d. The default transaction dump profile entry is blank. This means that, by default, nothing is considered an exception condition, and transaction dumps are processed for all abends according to the options specified in the transaction dump global options member assigned to each CICS region.

   e. Temporary transaction dump profiles are processed in top-down order. A transaction dump is processed according to the first statement it matches in the profile member. Keep this in mind when you are inserting and replicating statements, or if you are using the wildcard character.

2. Create or modify condition statements or entries, as follows:

- To modify existing information, simply type over the information with the new values, and press Enter. The screen is refreshed with your new values.
- To create a new profile condition statement:

   a. Type **I** next to the statement that will precede the new statement, and press Enter. The Temporary Tran Dump Profile screen is refreshed and displays the inserted line.

Note: Make sure that you are inserting the statement into an appropriate place, keeping in mind that the statements are processed in a top-down order from the table. There is no line command available for moving a statement; if you insert a statement in the wrong place, you must delete it and then re-insert it in the correct place.

b. Overtype the inserted line with the new values.

Repeat this process to add an additional condition statement to the entry. Remember that the AND or OR comparison operator, and the dump processing options (Supp(ress) Dups, FX Dump, etc.) are only specified on the first condition statement of a multiple-condition statement entry.

- To create a new profile *entry*:

  a. Type **A** next to the line that will precede the new entry, and press Enter. The Temporary Tran Dump Profile screen is refreshed and displays the inserted line, showing the Compuware default values.

  Note: Make sure that you are inserting the entry into an appropriate place, keeping in mind that the entries are processed in top-down order from the table. There is no line command available for moving an entry; if you insert an entry in the wrong place, you must delete it and then re-insert it in the correct place.

  b. Overtype the inserted line with the new values.

  c. To add additional condition statements to an entry, use the **I** line command next to the condition statement that will precede the new statement. Overtype the displayed values with the new values. Remember that the AND or OR comparison operator, and the dump processing options (Supp(ress) Dups, FX Dump, etc.) are only specified on the first condition statement of a multiple-condition statement entry.

3. To save your changes on the Temporary Tran Dump Profile screen, press **PF3**. To erase your changes, press **PF4**.

Appendix B. Symbols List

This appendix lists the MVS- and CICS-related symbols that Abend-AID for CICS uses primarily for CICS Transaction Server for z/OS and OS/390 region dumps. The symbols that apply to transaction dumps are so noted.

MVS Symbols List

The following MVS-related symbols are valid for *all* region dumps:

ASCB	address space control block for the current dump
ASID	address space ID for the current dump
ASXB	address space extension block
CVT	MVS communications vector table
JOBNAM	JES job name
JSCB	job step control block
JSTIME	job start time
MPRODN	product name of control program
PRDTCB	TCB address of the task that requested the dump
PRDTOB	clock value of the time of the dump
PSA	MVS prefixed save area
TCBJST	job step TCB

CICS Transaction Server Symbols List

The following CICS-related symbols are valid for CICS Transaction Server for z/OS versions 3.1, 2.3, 2.2 and CICS Transaction Server for OS/390 version 1.3 dumps only, except where otherwise noted:

APANCH	application domain anchor
APDOM	application domain table entry
APPLID	VTAM APPLID of CICS system
CCANCH	local catalog domain anchor
CCDOM	local catalog domain table entry
CSA	common system area (transaction dumps also)

CSAOPFL	CSA optional features list
DDANCH	directory manager anchor
DEANCH	distributed communications environment anchor
DMANCH	domain manager domain anchor
DMDOM	domain manager domain table entry
DSANCH	dispatcher domain anchor
DSCOSBD	dispatcher concurrent mode subdispatcher
DSCOTCB	dispatcher concurrent mode TCB
DSDOM	dispatcher domain table entry
DSFOSDB	dispatcher file owning mode subdispatcher *(Valid for CICS Transaction Server for OS/390 only)*
DSFOTCB	dispatcher file owning mode TCB *(Valid for CICS Transaction Server for OS/390 only)*
DSQRSBD	dispatcher quasireentrant mode subdispatcher
DSQRTCB	dispatcher quasireentrant mode TCB
DSROSBD	dispatcher resource-owning mode subdispatcher
DSROTCB	dispatcher resource-owning mode TCB
DSRPSDB	dispatcher RPC/ONC mode subdispatcher
DSRPTCB	dispatcher RPC/ONC mode TCB
DSSZSBD	dispatcher secondary LU mode subdispatcher
DSSZTCB	dispatcher secondary LU mode TCB
DUANCH	dump domain anchor
DUDOM	dump domain table entry
GCANCH	global catalog domain anchor
GCDOM	global catalog domain table entry
KEANCH	kernel domain anchor
KEDOH	kernel domain table header
KEDOM	kernel domain table entry
KERH	kernel error table header
KETAH	kernel task table header (first)
KETCH	kernel TCB table header
KEWRKA	kernel work area
KTCBCO	kernel TCB concurrent mode

KTCBJS	kernel TCB job step mode
KTCBQR	kernel TCB quasireentrant mode
KTCBRO	kernel TCB resource owning mode
KTCBSZ	kernel TCB secondary LU mode
LDANCH	loader domain anchor
LDDOM	loader domain table entry
LGANCH	log manager domain anchor *(Valid for CICS Transaction Server for OS/390 only)*
LMANCH	lock manager domain anchor
LMDOM	lock manager domain table entry
LSRPOOLn	local shared resource pool n
MEANCH	message domain anchor
MEDOM	message domain table entry
MNANCH	monitoring domain anchor
MNDOM	monitoring domain table entry
NQANCH	enqueue manager domain anchor *(Valid for CICS Transaction Server for OS/390 only)*
PAANCH	parameter domain anchor
PADOM	parameter domain table entry
PGANCH	program manager anchor
RMANCH	recovery manager domain anchor *(Valid for CICS Transaction Server for OS/390 only)*
SMANCH	storage manager domain anchor
SMDOM	storage manager domain table entry
SSDATE	step start date
SSTIME	step start time of day
STANCH	statistics domain anchor
STDOM	statistics domain table entry
TIANCH	timer domain anchor
TIDOM	timer domain table entry
TMPSPR	transaction manager static storage area (with prefix)
TMPSSA	transaction manager static storage area
TRANCH	trace domain anchor

TRDOM	trace domain table entry
TSANCH	temporary storage domain anchor *(Valid for CICS Transaction Server for OS/390 only)*
USANCH	user domain anchor
XMANCH	transaction manager anchor
XSANCH	security domain anchor

Appendix C.
Internal Transaction Abends

This appendix describes the Abend-AID for CICS internal transaction abends that may occur during Abend-AID for CICS transaction abend processing or viewing from CICS. Except for user abend U3264, these abends appear as entries on the Abend-AID Directory and are automatically locked. Contact Abend-AID for CICS Technical Support for help in resolving these abends. Manually delete the entries after the problem is resolved.

AAB1, AAB2, and AAB3

These internal Abend-AID for CICS DB2 transaction abends are for diagnostic purposes only. Processing of these abends is suppressed. Abend-AID for CICS Technical Support can provide a zap to produce these abends if they are needed to diagnose a problem, such as incomplete internal control block data. When produced, these abends appear as entries on the Abend-AID Directory.

AAB4

This internal transaction abend is caused by an error in the AADB transaction and appears as an entry on the Abend-AID Directory. Either an ER24 or ER25 internal transaction abend also appears as an entry on the Abend-AID Directory and is routed to the IBM transaction dump dataset, DFHDMPA or DFHDMPB.

ERAA

This internal transaction abend appears as an entry on the Abend-AID Directory if Abend-AID for CICS abends during transaction abend processing. This abend contains Abend-AID for CICS internal information that may be requested by Abend-AID for CICS Technical Support for debugging purposes.

ER24 and ER25

These internal transaction abends are caused by an error in program CTCCDB24 or CTCCDB25. When the error is in program CTCCDB24, an ER24 transaction entry appears on the Abend-AID Directory. When the error is in program CTCCDB25, an ER25 transaction entry appears on the Abend-AID Directory. ER24 and ER25 abends are also routed to the IBM transaction dump dataset, DFHDMPA or DFHDMPB. In addition, an AAB4 internal transaction abend appears as an entry on the Abend-AID Directory.

FXAE

This internal transaction abend appears as an entry on the Abend-AID Directory if Abend-AID for CICS abends during viewing from CICS. This abend contains Abend-AID for CICS internal information that may be requested by Abend-AID for CICS Technical Support for debugging purposes.

FXAS

This internal transaction abend appears as an entry on the Abend-AID Directory if Abend-AID for CICS abends during viewing from CICS. This abend contains Abend-AID for CICS internal information that may be requested by Abend-AID for CICS Technical Support for debugging purposes.

FXAV

This internal transaction abend appears as an entry on the Abend-AID Directory if Abend-AID for CICS abends during viewing from CICS. This abend contains Abend-AID for CICS internal information that may be requested by Abend-AID for CICS Technical Support for debugging purposes.

FXBV

This internal transaction abend appears as an entry on the Abend-AID Directory if Abend-AID for CICS abends during viewing from CICS. This abend contains Abend-AID for CICS internal information that may be requested by Abend-AID for CICS Technical Support for debugging purposes.

FXVW

This internal transaction abend appears as an entry on the Abend-AID Directory if Abend-AID for CICS abends during viewing from CICS. FXVW indicates an error occurred when trying to add a request to the view task queue. This abend contains Abend-AID for CICS internal information that may be requested by Abend-AID for CICS Technical Support for debugging purposes.

U3264

This user abend is generated by Abend-AID for CICS during transaction abend processing. It is a generalized abend for several Abend-AID for CICS requests that fail, such as unable to locate an internal control block or unable to load an Abend-AID for CICS module. A region dump is created, and its location depends on your site's CICS region configuration.

Glossary

This glossary gives a brief description of Abend-AID for CICS terms, CICS terms, and other related terms referred to in this document.

abend. ABnormal END of task. The termination of a job, prior to normal completion, due to an unresolved error condition.

address. A numeric group of hexadecimal characters that identifies a particular part of virtual or physical storage.

address space. The area of storage representing a batch job, started task, or TSO user. Each address space has two gigabytes of virtual storage, a segment table, and page tables for its private area. With the exception of MVS/ESA data spaces, each address space also has page tables for its common area that it shares with all other address spaces. (MVS/ESA data spaces do not map common areas.)

address space identifier (ASID). A unique, system-assigned ID for an address space.

ASRA. A transaction abend code assigned by CICS that indicates a task terminated abnormally because of a program check. DFHSRP is the CICS module responsible for detecting the errors that generate ASRAs.

base linkage locator (BLL) cell. Used by COBOL programs to provide addressability to data within the linkage section of a program.

chain. A group of logically linked storage locations or control blocks.

command. Request from a terminal to execute an operation or program.

COMMAND field. Field that appears in the upper left corner of Abend-AID for CICS screens. Most screens can be selected by entering the desired navigation command in the COMMAND field.

common system area (CSA). The CICS main storage control area that exists from system initialization until the system is shutdown. The CSA contains areas of data needed for CICS operation. The CSA control block contains the addresses of CICS nucleus programs, the anchor points of various chains, and other control information.

control block. An area of storage that holds dynamic data during the execution of application or control programs.

Customer Information Control System (CICS).

An IBM-licensed program that enables transactions entered at remote terminals to be processed concurrently by user-written application programs. It includes facilities for building, using, and maintaining databases.

customization information. Site-specific processing information, including tailoring parameters and local dataset names. This information is created during Abend-AID for CICS customization, and it is stored in the customization file.

database description (DBD). One of two main DL/I control blocks that describe a database's access and structure. (A program specification block is the other main control block.) A DBD describes the physical nature of a DL/I database, including how the database is stored on a storage device and how its data can be accessed.

dataset. Collection of data treated as a unit. It can be organized in various ways.

DB2 (DATABASE 2). IBM's database management system that provides a relational model of data. DB2 runs as a subsystem of MVS.

deadlock condition. A condition in which two or more tasks have enqueued distinct resources, and then subsequently attempted to enqueue those resources from each other, resulting in an indefinite wait. A deadlock condition may be *direct*, involving two processes, or *indirect*, in which multiple waits prevent any of the processes from continuing. Deadlock conditions can be avoided with proper use of locks and queuing.

destination control table (DCT). CICS table describing transient data files.

direct access storage device (DASD). Any peripheral device that is directly addressable, such as a disk or drum.

dispatch control area (DCA). A major CICS Version 2 control block used to control task dispatching. The DCA is a logical extension of the task control area (TCA). Information in the DCA includes a task's priority and dispatching status.

dispatcher task area (DTA). An area in CICS Version 3 and 4 used to schedule MVS task control blocks (TCBs) over the set of tasks that are ready to run.

DL/I (Data Language 1). A data manipulation language that provides a high-level interface between a user application and the operating system. Also, a database access language used under CICS/VS.

DSECT (dummy control section). A control section that an assembler can use to format an area of storage without producing object code.

DSECT file. A VSAM file allocated and formatted when Abend-AID for CICS is installed. Abend-AID for CICS uses it for DSECT displays.

dump. Hexadecimal representation of storage that may contain data useful for diagnosing an error.

dump analysis. The collective name given to a series of programs that are executed in a given order to perform the analysis functions for a new region dump. These functions include identifying the major control blocks, programs, and tables in the dump and assigning labels to them.

dump information file. A variable length VSAM file allocated during Abend-AID for CICS installation. One dump information file is allocated for each viewing server used. This file contains information about each dump imported into Abend-AID for CICS. It also contains diagnostic output information and saved paperclip lists.

dynamic storage area (DSA). A storage area in which the data can move or vary with time such that specified data are not always available for recovery.

enqueue. A programming mechanism that allows a program to have exclusive control over a resource until a dequeue is issued. Enqueues enable programs to single thread the access of a resource, such as a master record on a file.

exception. (1) An abnormal situation that may occur during a program's execution that may cause a deviation from the normal execution sequence, and for which facilities exist in the programming language to define, recognize, ignore, or handle it. (2) An abnormal condition such as an I/O error encountered in processing a dataset or file.

execute interface block (EIB). A block that contains information pertinent to a command-level transaction, such as the current time and date, transaction ID, task number, terminal ID, COMMAREA length, attention identifier, function code, and response code. EIB is part of EIS. It holds information about the command being executed, and this information is available to the application program.

execute interface storage (EIS). The interface between the application program and CICS control blocks.

file. Set of related records that are organized and treated as a unit.

file control table (FCT). A CICS table that defines the files that CICS programs can access. CICS uses the FCT to describe the datasets accessed by the file control program. Each entry describes the type of file services allowed, the access method used to get or put a record, and the record.

free area queue element (FAQE). Keeps track of unallocated space within most CICS Version 2 DSA pages assigned to a subpool.

hook. A location in a program, control block, or table that points to another program or routine.

import. The process of making a region dump known to Abend-AID for CICS. Import updates the Abend-AID Directory and, optionally, the Abend-AID for CICS IPCS directory with information about the type and location of the dump dataset. Abend-AID for CICS can be configured to invoke import automatically, and users can also manually initiate import when logged onto Abend-AID for CICS.

Interactive Problem Control System (IPCS). A component of the operating system that permits online problem management, interactive problem diagnosis, online debugging for disk-resident abend dumps, problem tracking, and problem reporting.

line command. Command that is typed directly on the line to be processed.

local shared resources (LSRs). Files that share a common pool of strings and a common pool of buffers. LSRs are control blocks that support I/O operations.

Multiple Virtual Storage (MVS). Actual name is OS/VS2-MVS. Operating system for large IBM mainframe computers.

offset. A relative location or position within a data area.

operation exception. An operation exception occurs when the CPU attempts to execute an instruction with an invalid operation code. The operation code may be unassigned, or the instruction with that operation code may not be installed on the CPU.

OS. Operating System.

page allocation map (PAM). A CICS control block that contains data used by CICS storage management to handle dynamic allocation and deallocation of DSA storage.

paperclip list. A list of paperclip tables.

paperclip table. A list of addresses that have been looked at during the research of a dump.

PLTPI. Program List Table Program Initialization.

PLTSD. Program List Table Shutdown.

primary command. Command that provides a general function and is entered in the COMMAND field.

processing program table (PPT). A CICS table defining most programs that can execute under CICS. Its purpose is to identify application programs to CICS, including those supplied by CICS.

program control table (PCT). A CICS table defining all transactions that can be executed.

program specification block (PSB). One of two main DL/I control blocks that describe a database's access and structure. (A database description is the other main control block.) A PSB controls the segments and fields that an application program can view and the operations it can perform, such as read-only, update, or delete.

program status word (PSW). Operating system control block that defines the current status and location of an executing program.

region. A variable-size subdivision of a dynamic area that is allocated to a job step or a system task.

snap dump. A dump taken at a specific point during the execution of a program. Processing usually continues after the dump has been taken.

storage. A functional unit into which data can be placed and from which it can be retrieved.

storage accounting area (SAA). Identifies the type of storage allocated, the bit configuration to which it was initialized, its length (including the SAA), and, if applicable, the address of the next piece of associated storage. Different types of SAAs exist for different types of storage.

subpool. A logical, though not necessarily contiguous, grouping of dynamic storage area pages. A subpool's size is dynamic and is a function of the frequency in which requests are issued for the subpool's type of storage.

subtask. Task initiated and terminated by a higher order task.

supervisor call (SVC). A request that serves as the interface into operating system functions, such as allocating storage. It protects the operating system from inappropriate user entry.

symptom string. A structured character string written to a file when the operating system detects certain error conditions.

SYS1.DUMPxx dataset. SVC dump dataset that can be used as input to Abend-AID for CICS analysis. Abend-AID for CICS can use only a copy of the dataset on DASD.

Note: If the SVC dump resides on tape, it must be loaded to DASD prior to Abend-AID for CICS analysis.

task. Execution of a program or multiple programs within CICS to perform a specific function. Each task is assigned a unique number (task number) by CICS.

task control area (TCA). Created for each task currently within CICS and released at task termination. Its contents are organized into three logical sections:

- CICS system control section addressed by the first field of the next logical section
- Application program communication section always addressed by register 12 during execution of the task
- LIFO storage.

A transaction work area is optionally created.

task control block (TCB). Control block containing information about each MVS task.

terminal control program (TCP). The program that controls CICS terminal activity.

terminal control table (TCT). A table describing a configuration of terminals, logical units, or other CICS systems in a CICS network.

terminal control table terminal entry (TCTTE).

A control block that describes the VTAM logical unit to CICS and represents the terminal to its associated task.

terminal input/output area (TIOA). The communications vehicle between CICS terminal management and an application. CICS terminal management passes data received from a terminal to the CICS applications program in the TIOA, and it writes data from the TIOA to the terminal.

trace. Record of the execution of a computer program; it exhibits the sequences in which the instructions were executed.

trace table. Storage area into which trace information is placed. This table contains the chronological occurrences of events that take place in CICS, recorded in wrap-around fashion within the trace table.

transaction. A unit of processing, which consists of one or more application programs, begun by a single request (usually from a terminal).

transaction dump capture address space (TDCAS). An MVS address space that is responsible for transaction dump capture and processing and is used by Abend-AID for CICS. One TDCAS is required on every MVS image where Abend-AID for CICS is installed. The TDCAS must be active to capture Abend-AID for CICS dumps.

transaction queue element (TQE). The token used to represent each transaction within the transaction manager domain. A TQE exists for the lifetime of the transaction it represents. TQEs are chained off the transaction manager static storage area.

viewing server. The MVS address space that controls the operation of Abend-AID for CICS. The viewing server must be active to view dumps, but it does not have to be active to process dumps. An operating system may support multiple viewing servers.

Virtual Storage Access Method (VSAM). An access method for direct or sequential processing of fixed and variable length records on direct access devices.

Virtual Telecommunications Access Method (VTAM). Set of programs that control communication between terminals and application programs.

=. Jump command symbol that routes screen access through the Primary Options menu. Pressing the END PF key on the resultant screen displays the Primary Options menu.

>. Jump command symbol that does not route screen access through the Primary Options menu. Pressing the END PF key on the resultant screen displays the screen from which the command was entered.

;. Default command delimiter used to string a series of commands.

Index

Special Characters

+offset command, 18-23
-offset command, 18-22
@offset command, 18-22

Numerics

3270 Bridge Information screen, 8-11

A

AAB1, AAB2, AAB3, internal transaction abends, C-1
AAB4, internal transaction abend, C-1
AADF transaction, 2-1, 4-1–4-2, 8-4
AADM supplied transaction, 12-1
AADP supplied transaction, 12-1
AAON Transaction Options Menu, A-1
abbreviated trace listing
  See Trace Listing screen
abend, defined, G-1
Abend-AID Directory, 1-9–1-10
  described, 4-2
  entries added via dump import, 13-1
  entry types, 4-4
  example, 4-3
  information-only entries, 4-4
  line commands, 4-5
  See also importing dumps
  See also working with dumps
Abend-AID for CICS access
  See accessing Abend-AID for CICS
Abend-AID for CICS overview, 1-1–1-14
ABENDTXT command, 18-3
accessing Abend-AID for CICS, 1-7
  selecting a viewing server, 2-2
accessing storage information, 5-1–5-9
Acrobat PDF online documentation, xxi
Add Source Dataset window, 10-4
address space, 4-4
  defined, G-1
  dump dataset, 13-2
  non-CICS, 13-2
  requirement for automatic dump analysis, 13-2
address space identifier, 4-8
  defined, G-1
address, defined, G-1
Addressability Detail (TCA) screen, 15-6
Allocated Private Subpools screen, 16-7
Allocated Storage Map screen, 16-43
analyzing a sample S0C7 data exception, 12-1
analyzing data exceptions, 12-1–12-12
  analyzing an S0C7 data exception, 12-1
analyzing dumps
  list of functions, 1-9
analyzing MVS virtual storage, 16-1–16-46
analyzing region dumps, 14-1–14-16
  See also Diagnostic Summary
  See also dump analysis
analyzing storage violations, 15-1–15-10
  overview, 15-1
analyzing transaction abends, 8-1–8-30
  3270 Bridge Information screen, 8-11
  Data Stream Analysis screen, 8-16
  DB2 Information menu, 8-20
    Bind Information screen, 8-21
    Columns Referenced screen, 8-22
    Host Variables screen, 8-20
    Package Dependencies screen, 8-24
    Precompile Information screen, 8-22
    RCT Detail screen, 8-23
  DFHRPL Concatenation screen, 8-13
  Diagnostic Summary, 8-2
  DL/I Information screen, 8-27
  Expanded Data Field screen, 8-12
  Hogan Information menu, 8-25
    Hogan ITCB screen, 8-25
    Hogan UPCB screen, 8-26
    Hogan UTCB screen, 8-26
  Last 3270 Screen Image, 8-15
  MSA Information screen, 8-28
  Program Detail screen, 8-6
  Program Listing screen, 8-10
  PSW Analysis screen, 8-18
  PSW Information screen, 8-17
  Registers screen, 8-19
  Task Detail screen, 8-8
  Terminal Detail screen, 8-9
  User Execute Interface Block screen, 8-14
architecture
  See product architecture
ASID
  See address space identifier
assembler instructions
  decoding in storage via DECODE, 18-9
  decoding in storage via DISASM, 18-10
ASSIST command, 1-13
  command list example, 18-7
  See also help
  syntax, 18-3
Attribute Test Screen, 17-5
audience for user's guide, xix
automatic storage areas, 9-11

B

BACKWARD command, 18-3
  See also scrolling screens
  See also UP command
base linkage locator cell, defined, G-1
Bind Information Screen, 8-21
BLOG command, 18-4
BookManager softcopy documentation, xxi
BORDERS command, 3-2
  See also screen attributes
  syntax, 18-4

BOTTOM command, 18-4
See also DOWN command
See also FORWARD command
See also scrolling screens

C

CANCEL command, 18-5
CCMENU command
default PF key, 17-6
primary command, 18-5
CHAIN command, 1-10, 5-8
CHAIN Command Parameters screen, 5-8
See also navigating storage
syntax, 18-5
CHAIN Command Parameters screen
displaying, 5-8
example, 5-8
See also CHAIN command
chain, defined, G-1
CICS
See Customer Information Control System
CICS information
available for display, 1-10
CICS Web Interface
support, described, 1-10, 1-12, 9-21
CLIP command, 18-6
CLR command, 18-7
CMDLIST command, 18-7
COBOL Storage Areas menu, 9-5
Columns Referenced Screen, 8-22
COMM command, 18-8
command
defined, G-1
help, 1-13
See also fast-path commands
See also jump commands
See also PF keys
See also primary commands
command delimiter default, G-4
COMMAND field, 3-1
defined, G-1
example, 3-4
See also OPTION field
Common Service Area Summary screen, 16-36
Common Storage Allocations screen, 16-29
Common Storage Users screen, 16-28
Common Storage Users screen, sorted by remaining total ESQA, 16-31
common system area
defined, G-1
Contact Information screen, 4-12
control block
defined, G-1
displaying in DSECT format, 18-11, 18-18
displaying in hexadecimal format, 18-15
running chains, 18-5
control blocks, 1-9
Control Blocks/Storage screen, 5-2
controlled storage area, 9-12
copyright/trade secrets notice, Compuware, 4-1
CORE command
compared to HEXD, 5-1
See also displaying storage
syntax, 18-8
coupling facility, 13-2
CRETRIEV command
described, 18-9
See also RETRIEVE command
CSA
See common system area
CSA Free Block Queue Elements screen, 16-37
CSA Subpool Allocations screen, 16-38
CSA Subpool Detail screen, 16-38
CSS DIRECTORY command
See printing
CSS DIRS command
See printing
CSS DIRX command
See printing
CTCCJRGN program, A-2
current paperclip table
See paperclip table
CURSOR command, 18-9
cursor point-and-shoot feature, 3-6
See also navigating from screen to screen
using a mouse, 3-7
Customer Information Control System
defined, G-1
customer support web site, xxi
customization information, defined, G-1
CWI
See CICS Web Interface

D

DASD
See direct access storage device
Data Locator Results screen, 9-16
Data Locator Search Criteria screen, 9-15
Data Stream Analysis screen, 8-16
database description
defined, G-1
Dataset Import
See importing dumps
Dataset Import screen, 13-3
dataset, defined, G-1
DB2 Information menu, 8-20
DB2 report, complete, 7-4, 7-6, 18-17, 18-24
DB2 summary report, 7-4, 7-7, 18-17, 18-24
DB2, defined, G-1
DBD
See database description
DCA
See dispatch control area
DCI and Application DMCBS screen, 8-29
DCI Trace screen, 8-30
DECODE command, 18-9
DEFAULTS command, 18-10
deleting dumps, 4-5
destination control table, defined, G-1
DFEs for Specific Page(s) screen, 16-33
DFEs in Size Queue Order screen, 16-35
DFHFDP program, 1-4
DFHRPL Concatenation screen, 8-13
DFHSM program, 4-6
Diagnostic Summary
displaying from the Abend-AID Directory, 4-5
for region dump analysis, 1-10, 15-3
for region dumps, 14-1, 15-3
for transaction abend analysis, 1-9, 8-2
for transaction abends, 8-2

See also analyzing region dumps
See also analyzing transaction abends
See also dump analysis
DIR command, 4-3
direct access storage device
defined, G-1
DIRECTORY, CSS command, 7-8
DIRX, CSS command, 7-8–7-9
DISASM command
default PF key, 17-6
syntax, 18-10
dispatch control area
defined, G-1
displaying additional transaction abend information, 9-1–9-22
automatic storage areas, 9-11
COBOL Storage Areas menu, 9-5
controlled storage area, 9-12
Data Locator Results screen, 9-16
Data Locator Search Criteria screen, 9-15
external storage areas, 9-13
File Recovery Information screen, 9-20
File Request Summary, 9-17
File-Related Areas screen, 9-19
LE Options Control Block screen, 9-22
Local File Detail screen, 9-18
PL/I Storage Areas menu, 9-10
PL/I Storage Display, 9-10
PL/I Storage Selection List, 9-9
Program Information menu, 9-2, 14-6
Program Listing screen for Local Storage, 9-8
Program Listing screen for the Linkage Section, 9-7
Program Listing screen for working storage, 9-6
Record Image screen, 9-19
Remote File Detail screen, 9-18
Static Storage Areas, 9-12
Web Information Summary menu, 9-21
displaying DSECTs
See DSECT
displaying screens
See navigating from screen to screen
displaying storage
allocated and unallocated segments, 5-3, 18-8
available methods, 5-1
DSECT format, 18-11, 18-18
hexadecimal format, 5-1, 18-8, 18-15
Memory Display, 5-3
See also navigating storage
SUMDUMP data, 5-4, 13-2
Distributed Viewing Support
remote source datasets, 1-9, 10-3
required READ authority, 10-3
required user ID and password, 10-3
DL/I Information screen, 8-27
DL/I, defined, G-2
Domain Analysis
list of domains, 1-11
DOWN command, 17-6, 18-11
default PF key, 17-6
See also FORWARD command
See also scrolling screens
DSECT
command syntax, 6-2, 18-11
defined, G-2
displaying control blocks in DSECT format, 6-1
DSECT Support screen, 6-1
file, G-2
listing DSECTs online, 6-3
See also displaying storage
See also mapping storage into DSECT format
supplied CICS Transaction Server for OS/390 DSECTs, 6-3
supplied CICS/ESA DSECTs, 6-3
System DSECT Table screen, 6-3, 18-18
DSECT Support screen
accessing data on, 6-2
displaying, 6-2
example, 6-1
suppressing DSECT equate statements on, 6-2
dummy control section
See DSECT
dump analysis
changing scheduling priority, 4-6
defined, G-2
displaying contact information, 4-7
See also analyzing dumps
starting
automatically, 13-2
from the Abend-AID Directory, 4-6, 13-2
terminating, 4-6
Dump Analysis Message Log, xxii
displaying
from the Abend-AID, 4-6
via MLOG command, 13-2
dump capture components
See region dump capture component
See transaction dump capture component
DUMP command, 4-3
dump domain exit
See product architecture
Dump Information screen, 13-3
dump management
See working with dumps
dump signature mismatch, 4-4
dump suppression, 4-10
expiration interval, 4-11
for region dumps, 4-11
for transaction dumps, 4-10
incrementing the DAE sequence number, 18-25
problem resolution, 18-25
RESETDAE command, 18-25
dump, defined, G-2
dump-independent functions
described, 1-8
See also transaction abend analysis
Duplicate History, 1-10
displaying
from the Abend-AID Directory, 4-6
via HISTORY command, 4-10
example, 4-10
expiration interval, 4-10
See also working with dumps
DVS
See Distributed Viewing Support
Dynamic Storage Area, 9-8
dynamic storage area
defined, G-2
Dynamic Storage Area Detail screen, 16-21
Dynamic Storage Area Summary screen, 16-21

E

EIB
See execute interface block

EIS
See execute interface storage
END command, 18-11
default PF keys, 17-5
See also EXIT command
Enqueue Summary screen, 14-13
enqueue, defined, G-2
Entry Information screen, 4-6
described, 4-8
displaying
from the Abend-AID Directory, 4-6
Entry Users screen, 4-9
example, 4-8
Entry Users screen, 4-9
ER24 and ER25, internal transaction abends, C-1
ERAA, internal transaction abend, C-1
exception, defined, G-2
execute interface block
defined, G-2
execute interface storage
defined, G-2
EXIT command, 18-12
See also END command
exiting Abend-AID for CICS, 2-4
Expanded Data Field screen, 8-12
External Cells, 9-7
external storage areas, 9-13

F

fast-path commands
availability, 3-9
defined, 3-8
See also navigating from screen to screen
Fault Summary
described, 4-1
displaying, 4-5
example, 4-2
See also working with dumps
FCT
See file control table
field help, 1-13
file control table
defined, G-2
File Detail screens, 9-18
File Information, 1-9
File Recovery Information screen, 9-20
File Request Summary, 9-17
file, defined, G-2
File-Related Areas screen, 9-19
FIND command, 1-10, 1-12
displaying and updating default parameters, 5-5
issuing, 5-4
See also navigating storage
See also RFIND command
syntax, 18-12
Find for Storage Display screen, 5-5, 18-12
fixed data area, 3-2
FORWARD command, 18-14
See also BOTTOM command
See also DOWN command
See also scrolling screens
free area queue element
defined, G-2
Free Block Queue Elements screen, 16-5
FrontLine support web site, xxi
full trace listing
See Trace Listing screen
FXAE, internal transaction abend, C-2
FXAS, internal transaction abend, C-2
FXAV, internal transaction abend, C-2
FXBV, internal transaction abend, C-2

G

GO command, 18-14

H

help
command help, 1-13
default PF keys, 1-12
field help, 1-13
HELP command, 18-14
message help, 1-13
MSGHELP command, 18-21
screen help, 1-12
See also ASSIST command
See also technical support
HELP command, 18-14
hexadecimal display, 5-3
HEXD CHAIN Command Parameters screen, 18-6
HEXD command
compared to CORE, 5-1
See also CORE command
See also displaying storage
syntax, 18-15
hiding screen components
border, 3-2, 18-4
instructional text, 18-15
line commands, 18-16
See also screen attributes
Hogan Information menu, 8-25
Hogan ITCB screen, 8-25
Hogan UPCB screen, 8-26
Hogan UTCB screen, 8-26
hook, defined, G-2
Host Variables Screen, 8-20
HTML documentation, xxi

I

IBMMSG command, 18-15
IMPORT command
displaying Dataset Import screen, 13-4
import process, defined, G-2
importing dumps, 1-9
automatically via MVS post-dump exit, 13-2
candidates for automatic import, 13-3
impact on Abend-AID Directory, 13-1
impact on dump analysis, 13-2
manually from Dataset Import screen, 13-3
manually from MVS console, 13-4
required dataset attributes, 13-1
See also selecting an entry
importing region dumps, 13-1–13-4
individual trace entry screen, 15-10
INFO command

default PF key, 17-6
information-only Abend-AID Directory entries, 4-4
INSTRUCT command, 18-15
See also screen attributes
Interactive Problem Control System
defined, G-2
interface control
See setting user controls
internal transaction abends, C-1–C-2
AAB1, AAB2, AAB3, C-1
AAB4, C-1
ER24 and ER25, C-1
ERAA, C-1
FXAE, C-2
FXAS, C-2
FXAV, C-2
FXBV, C-2
U3264, C-2
Internet, Compuware WWW address, xxi
introduction, xix
content of guide, xix
notation rules, xx
related publications, xxi
IPCS
See Interactive Problem Control System

J

JES2 System Log, 1-11
jump commands
availability, 3-9
defined, 3-8
equal sign (=) function, G-4
greater than sign (>) function, G-4
See also navigating from screen to screen
syntax, 3-8

K

Kernel Domain Error Table screen, 14-11

L

Language Environment
abend processing, 11-2
LE heap summary, 1-11
LE information summary, 1-11
options control block identified, 1-10, 9-22
region dump analysis, 1-11
report information, 11-1
support, described, 11-1
Language Environment Info option, 1-10
Last 3270 Screen Image, 8-15
LE
See Language Environment
LE Options Control Block screen, 9-22
LEFT command, 17-6, 18-16
default PF key, 17-6
See also scrolling screens
line commands
defined, G-2
example, 3-5
LINECMDS command, 18-16
See screen attributes
Link Pack Areas Map screen, 16-40
Linkage Section, 9-7
local shared resources
defined, G-2
Local Storage, 9-8
locating storage
See also navigating storage
via FIND command, 18-12
via WHERE command, 18-30
via WHO command, 18-31
locking entries from automatic deletion, 4-6
logging off Abend-AID for CICS, 2-4
logging onto Abend-AID for CICS
CICS access, 2-1
ISPF/PDF access, 2-1
See accessing Abend-AID for CICS
VTAM access, 2-1
LPRINT command
syntax, 7-3, 18-16
LSQA Subpool Detail screen, 16-17
LSQA Summary screen, 16-16
LSR
See local shared resources

M

managing source files, 10-1–10-8
Distributed Viewing Support, 10-3
See also analyzing transaction abends
Source Directory screen, 10-1
Source Mismatch Selection screen, 10-7
Source Program Directory, 10-5
Source Program Browse screen, 10-5
Source Program Information screen, 10-6
MAPD command, 18-18
mapping storage into DSECT format
See also DSECT
via DSECT command, 18-11
via MAPD command, 18-18
masking column data
automatically restoring mask values, 4-2
mask line, 3-3
resetting the column mask, 3-3, 18-25
SORT command, 18-28
MATCH command
default PF key, 17-6
See also navigating storage
See also WHO command
syntax, 18-20
Memory Display, 5-3, 15-4–15-5
enhanced for region dumps, 16-21
example, 5-3
function, 5-3
MODE command, 18-21
See also navigating storage
SUMDUMP data, 5-4
Memory Display screen, 16-12, 16-22
menus
Primary Options
for region dump analysis, 1-8
for transaction abend analysis, 1-8
message help, 1-13, 18-21
migrating dumps to archival storage, 4-6
MLOG command, xxii, 4-6

MODE command
syntax, 18-21
MQSeries Information
Abend-AID for WebSphere MQ, 1-10
MSA Information screen, 8-28
DCI and Application DMCBS screen, 8-29
DCI Trace screen, 8-30
MSGHELP command
See also help
syntax, 18-21
Multiple Virtual Storage
defined, G-2
general information provided, 1-10
MVS
See Multiple Virtual Storage
MVS post-dump exit
dump copy requirement, 13-1
importing dumps automatically, 13-2
See also importing dumps
See product architecture
tasks performed, 1-6
MVS Storage Analysis menu, 16-3
MVS subtask
See product architecture

N

navigating from screen to screen, 3-6
command availability, 3-9
cursor point-and-shoot feature, 3-6
using a mouse, 3-7
fast-path commands, 3-8
jump commands, 3-8
See also scrolling screens
navigating storage
displaying storage, 5-1
locating storage
FIND command, 5-4, 18-12
setting FIND command parameters, 5-5
WHERE command, 18-30
WHO command, 18-31
matching data, 18-20
Memory Display, 5-3
navigating by offset, 5-5
running control block chains, 5-8, 18-5
tracking storage navigation
paperclip table, 5-6
navigation commands, 3-7
See also fast-path commands
See also jump commands
NEWS command
syntax, 18-22
notation rules, xx
NOTE command, 18-22
Nucleus Map screen, 16-17, 16-42

O

offset
defined, G-2
navigating storage by, 5-5, 9-13, 18-22–18-23
online help
See help
operation exception, defined, G-3
OPTION field, 3-1
See COMMAND field
organization of user's guide, xix

P

P (Peek) line command, 8-11
Package Dependencies screen, 8-24
page allocation map
defined, G-3
paperclip facility, 5-6
paperclip list
defined, G-3
described, 5-7
displaying, 5-7
Saved Paperclip List screen, 5-7
See also paperclip table
paperclip table, 1-10
adding entries, 5-6
Current Paperclip Table screen, 5-6
defined, G-3
deleting all entries, 18-7
described, 5-6
displaying, 5-6
line commands, 5-6
restoring saved tables, 18-26
saving to paperclip list, 5-7, 18-27
See also paperclip list
PCLP command, 5-6
PCT
See program control table
PDF documentation, xxi
Peek line command, P, 8-11
PF Key Definitions screen
displaying, 17-7
example, 17-7
PF keys
modifying, 17-7
See also fast-path commands
See also primary commands
PL/I Storage Areas menu, 9-10
PL/I Storage Display, 9-10
post-dump exit
See MVS post-dump exit
PPT
See processing program table
Precompile Information screen, 8-22
presentation area, 3-2
primary commands, 18-1–18-31
+offset, 18-23
-offset, 18-22
@offset, 18-22
ABENDTXT, 18-3
ASSIST, 18-3
availability, 3-9
BACKWARD, 18-3
BLOG, 18-4
BORDERS, 18-4
BOTTOM, 18-4
CANCEL, 18-5
CCMENU, 18-5
CHAIN, 5-8, 18-5
CLIP, 18-6
CLR, 18-7
CMDLIST, 18-7
COMM, 18-8

command delimiter default, G-4
CORE, 5-1, 18-8
CRETRIEV, 18-9
CURSOR, 18-9
DECODE, 18-9
DEFAULTS, 18-10
defined, 3-8, G-3
DIR, 4-3
DISASM, 18-10
displaying command list, 18-7
DOWN, 18-11
DSECT, 6-2, 18-11
DUMP, 4-3
END, 18-11
EXIT, 18-12
FIND, 5-4, 18-12
FORWARD, 18-14
GO, 18-14
HELP, 18-14
help for, 3-8
HEXD, 5-1, 18-15
IBMMSG, 18-15
INSTRUCT, 18-15
LEFT, 18-16
LINECMDS, 18-16
LPRINT, 7-3, 18-16
MAPD, 18-18
MATCH, 18-20
MODE, 18-21
MSGHELP, 18-21
NEWS, 18-22
NOTE, 18-22
PCLP, 5-6
PRINT, 7-3, 18-23
RESET, 18-25
RESETDAE, 18-25
REST, 5-7
RESTORE, 18-26
RETRIEVE, 18-26
RETURN, 18-26
REXX, 18-26
RFIND, 18-27
RIGHT, 18-27
SAVE, 18-27
See also fast-path commands
See also PF keys
SORT, 18-28
SOURCE, 18-28
SRCINST, 18-29
TOP, 18-29
UNSTCK, 18-29
UP, 18-29
WHERE, 18-30
WHO, 18-31
Primary Options menu
for region dump analysis, 1-8
for transaction abend analysis, 1-8
PRINT command
syntax, 7-3, 18-23
printing
directory information, 7-8
logical screens, 7-1, 7-3, 18-16
P (Print) line command, 4-6, 7-1, 7-5
physical screens, 7-1, 7-3, 18-23
reports, 7-5
printing Abend-AID for CICS information, 7-1–7-9
Private Area Summary screen, 16-4
Private Subpool Detail screen, 16-10
Problem Log
browsing via BLOG command, 18-4
editing via NOTE command, 18-22
processing program table
defined, G-3
product architecture
dump domain exit, 1-3
illustration, region dump capture component, 1-5
illustration, transaction dump capture component, 1-3
illustration, viewing server component, 1-7
region dump capture component, 1-4
TDCAS, 1-4
transaction dump capture address space (TDCAS), 1-4
transaction dump capture component, 1-3
transaction dump interface, 1-3
viewing access methods, 1-7
viewing server component, 1-7
product overview
architecture, 1-2
general features, 1-12
Program Change Summary, 1-6, 14-15, A-2
program control table
defined, G-3
Program Detail screen, 8-6
Program Information
function, 1-9
Program Information menu, 9-2
Program Link Information screen, 9-2
line commands, 9-3
Storage Disassembly screen, 9-13
Program Listing screen, 8-10
accessing storage for a variable, 8-11
program specification block
defined, G-3
program status word
defined, G-3
Program Summary Information screen, 9-4
line commands, 9-4
Storage Disassembly screen, 9-13
PSB
See program specification block
PSW
See program status word
PSW Analysis screen, 8-18
PSW Information screen, 8-17
publications
Abend-AID for CICS, xxi

R

RCT Detail screen, 8-23
recalling dumps from archival storage, 4-6
Record Image screen, 9-19
region
defined, G-3
region dump analysis
list of functions, 1-10
See also analyzing dumps
See also Diagnostic Summary
See also dump-independent functions
region dump capture component
actions performed by region component, 1-4
DFHFDP program, 1-4
dump domain exit, 1-5

MVS post-dump exit, 1-6
region dump interface, 1-6
See also product architecture
SVC 51 interface, 1-6
region dump interface
function, 1-6
Program Change Summary, 1-6, 14-15, A-2
starting, A-2
stopping, A-1
region dump summary report, 7-8
Registers screen, 8-19
Remote Dataset Access window, 10-4
RESET command, 18-25
repositioning the display to offset zero, 5-5, 9-13, 18-25
See also masking column data
See also sorting column data
RESETDAE command, 18-25
RESTORE command, 18-26
RETRIEVE command
default PF key, 17-6
described, 18-26
See also CRETRIEV command
RETURN command, 18-26
default PF keys, 17-6
REXX API
coding REXX API programs, 19-1
SAMPREXX, sample REXX API EXEC, 19-2
toleration mode, 19-1
invoking, 19-1
SAMPREXX, sample program, 19-2
using, 19-1
REXX API commands
FXHEXD, 20-18
FXPCLEAR, 20-18
FXPCLIP, 20-18
FXPSHOW, 20-19
REXX API functions
FXADD, 20-1
FXDATE, 20-2
FXDIV, 20-3
FXDSDUP, 20-3
FXDSLEN, 20-4
FXDSMSK, 20-5
FXDSOFF, 20-5
FXDSSCL, 20-6
FXDSTYP, 20-7
FXGET, 20-8
FXGETC, 20-9
FXINFO, 20-10
FXJDATE, 20-11
FXMODE, 20-12
FXMULT, 20-12
FXREM, 20-13
FXSTIME, 20-13
FXSUB, 20-14
FXSYMBOL, 20-15
FXTABENT, 20-15
FXTM, 20-17
FXTRACE, 20-17
REXX command, 18-26
RFIND command, 18-27
default PF keys, 17-6
See also Find command
See also navigating storage
RIGHT command, 17-6, 18-27
default PF key, 17-6
See also scrolling screens
Row field, 3-3
See scrolling screens
running control block chains
CHAIN command, 18-5
See also control block
See also navigating storage

S

SAVE command, 18-27
saved paperclip list
See paperclip list
screen attributes
See also screen layout
showing/hiding
border, 3-2, 18-4
instructional text, 18-15
line commands, 18-16
Screen Attributes screen, 17-4
screen format
fixed data area, 3-2
IBM terminal emulations, 3-3
mask line, 3-3
presentation area, 3-2
scroll information fields, 3-2
scrollable data area, 3-2
screen help, 1-12
screen layout
border, 3-2
command fields, 3-4
line commands, 3-5
screen attribute defaults, 3-5
See also screen attributes
screen navigation
See navigating from screen to screen
screens (illustrated)
3270 Bridge Information, 8-12
AAON Transaction Options Menu, A-1
Abend-AID Directory, 4-3
Add Source Dataset window, 10-4
Allocated Private Subpools, 16-7
Allocated Storage Map, 16-43
Attribute Test Screen, 17-5
CHAIN Command Parameters, 5-8
COBOL Storage Areas menu, 9-6
Command List example, 18-7
Common Service Area Summary, 16-36
Common Storage Allocations, 16-29
Common Storage Users, 16-28
Contact Information, 4-12
Control Blocks/Storage, 5-2
CSA Free Block Queue Elements, 16-37
CSA Subpool Allocations, 16-38
CSA Subpool Detail, 16-38
Current Paperclip Table, 5-6
Data Locator Results, 9-16
Data Locator Search Criteria, 9-15
Data Stream Analysis, 8-16
Dataset Import, 13-3
DB2 Information menu, 8-20
Bind Information, 8-21
Columns Referenced, 8-23
Host Variables, 8-20–8-21
Package Dependencies, 8-24
Precompile Information, 8-22
RCT Detail, 8-23

defined, G-3
DFEs for Specific Page(s), 16-33
DFEs in Size Queue Order, 16-35
DFHRPL Concatenation, 8-13
Diagnostic Summary, 8-2, 15-3
  Expanded Data Field, 8-12
  region dump analysis (abbreviated text), 14-3
  region dump analysis (full text), 14-2
  transaction abend analysis, 8-2
DL/I Information, 8-27
DSECT Support, 6-1
Duplicate History Log, 4-10
Dynamic Storage Area Detail, 16-21
Dynamic Storage Area Summary, 16-21
Enqueue Summary, 14-14
Entry Users, 4-9
Expanded Data Field, 8-12
Fault Summary, 4-2
File Recovery Information, 9-21
File Request Summary, 9-17
File-Related Areas, 9-20
Find for Storage Display, 5-5
Hogan Information menu, 8-25
Kernel Domain Error Table, 14-12
Last 3270 Screen Image, 8-15
LE Options Control Block, 9-22
Link Pack Areas Map, 16-40
Local File Detail, 9-18
LSQA Subpool Detail, 16-17
Memory Display, 5-3, 16-12, 16-22
Memory Display for Static Storage Areas, 9-12
MSA Information, 8-28
  DCI and Application DMCBS, 8-29
  DCI Trace, 8-30
MVS Storage Analysis menu, 16-3
Nucleus Map, 16-17, 16-42
PF Key Definitions and Labels, 17-7
PL/I Automatic Storage List, 9-11
PL/I Controlled Storage List, 9-12
PL/I External Storage List, 9-13
PL/I Storage Areas menu, 9-11
PL/I Storage Display, 9-10
PL/I Storage Selection List, 9-9
Primary Options menu
  for region dump analysis, 1-8
  for transaction abend analysis, 1-8
Print Options and Initiation, 7-2, 17-3
Private Area Summary, 16-4–16-5
Private Subpool Detail, 16-10
Program Change Summary, 14-15
Program Detail, 8-7
Program Information menu, 9-2
Program Link Information screen, 9-3
Program Listing, 8-11
Program Listing for Linkage Section, 9-7
Program Listing for local storage, 9-8
Program Listing for working storage, 9-6
Program Summary Information, 9-4
PSW Analysis, 8-18
PSW Information, 8-17
Record Image, 9-19
Region Entry Information, 4-8
Registers, 8-19
Remote Dataset Access window, 10-4
Remote File Detail, 9-18
REXX Interface, 19-5
Saved Paperclip List, 5-7
Screen Attributes, 17-4
  Server Selection, 2-2
  Source Dataset Information, 10-3
  Source Directory, 10-2
  Source Mismatch Selection, 10-7
  Source Program Browse, 10-5
  Source Program Directory, 10-5
  Source Program Directory for source mismatch selection, 10-8
  Source Program Information, 10-6
  SQA Subpool Detail, 16-32
  SQA Summary, 16-27, 16-34
  Storage Address Analysis, 14-16
  Storage Addressability Summary, 14-16
  Storage Disassembly, 9-14, 16-12
  Storage Disassembly, alternate, 9-14
  Summarized CSA Subpools, 16-37
  Summarized LSQA Subpools, 16-16
  Summarized Private Subpools, 16-8
  Summarized SQA Subpools, 16-32
  Task Detail, 8-8, 14-5
  Task Summary, 14-7
  Task/Wait Analysis, 14-8–14-9
  Task/Wait Analysis menu, 14-6
  TCB Summary, 16-11, 16-13
  Temporary Tran Dump Profile, A-4
  Terminal Detail, 8-10
  Trace Listing, abbreviated, 14-10
  Trace Listing, full, 14-11, 15-10
  Trace Listing, short, 14-10
  Transaction Entry Information, 4-7
  User Controls, 17-1
  User Execute Interface Block, 8-14
  User Profile, 17-2
  Virtual Storage Map, 16-3, 16-26
  Web Information Summary menu, 9-22
SCROLL field, 3-3
scrolling screens
  BACKWARD command, 18-3
  BOTTOM command, 18-4
  DOWN command, 18-11
  FORWARD command, 18-14
  LEFT command, 18-16
  RIGHT command, 18-27
  scroll information fields, 3-2
  scrollable data area, 3-2
  See also navigating from screen to screen
  TOP command, 18-29
  UP command, 18-29
SDATA=COUPLE, 13-2
selecting a dump
  from the Abend-AID Directory, 4-5
  See also importing dumps
selecting a viewing server, 2-2
  Server Selection screen, 2-2
selecting an entry
  from the Abend-AID Directory, 4-5
Server Selection screen, 2-2
server, viewing
  See viewing server
setting user controls, 1-9, 17-1–17-8
short trace listing
  See Trace Listing screen
showing screen components
  border, 3-2, 18-4
  instructional text, 18-15
  line commands, 18-16
  See also screen attributes
signing onto Abend-AID for CICS

See accessing Abend-AID for CICS
softcopy documentation, xxi
SORT command, 18-28
sorting column data
automatically restoring sort values, 4-2
resetting the column sort, 3-3, 18-25
SORT command, 3-3, 18-28
SOURCE command, 18-28
Source Dataset Information screen, 10-3
Source Directory screen, 10-1
Source Dataset Information screen, 10-3
Source Program Directory, 10-5
Source Program Directory for source mismatch selection, 10-8
Source Mismatch Selection screen, 10-7
Source Program Directory, 10-5
Source Program Browse screen, 10-5, 10-7
Source Program Information screen, 10-6
Source Program Directory for source mismatch selection, 10-8
source support datasets
managing, 10-1
remote, 1-9, 10-3
SPLIT command
default PF keys, 17-5
SQA Subpool Detail screen, 16-32
SQA Summary screen, 16-27, 16-34
SRCINST command, 18-29
Static Storage Areas, 9-12
storage
defined, G-3
See also displaying storage
See also mapping storage into DSECT format
See also navigating storage
See also tracking storage navigation
Storage Address Analysis screen, 14-16
Storage Addressability Summary, 15-5
Storage Addressability Summary screen, 14-15, 18-20
Storage Disassembly screen, 9-13, 16-12, 17-6, 18-10
Storage Map Display screen, 5-3, 18-8
storage navigation
See navigating storage
storage violation
See analyzing storage violations
storage violation dump example, 15-2
subpool
defined, G-3
subsystem information, 1-12
subtask
defined, G-3
SUMDUMP data, displaying, 5-4, 13-2
Summarized CSA Subpools screen, 16-37
Summarized LSQA Subpools screen, 16-16
Summarized Private Subpools screen, 16-8
Summarized SQA Subpools screen, 16-32
summary report, DB2, 7-7
summary report, region, 7-8
summary report, transaction, 7-6
supervisor call (SVC)
defined, G-3
supplied transaction
AADF, 2-1, 4-1–4-2, 8-4
AADM, 2-2, 12-1
AADP, 12-1
AAON, A-1–A-6
SVC 51 interface, 1-6
See product architecture
SVC dump
notification, 1-6
parameter list, 1-12
SWAP command
default PF key, 17-6
symbols
CICS-related for CICS Transaction Server dumps, B-1
MVS-related for all dumps, B-1
symptom string
defined, G-3
syntax conventions, 18-2
syntax diagrams, 18-2
SYS1.DUMPxx dataset, 1-6
defined, G-3
importing dumps from, 13-1
SYSLOG, 1-11
System DSECT Table screen, 6-3, 18-18
system environment, requirements, 1-2

T

task
defined, G-3
task analysis
access, 1-10
task control area
defined, G-3
task control block
defined, G-3
Task Detail screen
for region dumps, 14-5
for transaction abends, 8-8
Task Global Table, 9-7
Task Subpool Summary Display screen, 15-2
Task Summary screen, 14-7
Task/Wait Analysis menu, 14-6
Task/Wait Analysis screen, 14-7
TCA
See task control area
TCB
See task control block
TCB Summary screen, 16-11, 16-13
TCP
See terminal control program
TCT
See terminal control table
TCTTE
See terminal control table terminal entry
technical support, xxi
See also help
Temporary Tran Dump Profile screen, A-4
terminal control program
defined, G-3
terminal control table
defined, G-4
terminal control table terminal entry, 15-2
defined, G-4
Terminal Detail screen, 8-9
terminal input/output area, 15-2
defined, G-4
TIOA
See terminal input/output area
TOP command, 18-29
See also BACKWARD command
See also scrolling screens
See also UP command

TQE
See transaction queue element
trace
defined, G-4
Trace Listing screen
abbreviated, 14-10, 15-7–15-9
CICS Transaction Server, 15-7–15-10
full, 14-11, 15-10
short, 14-10
trace table, 1-10
defined, G-4
tracking storage navigation
paperclip list, 5-7
paperclip table, 5-6
See also navigating storage
transaction
defined, G-4
See also supplied transaction
transaction abend analysis
list of functions, 1-9
See also analyzing transaction abends
See also dump-independent functions
transaction abend summary report, 7-6
transaction dump capture address space
defined, G-4
transaction dump capture component
actions performed by transaction component, 1-2
dump copy requirement, 13-1
dump domain exit, 1-3
transaction dump capture address space (TDCAS), 1-4
transaction dump interface, 1-3
transaction dump profiles, modifying, A-3
transaction dump interface
starting, A-2
stopping, A-1
transaction queue element
defined, G-4
transaction report, complete, 7-4, 18-17, 18-24

U

U3264, internal user abend, C-2
unlocking entries for automatic deletion, 4-6
UNSTCK command, 18-29
UP command, 17-6, 18-29
default PF key, 17-6
See also BACKWARD command
See also scrolling screens
User Controls facility
See setting user controls
User Execute Interface Block screen, 8-14
user interface, 3-1–3-9
See viewing access methods
User TCA Interpreted screen, 15-6

V

viewing access methods, 1-7
relation to the viewing server, 1-7
See product architecture
viewing server
actions performed by, 1-7
defined, G-4
log file, xxii
See also product architecture
Virtual Storage Map menu, 16-3
Virtual Storage Map screen, 16-26
virtual storage, MVS
See analyzing MVS virtual storage
Virtual Telecommunications Access Method
Abend-AID for CICS access via, 1-8
defined, G-4
See also accessing Abend-AID for CICS
VTAM
See Virtual Telecommunications Access Method

W

wait analysis
access, 1-10
Web Information Summary menu, 9-21
WHERE command, 1-12
See also navigating storage
syntax, 18-30
WHO command, 1-12
See also MATCH command
See also navigating storage
syntax, 18-31
Working Storage, 9-6
working with dumps, 4-1–4-12
Abend-AID Directory, 4-2
Duplicate History Log, 4-9
Entry Information screen, 4-8
Entry Users screen, 4-9
Fault Summary, 4-1
World Wide Web, Compuware address, xxi

X

XCFAS, 13-2

Z

z/OS SVC dump information, 1-12