STATE OF CONNECTICUT DEPARTMENT OF HOUSING
CDBG-COMMUNITY DEVELOPMENT BLOCK GRANT
SUPERSTORM SANDY DISASTER RECOVERY PROGRAM

QUI TRANSTULIT SUSTINET

AREA MAP

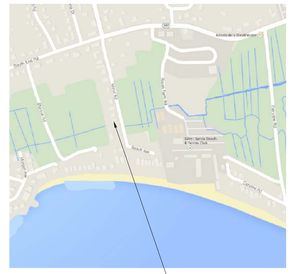

PROJECT SITE

SPONSOR
State of Connecticut
Department of Housing
505 Hudson Street
Hartford, Connecticut 06106

OWNER
Application No. 5040
Susan Ranalli
105 Minor Road (AKA 30 Minor Road)
East Haven, Connecticut 06512

ARCHITECT:
Lothrop Associates LLP
333 Westchester Avenue, White Plains, New York 10604
510 Clinton Square, Rochester, New York 14620
125 Half Mile Road, Suite 200, Red Bank, New Jersey 07701
100 Pearl Street, 14th Floor, Hartford, Connecticut 06103

ENVIRONMENTAL ENGINEER:
Fuss & O'Neill EnviroScience, LLC
146 Hartford Road, Manchester, Connecticut 06040
56 Quarry Rd, Trumbull, Connecticut 06611

STRUCTURAL ENGINEER:
Cmars Engineering, LLC
58 Orchard Hill Road, Branford, Connecticut 06405

SURVEYOR:
Criscuolo Engineering LLC
420 East Main Street, Building 1 Suite 9,
Bradford, Connecticut 06405

GENERAL NOTES

1. DO NOT OBSTRUCT ACCESS TO THE SITE.
2. PROTECT ALL AREAS FROM FALLING DEBRIS.
3. MAINTAIN ALL EXISTING SITE ELEMENTS (PAVING, FENCES, BUILDINGS, ETC.) AND PLANTINGS & LAWNS. CONTRACTOR SHALL REPLACE OR REPAIR ALL DAMAGE, AT THE CONTRACTORS EXPENSE.
4. MAINTAIN A SECURED AREA FOR ALL CONSTRUCTION MATERIALS & EQUIPMENT STORED ON SITE.
5. PROVIDE TARPED DUMPSTER FOR REMOVAL OF ALL RUBBISH AND CONSTRUCTION DEBRIS. DUMPSTER SHOULD BE ADEQUATELY PROTECTED DURING PROJECT. CONTRACTOR IS RESPONSIBLE FOR ALL TRASH PLACED IN AND AROUND DUMPSTER. DUMPSTER PERMIT COSTS TO BE INCLUDED IN THE BASE BID.
6. WORK SHALL COMPLY WITH ALL STATE & LOCAL CODES, REGULATIONS AND ORDINANCES.
7. AT PROJECT COMPLETION, REMOVE ALL CONSTRUCTION DEBRIS AND PATCH/REPAIR ALL SURFACES DAMAGED BY CONTRACTOR ACTIVITIES. THOROUGHLY CLEAN ALL WORK AREAS OF ALL DEBRIS RESULTING FROM WORK OF THIS CONTRACT.
8. OWNER SHALL HAVE ALL UTILITIES PROPERLY DISCONNECTED CAPPED AND TERMINATED. G.C. SHALL EXTEND & RECONNECT ALL UTILITIES AS REQUIRED. COORDINATE WITH UTILITY COMPANIES AND AUTHORITIES HAVING JURISDICTION
9. THE SPECIFICATION MANUAL IS AN INTEGRAL PART OF THESE DOCUMENTS AND SHALL BE CONSIDERED A COMPONENT OF THESE DOCUMENTS AS IF INCLUDED HEREIN.
10. DEMOLITION OF THE EXISTING RESIDENCE IS NOT PART OF CONTRACT. OWNER IS RESPONSIBLE FOR ALL DEMOLITION INCLUDING BUT NOT LIMITED TO REQUIRED PERMITS AND APPROVALS, REMOVAL OF EXISTING FOUNDATIONS, FOOTINGS, ABATEMENT OF HAZARDOUS MATERIALS, SITE CLEARING AND GRADING & REMOVAL OF ALL DEMOLITION DEBRIS OFF-SITE. CONTRACTOR SHALL ASSUME SITE WILL BE LEFT, ROUGH GRADED AND REASONABLY FLAT.
11. DO NOT START PILE DRIVING OPERATIONS UNTIL THE EXISTING PILES HAVE BEEN EXTRACTED. FILL HOLES LEFT BY EXTRACTED PILES USING COHESIONLESS SOIL, SUCH AS GRAVEL-SAND MIXTURES.
12. ALL INTERIOR PARTITION DIMENSIONS SHOWN ON PLANS ARE TO FIN. SURFACE (GYP. BD.) U.O.N.

DRAWING LIST

ARCHITECTURAL

G-001	COVER SHEET
G-002	SITE PLAN AND ZONING DATA
A-101	FOUNDATION PLAN, FIRST FLOOR PLAN & NOTES
A-102	ATTIC PLAN AND ROOF PLAN
A-103	ROOF DETAILS
A-201	BUILDING ELEVATIONS
A-301	BUILDING SECTIONS AND DETAILS
A-302	MISCELLANEOUS DETAILS

STRUCTURAL

S-100	PILE PLAN AND FIRST FLOOR FRAMING PLAN
S-101	SECOND FLOOR AND ROOF FRAMING PLAN
S-102	STRUCTURAL DETAILS
S-103	BORING LOCATION PLAN AND BORING LOGS

SITE REFERENCE

1 OF 3	COASTAL SITE PLAN
2 OF 3	EXISTING CONDITIONS PLAN
3 OF 3	EROSION and SEDIMENTATION NOTES and DETAILS

ABBREVIATIONS

AFF	ABOVE FINISH FLOOR	HORIZ	HORIZONTAL
ADJ	ADJACENT	HWH	HOT WATER HEATER
ALUM	ALUMINUM	JB	JUNCTION BOX
APPROX	APPROXIMATE	LO	LINE OF
ARCH	ARCHITECTURAL	LVL	LAMINATE VENEER LUMBER
BTM	BOTTOM	MAX	MAXIMUM
B.O.	BOTTOM OF	MC	MEDICINE CABINET
CJ	CEILING JOISTS	MI	MIRRORED MEDICINE CABINET
CL	CENTERLINE	MIN	MINIMUM
CLOS	CLOSET	MO	MASONRY OPENING
CMU	CONCRETE MASONRY UNIT	MV	MICROWAVE
COL	COLUMN	NIC	NOT IN CONTRACT
CONC	CONCRETE	OA	OVERALL
CONT	CONTINUOUS	OC	ON CENTER
COORD	COORDINATE	OPP	OPPOSITE
CT	CERAMIC TILE	PSL	PARALLEL STRAND LUMBER
DW	DISHWASHER	PT	PRESSURE TREATED
DWG	DRAWING	REF	REFRIGERATOR
E/F	EXHAUST FAN	REINF	REINFORCED
EX	EXISTING	RO	ROUGH OPENING
EL	ELEVATION	RM	ROOM
EP	ELECTRICAL PANEL	RR	ROOF RAFTERS
EQ	EQUAL	SD	SMOKE DETECTOR
EQUIP	EQUIPMENT	SIM	SIMILAR
EQUIV	EQUIVALENT	SPEC	SPECIFICATIONS
FIN	FINISH	STD	STANDARD
FDN	FOUNDATION	STL	STEEL
FJ	FLOOR JOISTS	STRUCT	STRUCTURAL
FLR	FLOOR	T.O.	TOP OF
FLHB	FROST PROOF HOSE BIB	TYP	TYPICAL
FV	FLOOD VENT	VCT	VINYL COMPOSITE TILE
GALV	GALVANIZED	VERT	VERTICAL
GB1	GRADE BEAM 1	VIF	VERIFY IN FIELD
GFCI	GROUND FAULT CIRCUIT INTERRUPTER	W/D	WASHER/ DRYER COMBO
GWB	GYPSUM WALL BOARD	WD	WOOD
GYP	GYPSUM	WP	WEATHERPROOF
HDWD	HARDWOOD FLOORING	WWF	WELDED WIRE FABRIC (MESH)
HM	HOLLOW METAL	U/C	UNDER CABINET (LIGHTING)

SYMBOLS LEGEND

- EXISTING PARTITION/ WALL TO REMAIN
- NEW PARTITION/ WALL
- NEW FOUNDATION WALL AND FOOTINGS
- EXISTING TO BE REMOVED
- EXISTING ITEM ABOVE
- EXISTING WINDOW TO REMAIN
- NEW WINDOW
- NEW DOOR
- EXISTING DOOR TO REMAIN
- NEW "SMART VENT" FLOOD VENT (FV)
- PLYWOOD
- CONCRETE
- RIGID INSULATION
- NEW WATER METER (W)
- DETAIL TAG: SECTION NUMBER / DRAWING NUMBER (0 / A-00)
- SECTION KEY: SECTION NUMBER / DRAWING NUMBER (0 / A-00)
- ELEVATION KEY: ELEVATION NUMBER / DRAWING NUMBER (0 / A-000)
- KEYED NOTE TAG (C#)
- ROOF SLOPE (X)
- REVISION (#)
- GRAVEL
- WOOD DECKING
- NEW GAS METER (G)
- SETBACK LINE
- SILT BARRIER
- CONSTRUCTION FENCE
- PROPERTY LINE

ELEC./ UTILITY LEGEND

- EP — ELECTRICAL PANEL
- DUPLEX OUTLET
- GFCI — DUPLEX OUTLET – GROUND FAULT CIRCUIT INTERRUPTER
- S — DEDICATED OUTLET – STOVE
- DW — DUPLEX OUTLET – DISHWASHER
- MC — DUPLEX OUTLET – MICROWAVE
- WP — DUPLEX OUTLET – WEATHER PROOF
- TV — TV/ CABLE JACK
- TELEPHONE/ DATA JACK
- GAS CONNECTION
- SWITCH
- 3 WAY SWITCH
- WIRING
- S — CEILING MOUNTED SMOKE DETECTOR
- CO — CEILING MOUNTED CARBON MONOXIDE DETECTOR
- E/F — CEILING MOUNTED EXHAUST FAN WITH LIGHT
- U/C — UNDER CABINET TASK LIGHTING
- RECESSED DOWN LIGHT
- WALL MOUNTED LIGHT
- WALL MOUNTED EXTERIOR LIGHT
- FAN — CEILING MOUNTED FAN WITH LIGHT
- HD — CEILING MOUNTED HEAT DETECTOR

Lothrop
Lothrop Associates LLP Architects
100 Pearl Street
14th Floor
Hartford, Connecticut 06103
860-249-7251
White Plains Red Bank Hartford Rochester

STRUCTURAL ENGINEER:
Cmars Engineering, LLC
STRUCTURES FOUNDATIONS INVESTIGATIONS
58 Orchard Hill Road, Branford, CT 06405
Tel 203-483-8789 Fax 203-483-8285

SURVEYOR:
CRISCUOLO ENGINEERING LLC

ENVIRONMENTAL ENGINEER:
FUSS & O'NEILL EnviroScience, LLC
146 HARTFORD ROAD
MANCHESTER, CONNECTICUT 06040
860.646.2469
www.fuss&o'neill.com

ISSUE NO.	ISSUE DATE	DESCRIPTION
1	26 MARCH 2015	ISSUED FOR BID

State Of Connecticut
Department Of Housing
505 Hudson Street
Hartford, Connecticut 06106

Construction Of
New Residence
for
Susan Ranalli
Application No. 5040
105 Minor Road
(AKA 30 Minor Road)
East Haven, Connecticut 06512

COVER SHEET

PROJECT NO.: 1524-28
SCALE: AS NOTED

DRAWING NO.:
G-001

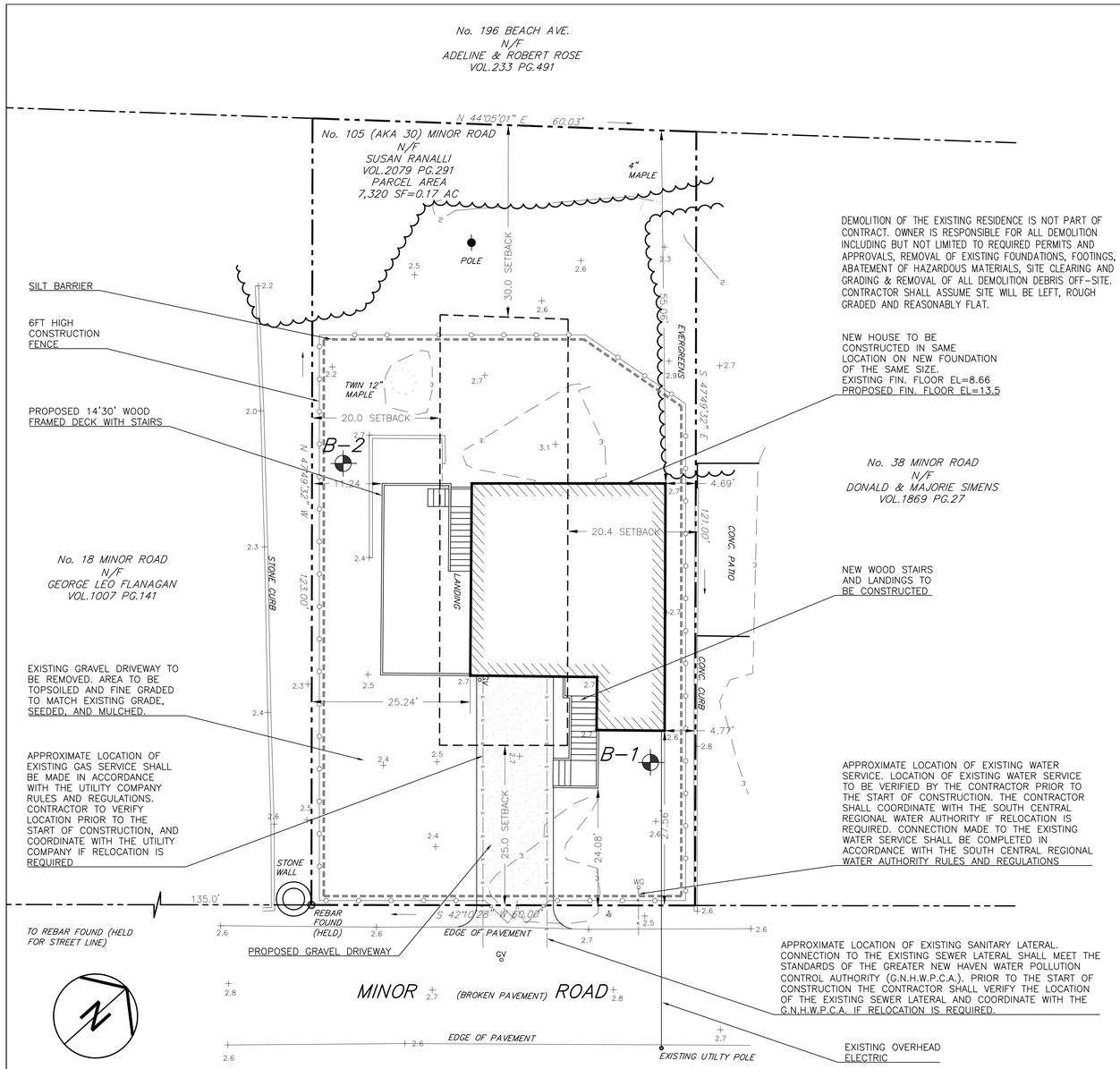

1 SITE PLAN
1"=10'

SITE PLAN INFORMATION TAKEN FROM A SURVEY PREPARED BY CRISCUOLO ENGINEERING, LLC

MAP, BLOCK AND LOT: 010-0206-004

ALL DEMOLITION NOT IN CONTRACT

2 LOCATION MAP
1"=500'

ZONING DATA			
R-3 ZONE	REQUIRED	EXISTING	PROPOSED
LOT AREA	20,000 SF	7,320 SF	7,320 SF *EXISTING NONCONFORMANCE*
LOT FRONTAGE	100 FEET	60 FEET	60 FEET *EXISTING NONCONFORMANCE*
MAX BUILDING HEIGHT	40 FEET, 30 FEET WITH SETBACK RESTRICTION	21 FEET	30 FEET
SETBACK-STREET LINE	25 FEET	27.3 FEET	18.6 FEET @ STAIR LANDING *VARIANCE REQUIRED*
SETBACK-REAR	30 FEET	55.1 FEET	55.1 FEET
SETBACK-SIDE	20 FEET EA	4.8 FEET NORTH 24.8 SOUTH	4.8 FEET NORTH *EXISTING NONCONFORMANCE* 10.8 FEET SOUTH *VARIANCE REQUIRED*
MAX LOT COVEREAGE	20	13.7%	20%
MIN SQUARE DIMENSION	100 FEET	60 FEET	60 FEET *VARIANCE REQUIRED*
MAX NUMBER OF STORIES	3	1	1
MAX FLOOR AREA	40%	13.70%	13.70%
MIN FLOOR AREA PER DWELLING UNIT	900 SF	1005.3 SF	1005.3 SF

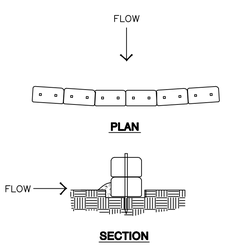

HAY BALE SEDIMENT BARRIER
NOT TO SCALE

1. EXCAVATE 4" DEEP TRENCH FOR LENGTH OF BALES.
2. PLACE AND STAKE BALES. TWO (2) STAKES PER BALE.
3. WEDGE LOOSE STRAW BETWEEN BALES.
4. BACKFILL AND COMPACT THE EXCAVATED SOIL ON UPHILL SIDE OF BARRIER.

1. INSPECT BALES AFTER EACH STORM EVENT.
2. REMOVE ACCUMULATED SEDIMENT FROM BALES WHEN IT REACHES 1/2 THE HEIGHT OF THE BARRIER.

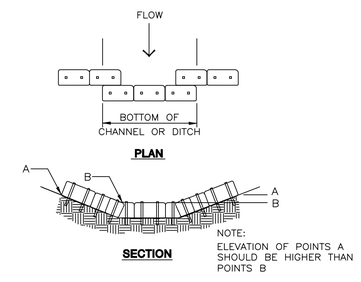

HAY BALE CHECK DAM
NOT TO SCALE

1. EXCAVATE 4" DEEP TRENCH FOR LENGTH OF BALES.
2. PLACE AND STAKE BALES. TWO (2) STAKES PER BALE.
3. WEDGE LOOSE STRAW BETWEEN BALES.
4. BACKFILL AND COMPACT THE EXCAVATED SOIL ON UPHILL SIDE OF BARRIER.

1. INSPECT BALES AFTER EACH STORM EVENT.
2. REMOVE ACCUMULATED SEDIMENT FROM BALES WHEN IT REACHES 1/2 THE HEIGHT OF THE BARRIER.

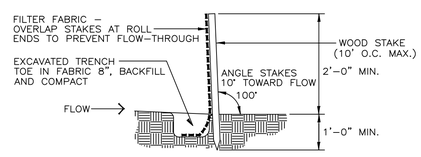

SECTION

FILTER FABRIC FENCE
NOT TO SCALE

1. INSPECT BARRIER AFTER EACH STORM EVENT AND DAILY DURING PROLONGED RAINFALL.
2. REMOVE SEDIMENT WHEN IT REACHES APPROXIMATELY ONE-HALF THE BARRIER HEIGHT.

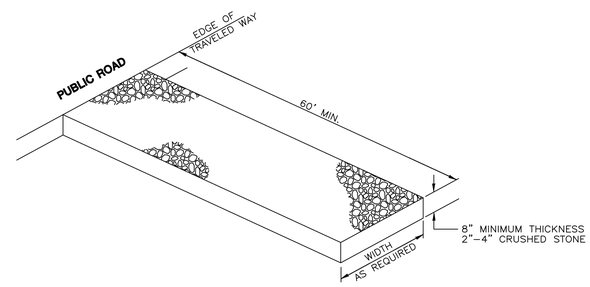

CONSTRUCTION ENTRANCE/ANTI-TRACKING PAD
NOT TO SCALE

1. CLEAR AND GRUB AREA BEFORE PLACEMENT OF STONE. A GEOTEXTILE LAYER MAY BE USED TO STABILIZE POOR SUBGRADE SOILS.
2. PROVIDE FOR POSITIVE DRAINAGE OF SEDIMENT LADEN WATER THROUGH AN APPROVED SEDIMENT FILTER OR TO A SEDIMENT BASIN.
3. MAINTAIN ENTRANCE SO AS TO PREVENT TRACKING OR FLOWING OF SEDIMENT ONTO PUBLIC ROAD.
4. SHOULD SITE CONDITIONS BE SUCH THAT SOIL CANNOT BE REMOVED BY VEHICLES TRAVELING OVER THE PAD, THE TIRES OF VEHICLES MAY HAVE TO BE WASHED PRIOR TO VEHICLES ENTERING THE PUBLIC ROAD. ALL WASH WATER SHALL BE DIRECTED THROUGH AN APPROVED SEDIMENT FILTER OR TO A SEDIMENT BASIN.

Lothrop

Lothrop Associates LLP Architects
100 Pearl Street
14th Floor
Hartford, Connecticut 06103
860-249-7251

White Plains Red Bank Hartford Rochester

STRUCTURAL ENGINEER:

Cmars Engineering, LLC
STRUCTURES FOUNDATIONS INVESTIGATIONS
56 Orchard Hill Road, Branford, CT 06405
Tel 203-483-8789 Fax 203-483-8285

SURVEYOR:

CRISCUOLO ENGINEERING LLC

ENVIRONMENTAL ENGINEER:

FUSS & O'NEILL
EnvironScience, LLC
146 HARTFORD ROAD
MANCHESTER, CONNECTICUT 06040
860-646-2469
www.fuss-o'neill.com

ISSUE NO.	ISSUE DATE	DESCRIPTION
1	26 MARCH 2015	ISSUED FOR BID

State Of Connecticut
Department Of Housing
505 Hudson Street
Hartford, Connecticut 06106

Construction Of
New Residence
for
Susan Ranalli
Application No. 5040
105 Minor Road
(AKA 30 Minor Road)
East Haven, Connecticut 06512

SITE PLAN AND ZONING DATA

PROJECT NO.: 1524-28 | SCALE: AS NOTED

DRAWING NO.:

G-002

FINISH SCHEDULE

FLOOR — BASE
WALLS — CEILING

0. NONE.
1. EXPOSED CONCRETE.
2. HARDWOOD FLOOR.
3. CARPET – BY OWNER
4. UNGLAZED CERAMIC TILE
5. WOOD BASE
6. GLAZED CERAMIC TILE SANITARY COVE
7. NOT USED
8. GLASS MAT FACED GYPSUM WALL BOARD
9. GYPSUM WALL BOARD PRIMED AND PAINTED FIN.
10. WATER RESISTANT GYPSUM WALL BOARD
11. 48" HIGH 4"x4" GLAZED CERAMIC WALL TILE WAINSCOT. PROVIDE 4"x4" GLAZED CERAMIC WALL TILE 6'-0" WAINSCOT AROUND TUB.
12. EXPOSED PLYWOOD

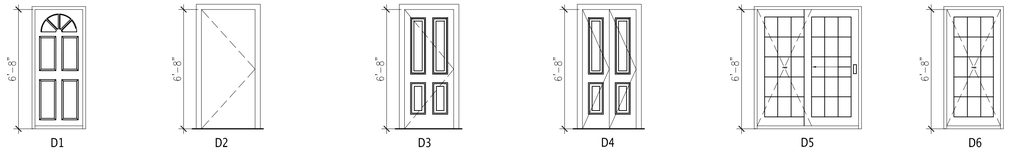

DOOR SCHEDULE

RM	DOOR NO.	DOOR SIZE	DOOR MAT'L	FRAME TYPE	DOOR TYPE	NOTES
EXTERIOR	001	3'-0" X 6'-8"	HM	2" HM	D2	EXTERIOR
EXTERIOR	002	3'-0" X 6'-8"	HM	2" HM	D1	EXTERIOR
EXTERIOR (OFF LIVING ROOM)	100	3'-0" X 6'-8"	FG.	2" WD.	D1	EXTERIOR
BEDROOM # 2	101	2'-6" X 6'-8"	WD	WD	D3	
BEDROOM # 2	101.1	(4) 1'-0" X 6'-8"	WD	WD	D4	BIFOLD
LIVING ROOM	102	(2) 3'-0" X 6'-8"	FG	2" WD.	D5	SLIDER
LIVING ROOM	102.1	3'-2" X 6'-8"	FG	2" WD	D6	FIXED
LIVING ROOM	102.2	3'-2" X 6'-8"	FG	2" WD.	D6	FIXED
LIVING ROOM	103	3'-0" X 6'-8"	WD	WD	D3	
BEDROOM # 1	104	2'-6" X 6'-8"	WD	WD	D3	
BEDROOM # 1	104.1	(4) 1'-0" X 6'-8"	WD	WD	D4	BIFOLD
BEDROOM # 1	104.2	(4) 1'-0" X 6'-8"	WD	WD	D4	BIFOLD
CLOSET	105	(2) 1'-0" X 6'-8"	WD	WD	D4	BIFOLD
LAUNDRY	106	(2) 1'-0" X 6'-8"	WD	WD	D4	BIFOLD
BATHROOM	107	3'-0" X 6'-8"	WD	WD	D3	
BATHROOM	107.1	1'-6" X 6'-8"	WD	WD	D3	
UNFINISHED ATTIC STORAGE	200	3'-0" X 6'-8"	WD	WD	D3	

ALL EXTERIOR DOORS 1-3/4" TH.

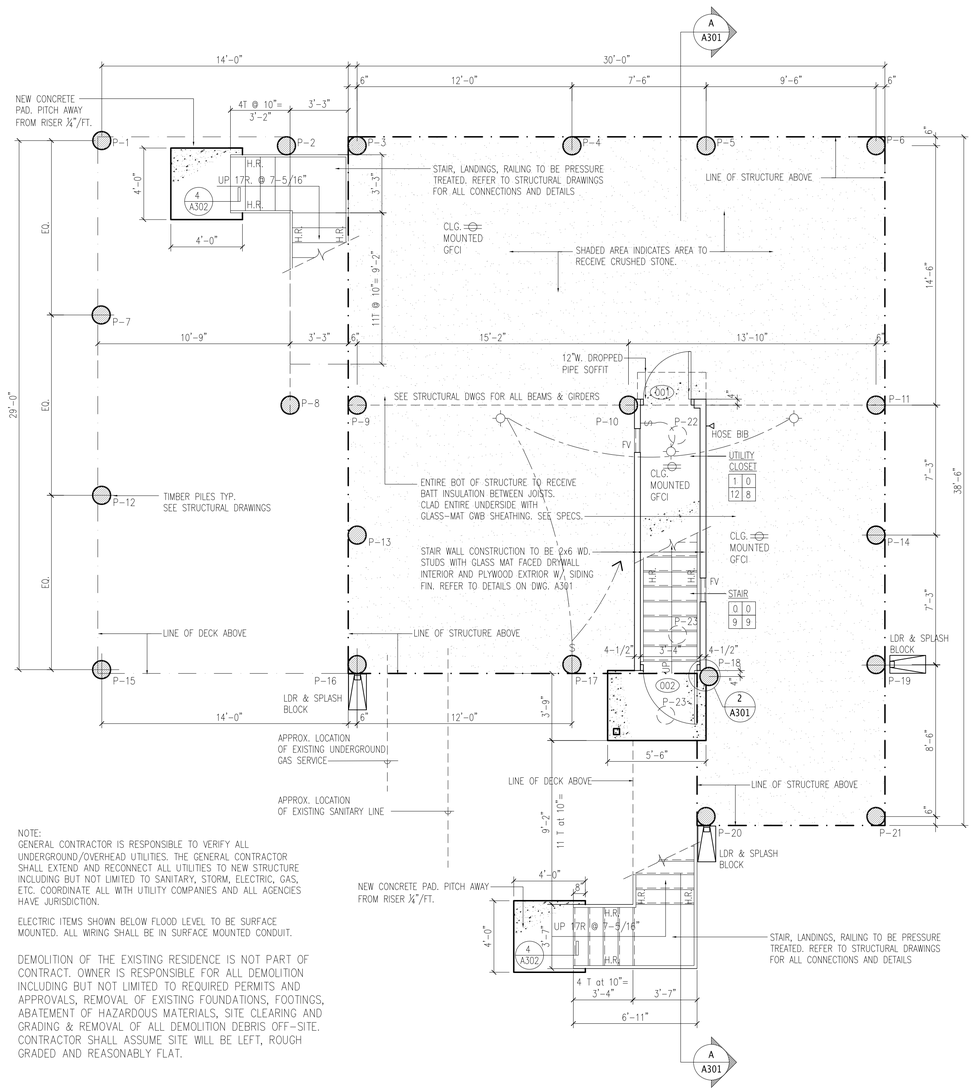

NOTE:
GENERAL CONTRACTOR IS RESPONSIBLE TO VERIFY ALL UNDERGROUND/OVERHEAD UTILITIES. THE GENERAL CONTRACTOR SHALL EXTEND AND RECONNECT ALL UTILITIES TO NEW STRUCTURE INCLUDING BUT NOT LIMITED TO SANITARY, STORM, ELECTRIC, GAS, ETC. COORDINATE ALL WITH UTILITY COMPANIES AND ALL AGENCIES HAVE JURISDICTION.

ELECTRIC ITEMS SHOWN BELOW FLOOD LEVEL TO BE SURFACE MOUNTED. ALL WIRING SHALL BE IN SURFACE MOUNTED CONDUIT.

DEMOLITION OF THE EXISTING RESIDENCE IS NOT PART OF CONTRACT. OWNER IS RESPONSIBLE FOR ALL DEMOLITION INCLUDING BUT NOT LIMITED TO REQUIRED PERMITS AND APPROVALS, REMOVAL OF EXISTING FOUNDATIONS, FOOTINGS, ABATEMENT OF HAZARDOUS MATERIALS, SITE CLEARING AND GRADING & REMOVAL OF ALL DEMOLITION DEBRIS OFF-SITE. CONTRACTOR SHALL ASSUME SITE WILL BE LEFT, ROUGH GRADED AND REASONABLY FLAT.

1 FOUNDATION PLAN
1/4" = 1'-0"

NORTH

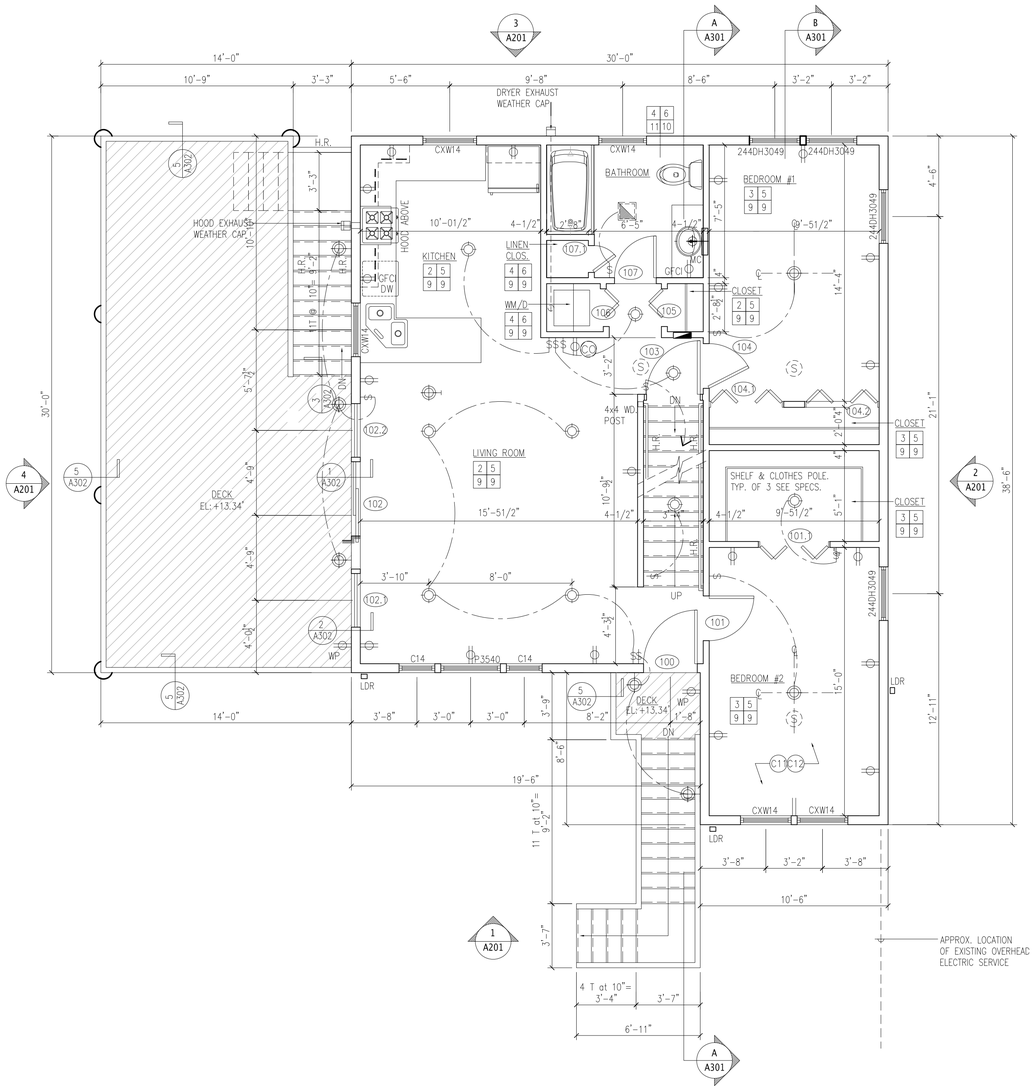

2 FIRST FLOOR PLAN
1/4" = 1'-0"

T.O. FIN. FLR. EL: 13.5'

NORTH

Lothrop

Lothrop Associates LLP Architects
100 Pearl Street
14th Floor
Hartford, Connecticut 06103
860-249-7251

White Plains Red Bank Hartford Rochester

STRUCTURAL ENGINEER:

Cmars Engineering, LLC
STRUCTURES FOUNDATIONS INVESTIGATIONS
58 Orchard Hill Road, Branford, CT 06405
Tel.203-483-8789 Fax 203-483-8285

SURVEYOR:

CRISCUOLO ENGINEERING LLC

ENVIRONMENTAL ENGINEER:

FUSS & O'NEILL
ENVIRONMENTAL, LLC
146 HARTFORD ROAD
MANCHESTER, CONNECTICUT 06040
860.646.2469
www.fando.com

ISSUE NO.	ISSUE DATE	DESCRIPTION
1	26 MARCH 2015	ISSUED FOR BID

State Of Connecticut
Department Of Housing
505 Hudson Street
Hartford, Connecticut 06106

Construction Of
New Residence
for
Susan Ranalli
Application No. 5040
105 Minor Road
(AKA 30 Minor Road)
East Haven, Connecticut 06512

FOUNDATION PLAN,
FIRST FLOOR PLAN
& NOTES

PROJECT NO.: 1524-28 | SCALE: AS NOTED

DRAWING NO.:
A-101

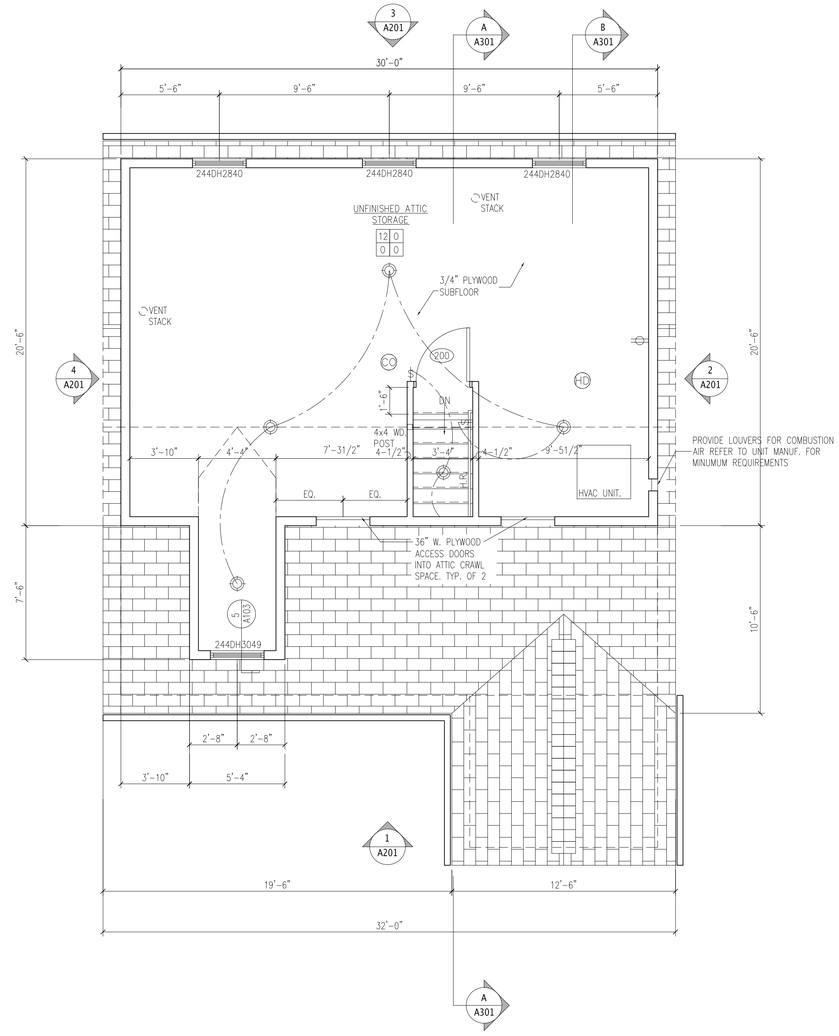

1 ATTIC STORAGE FLOOR PLAN — T.O. FIN. FLOOR EL: 22.5'
1/4" = 1'-0"

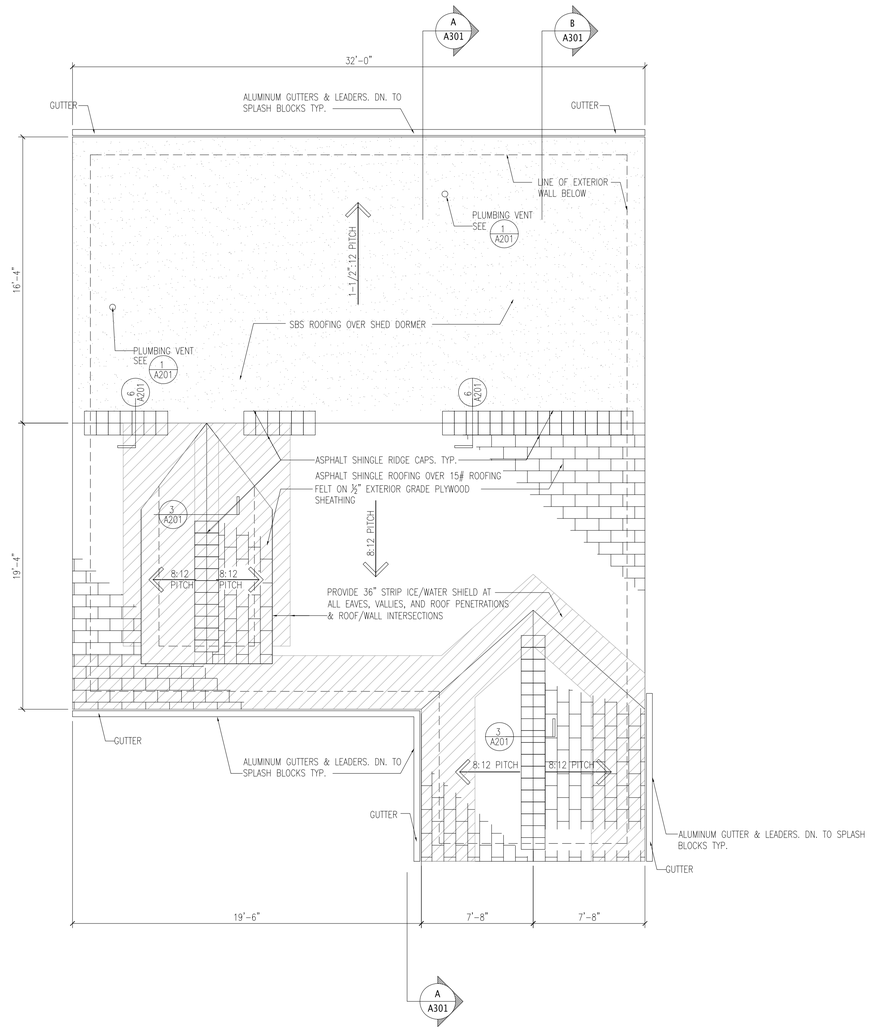

2 ROOF PLAN
1/4" = 1'-0"

Lothrop

Lothrop Associates LLP Architects
100 Pearl Street
14th Floor
Hartford, Connecticut 06103
860-249-7251

White Plains Red Bank Hartford Rochester

STRUCTURAL ENGINEER:

Cmars Engineering, LLC
STRUCTURES FOUNDATIONS INVESTIGATIONS
58 Orchard Hill Road, Branford, CT 06405
Tel 203-483-8789 Fax 203-483-8285

SURVEYOR:

CRISCUOLO ENGINEERING LLC

ENVIRONMENTAL ENGINEER:

FUSS & O'NEILL EnvironScience, LLC
146 HARTFORD ROAD
MANCHESTER, CONNECTICUT 06040
860.646.2469
www.fuss-o.com

ISSUE NO.	ISSUE DATE	DESCRIPTION
1	26 MARCH 2015	ISSUED FOR BID

State Of Connecticut
Department Of Housing
505 Hudson Street
Hartford, Connecticut 06106

Construction Of
New Residence
for
Susan Ranalli
Application No. 5040
105 Minor Road
(AKA 30 Minor Road)
East Haven, Connecticut 06512

ATTIC PLAN AND ROOF PLAN

PROJECT NO.: 1524-28
SCALE: AS NOTED

DRAWING NO.:
A-102

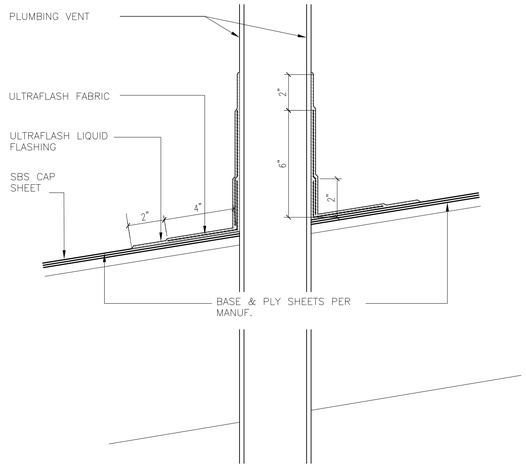

1 PLUMBING VENT FLASHING DETAIL
1-1/2" = 1'-0"

2 NOT USED

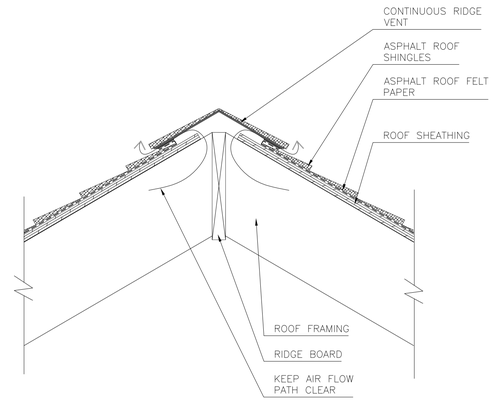

3 RIDGE VENT DETAIL
1-1/2" = 1'-0"

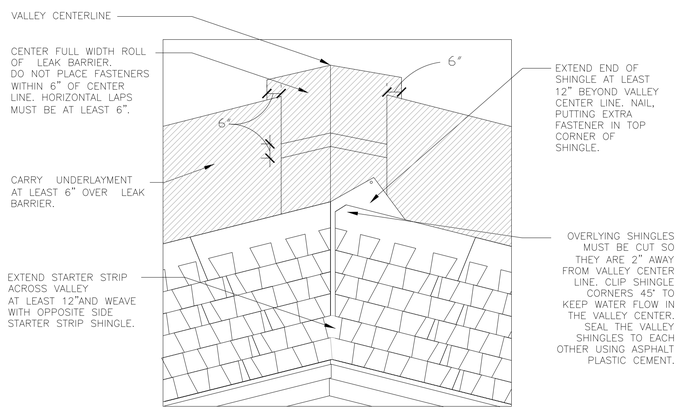

4 CLOSED VALLEY DETAIL
1-1/2" = 1'-0"

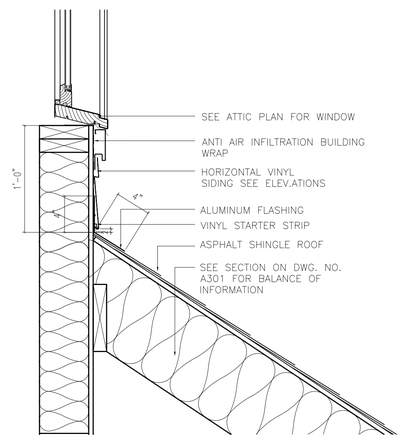

5 DETAIL at ROOF/WALL INTERSECTION
1-1/2" = 1'-0"

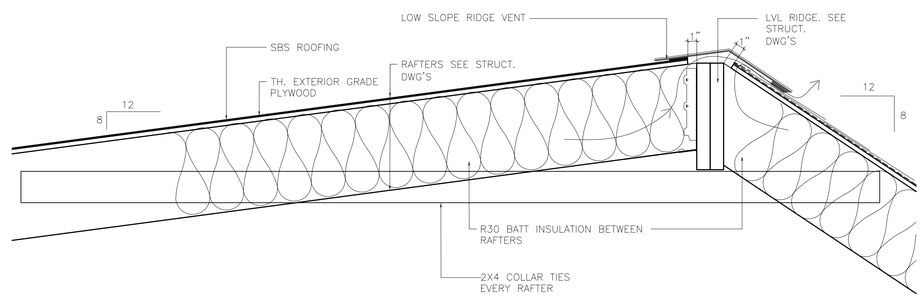

6 SBS/ASPHALT RIDGE VENT DETAIL
1-1/2" = 1'-0"

Lothrop

Lothrop Associates LLP Architects
100 Pearl Street
14th Floor
Hartford, Connecticut 06103
860-249-7251

White Plains Red Bank Hartford Rochester

STRUCTURAL ENGINEER:

Cmars Engineering, LLC
STRUCTURES FOUNDATIONS INVESTIGATIONS
58 Orchard Hill Road, Branford, CT 06405
Tel 203-483-8789 Fax 203-483-8285

SURVEYOR:

CRISCUOLO ENGINEERING LLC

ENVIRONMENTAL ENGINEER:

FUSS & O'NEILL EnvironScience, LLC
146 HARTFORD ROAD
MANCHESTER, CONNECTICUT 06040
860.646.2469
www.fuss-o.com

ISSUE NO.	ISSUE DATE	DESCRIPTION
1	26 MARCH 2015	ISSUED FOR BID

State Of Connecticut
Department Of Housing
505 Hudson Street
Hartford, Connecticut 06106

Construction Of
New Residence
for
Susan Ranalli
Application No. 5040
105 Minor Road
(AKA 30 Minor Road)
East Haven, Connecticut 06512

ROOF
DETAILS

PROJECT NO.: 1524-28
SCALE: AS NOTED

DRAWING NO.:
A-103

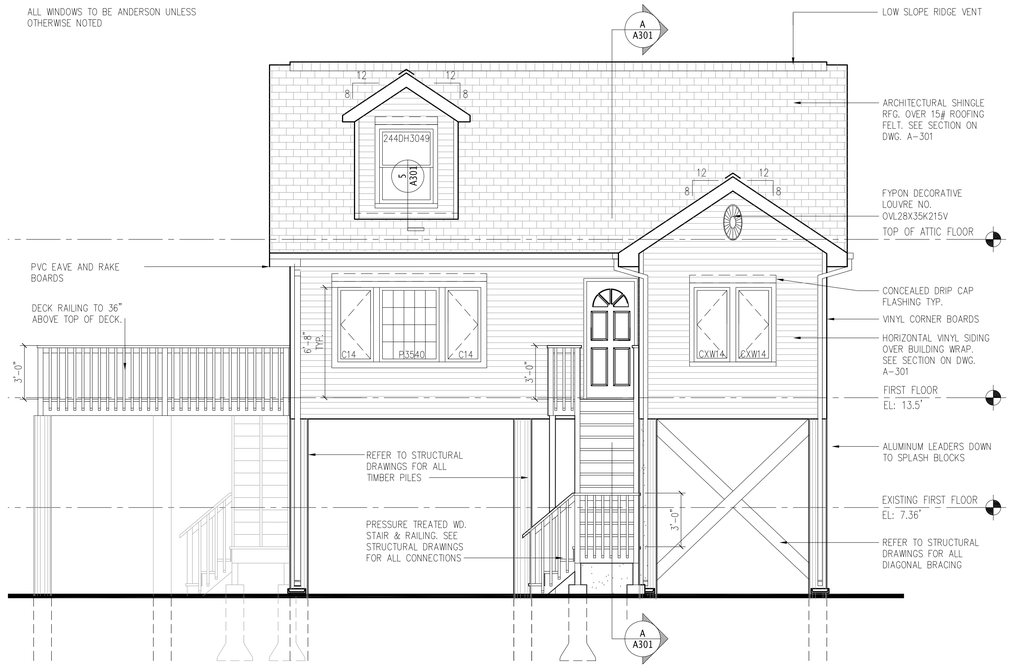

1 EAST ELEVATION
1/4" = 1'-0"

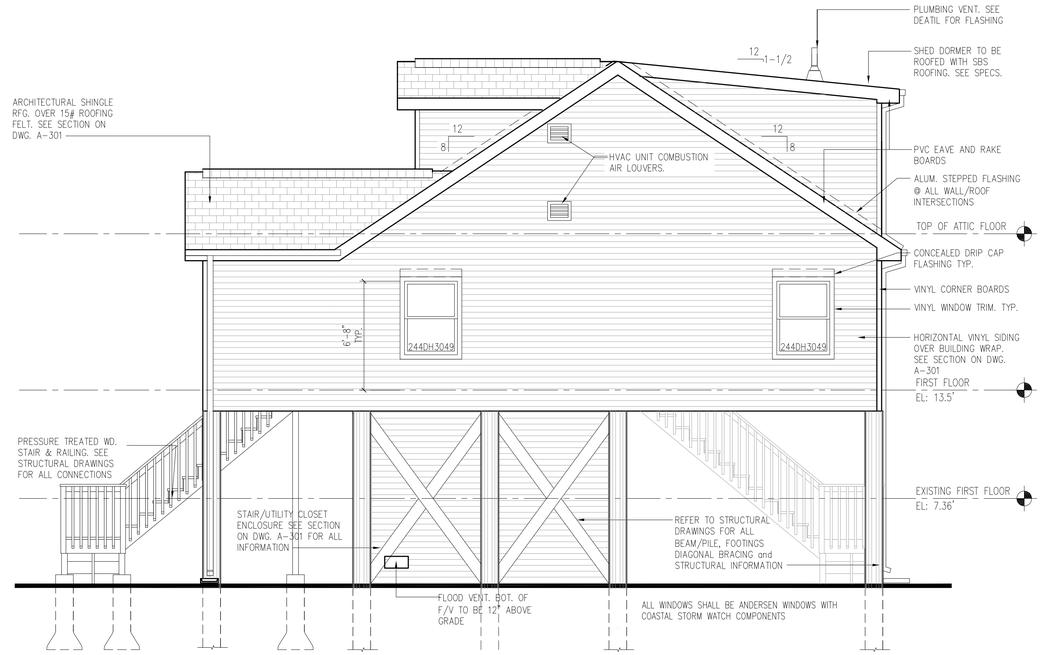

2 NORTH ELEVATION
1/4" = 1'-0"

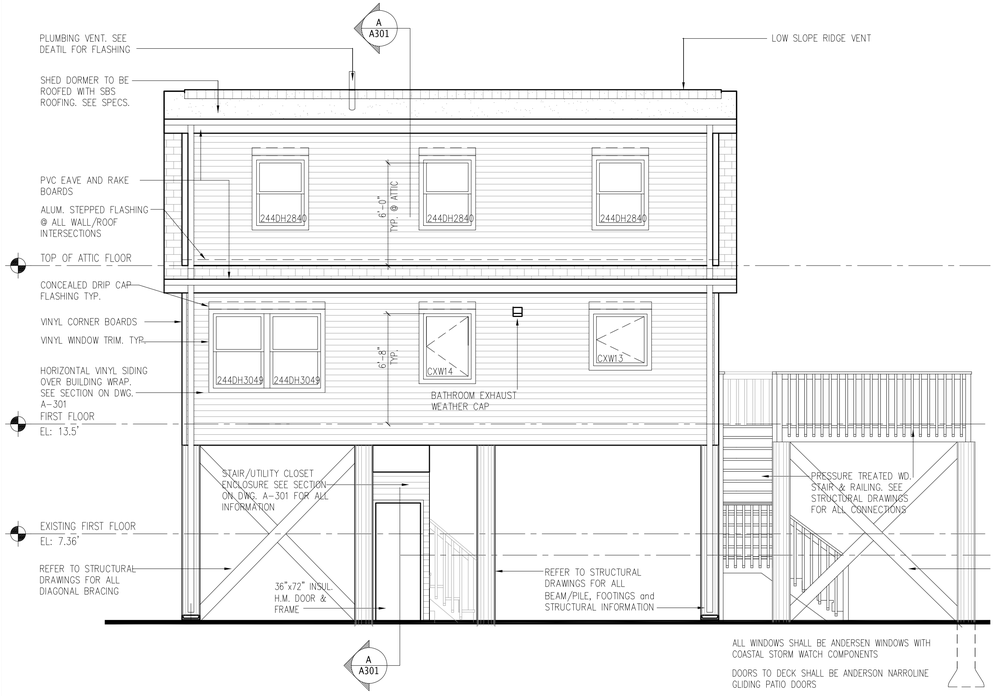

3 WEST ELEVATION
1/4" = 1'-0"

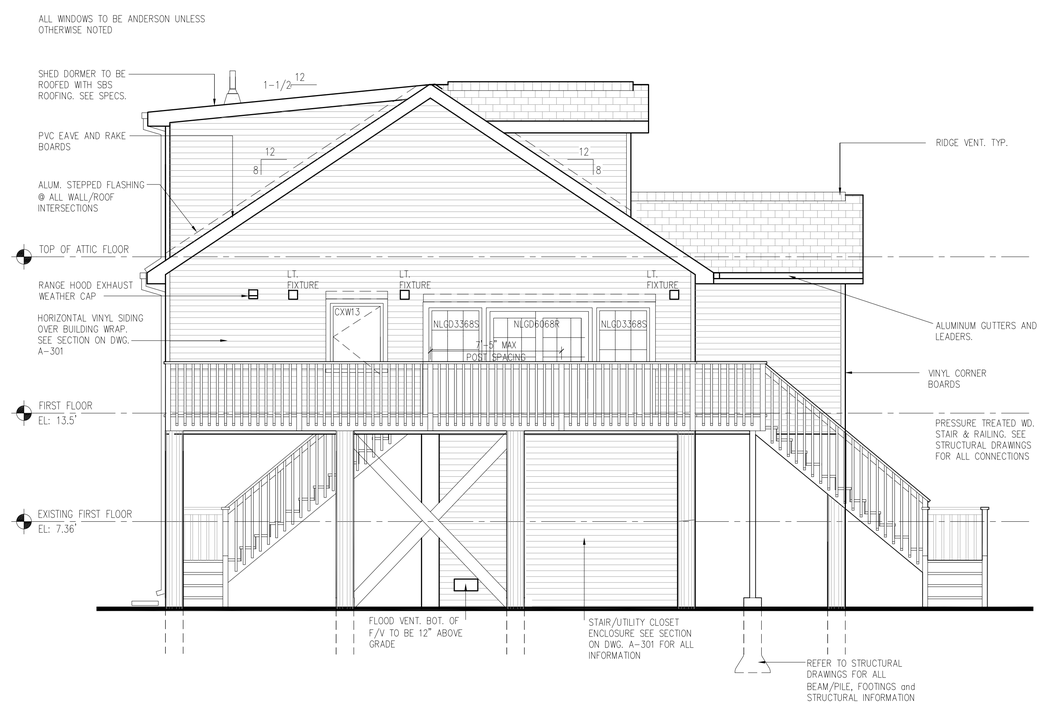

4 SOUTH ELEVATION
1/4" = 1'-0"

Lothrop

Lothrop Associates LLP Architects
100 Pearl Street
14th Floor
Hartford, Connecticut 06103
860-249-7251

White Plains Red Bank Hartford Rochester

STRUCTURAL ENGINEER:

Cmars Engineering, LLC
STRUCTURES FOUNDATIONS INVESTIGATIONS
58 Orchard Hill Road, Branford, CT 06405
Tel 203-483-8789 Fax 203-483-8285

SURVEYOR:

CRISCUOLO ENGINEERING LLC

ENVIRONMENTAL ENGINEER:

FUSS & O'NEILL ENVIRONMENTAL, LLC
146 HARTFORD ROAD
MANCHESTER, CONNECTICUT 06040
860.646.2469
www.fando.com

ISSUE NO.	ISSUE DATE	DESCRIPTION
1	26 MARCH 2015	ISSUED FOR BID

State Of Connecticut
Department Of Housing
505 Hudson Street
Hartford, Connecticut 06106

Construction Of
New Residence
for
Susan Ranalli
Application No. 5040
105 Minor Road
(AKA 30 Minor Road)
East Haven, Connecticut 06512

BUILDING ELEVATIONS

PROJECT NO.: 1524-28 | SCALE: AS NOTED

DRAWING NO.:

A-201

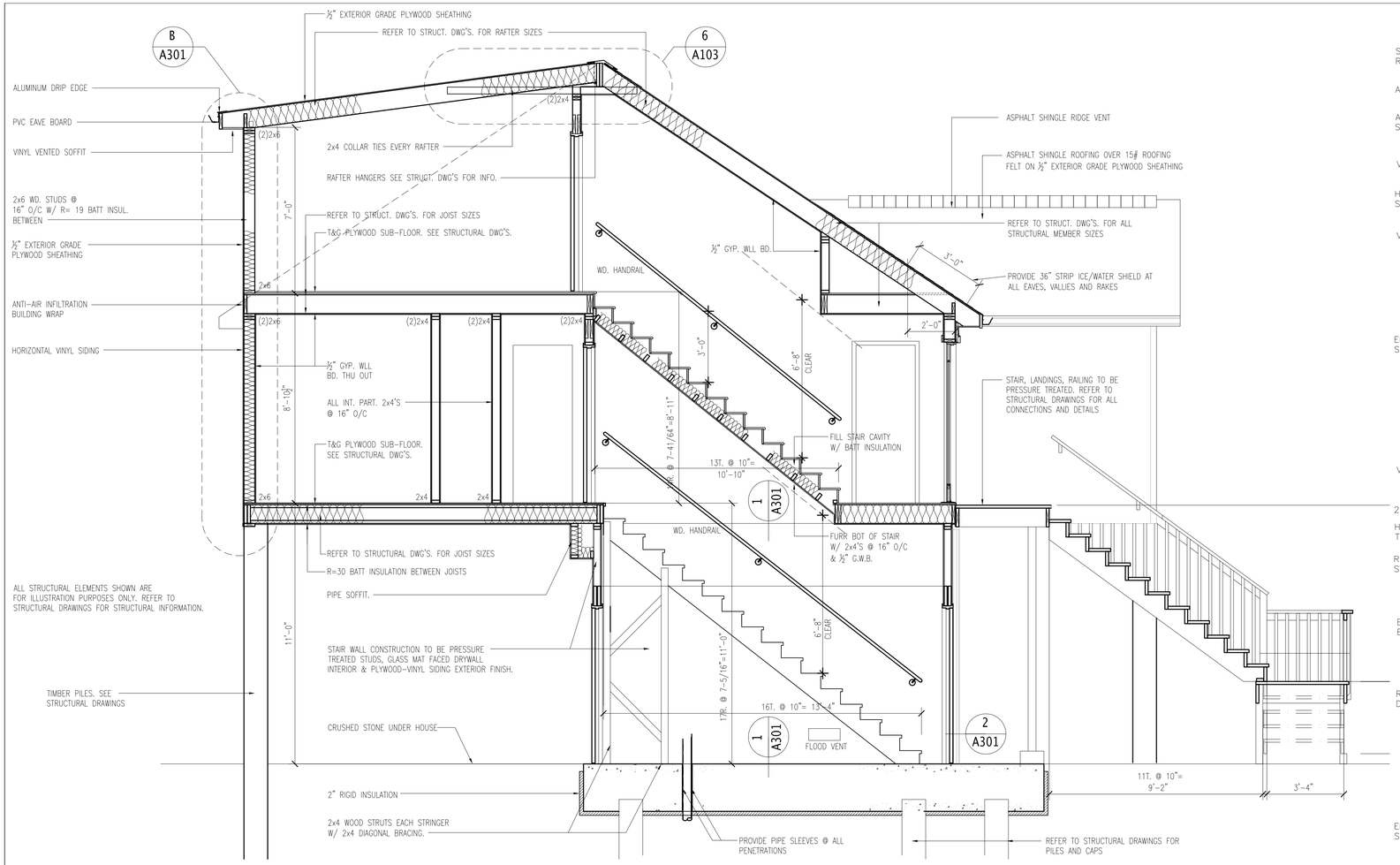

A BUILDING CROSS SECTION
3/8" = 1'-0"

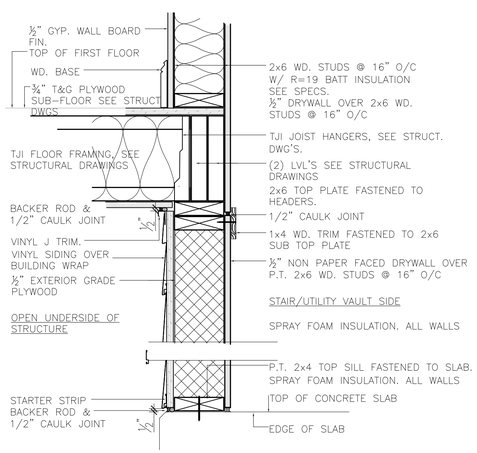

1 DETAIL
1-1/2"=1'-0"

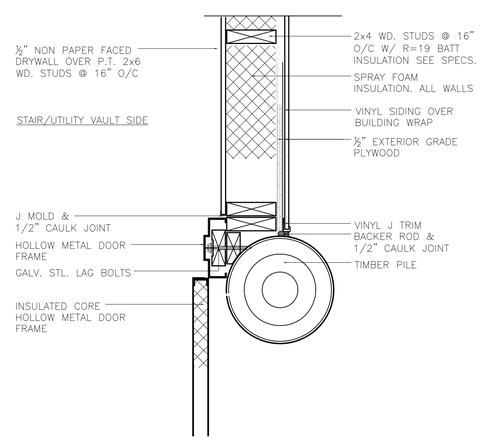

2 DETAIL
1-1/2" = 1'-0"

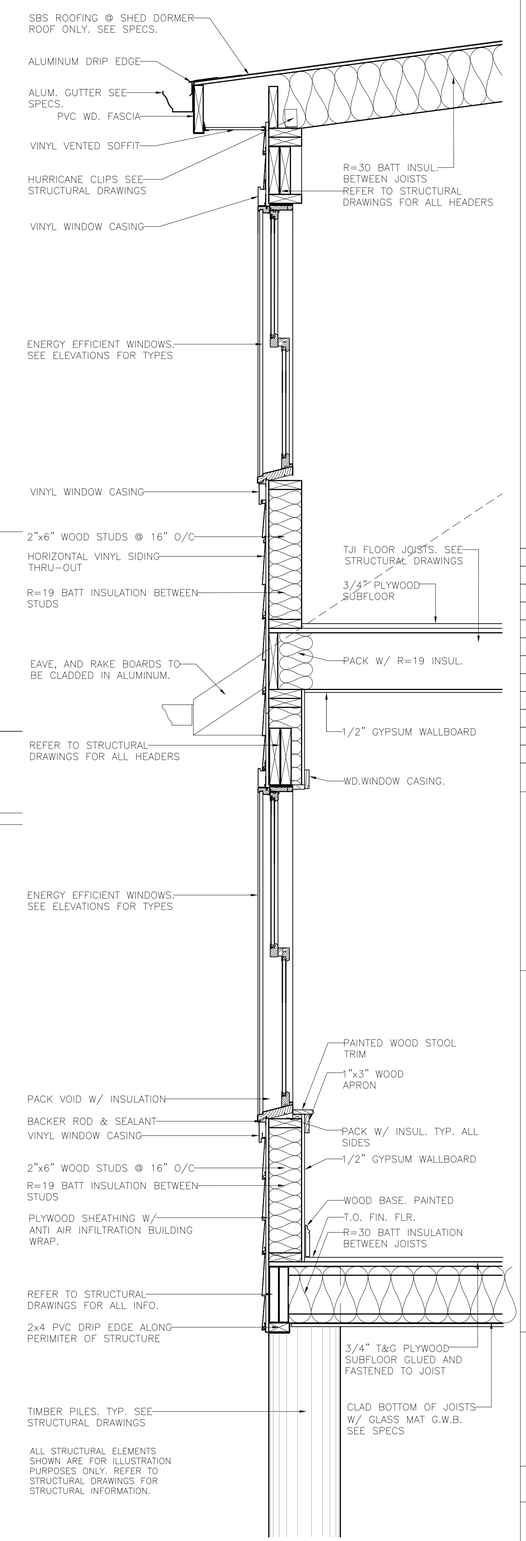

B WALL SECTION
1" = 1'-0"

Lothrop

Lothrop Associates LLP Architects
100 Pearl Street
14th Floor
Hartford, Connecticut 06103
860-249-7251

White Plains Red Bank Hartford Rochester

STRUCTURAL ENGINEER:

Cmars Engineering, LLC
STRUCTURES FOUNDATIONS INVESTIGATIONS
58 Orchard Hill Road, Branford, CT 06405
Tel 203-483-8789 Fax 203-483-8285

SURVEYOR:

CRISCUOLO ENGINEERING LLC

ENVIRONMENTAL ENGINEER:

FUSS & O'NEILL ENVIRONMENTAL, LLC
146 HARTFORD ROAD
MANCHESTER, CONNECTICUT 06040
860.646.2469
www.fuss&oneill.com

ISSUE NO.	ISSUE DATE	DESCRIPTION
1	26 MARCH 2015	ISSUED FOR BID

State Of Connecticut
Department Of Housing
505 Hudson Street
Hartford, Connecticut 06106

Construction Of
New Residence
for
Susan Ranalli
Application No. 5040
105 Minor Road
(AKA 30 Minor Road)
East Haven, Connecticut 06512

BUILDING SECTION WALL SECTION & DETAILS

PROJECT NO.: 1524-28 | SCALE: AS NOTED

DRAWING NO.:

A-301

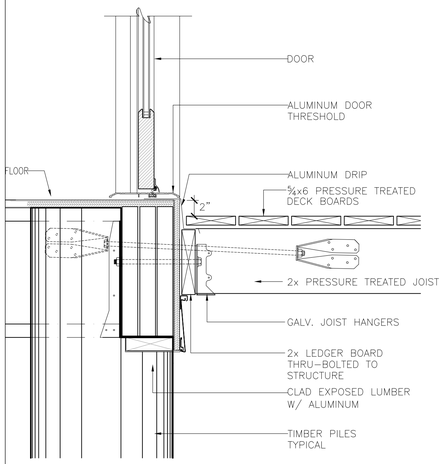

1 DECK DETAIL AT TYPICAL DOOR THRESHOLD
1-1/2" = 1'-0"

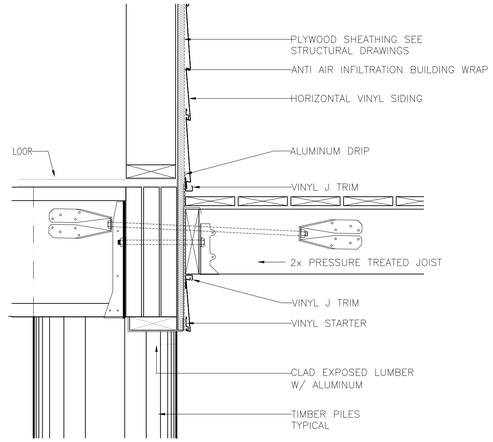

2 DECK- BUILDING STRUCTURE CONNECTION DETAIL
1-1/2" = 1'-0"

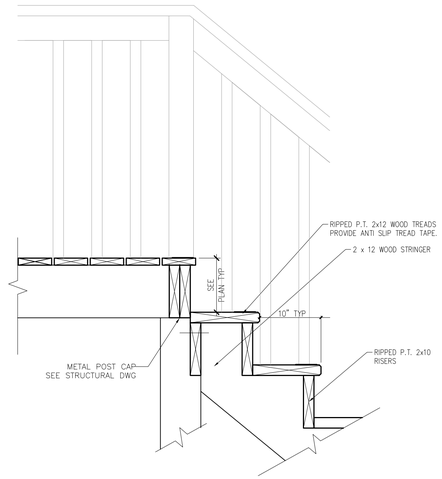

3 DECK- STAIR DETAIL
1-1/2" = 1'-0"

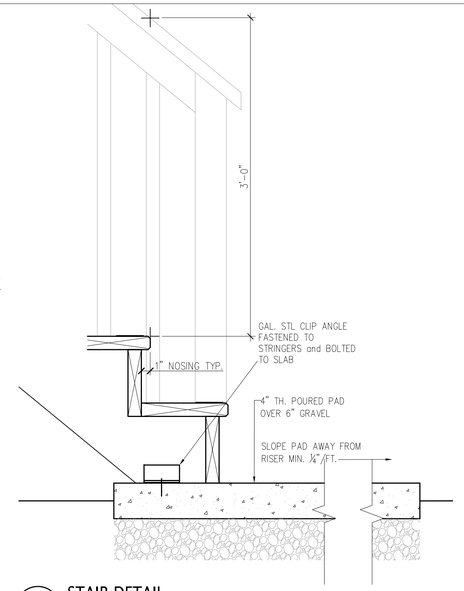

4 STAIR DETAIL
1-1/2" = 1'-0"

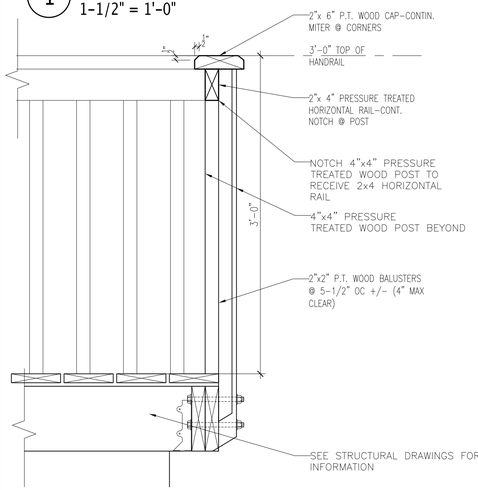

5 DECK RAILING DETAIL
1-1/2" = 1'-0"

Lothrop

Lothrop Associates LLP Architects
100 Pearl Street
14th Floor
Hartford, Connecticut 06103
860-249-7251

White Plains Red Bank Hartford Rochester

STRUCTURAL ENGINEER:

Cmars Engineering, LLC
STRUCTURES FOUNDATIONS INVESTIGATIONS
58 Orchard Hill Road, Branford, CT 06405
Tel 203-483-8789 Fax 203-483-8285

SURVEYOR:

CRISCUOLO ENGINEERING LLC

ENVIRONMENTAL ENGINEER:

FUSS & O'NEILL ENVIRONMENTAL, LLC
146 HARTFORD ROAD
MANCHESTER, CONNECTICUT 06040
860.646.2469
www.fuss&oneill.com

ISSUE NO.	ISSUE DATE	DESCRIPTION
1	26 MARCH 2015	ISSUED FOR BID

State Of Connecticut
Department Of Housing
505 Hudson Street
Hartford, Connecticut 06106

Construction Of
New Residence
for
Susan Ranalli
Application No. 5040
105 Minor Road
(AKA 30 Minor Road)
East Haven, Connecticut 06512

MISCELLANEOUS DETAILS

PROJECT NO.: 1524-28
SCALE: AS NOTED

DRAWING NO.:
A-302

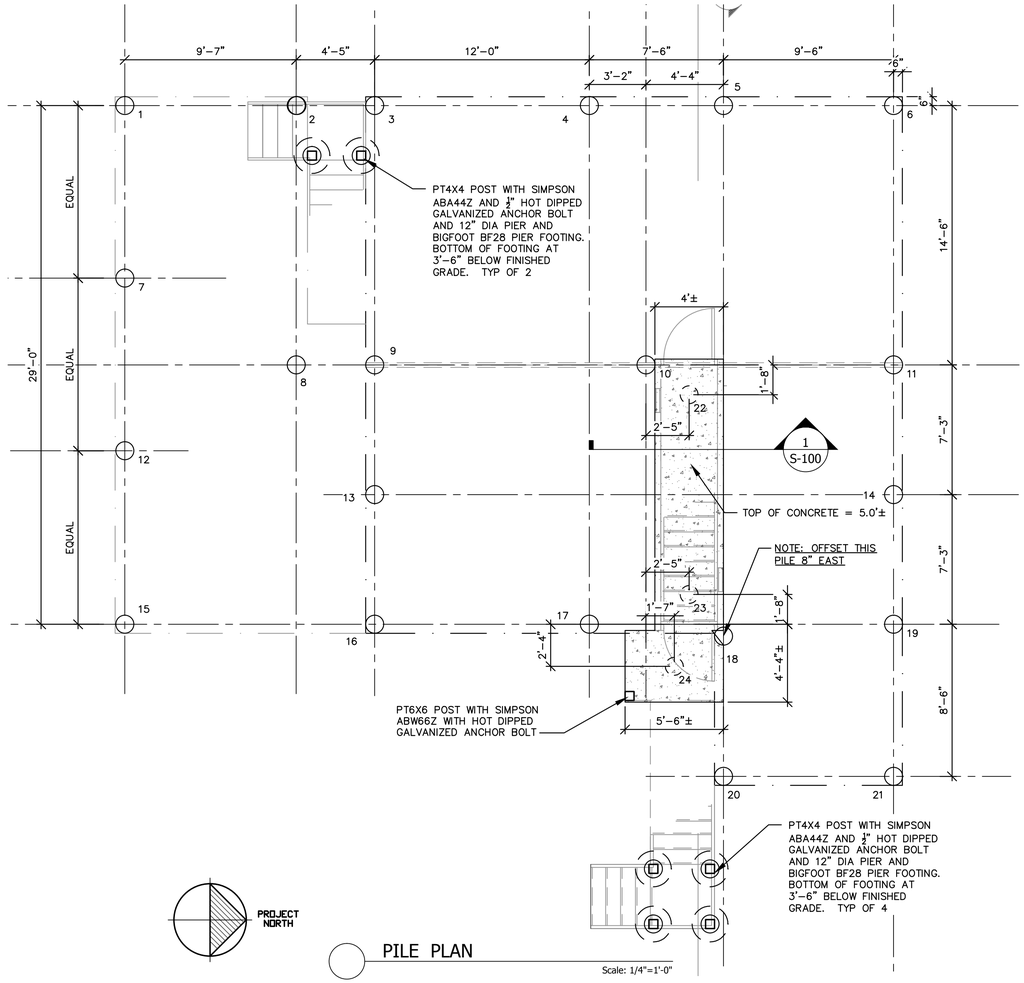

PILE PLAN

Scale: 1/4"=1'-0"

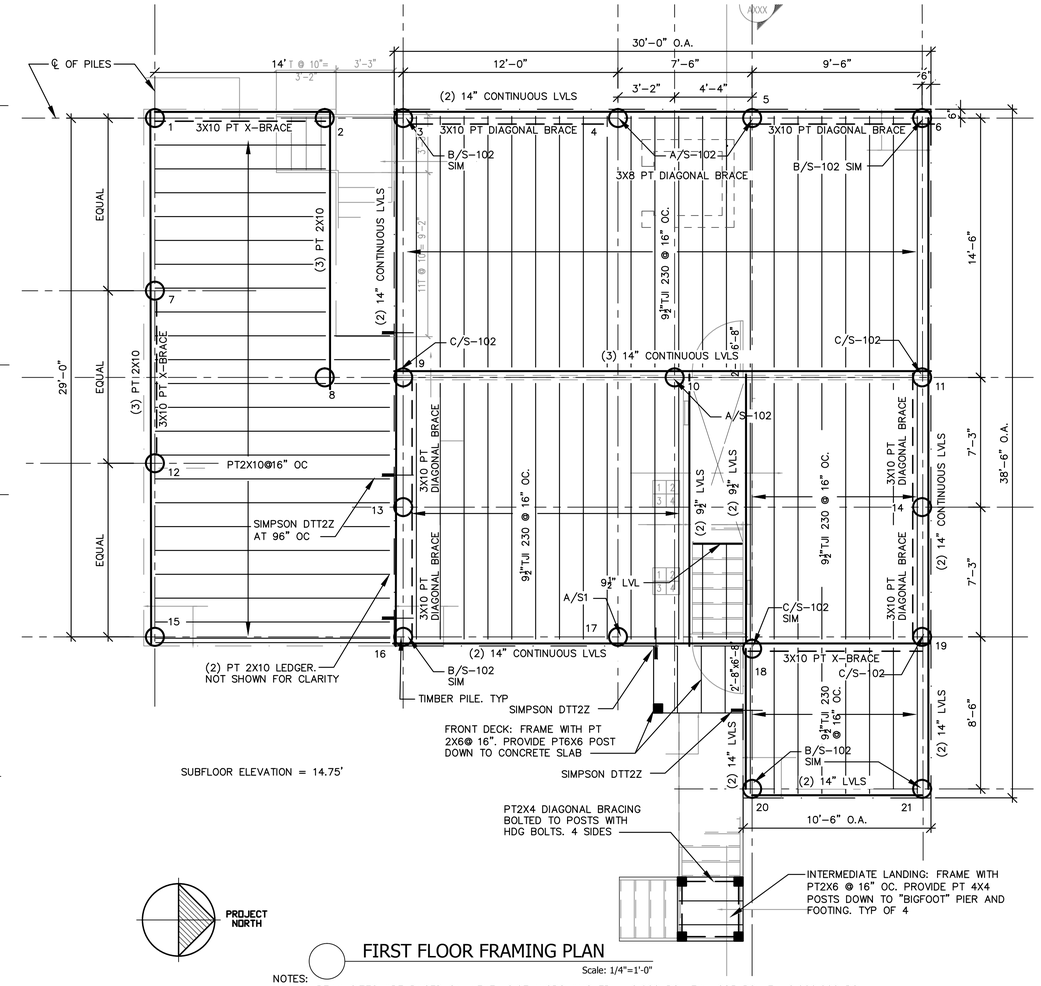

FIRST FLOOR FRAMING PLAN

Scale: 1/4"=1'-0"

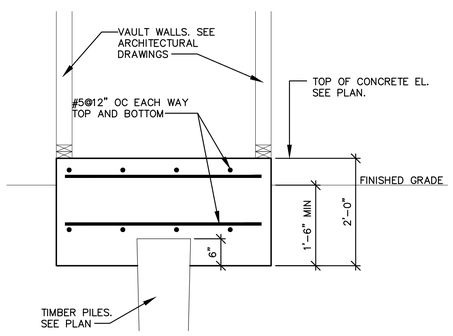

1 SECTION AT PLUMBING VAULT

Scale: 3/4"=1'-0"

PILE GENERAL NOTES AND SPECIFICATIONS

1. REFER TO SECTION 316219– TIMBER PILES FOR THE COMPLETE REQUIREMENTS. THE FOLLOWING NOTES ARE FOR REFERENCE ONLY.
2. UNLESS OTHERWISE NOTED, TYPICAL INSTALLED PILE CAPACITY REQUIRED IS 15 TONS (ALLOWABLE LOAD) 30 TONS (ULTIMATE LOAD).
3. THE PILE INSTALLATION SHALL COMPLY WITH SECTION 1809 OF THE BUILDING CODE.
4. REVIEW THE SOIL BORING LOGS. TAKE ADDITIONAL BORINGS, IF REQUIRED, AT CONTRACTORS EXPENSE.
5. PILES SHALL BE DRIVEN THROUGH ANY ORGANIC LAYERS TO REFUSAL OR UNTIL THE REQUIRED CAPACITY IS ACHIEVED.
6. ESTABLISH LINES, GRADES, CUTOFF AND PILE TIP ELEVATIONS.
7. ROUND TIMBER PILES SHALL BE TAPERED CLASS B (12" BUTT) PRESERVATIVE TREATED SOUTHERN PINE. PILES SHALL BE TREATED IN ACCORDANCE WITH THE AMERICAN WOOD PRESERVERS ASSOCIATION COMPATIBLE WITH THE APPLICATION FOR THIS PROJECT. ALL FIELD CUTS SHALL BE PRESERVATIVE TREATED IN THE FIELD IN ACCORDANCE WITH THE PRESERVATIVE MANUFACTURER'S INSTRUCTIONS.
8. PILE TIPS SHALL PENETRATE TO A MINIMUM DEPTH OF 12 FEET BELOW EXISTING GRADE. AFTER THE DRIVEN PILE TIPS REACH THE MINIMUM DEPTH THEY SHALL BE DRIVEN TO BEARING OR INSTALLED CAPACITY USING A DYNAMIC PILE FORMULA SUCH AS THE ENR EQUATION TO DETERMINE THE ULTIMATE AND ALLOWABLE PILE LOAD CAPACITY.
9. THE PILE INSTALLER SHALL DETERMINE THE LENGTHS REQUIRED PRIOR TO ORDERING MATERIALS.
10. INSTALLATION SHALL BE MONITORED BY A PROFESSIONAL ENGINEER EXPERIENCED WITH PILES. PILE DRIVING LOGS SHALL BE SUBMITTED TO THE BUILDING DEPARTMENT.
11. PROVIDE A PLAN WITH PILE DESIGNATIONS FOR REFERENCE.
12. THE PILE DRIVING LOG SHALL RECORD:
    - 12.1. PROJECT NAME AND DATE OF DRIVING
    - 12.2. NAME OF CONTRACTOR
    - 12.3. PILE SPECIES
    - 12.4. PILE DESIGNATION
    - 12.5. GROUND ELEVATION
    - 12.6. FINAL TIP AND CUTOFF ELEVATIONS
    - 12.7. RECORDS OF RE–DRIVING
    - 12.8. TYPE, MAKE, MODEL AND RATED ENERGY OF HAMMER
    - 12.9. WEIGHT AND STROKE OF HAMMER
    - 12.10. TYPE OF PILE–DRIVING CAP USED.
    - 12.11. CUSHION MATERIAL AND THICKNESS
    - 12.12. NUMBER OF BLOW COUNTS PER FOOT FOR THE ENTIRE LENGTH AND BLOWS FOR THE FINAL 6 INCHES OF PENETRATION.
    - 12.13. PILE DEVIATIONS FROM LOCATION AND PLUMB
    - 12.14. PRE–BORING, JETTING OR SPECIAL PROCEDURES USED
    - 12.15. UNUSUAL OCCURRENCES DURING PILE DRIVING.
13. ALL PILE INSTALLATION OPERATIONS SHALL BE SUPERVISED BY A PROFESSIONAL ENGINEER LICENSED IN THE STATE OF CONNECTICUT AND EXPERIENCED WITH PILE DRIVING (AKA "PILE ENGINEER"). ARCHITECT WILL HIRE THE PROFESSIONAL ENGINEER.
14. FOR ESTIMATING PURPOSES ALL PILES SHALL BE INSTALLED TO A DEPTH OF 20 FEET BELOW THE EXISTING GRADE IN ACCORDANCE WITH THE PILE SPECIFICATIONS AND THESE NOTES. THE EXACT EMBEDMENT LENGTHS SHALL BE VERIFIED AND RECORDED IN THE FIELD BY THE PILE ENGINEER. FINAL PAYMENT FOR INSTALLATION LENGTHS SHALL BE DETERMINED USING A CONTRACT UNIT PRICE.

NOTES:

1. LVL BEAM SIZES ARE BASED ON iLEVEL 2.0E MICROLAMS FB= 2,600 PSI, FV= 285 PSI, E= 2,000,000 PSI. OTHER SUITABLE PRODUCTS MAY BE USED IF THEY MEET THE STRENGTH, STIFFNESS AND DURABILITY PROPERTIES OF THE SPECIFIED PRODUCT.
2. FIELD APPLY PRESERVATIVE TO ALL BEAM CUTS AND BOLT HOLES AS RECOMMENDED BY THE MANUFACTURER.
3. REFER TO SURVEY FOR LOCAL BENCH MARK.
4. THE BOTTOM OF THE LOWEST HORIZONTAL MEMBER OF THE HOUSE AND DECK =13.5'.
5. ALL BEAMS ARE FLUSH FRAMED WITH THE JOISTS. INSTALL JOIST HANGERS COMPATIBLE WITH THE JOIST SIZE UNLESS SPECIFIED.

DESIGN BASIS

A. 2009 AMENDMENT TO THE 2005 STATE OF CONNECTICUT BUILDING CODE WITH THE 2013 AMENDMENT
B. HOUSE PLAN PREPARED BY SPINDRIFT DESIGN LLC
C. SOIL BORINGS DATED 1/28/2014 BY SOILTESTING, INC.
D. PILE INSTALLED ALLOWABLE WORKING CAPACITY REQUIRED: 15 TONS.
E. DESIGN LOADS
   FIRST FLOOR LIVE LOAD: 40 PSF
   ATTIC FLOOR DESIGN LOAD: 30 PSF
   GROUND SNOW LOAD: 30 PSF
F. WIND LOADS
   BASIC WIND SPEED 3 SECOND GUST 100 MPH (EAST HAVEN)
   WIND EXPOSURE: C
G. THE HOUSE IS LOCATED IN THE COASTAL FLOOD ZONE AE–10 WITH A BASE FLOOR ELEVATION (BFE) =10.0 FEET. DESIGN FLOOD ELEVATION (DFE) = 13.5'. NO HORIZONTAL MEMBERS ARE TO BELOW THE DFE.

GENERAL NOTES

1. THE HOUSE FLOOR FRAMING IS DIAGRAMMATIC ONLY AND DOES NOT SHOW EACH PIECE OF LUMBER REQUIRED TO COMPLETE THE PROJECT. THE CONTRACTOR MUST DETERMINE THE QUANTITIES OF ALL MATERIALS REQUIRED.
2. LVL SIZES ARE BASED ON iLEVEL 2.0E MICROLAM Fb= 2,600 PSI, Fv= 285 PSI, E= 2,000,000 PSI. OTHER SUITABLE PRODUCTS MAY BE USED IF THEY MEET THE STRENGTH AND STIFFNESS PROPERTIES OF THE SPECIFIED PRODUCT.
3. ALL BOLTS, WASHERS, NUTS CONNECTION PLATES/ANGLES AND SIMPSON HARDWARE SHALL BE HOT DIP GALVANIZED. VERIFY COMPATIBILITY WITH THE PRESERVATIVE TREATED PILES.
4. PROVIDE PLATE WASHERS AT HEAD AND NUT END OF ALL BOLTS/THREADED RODS. REINFORCEMENT PLATES ARE CONSIDERED WASHERS.

TYPICAL BEARING WALL HEADERS UNLESS OTHERWISE SHOWN:

EXTERIOR WALLS ROUGH OPENING 4' OR LESS– (2) 2X10
EXTERIOR WALLS ROUGH OPENING 9' OR LESS– (2) 9½" LVLS
INTERIOR WALLS ROUGH OPENING 4' OR LESS– (2) 2X10
INTERIOR WALLS ROUGH OPENING 9' OR LESS– (2) 9½" LVLS

Lothrop

Lothrop Associates LLP Architects
100 Pearl Street
14th Floor
Hartford, Connecticut 06103
860-249-7251

White Plains Red Bank Hartford Rochester

STRUCTURAL ENGINEER:

Cmars Engineering, LLC
STRUCTURES FOUNDATIONS INVESTIGATIONS
58 Orchard Hill Road, Branford, CT 06405
Tel 203-483-8789 Fax 203-483-8285

SURVEYOR:

ENVIRONMENTAL ENGINEER:

FUSS & O'NEILL
ENVIRONMENTAL, INC.
146 HARTFORD ROAD
MANCHESTER, CONNECTICUT 06040
860.646.2469
www.fando.com

ISSUE NO.	ISSUE DATE	DESCRIPTION
1	26 MARCH 2015	ISSUED FOR BID

State Of Connecticut
Department Of Housing
505 Hudson Street
Hartford, Connecticut 06106
Demolition & Hazardous Material
Abatement Of Existing Residence
And Construction Of
New Residence
for
Susan Ranalli
Application No. 5040
105 Minor Road
(AKA 30 Minor Road)
East Haven, Connecticut 06512

PILE PLAN AND FIRST FLOOR FRAMING PLAN

PROJECT NO.: 1524-28 | SCALE: AS NOTED

DRAWING NO.:

S-100

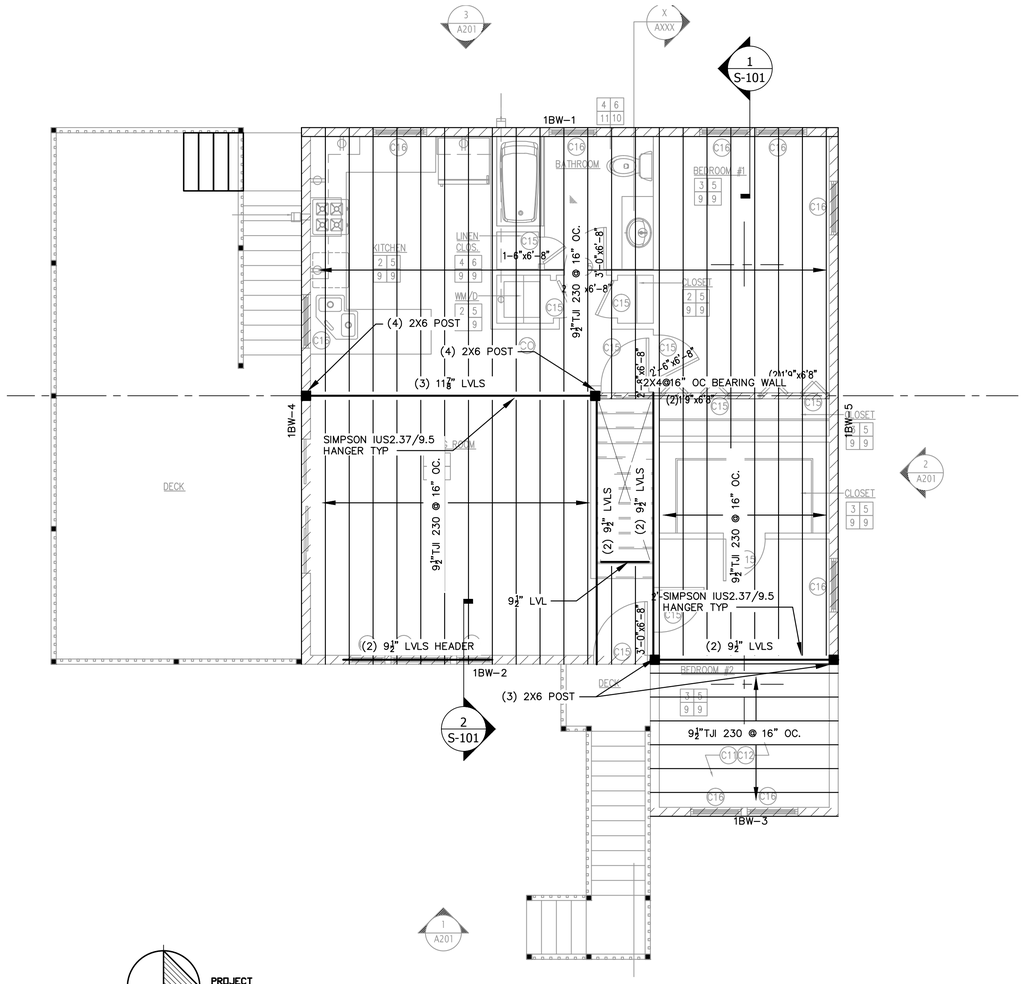

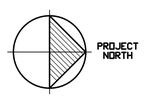

ATTIC FLOOR FRAMING PLAN

Scale: 1/4"=1'-0"

NOTES:
1. FLOOR CONSTRUCTION: 3/4" TONGUE AND GROOVED SHEATHING GLUED AND NAILED TO I-JOISTS AND LVL BEAMS.
2. DESIGN CRITERIA IS: DEAD LOAD 15 PSF, LIVE LOAD 30 PSF, LIVE LOAD DEFLECTION = L/360
3. ALL BEAMS ARE FLUSH FRAMED WITH THE FLOOR JOISTS UNLESS NOTED "DROPPED". PROVIDE JOIST HANGERS COMPATIBLE WITH THE JOISTS BEING SUPPORTED UNLESS A HANGER IS SPECIFIED ON THE PLAN.
4. 1BW-1 DENOTES BRACED WALL. SEE BRACED WALL SCHEDULE ON S-102.

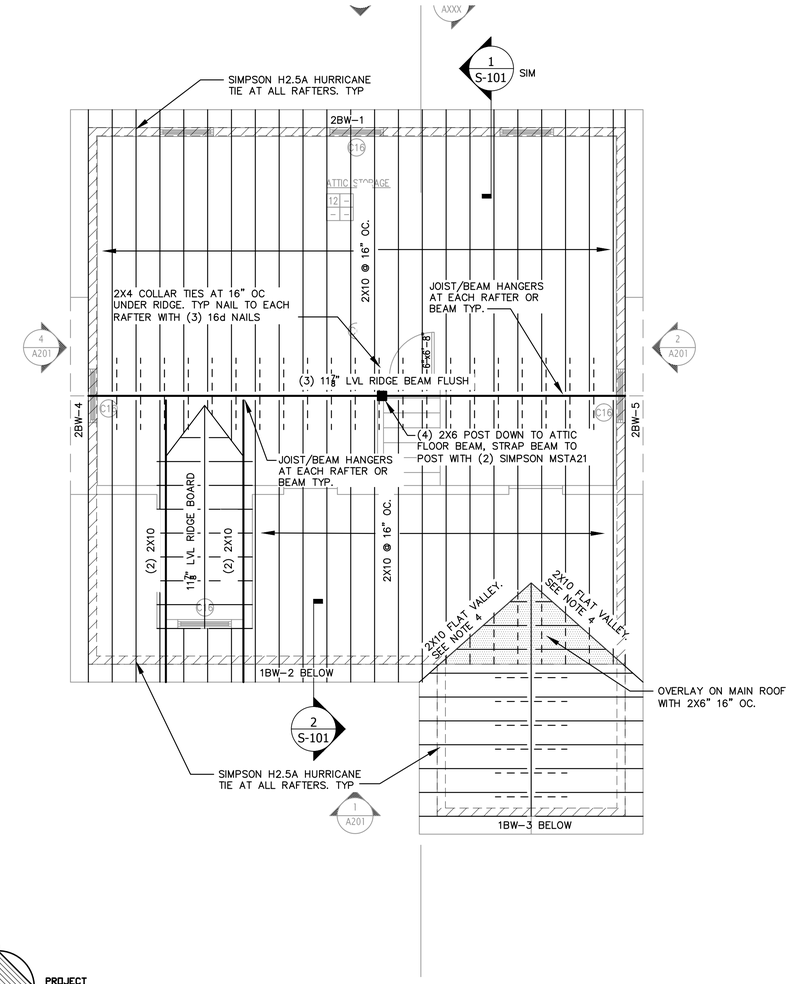

ROOF FRAMING PLAN

Scale: 1/4"=1'-0"

NOTES:
1. ROOF CONSTRUCTION: 3/4" APA RATED SHEATHING FASTENED TO SAWN LUMBER RAFTERS WITH 8d NAILS 6" OC AT PANEL EDGES AND 12" OC AT OTHER SUPPORTS.
2. DESIGN CRITERIA IS: DEAD LOAD 15 PSF, SNOW LOAD 30 PSF, TOTAL LOAD DEFLECTION = L/240
3. SAWN LUMBER FRAMING IS BASED ON DOUGLAS FIR #2.
4. FASTEN OVERLAY VALLEY PLATES TO MAIN ROOF RAFTERS WITH (2) 2 1/8" HEADLOK SCREWS. FASTEN OVERBUILD RAFTERS TO VALLEY PLATES WITH (3) 12d TOENAILS.
5. 2BW-1 DENOTES BRACED WALL. SEE BRACED WALL SCHEDULE ON S-102.

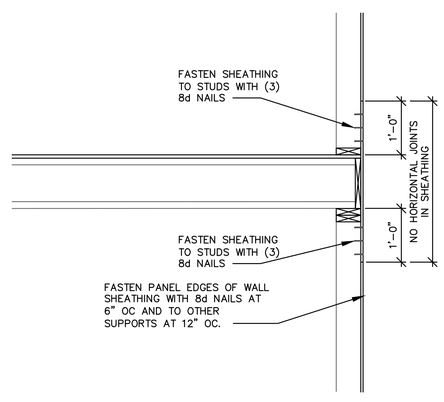

1 TYPICAL SECTION AT ATTIC FLOOR

Scale: 3/4"=1'-0"

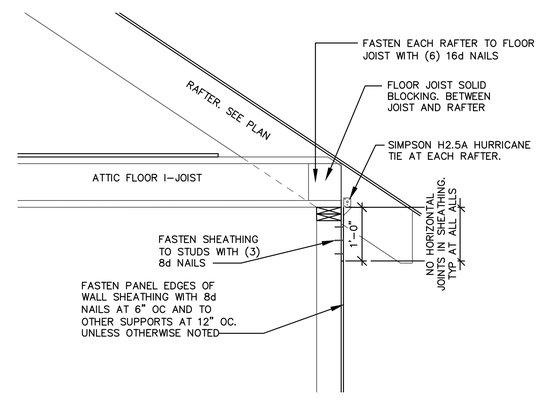

2 TYPICAL SECTION AT ATTIC FLOOR

Scale: 3/4"=1'-0"

Lothrop

Lothrop Associates LLP Architects
100 Pearl Street
14th Floor
Hartford, Connecticut 06103
860-249-7251

White Plains Red Bank Hartford Rochester

STRUCTURAL ENGINEER:

Cmars Engineering, LLC
STRUCTURES FOUNDATIONS INVESTIGATIONS
58 Orchard Hill Road, Branford, CT 06405
Tel 203-483-8789 Fax 203-483-8285

SURVEYOR:

ENVIRONMENTAL ENGINEER:

FUSS & O'NEILL
ENVIRONMENTAL, INC.
340 HARTFORD ROAD
MANCHESTER, CONNECTICUT 06040
860.646.2469
www.fando.com

ISSUE NO.	ISSUE DATE	DESCRIPTION
1	26 MARCH 2015	ISSUED FOR BID

State Of Connecticut
Department Of Housing
505 Hudson Street
Hartford, Connecticut 06106
Demolition & Hazardous Material
Abatement Of Existing Residence
And Construction Of
New Residence
for
Susan Ranalli
Application No. 5040
105 Minor Road
(AKA 30 Minor Road)
East Haven, Connecticut 06512

SECOND FLOOR AND ROOF FRAMING PLAN

PROJECT NO.: 1524-28 | SCALE: AS NOTED

DRAWING NO.:

S-101

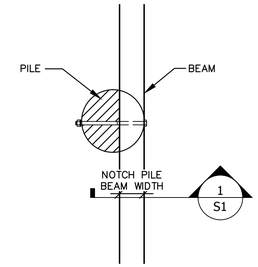

A PILE/BEAM PLAN DETAIL

Scale: 3/4"=1'-0"

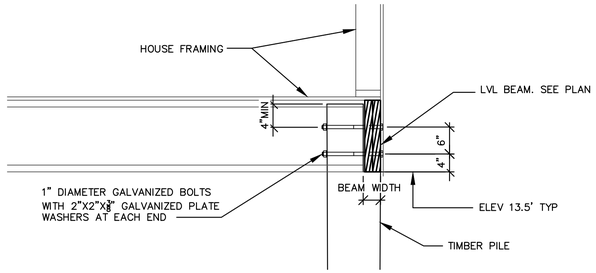

1 TYPICAL BEAM/PILE CONNECTION

Scale: 3/4"=1'-0"

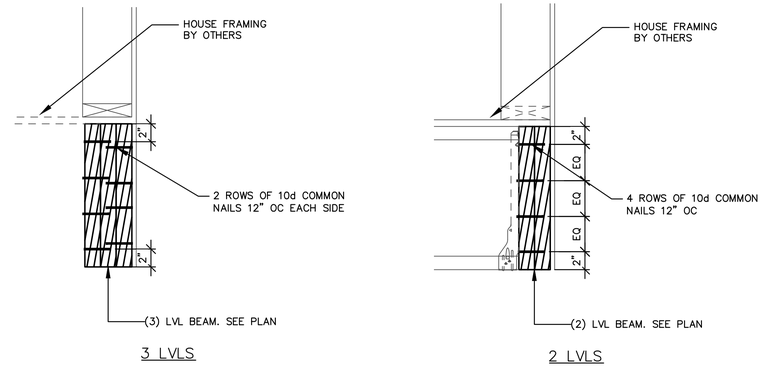

D MULTIPLE PLY CONNECTIONS

Scale: 1 1/2"=1'-0"

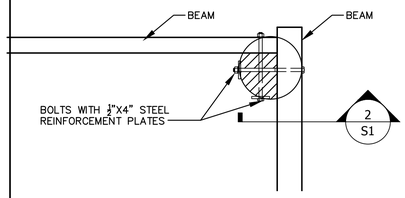

B PILE/BEAM PLAN DETAIL

Scale: 3/4"=1'-0"

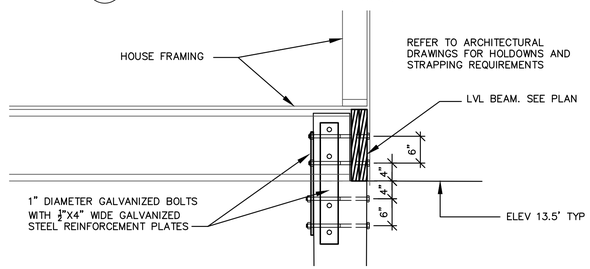

2 CORNER BEAM/PILE CONNECTION

Scale: 3/4"=1'-0"

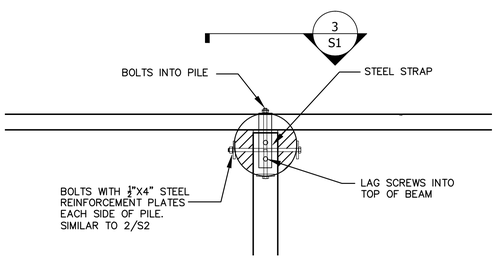

C PILE/BEAM PLAN DETAIL

Scale: 3/4"=1'-0"

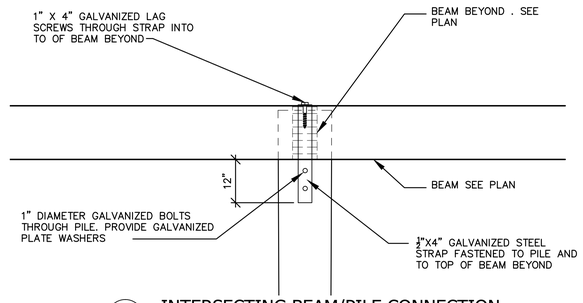

3 INTERSECTING BEAM/PILE CONNECTION

Scale: 3/4"=1'-0"

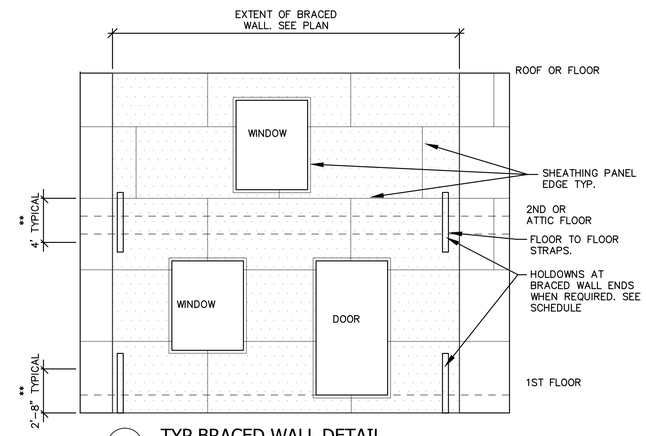

E TYP BRACED WALL DETAIL

Scale: NTS

NOTES;

1. THIS DETAIL IS FOR GENERAL INFORMATION ONLY AND DOES NOT REPRESENT ANY SPECIFIC BRACED WALL. IT IS INTENDED TO BE A GUIDE TO THE SPECIFIC BRACED WALL CONSTRUCTION REQUIREMENTS.
2. ** DENOTES DO NOT LOCATE HORIZONTAL PANEL JOINTS WITHIN THIS AREA. LOCATE HORIZONTAL JOINTS A MINIMUM OF 12" BELOW THE BOTTOM OF THE FLOOR JOISTS AND A MINIMUM OF 12" ABOVE THE FLOOR JOISTS AS APPLICABLE. THIS REQUIREMENT APPLIES TO ALL EXTERIOR WALLS, NOT ONLY TO THE BRACED WALLS

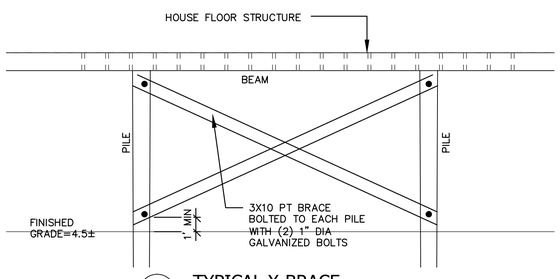

TYPICAL X-BRACE

Scale: 1/4"=1'-0"

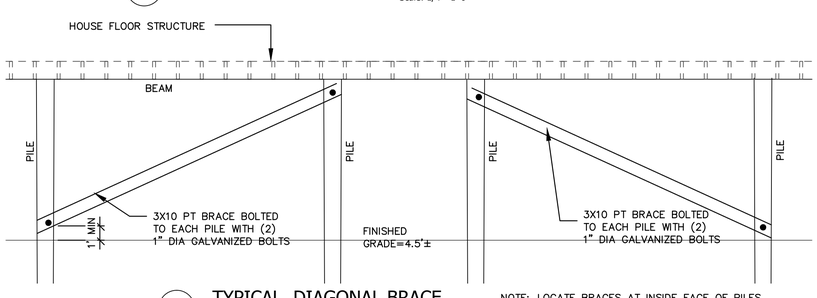

TYPICAL DIAGONAL BRACE

NOTE: LOCATE BRACES AT INSIDE FACE OF PILES

Scale: 1/4"=1'-0"

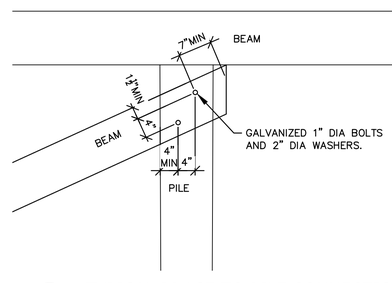

F TYPICAL BRACE TO PILE CONNECTION

Scale: 3/4"=1'-0"

BRACED WALL SCHEDULE (SEE PLANS FOR LOCATIONS)

BRACED WALL NOTES

1. BRACED WALLS HAVE BEEN ENGINEERED FOR WIND LOADS BASED ON 100 MPH (3 sec gust) AND EXPOSURE C IN ACCORDANCE WITH THE 2013 AMENDMENT TO THE CONNECTICUT STATE BUILDING CODE.
2. ALL EXTERIOR WALLS AND BRACED WALLS MUST BE SHEATHED WITH 7/16" APA RATED EXTERIOR OSB OR PLYWOOD INSTALLED LONG DIMENSION ACROSS THE WALL STUDS.
3. BRACED WALL PANEL JOINTS DO NOT NEED TO BE BACKED WITH SOLID BLOCKING.
4. UNLESS OTHERWISE INDICATED IN THE BRACED WALL SCHEDULE, ALL PANEL EDGES TO BE FASTENED TO WALL STUDS, TOP AND BOTTOM PLATES, RIM JOISTS, AND HEADERS WITH 8d NAILS AT 6" OC. PANELS TO BE FASTENED TO ALL INTERIOR FIELD SUPPORTS WITH 8d NAILS AT 12" OC.
5. WHERE NOTED INSTALL SIMPSON MSTA40 STRAP AS FLOOR-TO-FLOOR TIES. (CENTER STRAPS ON 2ND FLOOR DECK).
6. INSTALL SIMPSON MSTC48B3 PRE-BENT STRAP FROM BOTTOM OF BEAM AT EACH END OF WALL.
7. SILL PLATES OF ALL EXTERIOR WALLS AND BRACED WALLS TO BE FASTENED TO THE RIM JOISTS OR BEAMS WITH (2) 16d NAILS AT 12" OC.

MARK	SHEATHING	PANEL EDGE FASTENING	HOLDOWNS (EACH END)	COMMENTS
1BW-1	7/16"	8d NAILS AT 6" OC	NONE	
1BW-2	7/16"	8d NAILS AT 3" OC	NONE	
1BW-3	7/16"	8d NAILS AT 6" OC	MSTC48B3	SEE NOTE 6
1BW-4	7/16"	8d NAILS AT 6" OC	MSTC48B3	SEE NOTE 6
1BW-5	7/16"	8d NAILS AT 6" OC	MSTC48B3	SEE NOTE 6
2BW-1	7/16"	8d NAILS AT 6" OC	NONE	
2BW-2 NOT USED				
2BW-3 NOT USED				
2BW-4	7/16"	8d NAILS AT 3" OC	MSTA40	SEE NOTE 5
2BW-5	7/16"	8d NAILS AT 6" OC	MSTA40	SEE NOTE 5

Lothrop

Lothrop Associates LLP Architects
100 Pearl Street
14th Floor
Hartford, Connecticut 06103
860-249-7251

White Plains Red Bank Hartford Rochester

STRUCTURAL ENGINEER:

Cmars Engineering, LLC
STRUCTURES FOUNDATIONS INVESTIGATIONS
58 Orchard Hill Road, Branford, CT 06405
Tel 203-483-8789 Fax 203-483-8285

SURVEYOR:

ENVIRONMENTAL ENGINEER:

FUSS & O'NEILL
ENVIRONMENTAL, LLC
340 HARTFORD ROAD
MANCHESTER, CONNECTICUT 06040
860.646.2469
www.fando.com

ISSUE NO.	ISSUE DATE	DESCRIPTION
1	26 MARCH 2015	ISSUED FOR BID

State Of Connecticut
Department Of Housing
505 Hudson Street
Hartford, Connecticut 06106
Demolition & Hazardous Material
Abatement Of Existing Residence
And Construction Of
New Residence
for
Susan Ranalli
Application No. 5040
105 Minor Road
(AKA 30 Minor Road)
East Haven, Connecticut 06512

STRUCTURAL DETAILS

PROJECT NO.: 1524-28

SCALE: AS NOTED

DRAWING NO.:

S-102

SOILTESTING, INC.
90 DONOVAN RD.
OXFORD, CT 06478
CT (203) 262-9328
NY (914) 946-4850

CLIENT: Ms. Cory McNeill
SHEET 1 OF 1
HOLE NO. B-1
PROJECT NO. G7-9616-14
PROJECT NAME: 30 Minor Road
BORING LOCATIONS: per sketch
LOCATION: East Haven, CT
Front of house
right side front stairs
FOREMAN - DRILLER: TP/cMc
INSPECTOR:

	CASING	SAMPLER	CORE BAR
TYPE	HSA	SS	
SIZE I.D.	3 ¼"	1 3/8"	
HAMMER WT.		140#	BIT
HAMMER FALL		30"	

OFFSET
DATE START 1/20/14
DATE FINISH 1/20/14
SURFACE ELEV.
GROUND WATER ELEV.

GROUND WATER OBSERVATIONS
AT 2 FT AFTER 0 HOURS
AT __FT AFTER __HOURS

DEPTH	CASING BLOWS PER FOOT	SAMPLE NO	Type	PEN	REC	DEPTH @ BOT	BLOWS PER 6 IN ON SAMPLER (FORCE ON TUBE) 0 - 6	6 - 12	12- 18	CORE TIME PER FT (MIN)	DENSITY OR CONSIST MOIST	STRATA CHANGE DEPTH ELEV	FIELD IDENTIFICATION OF SOIL REMARKS INCL. COLOR, LOSS OF WASH WATER, SEAMS IN ROCK, ETC.
		1	ss	24"	16"	2'0"	1	2			moist		3" TOPSOIL
							5	5			loose		brn red F SAND, tr silt, roots
		2	ss	24"	1"	4'0"	3	2			wet	2'8"	red brn F SAND, tr silt
							1	1			soft		blk drk brn ORGANIC SILT & PEAT
5		3	ss	24"	12"	6'0"	1	1			wet		gry brn grn ORGANIC SILT, sm F-C sand, lit peat,clay
							1/12"				v soft		
		4	ss	24"	24"	8'0"	1/12"				wet	7'0"	drk brn blk ORGANIC SILT, lit wood, FM sand, tr roots
							8	12			loose		
		5	ss	10"	10"	8'10"	15	60/4"			v dense		red brn FM SAND, tr F gravel, tr silt
10													red brn F-M SAND, tr F gravel
		6	ss	22"	17"	11'10"	9	18			wet		tr boulder, lit cobble 9 - 10"
							27	60/4"			dense		red brn FMC SAND, lit silt, F gravel
												12'0"	
													poss BEDROCK
												12'6"	Auger refusal
15													E.O.B. 12'6"
20													
25													
30													
35													
40													

NOTE: Subsoil conditions revealed by this investigation represent conditions at specific locations and may not represent conditions at other locations or times.

GROUND SURFACE TO ____FT. USED ____CASING THEN ____CASING TO ____FT. **HOLE NO. B-1**
A = AUGER UP = UNDISTURBED PISTON T = THINWALL V = VANE TEST
WOR = WEIGHT OF RODS WOH = WEIGHT OF HAMMER & RODS C = COARSE
SS = SPLIT TUBE SAMPLER H.S.A. = HOLLOW STEM AUGER M = MEDIUM
PROPORTIONS USED: TRACE = 0 - 10% LITTLE = 10 - 20% SOME = 20 - 35% AND =35 - 50% F = FINE

SOILTESTING, INC.
90 DONOVAN RD.
OXFORD, CT 06478
CT (203) 262-9328
NY (914) 946-4850

CLIENT: Ms. Cory McNeill
SHEET 1 OF 1
HOLE NO. B-2
PROJECT NO. G7-9616-14
PROJECT NAME: 30 Minor Road
BORING LOCATIONS: per sketch
LOCATION: East Haven, CT
Next to concrete pad
back left of house
FOREMAN - DRILLER: TP/cMc
INSPECTOR:

	CASING	SAMPLER	CORE BAR
TYPE	HSA	SS	
SIZE I.D.	3 ¼"	1 3/8"	
HAMMER WT.		140#	BIT
HAMMER FALL		30"	

OFFSET
DATE START 1/20/14
DATE FINISH 1/20/14
SURFACE ELEV.
GROUND WATER ELEV.

GROUND WATER OBSERVATIONS
AT 2 FT AFTER 0 HOURS
AT __FT AFTER __HOURS

DEPTH	CASING BLOWS PER FOOT	SAMPLE NO	Type	PEN	REC	DEPTH @ BOT	BLOWS PER 6 IN ON SAMPLER (FORCE ON TUBE) 0 - 6	6 - 12	12- 18	CORE TIME PER FT (MIN)	DENSITY OR CONSIST MOIST	STRATA CHANGE DEPTH ELEV	FIELD IDENTIFICATION OF SOIL REMARKS INCL. COLOR, LOSS OF WASH WATER, SEAMS IN ROCK, ETC.
		1	ss	24"	15"	2'0"	2	3			moist		6" TOPSOIL
							5	2			loose	1'6"	red brn FM SAND, lit silt
		2	ss	24"	10"	4'0"	2	2			wet		drk brn ORGANIC SILT & PEAT, tr F sand
							1/12"				v soft	4'0"	drk brn ORGANIC SILT & PEAT, lit FM sand
5		3	ss	24"	17"	6'0"	2	4			wet	5'6"	gry FM SAND, snn organic silt, lit peat
							5	6			loose		gry brn F-M SAND, tr F gravel, silt
		4	ss	24"	19"	8'0"	8	12			wet		red brn F-C SAND, lit F gravel, tr silt
							17	13			compact		
		5	ss	10"	24"	10'0"	6	8			wet		SAME
10							10	10			compact		
		6	ss	22"	24"	12'0"	2	3			wet		red brn F-C SAND, tr F gravel
							6	12			loose		
											wet		
15		7	ss	2"	1"	15'2"	60/2"				v dense	15'0"	red brn FMC SAND, lit silt, F gravel, tr weathered sandstone
													BOULDERS or fractured BEDROCK
												17'0"	poss weathered BEDROCK from 16'
													Auger refusal
													E.O.B. 17'0"
20													
25													
30													
35													
40													

NOTE: Subsoil conditions revealed by this investigation represent conditions at specific locations and may not represent conditions at other locations or times.

GROUND SURFACE TO ____FT. USED ____CASING THEN ____CASING TO ____FT. **HOLE NO. B-2**
A = AUGER UP = UNDISTURBED PISTON T = THINWALL V = VANE TEST
WOR = WEIGHT OF RODS WOH = WEIGHT OF HAMMER & RODS C = COARSE
SS = SPLIT TUBE SAMPLER H.S.A. = HOLLOW STEM AUGER M = MEDIUM
PROPORTIONS USED: TRACE = 0 - 10% LITTLE = 10 - 20% SOME = 20 - 35% AND =35 - 50% F = FINE

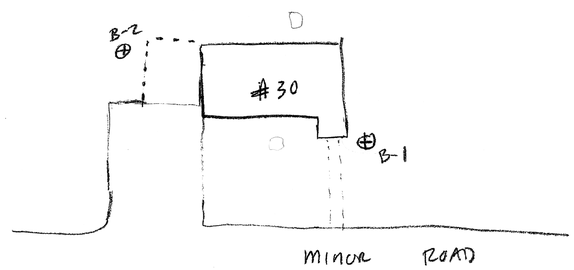

Lothrop
Lothrop Associates LLP Architects
100 Pearl Street
14th Floor
Hartford, Connecticut 06103
860-249-7251
White Plains Red Bank Hartford Rochester

STRUCTURAL ENGINEER:

Cmars Engineering, LLC
STRUCTURES FOUNDATIONS INVESTIGATIONS
58 Orchard Hill Road, Branford, CT 06405
Tel 203-483-8789 Fax 203-483-8285

SURVEYOR:

ENVIRONMENTAL ENGINEER:

FUSS & O'NEILL
ENVIRONMENTAL, INC.
340 HARTFORD ROAD
MANCHESTER, CONNECTICUT 06040
860.646.2469
www.fuss&oneil.com

ISSUE NO.	ISSUE DATE	DESCRIPTION
1	26 MARCH 2015	ISSUED FOR BID

State Of Connecticut
Department Of Housing
505 Hudson Street
Hartford, Connecticut 06106
Demolition & Hazardous Material
Abatement Of Existing Residence
And Construction Of
New Residence
for
Susan Ranalli
Application No. 5040
105 Minor Road
(AKA 30 Minor Road)
East Haven, Connecticut 06512

BORING LOCATION PLAN AND BORING LOGS

PROJECT NO.: 1524-28
SCALE: AS NOTED
DRAWING NO.:
S-103

GENERAL NOTES:

1. LOT IS WITHIN AN R–3 ZONING DISTRICT.
2. LOT AREA = 7,320 SF OR 0.168 ACRES.
3. NORTH ARROW AND BEARINGS ARE BASED ON REFERENCE MAP 4A.
4. REFERENCE IS HEREBY MADE TO THE FOLLOWING MAPS:
   A. "PROPERTY & TOPOGRAPHIC MAP – EXISTING CONDITIONS – PROPERTY LOCATED AT #30 MINOR ROAD – EAST HAVEN, CONNECTICUT PREPARED FOR CORY McNEILL" SCALE: 1"=10'; DATED: 7/15/2013; AND PREPARED BY CRISCUOLO ENGINEERING, LLC.
   B. "COASTAL RESOURCE PLAN – WOODMONT CONNECTICUT QUADRANGLE" DATED 1979 AND PREPARED BY THE COASTAL MANAGEMENT PROGRAM, CONNECTICUT DEPARTMENT OF ENVIRONMENTAL PROTECTION.
5. PROPERTY LINE, PLANIMETRIC INFORMATION AND SPOT ELEVATIONS DEPICTED HEREON WERE REPRODUCED FROM THE REFERENCE MAP 4A.
6. UTILITY LOCATIONS DEPICTED ON THE DRAWINGS HAVE BEEN COMPILED FROM THE ABOVE REFERENCED MAP. ALL LOCATIONS SHOWN SHOULD BE CONSIDERED APPROXIMATE ONLY AND ALL UTILITIES MAY NOT BE SHOWN. THE CONTRACTOR SHALL BE RESPONSIBLE FOR LOCATING ALL UTILITIES AND FOR THE MAINTENANCE AND PROTECTION THEREOF. THE CONTRACTOR SHALL CONTACT "CALL BEFORE YOU DIG" (1–800–922–4455) PRIOR TO THE START OF WORK TO ESTABLISH AND HAVE MARKED ON THE GROUND THE LOCATION OF ALL UNDERGROUND UTILITIES. THE CONTRACTOR SHALL NOTIFY THE ENGINEER IN THE EVENT A UTILITY IS LOCATED OR IS UNCOVERED DURING THE PROGRESS OF THE WORK THAT WAS NOT INDICATED ON OR IS NOT IN ACCORDANCE WITH THE DRAWINGS.
7. THE CONTRACTOR SHALL ADHERE TO THE REGULATIONS AND STANDARDS OF THE TOWN OF EAST HAVEN, ALL APPLICABLE STATE AND FEDERAL REGULATORY AUTHORITIES, THE PROVISIONS OF THE CONTRACT DOCUMENTS, AND ANY APPROVALS AND/OR PERMITS ATTACHED THERETO.
8. UNLESS OTHERWISE NOTED, ALL WORK AND MATERIALS SHALL CONFORM TO THE "STATE OF CONNECTICUT DEPARTMENT OF TRANSPORTATION STANDARD SPECIFICATIONS FOR ROADS, BRIDGES AND INCIDENTAL CONSTRUCTION FORM 816", DATED 2004, AND ALL SUPPLEMENTS THERETO.
9. THE INSTALLATION OF ALL UTILITIES SHALL BE IN CONFORMANCE WITH THE REQUIREMENTS OF THE RESPECTIVE UTILITY COMPANIES. THE CONTRACTOR SHALL COORDINATE ALL WORK WITHIN THE MINOR ROAD RIGHT OF WAY WITH THE RESPECTIVE UTILITY COMPANIES AND THE TOWN OF EAST HAVEN.
10. PRIOR TO THE START OF WORK, THE CONTRACTOR SHALL THOROUGHLY REVIEW THE CONTRACT DOCUMENTS AND THE SITE OF THE WORK AND FAMILIARIZE HIMSELF WITH ALL EXISTING CONDITIONS AND FEATURES. THE CONTRACTOR SHALL VERIFY ALL ELEVATIONS PRIOR TO THE START OF WORK. THE CONTRACTOR SHALL NOTIFY THE ENGINEER OF ANY DISCREPANCIES BETWEEN THE DRAWINGS AND EXISTING CONDITIONS AND FEATURES IN THE FIELD PRIOR TO THE START OF WORK
11. THE CONTRACTOR SHALL CONFINE HIS OPERATIONS AND ACTIVITIES WITHIN THE PROJECT SITE PROPERTY LINES AND/OR THE CONTRACT LIMITS SHOWN ON THE DRAWINGS.
12. EXISTING CONDITIONS AND FEATURES SHALL BE MAINTAINED WHERE NEW CONSTRUCTION IS NOT SHOWN ON THE DRAWINGS UNLESS OTHERWISE DIRECTED BY THE ENGINEER. EXISTING CONDITIONS AND FEATURES DISTURBED AS A RESULT OF THE CONTRACTOR'S OPERATIONS OR ACTIVITIES WHERE NEW CONSTRUCTION IS NOT SHOWN SHALL BE RESTORED TO ORIGINAL CONDITION UNLESS OTHERWISE SPECIFIED OR DIRECTED BY THE ENGINEER.
13. THE CONTRACTOR SHALL PROVIDE AND MAINTAIN EROSION AND SEDIMENT CONTROLS AS SHOWN ON THE DRAWINGS OR AS DIRECTED. EROSION AND SEDIMENT CONTROLS SHALL BE MAINTAINED UNTIL ALL DISTURBED AREAS HAVE BEEN STABILIZED.
14. SHOULD DEWATERING OF EXCAVATIONS, STRUCTURES, PIPELINES, ETC. BE REQUIRED, THE DISCHARGE FROM DEWATERING OPERATIONS SHALL BE DIRECTED TO A SETTLING AND/OR FILTER FACILITY CONSTRUCTED IN ACCORDANCE WITH THE CONTRACT DOCUMENTS AND IN A LOCATION APPROVED BY THE ENGINEER.
15. IN THE EVENT OF A CONTAMINANT SPILL THE CONTRACTOR SHALL IMMEDIATELY NOTIFY THE DEPARTMENT OF ENVIRONMENTAL PROTECTION OIL AND CHEMICAL SPILL DEPARTMENT (860–424–3338) AND THE TOWN OF EAST HAVEN.
16. THE CONTRACTOR SHALL KEEP MINOR ROAD FREE OF ACCUMULATION OF DIRT, DUST AND DEBRIS DUE TO HIS OPERATIONS.
17. ALL LINES AND GRADES ARE TO BE LAID OUT BY A LICENSED LAND SURVEYOR. IF THERE ARE ANY DISCREPANCIES THE DESIGN ENGINEER SHOULD BE NOTIFIED.
18. THE VERTICAL DATUM FOR THE ELEVATIONS DEPICTED HEREON IS N.A.V.D. 88.
19. THE SUBJECT PROPERTY IS LOCATED PARTIALLY WITHIN FLOOD ZONE AE(EL. 12) AND PARTIALLY WITHIN ZONE AE(EL. 10) AS DEPICTED ON FLOOD INSURANCE RATE MAP NUMBER 09009C0557J, REVISED JULY 8, 2013
20. ALL WORK AND IMPROVEMENTS TO BE COMPLETED ON THE HOME WILL BE TO FEMA COMPLIANT STANDARDS, ON AN ENGINEERED FOUNDATION MEETING ALL BUILDING DEPARTMENT AND FEMA RULES AND REGULATIONS.
21. THE PROPERTY LIES WITHIN THE FEMA FLOOD ZONE AE 10 (SEE GENERAL NOTE #20). THE HOME'S PROPOSED FIRST FLOOR ELEVATION IS 13.5. A STRUCTURAL ENGINEER SHALL BE RETAINED TO DESIGN A FOUNDATION FOR THE HOME THAT WILL BE FEMA COMPLIANT, I.E.:
   A. THE FF SHALL BE BE ABOVE AE 10.
   B. ALL ELECTRICAL SHALL BE ABOVE AE 10.
   C. ALL MECHANICALS SHALL BE ABOVE AE 10.
   D. BELOW AE 10 SHALL BE OPEN AND FREE OF OBSTRUCTION SO AS TO NOT IMPEDE THE FLOW OF WATER.
22. THE PRESENCE AND LOCATION OF THE COASTAL RESOURCES DEPICTED HEREON IS BASED UPON INFORMATION OBTAINED FROM REFERENCE MAP 4B AND AS OBSERVED BY THE AGENT.
23. OFFSTREET PARKING SHALL BE WITHIN THE EXISTING DRIVEWAY AREA.

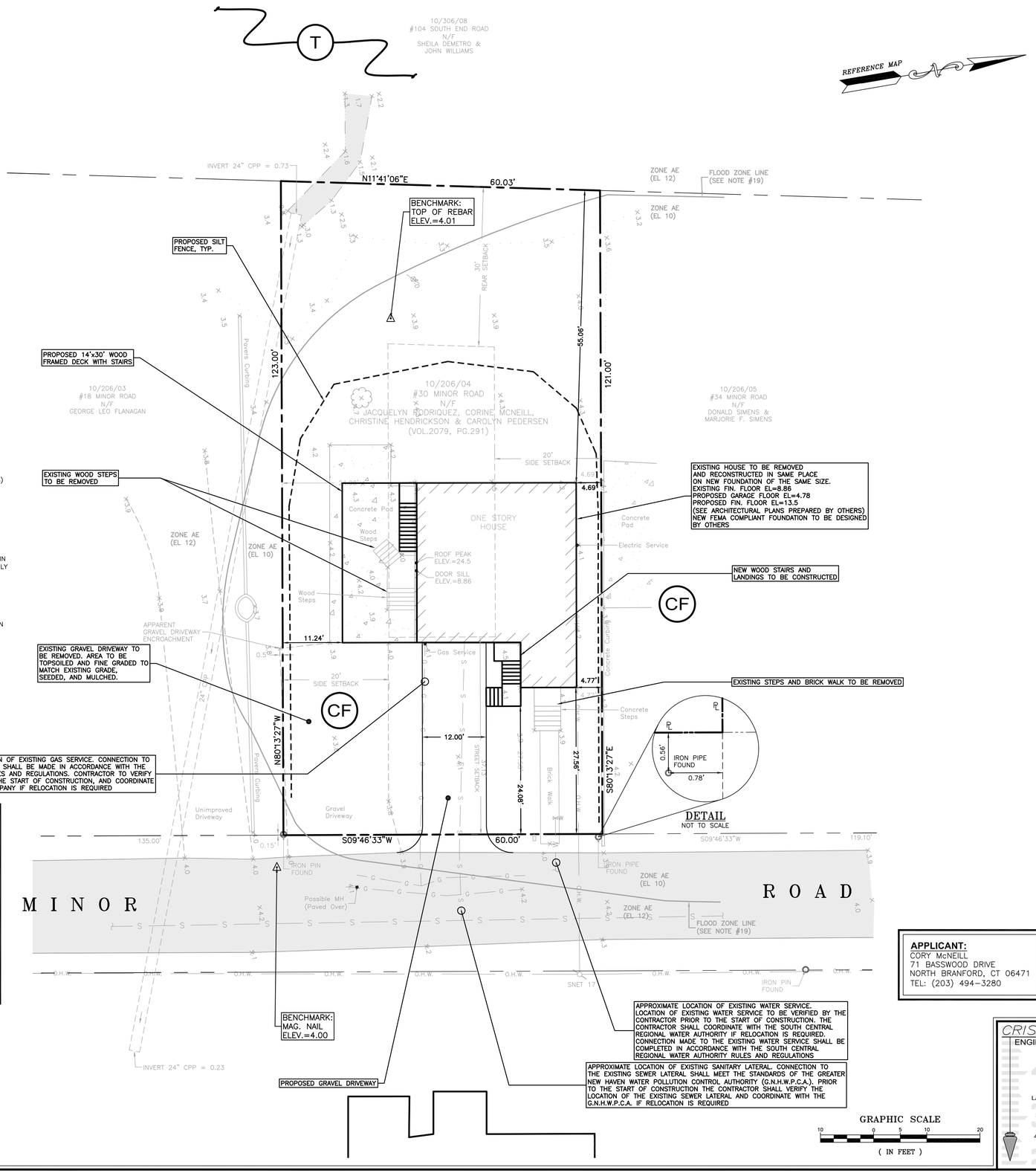

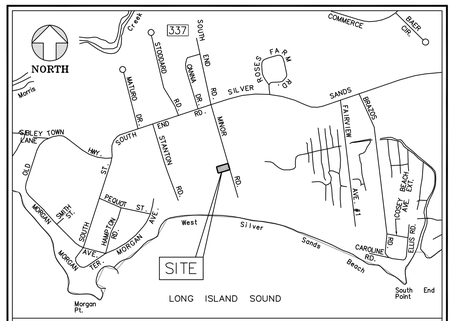

LOCATION MAP
SCALE: 1"=800'

LEGEND

EXISTING		PROPOSED
	Street Line	
	Property Line	
	Tie Line	
	Easement Line	
	Curb	
//	Wood Fence	
X	Wire Fence	X
	Stone Wall	
	Elevation Contour	
× XXX	Spot Elevation	× XXX
	Watercourse Line	
	Inland Wetland Boundary	
WF XX	Wetland Flag (Number)	WF XX
	Vegetation Line	
	Deciduous Tree	
	Coniferous Tree	
	Catch Basin	
	Manhole	
	Utility Pole (With Guy)	
⊳⋈W	Water Valve/Meter Pit	⊳⋈W
O.H.W.	Over Head Wire	O.H.W.
W	Water Main/Service	W
N/A	Sanitary Lateral	L
S	Sanitary Sewer	S
G	Gas Line	G
N/A	Roof Drain	R
N/A	Footing Drain	F
	Stormwater Pipe <12" Diameter	
	Stormwater Pipe >12" Diameter	
N/A	Grade To Drain	G.T.D.

REVIEWED AND APPROVED BY THE TOWN OF EAST HAVEN PLANNING AND ZONING COMMISSION IN ACCORDANCE WITH THE REQUIREMENTS FOR COASTAL SITE PLAN REVIEW UNDER SECTION 11–15 OF PUBLIC ACT 79–535.
DATED:_____

ZONING STANDARDS SCHEDULE EAST HAVEN R–3 DISTRICT

STANDARD	REQUIRED	EXISTING	PROPOSED
MINIMUM LOT AREA	20,000 SF	7,320 SF **	N/C
MINIMUM LOT AREA PER DWELLING UNIT	20,000 SF	7,320 SF **	N/C *
MINIMUM SQUARE ON THE LOT	100 FT	60 FT **	N/C
MINIMUM LOT FRONTAGE	100 FT	60 FT **	N/C
MAXIMUM NUMBER OF STORIES	3	1	2 (a)
MAXIMUM HEIGHT OF BUILDING	40 FT***	20.5 FT	30 FT
MINIMUM SETBACKS:			
FROM STREET LINE****	37.13 FT ***	19.45 FT	24 FT *
REAR PROPERTY LINE	30 FT ***	54.97 FT	55 FT
SIDE PROPERTY LINE			
–NORTHERLY SIDE LINE	20 FT ***	4.69 FT **	N/C *
–SOUTHERLY SIDE LINE	20 FT ***	17.07 FT **	11 FT *
MAXIMUM LOT COVERAGE	20 %	15.2 %	20% (b)
MAXIMUM FLOOR AREA	40 %	13.8 %	18.2% (c)

* VARIANCE REQUIRED
** EXISTING NON–CONFORMING VALUE.
*** IN RESIDENCE DISTRICTS, ANY PORTION OF A BUILDING OR OTHER STRUCTURE EXCEEDING 30 FT IN HEIGHT SHALL BE SET BACK FROM ANY PROPERTY OR STREETLINE BY 2 ADDITIONAL FEET FOR EACH FOOT, OR FRACTION THEREOF, BY WHICH SUCH PORTION EXCEEDS 30 FT IN HEIGHT.
**** TOTAL REQUIRED STREETLINE SETBACK = 25 FT (REQ'D IN R–3 DISTRICT) + 12.13 FT (ADDITIONAL FOR NARROW STREET) = 37.13 FT. THE EXISTING MINOR ROAD RIGHT OF WAY WIDTH IS 25.75 FT.

(a) PER THE TOWN OF EAST HAVEN ZONING REGULATIONS, THE NEW CAR PARKING/STORAGE AREA THAT WOULD BE UNDERNEATH THE RECONSTRUCTED HOUSE IS CONSIDERED A STORY.
(b) THE FOOTPRINT OF THE RECONSTRUCTED HOUSE WOULD BE THE SAME AS THAT OF THE EXISTING HOUSE. THE INCREASE IN THE PROPOSED LOT COVERAGE FROM THE EXISTING CONDITION, AS DEPICTED IN THIS CHART, IS DUE TO THE NEW DECK AND STAIRWAYS.
(c) PER THE TOWN OF EAST HAVEN ZONING REGULATIONS, THE NEW CAR PARKING AREA THAT WOULD BE UNDERNEATH THE RECONSTRUCTED HOUSE IS INCLUDED IN THE FLOOR AREA RATIO. THE INCREASE IN THE PROPOSED FLOOR AREA RATIO FROM THE EXISTING CONDITION, AS DEPICTED IN THIS CHART, IS DUE TO THE NEW CAR PARKING AREA THAT WOULD BE UNDERNEATH THE RECONSTRUCTED HOUSE.

APPLICANT:
CORY McNEILL
71 BASSWOOD DRIVE
NORTH BRANFORD, CT 06471
TEL: (203) 494–3280

COASTAL RESOURCE LEGEND

T	TIDAL WETLANDS: THOSE AREAS WHICH BORDER OR LIE BENEATH TIDAL WATERS SUBJECT TO TIDAL ACTION, INCLUDING THOSE AREAS NOW OR FORMERLY CONNECTED TO TIDAL WATERS, AND WHOSE SURFACE IS AT OR BELOW AN ELEVATION OF ONE FOOT ABOVE LOCAL EXTREME HIGH WATER; AND UPON WHICH MAY GROW OR CAPABLE OF GROWING SOME OF THE VEGETATION LISTED IN SECTION 22a–29 OF THE CONNECTICUT GENERAL STATUTES.
CF	COASTAL 'FLOOD' HAZARD AREA: 100 YEAR COASTAL FLOOD HAZARD AREA AS IDENTIFIED BY THE FEDERAL EMERGENCY MANAGEMENT AGENCY (FEMA). ON THOSE COASTAL ISLANDS CURRENTLY UNMAPPED BY FEMA, THE FLOOD HAZARD AREA IS CONSERVATIVELY APPROXIMATED BY THE 10' CONTOUR INTERVAL.

CRISCUOLO ENGINEERING LLC
CONSULTING ENGINEERS
LAND SURVEYORS
420 East Main Street
Building 1 – Suite 9
Branford, CT 06405
TEL: 203/481-0807
FAX: 203/488-5729

REV. DATE:	DESCRIPTION:
9/19/13	REV. NEW HOUSE FF ELEV

JOB TITLE: PROPERTY LOCATED AT #30 MINOR ROAD EAST HAVEN, CONNECTICUT

PREPARED FOR: CORY McNEILL

DATE: 7/15/2013
SCALE: 1"=10'
DRAWN: J.M.P.
CHECKED: R.A.C.
JOB: 2013.051

DRAWING TITLE: COASTAL SITE PLAN

DRAWING NO.: 1 OF 3

ASSESSOR'S MAP 10, BLOCK 206, LOT 04

CADD FILE: 2013–051POB

SURVEY NOTES:

1. THIS SURVEY AND MAP HAS BEEN PREPARED IN ACCORDANCE WITH SECTIONS 20–300b–1 THRU 20–300b–20 OF THE REGULATIONS OF CONNECTICUT STATE AGENCIES – "MINIMUM STANDARDS FOR SURVEYS AND MAPS IN THE STATE OF CONNECTICUT" AS ENDORSED BY THE CONNECTICUT ASSOCIATION OF LAND SURVEYORS, INC. ON SEPT. 26, 1996 BEING A PROPERTY SURVEY BASED ON A RESURVEY CONFORMING TO HORIZONTAL ACCURACY CLASS A–2; TOPOGRAPHY TO CLASS T–2.
2. NORTH ARROW AND BEARINGS ARE BASED ON MAP REFERENCE "A". VERTICAL DATUM = N.A.V.D. 88.
3. PARCEL IS LOCATED PARTIALLY WITHIN FLOOD ZONE AE(EL. 12) AND PARTIALLY WITHIN ZONE AE(EL. 10) AS DEPICTED ON FLOOD INSURANCE RATE MAP NUMBER 09009C0557J, REVISED JULY 8, 2013. LINE DEPICTED HEREON IS COMPILED FROM SAID MAP AND IS APPROXIMATE. LINE DEPICTED HEREON IS LABELED "LIMIT OF MODERATE WAVE ACTION" ON SAID MAP.
4. PARCEL IS LISTED BY THE CITY OF EAST HAVEN ASSESSOR AS #30 MINOR ROAD. THE PARCEL IS ALSO KNOWN AS #105 MINOR'S ROAD AND #34 MINOR'S ROAD AS RECORDED IN VOLUME 2079, PAGE 291 OF THE EAST HAVEN LAND RECORDS.
5. PARCEL IS TOGETHER WITH AND SUBJECT TO THE FOLLOWING:
   - A. A RIGHT OF WAY IN COMMON WITHS OTHERS FOR ALL PURPOSES WHATSOEVER OVER PRIVATE ROADWAY KNOWN AS "MINOR'S ROAD" EXTENDING FROM SOUTH END ROAD TO THE WATERS OF LONG ISLAND SOUND AS RECORDED IN VOLUME 2079, PAGE 291 OF THE EAST HAVEN LAND RECORDS.
   - B. AN EASEMENT OF UNDEFINED LOCATION IN FAVOR OF THE NEW HAVEN GAS LIGHT COMPANY AS RECORDED IN VOLUME 42, PAGE 46 OF THE EAST HAVEN LAND RECORDS.
   - C. AN EASEMENT OF UNDEFINED LOCATION IN FAVOR OF THE SOUTHERN NEW ENGLAND TELEPHONE COMPANY AS RECORDED IN VOLUME 42, PAGE 145 OF THE EAST HAVEN LAND RECORDS.
   - D. ANY RESTRICTIONS ON RECORD AS MAY APPEAR.
6. DISTANCES BETWEEN BUILDING AND PROPERTY LINE DEPICTED HEREON MEASURED TO BUILDING SIDING.
7. PARCEL AREA = 7,320 SQUARE FEET OR 0.168 ACRES.

MAP REFERENCES:

A. "PROPERTY & TOPOGRAPHIC MAP, EXISTING CONDITIONS, PROPERTY LOCATED AT #2 MINOR ROAD, EAST HAVEN, CONNECTICUT, PREPARED FOR LISA KWESELL"; SCALE: 1"=10'; DATED: JANUARY 14, 2013; REVISED THROUGH: FEBRUARY 13, 2013; AND PREPARED BY CRISCUOLO ENGINEERING, LLC.

B. "JAMES V. URSINI, SILVER SANDS, EAST HAVEN, CONN."; SCALE: 1"=30'; DATED: APRIL, 1944; AND PREPARED BY CHAS. H. MILLER.

C. "CARMELA J. SPOSE, MINOR ROAD, EAST HAVEN, CONN."; SCALE: 1"=20'; DATED: MARCH, 1974; AND PREPARED BY CHAS. H. MILLER.

D. "MARY L. APPICELLA, MINOR ROAD, EAST HAVEN, CONN."; SCALE: 1"=20'; DATED: MAY, 1974; AND PREPARED BY CHAS. H. MILLER.

E. "NEW HAVEN WATER CO. RIGHTS OF WAYS TO BE ACQUIRED OF ROSE ANN CIERCIELLI ET ALS, ROBERT AND ADELINE ROSE AND DONNA L. ROSE, MINOR ROAD, EAST HAVEN, CONN."; SCALE: 1"=20'; DATED: MARCH, 1974; AND PREPARED BY CHAS. H. MILLER.

F. "MAP OF DAVID A., ALAN T. & JAMIA SPOSE PROPERTY, EAST HAVEN, CONNECTICUT"; SCALE: 1"=20'; DATED: MARCH, 1994; AND PREPARED BY R.J. SCHATZLEIN.

G. "EASEMENT MAP PREPARED FOR HENRY L. BURKE, MINOR ROAD, SILVER SANDS ROAD AND SOUTH END ROAD, EAST HAVEN, CONNECTICUT"; SCALE: 1"=40'; DATED: FEBRUARY 3, 1993; AND PREPARED BY DICESARE–BENTLEY ENGINEERS, INC.

H. "A SUBDIVISION OF PROPERTY OF ROBERT K. & ADELINE M. ROSE, 104 SOUTH END ROAD, EAST HAVEN, CONNECTICUT"; SCALE: 1"=40'; DATED: JULY 18, 1995; AND PREPARED BY GORDON BILIDES.

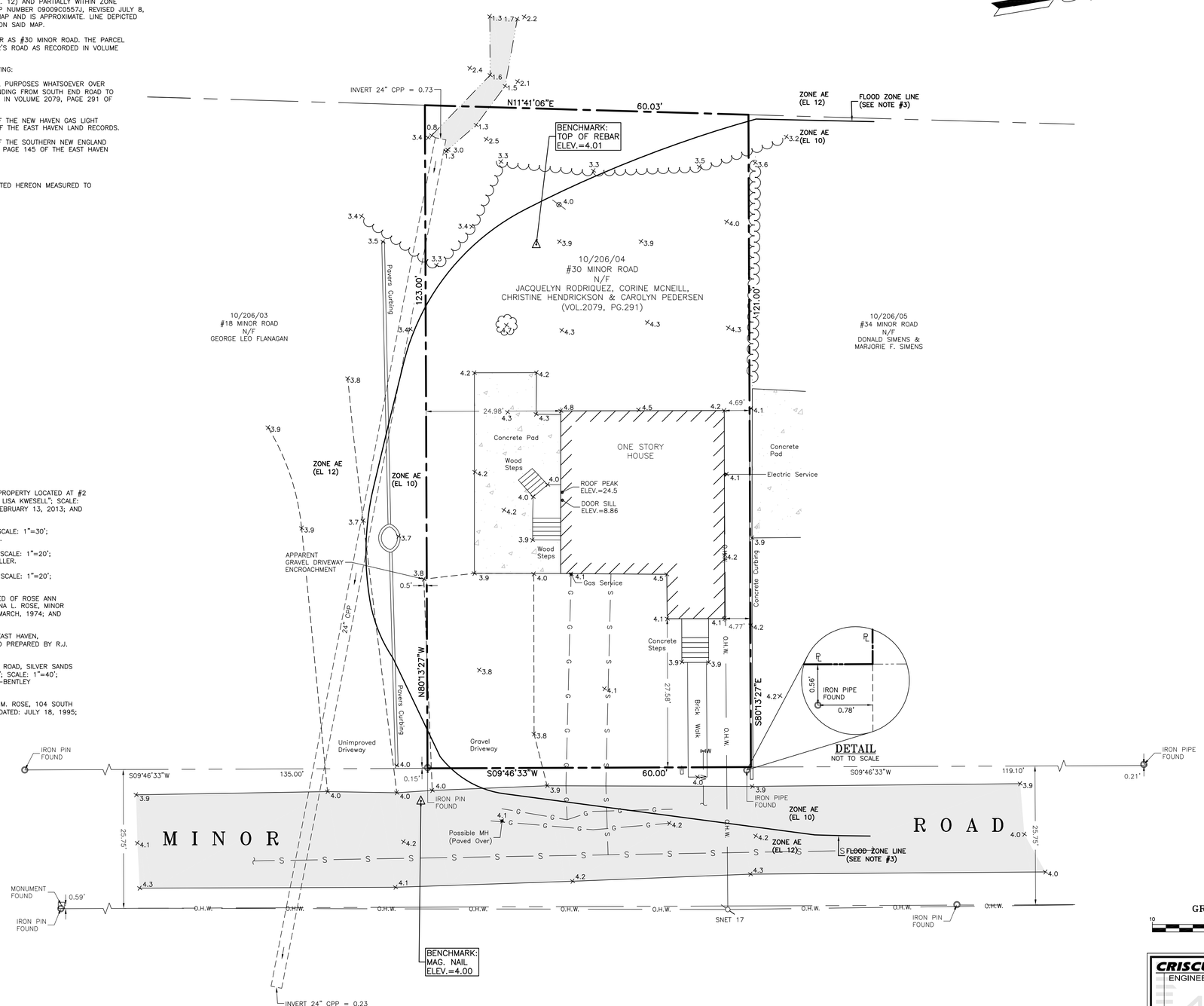

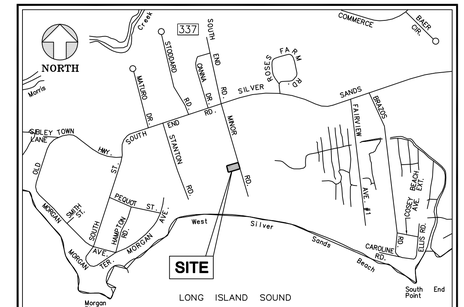

LOCATION MAP
SCALE: 1"=800'

SURVEY LEGEND

- Street Line
- Property Line
- Tie Line
- Easement Line
- Curb
- Wood Fence
- Wire Fence
- Stone Wall
- Elevation Contour
- × XXX — Spot Elevation
- Watercourse Line
- Inland Wetland Boundary
- WF XX — Wetland Flag (Number)
- Vegetation Line
- Deciduous Tree
- Coniferous Tree
- Catch Basin
- Manhole
- Utility Pole (With Guy)
- WV — Water Valve/Meter Pit
- O.H.W. — Over Head Wire
- W — Water Main/Service
- S — Sanitary Sewer
- G — Gas Line
- Stormwater Pipe <12" Diameter
- Stormwater Pipe >12" Diameter
- Ironpin Or Pipe Found
- Monument Found
- Drill Hole Found
- Nail Or Spike Found
- XX/XX/XX — Assessor's Map/Block/Lot Number
- Lamp Post
- Mailbox

TO MY KNOWLEDGE AND BELIEF THIS MAP IS SUBSTANTIALLY CORRECT AS NOTED HEREON

ROBERT A. CRISCUOLO L.S. #13204
PAUL L. NOTT L.S. #13629

THIS MAP NOT VALID WITHOUT LIVE SIGNATURE AND EMBOSSED SEAL OF THE LAND SURVEYOR NOTED ABOVE.

GRAPHIC SCALE
10 0 5 10 20
(IN FEET)

CRISCUOLO ENGINEERING LLC
CONSULTING ENGINEERS
LAND SURVEYORS
420 East Main Street
Building 1 - Suite 9
Branford, CT 06405
TEL: 203/481-0807
FAX: 203/488-5729

REV.	DATE:	DESCRIPTION:

JOB TITLE: **PROPERTY LOCATED AT #30 MINOR ROAD EAST HAVEN, CONNECTICUT**

PREPARED FOR: **CORY McNEILL**

DATE: 7/15/2013
SCALE: 1"=10'
DRAWN: M.D.B.
CHECKED: P.L.N.
JOB: 2013.051

DRAWING TITLE: **EXISTING CONDITIONS PLAN**

ASSESSOR'S MAP 10, BLOCK 206, LOT 04

DRAWING NO.: 2 OF 3

CADD FILE: 2013–051POB

Z:\2013\2013-051\DWG\2013-051POB.dwg, 2/11/2015 9:58:18 AM

A. PROJECT NARRATIVE

THE PROPOSED PROJECT ENTAILS THE REMOVAL OF AN EXISTING HOUSE AND CONSTRUCTION OF NEW HOUSE AT A HIGHER ELEVATION ON NEW FOUNDATION WITHIN THE SAME FOOTPRINT, TO ACHIEVE FEMA COMPLIANCY. ALSO INCLUDED IN THE PROJECT SCOPE IS MINOR SITE GRADING AND THE INSTALATION OF NEW STAIRS AND DECK.

LOCATION OF PROJECT:

#30 MINOR ROAD
EAST HAVEN, CONNECTICUT

OWNERS:

JACQUELYN RODRIQUEZ,
CORINE McNEILL,
CHRISTINE HENDRICKSON,
& CAROLYN PEDERSEN

C/O CORY McNEILL
71 BASSWOOD DRIVE
NORTH BRANFORD, CT 06471
TEL: (203) 494-3280

APPLICANT:

CORY McNEILL
71 BASSWOOD DRIVE
NORTH BRANFORD, CT 06471
TEL: (203) 494-3280

OWNERS AGENT:

CRISCUOLO ENGINEERING LLC
420 EAST MAIN STREET
BRANFORD, CONNECTICUT 06405
TEL: (203) 481-0807
FAX: (203) 488-5729

TOWN CONTACTS:

FRANK BIANCUR, JR.
PLANNING & ZONING ADMINISTRATOR
ZONING ENFORCEMENT OFFICER
250 MAIN STREET
EAST HAVEN, CT 06512
TEL: (203) 468-3357
FAX: (203) 466-4133

KEVIN WHITE, P.E.
TOWN ENGINEER
461 NORTH HIGH STREET
EAST HAVEN, CT 06512
TEL: (203) 468-3290

CONSTRUCTION SCHEDULE AND SEQUENCE:

1. EQUIPMENT MOBILIZATION.
2. INSTALLATION OF EROSION AND SEDIMENTATION CONTROLS.
3. REMOVAL OF EXISTING HOUSE.
4. INSTALLATION OF NEW FOUNDATION.
5. CONSTRUCTION NEW HOUSE, DECK AND STAIRS.
6. FINE GRADING OF DISTURBED AREAS.
7. REMOVAL OF TEMPORARY EROSION AND SEDIMENTATION CONTROLS ONCE CONSTRUCTION ACTIVITIES ARE COMPLETE AND THE SITE IS COMPLETELY STABILIZED.

B. CONTINGENCY PLAN

PRIOR TO THE START OF CONSTRUCTION, THE CONTRACTOR SHALL PROVIDE THE OWNERS AGENT AND THE TOWN OF EAST HAVEN WITH THE NAMES AND TELEPHONE NUMBERS OF THE RESPONSIBLE PERSONS TO BE CONTACTED IN THE EVENT OF AN EROSION AND/OR SEDIMENT CONTROL PROBLEM.

THE CONTRACTOR SHALL AT ALL TIMES KEEP A SUFFICIENT AMOUNT OF FILTER FABRIC SEDIMENT FENCE AND/OR HAYBALES ON THE PROJECT SITE TO CONTROL EROSION AND/OR SEDIMENT PROBLEMS. IN THE EVENT OF A PROBLEM THE CONTRACTOR SHALL PROMPTLY STABILIZE THE PROBLEM AND CONTAIN ANY SEDIMENT AND THEN NOTIFY THE TOWN OF EAST HAVEN.

C. EROSION AND SEDIMENT CONTROL

THE CONTRACTOR SHALL BE RESPONSIBLE FOR IMPLEMENTATION OF THE EROSION AND SEDIMENT CONTROL PLAN FOR THE PROJECT.

THE MINIMUM STANDARDS FOR ALL EROSION AND SEDIMENT CONTROL MEASURES SHALL BE THOSE OUTLINED IN THE "CONNECTICUT GUIDELINES FOR SOIL EROSION AND SEDIMENT CONTROL", MAY, 2002, LATEST REVISION. ALTERNATIVE MEASURES, METHODS, MEANS, AND TECHNIQUES MAY BE ALLOWED WITH THE PRIOR APPROVAL OF THE ENGINEER.

1. GENERAL GUIDELINES:

a). NO CONSTRUCTION ACTIVITY SHALL TAKE PLACE WITHIN AREAS DESIGNATED AS INLAND WETLANDS, WATERCOURSES OR FLOODPLAINS, OR WITHIN STREAM CHANNEL ENCROACHMENT LINES WITHOUT ALL REQUIRED APPROVALS AND/OR PERMITS.

b). TEMPORARY EROSION AND SEDIMENT CONTROLS SHALL BE INSTALLED PRIOR TO THE START OF CONSTRUCTION.

c). ALL EROSION AND SEDIMENT CONTROLS SHALL BE MAINTAINED CONTINUOUSLY AND SHALL NOT BE REMOVED UNTIL ALL DISTURBED AREAS HAVE BEEN STABILIZED.

d). THE CONTRACTOR SHALL LIMIT THE DISTURBANCE OF LAND TO THOSE AREAS SHOWN ON THE DRAWINGS AND SHALL TAKE REASONABLE CARE TO PROTECT AND PRESERVE EXISTING VEGETATION WITHIN THE LIMITS OF DISTURBANCE WHERE FEASIBLE.

e). WHERE PRACTICABLE, THE CONTRACTOR SHALL PLAN HIS CONSTRUCTION OPERATIONS SO AS TO LIMIT THE AREAS OF EXPOSED SOIL TO AREAS ACTIVELY UNDER CONSTRUCTION. THE CONTRACTOR SHALL TAKE REASONABLE CARE TO LIMIT THE PERIOD OF EXPOSURE OF DISTURBED AREAS. THE INSTALLATION OF PERMANENT VEGETATIVE MEASURES SHALL BE ACCOMPLISHED AS SOON AS IS PRACTICABLE.

f). ADEQUATE PROVISIONS SHALL BE TAKEN TO PROTECT ALL EXPOSED CUT AND FILL SLOPES FROM SURFACE WATER FLOW DAMAGE.

g). ALL MATERIAL FROM CLEARING AND GRUBBING OPERATIONS SHALL BE DISPOSED OF IN DESIGNATED AREAS ONLY.

h). WATER FROM DEWATERING OPERATIONS SHALL NOT BE DISCHARGED DIRECTLY TO ANY WETLAND OR WATERCOURSE. SUCH WATER SHALL BE DISCHARGED TO AN APPROVED SEDIMENT BASIN AND OR FILTER FACILITY OR TO A STORM DRAINAGE SYSTEM WHEN APPROVED. NO WATER FROM DEWATERING OPERATIONS SHALL BE DISCHARGED INTO A SANITARY SEWER SYSTEM.

i). THE STORAGE, WASHING, FUELING, AND MAINTENANCE OF EQUIPMENT AND VEHICLES SHALL TAKE PLACE IN DESIGNATED AREAS ONLY. IN THE EVENT OF A CONTAMINANT SPILL THE CONTRACTOR SHALL IMMEDIATELY NOTIFY THE DEPARTMENT OF ENVIRONMENTAL PROTECTION OIL AND CHEMICAL SPILL DEPARTMENT (860-424-3338), AND THE TOWN OF EAST HAVEN.

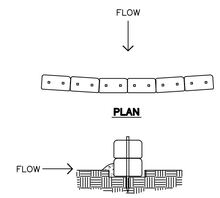

HAY BALE SEDIMENT BARRIER

NOT TO SCALE

1. EXCAVATE 4" DEEP TRENCH FOR LENGTH OF BALES.
2. PLACE AND STAKE BALES. TWO (2) STAKES PER BALE.
3. WEDGE LOOSE STRAW BETWEEN BALES.
4. BACKFILL AND COMPACT THE EXCAVATED SOIL ON UPHILL SIDE OF BARRIER.

1. INSPECT BALES AFTER EACH STORM EVENT.
2. REMOVE ACCUMULATED SEDIMENT FROM BALES WHEN IT REACHES 1/2 THE HEIGHT OF THE BARRIER.

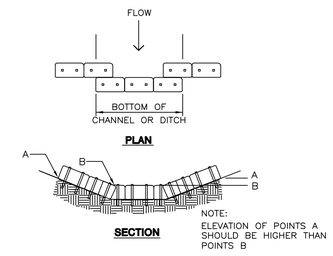

HAY BALE CHECK DAM

NOT TO SCALE

1. EXCAVATE 4" DEEP TRENCH FOR LENGTH OF BALES.
2. PLACE AND STAKE BALES. TWO (2) STAKES PER BALE.
3. WEDGE LOOSE STRAW BETWEEN BALES.
4. BACKFILL AND COMPACT THE EXCAVATED SOIL ON UPHILL SIDE OF BARRIER.

1. INSPECT BALES AFTER EACH STORM EVENT.
2. REMOVE ACCUMULATED SEDIMENT FROM BALES WHEN IT REACHES 1/2 THE HEIGHT OF THE BARRIER.

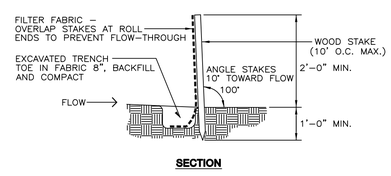

FILTER FABRIC FENCE

NOT TO SCALE

1. INSPECT BARRIER AFTER EACH STORM EVENT AND DAILY DURING PROLONGED RAINFALL.
2. REMOVE SEDIMENT WHEN IT REACHES APPROXIMATELY ONE-HALF THE BARRIER HEIGHT.

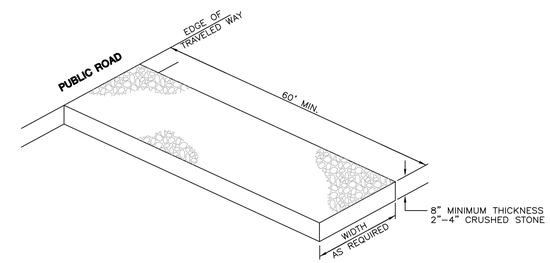

CONSTRUCTION ENTRANCE/ANTI-TRACKING PAD

NOT TO SCALE

1. CLEAR AND GRUB AREA BEFORE PLACEMENT OF STONE. A GEOTEXTILE LAYER MAY BE USED TO STABILIZE POOR SUBGRADE SOILS.
2. PROVIDE FOR POSITIVE DRAINAGE OF SEDIMENT LADEN WATER THROUGH AN APPROVED SEDIMENT FILTER OR TO A SEDIMENT BASIN.
3. MAINTAIN ENTRANCE SO AS TO PREVENT TRACKING OR FLOWING OF SEDIMENT ONTO PUBLIC ROAD.
4. SHOULD SITE CONDITIONS BE SUCH THAT SOIL CANNOT BE REMOVED BY VEHICLES TRAVELING OVER THE PAD, THE TIRES OF VEHICLES MAY HAVE TO BE WASHED PRIOR TO VEHICLES ENTERING THE PUBLIC ROAD. ALL WASH WATER SHALL BE DIRECTED THROUGH AN APPROVED SEDIMENT FILTER OR TO A SEDIMENT BASIN.

CRISCUOLO
ENGINEERING LLC
CONSULTING ENGINEERS
LAND SURVEYORS
420 East Main Street
Building 1 - Suite 9
Branford, CT 06405
TEL: 203/481-0807
FAX: 203/488-5729

REV.	DATE:	DESCRIPTION:

DATE: 7/15/2013
SCALE: AS SHOWN
DRAWN: J.M.P.
CHECKED: R.A.C.
JOB: 2013.051

JOB TITLE:
PROPERTY LOCATED AT
#30 MINOR ROAD
EAST HAVEN, CONNECTICUT

PREPARED FOR:
CORY McNEILL

DRAWING TITLE:
EROSION AND SEDIMENTATION NOTES & DETAILS

ASSESSOR'S MAP 10, BLOCK 206, LOT 04

DRAWING NO.: 3 OF 3

CADD FILE: 2013-051POB

Z:\2013\2013-051\DWG\2013-051POB.dwg, 2/11/2015 10:01:54 AM