AMAYA ARCHITECTS

ADDENDUM NUMBER 4

For:

Englander Residence
32 Field Court
Milford, Connecticut

Project Number 2243

23rd of February 2016

The Drawings and Specifications prepared by Amaya Architects and it's Consultants entitled **"Construction of a New Pier Foundation under a Raised Structure and Interior Renovations",** and known as the **"Englander Residence"** and located at **"32 Field Court, Milford, Connecticut 06460 – Drawings and Specifications dated the 1st of December 2015 - Project Number 2243"**, are hereby amended in the following particulars:

Item #	Section/Dwg	Description
		Addendum Four reflects "revisions and/or modifications" to the original bid package (Structural Drawings) for when the Structure is lifted in place.
1	Drawings S-1, S-2 and S-3	Delete the following Drawings from the Original Bid Package – S-1 Structural Details, S-2 Structural Plans and Details, S-3 Structural Plans and Details dated the 1st of December 2015.
2	Drawings S-1, S-2 and S-3	Add the following "revised" Drawings to the Bid Package – S-1 Structural Details, S-2 Structural Plans and Details, S-3 Structural Plans and Details dated the 22nd of February 2016.

END OF ADDENDUM FOUR

GENERAL NOTES:

1. THE STRUCTURAL PLANS AND SPECIFICATIONS, TO THE BEST OF OUR KNOWLEDGE, COMPLY WITH THE APPLICABLE REQUIREMENTS OF THE INTERNATIONAL RESIDENTIAL CODE AND THE INTERNATIONAL BUILDING CODE, LATEST EDITION AS SUPPLEMENTED, AMENDED, AND ADOPTED BY THE STATE OF CONNECTICUT.
2. THE CONTRACTOR SHALL COMPLY WITH THE REQUIREMENTS OF THE INTERNATIONAL RESIDENTIAL CODE AND THE INTERNATIONAL BUILDING CODE, LATEST EDITION AND ALL APPLICABLE FEDERAL AND STATE CODES, STANDARDS, REGULATIONS, AND LAWS.
3. ALL REFERENCED STANDARDS REFER TO THE EDITION IN FORCE AT THE TIME THESE PLANS AND SPECIFICATIONS ARE ISSUED FOR PERMIT.
4. WORK NOT INDICATED ON A PART OF THE DRAWINGS BUT REASONABLY IMPLIED TO BE SIMILAR TO THAT SHOWN AT CORRESPONDING PLACES SHALL BE REPEATED.
5. IN ANY CASE OF CONFLICT BETWEEN THE NOTES, DETAILS AND SPECIFICATIONS, THE MOST RIGID REQUIREMENTS SHALL GOVERN. CONTRACTOR SHALL MAKE NO DEVIATION FROM DESIGN DRAWINGS WITHOUT WRITTEN APPROVAL OF THE ARCHITECT.
6. THE CONTRACTOR SHALL VERIFY ALL DIMENSIONS AND CONDITIONS AND COORDINATE WITH ARCHITECTURAL DRAWINGS, DRAWINGS FROM OTHER CONSULTANTS, PROJECT SHOP DRAWINGS AND FIELD CONDITIONS.
7. THE CONTRACTOR SHALL PROTECT EXISTING FACILITIES, STRUCTURES, AND UTILITY LINES FROM ALL DAMAGE.
8. JOB SAFETY AND CONSTRUCTION PROCEDURES ARE THE RESPONSIBILITY OF THE CONTRACTOR.
9. THE BUILDING IS DESIGNED FOR THE FOLLOWING UNIFORMLY DISTRIBUTED LIVE LOADS:
   (A) SNOW LOAD – BASIC GROUND SNOW LOAD IS 30 PSF WITH APPLICABLE SNOW SHADOWING FACTORS.
   (B) WIND LOADS – DESIGN WIND SPEED: 100 MPH, EXPOSURE "C" AND IMPORTANCE FACTOR: 1.0.
   (C) SEISMIC LOADS – NOT APPLICABLE.

FOUNDATION NOTES:

1. DOWELS FROM FOOTINGS INTO PIERS AND WALLS ABOVE, SHALL BE THE SAME SIZE AND NUMBER AS VERTICAL REINFORCEMENT IN PIERS AND WALLS, AND SHALL BE EXTENDED LTE INTO FOOTINGS AND LTS INTO PIERS AND WALLS UNLESS OTHERWISE SHOWN.
2. DROP BOTTOM OF WALLS AND PIERS TO TOP OF FOOTINGS, TO OBTAIN FULL EXTENT OF CONTACT, UNLESS OTHERWISE SHOWN.
3. CENTERLINE OF FOOTINGS AND CENTERLINE OF WALLS, PIERS, COLUMNS, AND BEAMS SHALL BE THE SAME UNLESS OTHERWISE NOTED.
4. NO BACK FILLING SHALL BE DONE AGAINST FOUNDATION AND RETAINING WALLS UNTIL CONCRETE HAS ATTAINED AT LEAST 75% OF ITS 28 DAY STRENGTH. BEFORE BACK FILLING, PROVIDE BRACING FOR WALLS SUSTAINING MORE THAN 3 FEET OF EARTH PRESSURE. THIS BRACING SHALL REMAIN IN PLACE UNTIL ALL SLABS AND BEAMS FRAMING INTO WALL (INCLUDING SLAB ON GRADE) HAVE BEEN PLACED AND SET.
6. CONTRACTOR SHALL BE RESPONSIBLE TO ADEQUATELY PROTECT ALL EXCAVATION SLOPES. WHERE NECESSARY SHEETING AND SHORING OF EXCAVATION SHALL BE PROVIDED WITH ALL REQUIRED TIE BACKS AND BRACING.
7. THE MAXIMUM SLOPE BETWEEN TWO ADJACENT FOOTINGS SHALL NOT EXCEED 2 HORIZONTAL TO 1 VERTICAL.
8. COMPACTION SHALL BE CONTROLLED BY A QUALIFIED TESTING LABORATORY OR GEO–TECHNICAL ENGINEER. TAKE A MINIMUM OF ONE FIELD DENSITY TEST (ASTM D–1557 OR D–2922) FOR EACH LAYER. LOCATION OF TEST SHALL BE RANDOMLY SELECTED BY TESTING AGENCY.
9. FOOTINGS ADJACENT TO EXISTING BUILDING FOUNDATIONS SHALL BE DROPPED TO MATCH BOTTOM OF NEW FOOTING TO BOTTOM OF EXISTING.

REINFORCED CONCRETE NOTES:

1. STRUCTURAL CONCRETE AND CONCRETING PRACTICES SHALL CONFORM WITH ACI–318– 02, "AMERICAN CONCRETE INSTITUTE, BUILDING CODE FOR REINFORCED CONCRETE." DETAILS SHALL BE IN ACCORDANCE WITH ACI–135, "MANUAL OF STANDARD PRACTICE FOR DETAILING REINFORCED CONCRETE STRUCTURES" UNLESS OTHERWISE NOTED ON THE DRAWINGS.
2. ALL STRUCTURAL CONCRETE SHALL BE NORMAL WEIGHT STONE CONCRETE. CONCRETE FOR FOOTINGS, PIERS, GRADE BEAMS, FOUNDATION WALLS, PILE CAPS, SLABS ON GRADE, AND RETAINING WALLS SHALL HAVE A MINIMUM COMPRESSIVE STRENGTH OF 3000 PSI AT 28 DAYS UNLESS OTHERWISE NOTED ON THE DRAWINGS.
3. ALL EXPOSED CONCRETE SHALL HAVE AN AIR ENTRAINING AGENT.
4. ALL REINFORCING BARS SHALL CONFORM TO ASTM A615, GRADE 60.
5. WELDED WIRE FABRIC SHALL CONFORM TO ASTM A185. CHAIR OR LIFT WIRE FABRIC DURING CONCRETE PLACEMENT TO INSURE PROPER POSITION IN SLAB.
6. ALL REINFORCEMENT SHALL BE SECURELY HELD IN PLACE WHILE PLACING CONCRETE. IF REQUIRED ADDITIONAL BARS OR STIRRUPS SHALL BE PROVIDED BY THE CONTRACTOR TO FURNISH SUPPORT OR ALL BARS.
7. ALL REINFORCING BARS, SHALL BE LAPPED AS SPECIFICALLY DETAILED ON DRAWINGS. WHERE NOT SPECIFICALLY INDICATED ON THE DRAWINGS, ALL REINFORCING BARS SHALL BE LAPPED USING THE TENSION SPLICE LENGTHS IN THE SCHEDULE ON DRAWINGS. LAP WALL TOP HORIZONTAL REINFORCEMENT AT CENTER OF SPAN. LAP WALL BOTTOM HORIZONTAL REINFORCEMENT AT SUPPORT. LAP INSIDE FACE WALL VERTICAL REINFORCEMENT AT SUPPORT. LAP OUTSIDE FACE VERTICAL WALL REINFORCEMENT AT MID–HEIGHT OF WALL. UNLESS OTHERWISE NOTED TERMINATE CONTINUOUS BARS AT DISCONTINUOUS ENDS WITH STANDARD HOOKS.
8. MINIMUM CONCRETE COVER SHALL BE 3/4 INCH FOR SLABS, 1 INCH FOR WALLS AND 1–1/2 INCHES FOR COLUMNS. MINIMUM CONCRETE COVER FOR REINFORCING STEEL SHALL BE 1 INCH FOR SLABS ON GRADE AND WALLS. ALL CONCRETE EXPOSED TO WEATHER OR EARTH SHALL HAVE MINIMUM CONCRETE COVER OF 2 INCHES FOR BARS LARGER THAN #5, 1–1/2 INCHES FOR #5 BARS OR SMALLER. FOR ALL CONCRETE CAST AGAINST EARTH PROVIDE 3 INCHES COVER. ALL CONCRETE PLACED AGAINST PERMANENT SHEETING SHALL HAVE 4 INCHES COVER.
9. PROVIDE CONSTRUCTION JOINTS IN ACCORDANCE WITH ACI–318, CHAPTER 6.4. SUBMIT SHOP DRAWINGS SHOWING CONSTRUCTION JOINT LOCATIONS ALONG WITH THE SEQUENCE OF POURS FOR THE STRUCTURAL ENGINEER'S REVIEW. WALL (CONTINUOUS FOOTING) CONSTRUCTION JOINTS SHALL BE PLACED SO AS TO PROVIDE A 60 FOOT MAXIMUM LENGTH OF CONCRETE PLACEMENT.
10. NO CONCRETE TEST WILL BE ACCEPTED IF CONCRETE IS TAMPERED WITH IN ANY WAY AFTER SAID TEST IS PERFORMED. REPEAT TEST IF WATER IS ADDED AFTER INITIAL SAMPLING.
11. VERTICAL CONSTRUCTION JOINTS IN WALLS SHALL BE USED ONLY WITH PRIOR APPROVAL OF THE ENGINEER AND SHALL BE LOCATED AT LEAST EIGHT FEET FROM ANY WALL OPENING FOR FOUNDATION WALLS.
12. NO HORIZONTAL CONSTRUCTION JOINTS WILL BE PERMITTED IN BEAMS, WALLS AND SLABS UNLESS SPECIFICALLY SHOWN ON THE DRAWINGS OR APPROVED IN WRITING BY THE ENGINEER.
13. THE GENERAL CONTRACTOR SHALL PROVIDE REINFORCING STEEL ERECTOR WITH A SET OF STRUCTURAL PLANS FOR FIELD USE.
14. ALL ADJOINING SURFACES NOT CAST MONOLITHICALLY SHALL BE ROUGHENED TO 1/4 INCH AMPLITUDE FOR THE ENTIRE INTERSECTING SURFACE ACCORDING TO ACI RECOMMENDATIONS.
15. CONTRACTOR SHALL VERIFY DIMENSIONS AND LOCATIONS OF ALL OPENINGS, PIPE SLEEVES, CURBS ETC. AS REQUIRED BY OTHER TRADES BEFORE CONCRETE IS PLACED.
16. FOR LOCATION OF FLOOR DRAINS, CURBS, CONCRETE PADS AND FLOOR DEPRESSIONS SEE ARCHITECTURAL AND MECHANICAL DRAWINGS.
17. COORDINATE LOCATION OF SLOTTED INSERTS, WELDED PLATES, AND OTHER ITEMS TO BE EMBEDDED IN CONCRETE WITH ARCHITECTURAL AND MECHANICAL DRAWINGS.
18. CONTRACTOR SHALL USE RIGID TEMPLATES TO INSTALL ANCHOR BOLTS.
19. PIPES OR CONDUITS ARE NOT PERMITTED TO BE PLACED IN SLAB.
20. TYPICAL SLAB ON–GRADE REINFORCING SHALL BE AS FOLLOWS: TEMPERATURE REINFORCING 6 X 6 – W2.9 X W2.9 WELDED WIRE FABRIC.
21. CONCRETE SHALL CONTAIN A CORROSION INHIBITING ADMIXTURE. THE ADMIXTURE SHALL CONFORM TO ASTM C494, TYPE "C" AND SHALL NOT CONTAIN MORE THAN 0.05 PERCENT CHLORIDE IONS. THE ADMIXTURE SHALL BE USED AT DOSAGES OF 3 GALLONS PER CUBIC YARD OF CONCRETE. PROVIDE ONE OF THE FOLLOWING PRODUCTS:

    "RHEOCRETE CNI" BY MASTER BUILDERS
    "EUCON CIA" BY THE EUCLID CHEMICAL COMPANY
    "DAREX CORROSION INHIBITOR (DCI) BY W.R. GRACE & CO.

STRUCTURAL STEEL NOTES:

1. FABRICATION AND ERECTION OF STRUCTURAL STEEL SHALL CONFORM WITH THE AMERICAN INSTITUTE OF STEEL CONSTRUCTION, "MANUAL OF STEEL CONSTRUCTION" (LATEST EDITION) OR THE "MANUAL FOR STEEL CONSTRUCTION, LOAD AND RESISTANCE FACTOR DESIGN" (LATEST EDITION).
2. ALL STEEL DETAILS AND CONNECTIONS SHALL BE IN ACCORDANCE WITH THE REQUIREMENTS OF THE AISC "SPECIFICATIONS FOR STRUCTURAL STEEL BUILDINGS, ALLOWABLE STRESS DESIGN AND PLASTIC DESIGN", (LATEST EDITION) OR THE "MANUAL FOR STEEL CONSTRUCTION, LOAD AND RESISTANCE FACTOR DESIGN", (LATEST EDITION). BRACED FRAME CONNECTIONS SHALL BE DESIGNED IN ACCORDANCE WITH THE REQUIREMENTS OF THE AISC "SEISMIC PROVISIONS FOR STRUCTURAL BUILDINGS" 2002 EDITION.
3. ALL ROLLED SHAPES SHALL CONFORM TO ASTM STANDARD A572, GRADE 50 UNLESS SPECIFICALLY INDICATED ELSEWHERE ON OTHER DRAWINGS.
4. STEEL FOR TUBE SECTIONS SHALL COMPLY WITH ASTM A500 GRADE B, FY = 46 KSI. PIPE STEEL SHALL COMPLY WITH ASTM A 500 GR B, FY = 42 KSI.
5. ALL CONNECTION MATERIAL, BASE PLATES, ANGLES AND MISCELLANEOUS FRAMING SHALL CONFORM TO ASTM STANDARD A–36 UNLESS OTHERWISE NOTED.
6. SHOP AND FIELD CONNECTIONS NOT SPECIFICALLY DETAILED ON THE DRAWINGS MAY BE BOLTED OR WELDED.
7. WHEN NOT SPECIFICALLY DETAILED ELSEWHERE ON THE DRAWINGS, ALL BEAM TO BEAM AND BEAM TO COLUMN CONNECTIONS SHALL BE TWO SIDED WEB ANGLE CONNECTIONS.
8. ALTERNATE CONNECTIONS WILL BE ACCEPTED ONLY WITH THE 8 WRITTEN APPROVAL OF THE ENGINEER. HOWEVER, THE ENGINEER SHALL BE THE SOLE JUDGE OF ACCEPTABILITY AND THE CONTRACTOR'S BID SHALL ANTICIPATE THE USE OF THOSE SPECIFIC DETAILS SHOWN ON THE DRAWINGS. IN ANY EVENT, THE CONTRACTOR SHALL BE RESPONSIBLE FOR THE DESIGN OF SUCH ALTERNATE DETAILS WHICH HE PROPOSES.
9. WHEN INDICATED AS BOLTED ON THE DRAWINGS, ALL SHOP OR FIELD BOLTED BEAM TO BEAM CONNECTIONS SHALL BE BOLTED CONNECTIONS USING 3/4 INCH DIAMETER A325 BEARING BOLTS IN STANDARD HOLES UNLESS SPECIFICALLY NOTED OTHERWISE.
10. ALL BEAMS AND GIRDERS SHALL BE CONNECTED FOR 115% OF REACTION DENOTED BY THE SYMBOL V ON PLAN. IF NO REACTION IS GIVEN PROVIDE CONNECTIONS PER NOTE 12 BELOW.
11. ALL BEAM AND GIRDER CONNECTIONS SHALL BE A LEAST CAPABLE OF DEVELOPING THE UNIFORMLY DISTRIBUTED LOAD CAPACITY OF THE MEMBER USING THE REACTION FROM THE ALLOWABLE LOAD OF BEAM AS TABULATED IN THE MANUAL OF STEEL CONSTRUCTION PART 2, (LATEST EDITION) UNLESS NOTED OTHERWISE.
12. WHEN INDICATED AS BOLTED ON THE DRAWINGS, ALL SHOP OR FIELD BOLTED COLUMN SPLICES, COLUMN TO BEAM CONNECTIONS AND BRACING CONNECTIONS SHALL BE BEARING TYPE CONNECTIONS USING 3/4 INCH DIAMETER A325 BOLTS IN STANDARD HOLES.
13. SPLICES SHALL BE ALLOWED ONLY AT LOCATIONS SPECIFICALLY INDICATED ON THE STRUCTURAL DRAWINGS UNLESS APPROVED OTHERWISE BY THE ENGINEER IN WRITING.
14. OVERSIZED OR SLOTTED HOLES SHALL NOT BE USED FOR ANY CONNECTIONS UNLESS SPECIFICALLY INDICATED ON THE DRAWINGS OR APPROVED IN WRITING BY THE ENGINEER.
15. ALL ANCHOR RODS SHALL CONFORM TO F1554 UNLESS OTHERWISE NOTED.
16. THE STRUCTURAL STEEL CONTRACTOR SHALL COORDINATE THE BOTTOM OF BASE PLATE ELEVATION WITH THE TOP OF CONCRETE ELEVATION. IN CASE OF CONFLICT, THE CONTRACTOR SHALL MAKE ALLOWANCE IN HIS BID FOR THE MOST STRINGENT REQUIREMENTS.
17. ALL WELDS INDICATED SHALL MEET THE MINIMUM WELD SIZE SPECIFIED BY THE CURRENT AISC MANUAL OF STEEL DESIGN.
18. ALL WELDING SHALL BE PERFORMED BY QUALIFIED WELDERS IN ACCORDANCE WITH A.W.S. SPECIFICATIONS, (LATEST EDITIONS). ALL WELDING ELECTRODES SHALL CONFORM TO A.W.S. A5.1 GRADE E–70. BARE ELECTRODES AND GRANULAR FLUX SHALL CONFORM TO A.W.S. A5.17, F70 A.W.S. FLUX CLASSIFICATION.
19. PROVIDE WELDED STIFFENER PLATES ON BOTH SIDES OF THE WEB OF BEAMS AT POINTS OF CONCENTRATED LOAD.
20. THE FILLER BEAMS SHOULD BE SPACED EQUALLY BETWEEN THE SUPPORTS IF NOT OTHERWISE NOTED ON THE DRAWINGS.
21. CUTS, HOLES, COPING, ETC. REQUIRED FOR WORK OF OTHER TRADES SHALL BE SHOWN ON THE SHOP DRAWINGS AND MADE IN THE SHOP. CUTS OR BURNING OF HOLES IN STRUCTURAL STEEL MEMBERS IN THE FIELD WILL NOT BE PERMITTED.
22. STRUCTURAL DRAWINGS SHALL BE USED IN CONJUNCTION WITH ARCHITECTURAL AND MECHANICAL DRAWINGS AND DRAWINGS RELATED TO OTHER TRADES. THE GENERAL CONTRACTOR IS RESPONSIBLE TO CHECK AND COORDINATE DIMENSIONS, CLEARANCES, ETC., WITH THE WORK OF OTHER TRADES.
23. THE STRUCTURAL STEEL CONTRACTOR SHALL VERIFY AND COORDINATE THE LOCATIONS OF BEAMS AND GIRDERS AROUND ELEVATORS WITH THE ARCHITECTURAL AND MECHANICAL DRAWINGS.
24. THE CONTRACTOR SHALL PROVIDE THE ENGINEER WITH SHOP DRAWINGS TO BE APPROVED PRIOR TO FABRICATING STEEL.

HELICAL STEEL PILES

1) DESCRIPTION

HELICAL PILES SHALL BE FURNISHED AND INSTALLED TO ACHIEVE AN ULTIMATE BEARING CAPACITY OF 70 KIPS COMPRESSION. THE DESIGN CAPACITY OF THE PILES IS 35 KIPS PROVIDING A FACTOR OF SAFETY OF 2.

PILES SHALL BE CAPABLE OF PROVIDING A LATERAL RESISTANCE OF 3 KIP EACH. THE PILE CONTRACTOR SHALL SUBMIT FOR REVIEW CALCULATIONS INDICATING THE MINIMUM PILE DEPTH, HELIX DIAMETER AND REQUIRED TORQUE TO ACHIEVE THE REQUIRED LOAD BASED UPON THE SOIL BORING.

2) QUALITY ASSURANCE

a. INSTALLATION CONTRACTOR'S QUALIFICATIONS: INSTALLATION SHALL BE BY A HELICAL FOUNDATION SYSTEMS AUTHORIZED INSTALLATION CONTRACTOR.PROOF OF CURRENT CERTIFICATION BY MACLEAN–DIXIE ANCHORING SYSTEMS SHALL BE SUBMITTED TO THE OWNER OR THEIR REPRESENTATIVE PRIOR TO STARTING INSTALLATION UPON REQUEST OF THE OWNER OR THEIR REPRESENTATIVE.
b. ALL HELICAL PILES SHALL BE INSTALLED IN THE PRESENCE OF A DESIGNATED REPRESENTATIVE OF THE OWNER UNLESS THE OWNER OR THEIR REPRESENTATIVE INFORMS THE INSTALLATION CONTRACTOR OTHERWISE.
c. WELDING: PROCEDURES SHALL MEET THE REQUIREMENTS OF AWS "STRUCTURAL WELDING CODE," D1.1, LATEST EDITION. ALL WELDERS SHALL BE AWS CERTIFIED.
d. HELICAL PILE SYSTEM SHALL BE ICC–ES LISTED. THE INSTALLATION CONTRACTOR SHALL FURNISH EVIDENCE TO THE OWNER OR THEIR REPRESENTATIVE BY MEANS OF THE ICC–ES EVALUATION REPORT NUMBER PFC–5551 IF REQUIRED.
e. THE COUPLING MATERIAL SHALL CONFIRM TO AISI 8620 OR SC1045 PER ASTM A–958.

3) ALLOWABLE TOLERANCES

a. THE FOLLOWING TOLERANCES ARE SUGGESTED MAXIMUMS. THE FINAL TOLERANCES FOR A GIVEN PROJECT WILL BE ESTABLISHED PRIOR TO THE COMMENCEMENT OF THE INSTALLATION OF THE HELICAL PILES AND WILL DEPEND ON THE SPECIFIC REQUIREMENTS OF THE PROJECT.
b. THE CENTERLINE OF THE HELICAL PILES SHALL BE WITHIN 2 INCHES OF THE LOCATION AS SHOWN ON THE PLANS.
c. HELICAL PILES SHALL BE WITHIN 2 DEGREES OF DESIGN ALIGNMENT.
d. THE TOP ELEVATION OF THE HELICAL PILE SHALL BE WITHIN +1 INCH TO –1 INCH OF PLAN ELEVATION.

4) CONSTRUCTION SUBMITTALS

a. THE CONTRACTOR SHALL SUBMIT WORKING DRAWINGS FOR THE HELICAL PILES TO THE OWNER OR THEIR REPRESENTATIVE PRIOR TO THE START OF CONSTRUCTION FOR REVIEW AND APPROVAL IF REQUIRED.
b. THE CONTRACTOR SHALL SUBMIT DETAILED CONSTRUCTION PROCEDURES PROPOSED FOR USE ALONG WITH A LIST OF THE MAJOR INSTALLATION EQUIPMENT TO THE OWNER OR THEIR REPRESENTATIVE IF REQUIRED.
c. THE WORKING DRAWINGS SHALL INCLUDE THE FOLLOWING ITEMS:
   a. HELICAL PILE NUMBER AND LOCATION
   b. HELICAL PILE DESIGN LOAD
   c. TYPE AND SIZE OF SHAFT
   d. HELICAL CONFIGURATION AND DIAMETER OF HELICAL PLATES
   e. MINIMUM EFFECTIVE INSTALLATION TORQUE
   f. MINIMUM OVERALL LENGTH
   g. ANGLE OF INSTALLATION OF THE PILE, IF OTHER THAN VERTICAL
   h. PILE HEAD ELEVATION
   i. HELICAL PILE ATTACHMENT TO THE STRUCTURE
d. THE CONTRACTOR SHALL SUBMIT SHOP DRAWINGS FOR THE HELICAL PILE COMPONENTS, INCLUDING THE CORROSION PROTECTION AND PILE TOP TERMINATION DEVICE TO THE OWNER OR THEIR REPRESENTATIVE FOR REVIEW AND APPROVAL.
e. WORK SHALL NOT COMMENCE UNTIL ALL SUBMITTALS HAVE BEEN RECEIVED AND APPROVED BY THE OWNER OR THEIR REPRESENTATIVE. THE CONTRACTOR SHALLPROVIDE THE OWNER OR THEIR REPRESENTATIVE A REASONABLE AMOUNT OF TIME TO REVIEW, COMMENT, AND RETURN THE SUBMITTAL DOCUMENTS AFTER A COMPLETE SET HAS BEEN RECEIVED.

5) TERMINATION CRITERIA

a. THE TORQUE AS MEASURED DURING THE INSTALLATION SHALL NOT EXCEED THE TORQUE RATING (TORSIONAL STRENGTH) OF THE STEEL HELICAL LEAD AND EXTENSION SHAFT SECTIONS.
b. THE MINIMUM INSTALLATION TORQUE AND MINIMUM OVERALL LENGTH CRITERIA AS SHOWN ON THE WORKING DRAWINGS SHALL BE SATISFIED PRIOR TO TERMINATING THE INSTALLATION OF THE HELICAL PILE.
c. IF THE MINIMUM INSTALLATION TORQUE AS SHOWN ON THE WORKING DRAWINGS IS NOT ACHIEVED AT THE MINIMUM OVERALL LENGTH AND THERE IS NO MAXIMUM OVERALL LENGTH CONSTRAINT, THE INSTALLATION CONTRACTOR SHALL HAVE THE FOLLOWING OPTIONS:
d. INSTALL THE HELICAL PILE DEEPER USING ADDITIONAL EXTENSION SECTIONS,

   OR
e. REMOVE THE EXISTING HELICAL PILE AND INSTALL A NEW PILE WITH ADDITIONAL AND/OR LARGER DIAMETER HELICAL PLATES. THIS NEW PILE CONFIGURATION SHALL BE SUBJECT TO REVIEW BY AND ACCEPTANCE OF THE OWNER OR THEIR REPRESENTATIVE. IF THE NEW PILE IS INSTALLED AT THE SAME LOCATION AS THE ORIGINAL PILE, THEN THE TOP MOST HELIX OF THE NEW HELICAL PILE SHALL BE TERMINATED AT LEAST THREE TIMES THE DIAMETER OF TOP MOST HELIX OF THE NEW PILE BEYOND THE TERMINATION DEPTH OF THE ORIGINAL PILE, OR
f. DERATE THE LOAD CAPACITY OF THE HELICAL PILE AND INSTALL ADDITIONAL HELICAL PILE(S). THE DERATED CAPACITY AND ADDITIONAL HELICAL PILE LOCATION(S) SHALL BE SUBJECT TO THE REVIEW BY AND ACCEPTANCE OF THE OWNER OR THEIR REPRESENTATIVE.
g. IF THE HELICAL PILE REACHES REFUSAL OR IS DEFLECTED BY A SUBSURFACE OBSTRUCTION, THE INSTALLATION SHALL BE TERMINATED AND THE HELICAL PILE REMOVED. THE OBSTRUCTION SHALL BE REMOVED, IF FEASIBLE, AND THE HELICAL PILE SHALL BE REINSTALLED. IF THE OBSTRUCTION CANNOT BE REMOVED, THE HELICAL PILE SHALL BE INSTALLED AT AN ADJACENT LOCATION SUBJECT TO REVIEW BY AND ACCEPTANCE OF THE OWNER OR THEIR REPRESENTATIVE.
h. THE CONTRACTOR SHALL MAINTAIN A WRITTEN INSTALLATION RECORD FOR EACH HELICAL PILE. THIS RECORD SHALL INCLUDE INFORMATION AS NOTED IN SECTION 2.2 INSTALLATION RECORDS.

END OF SPECIFICATION

ROUGH CARPENTRY

1. WOOD FRAMING SHALL CONFORM TO AND BE ERECTED IN ACCORDANCE WITH THE LATEST RECOMMENDATIONS OF THE NATIONAL DESIGN SPECIFICATIONS FOR WOOD CONSTRUCTION AND THE AMERICAN INSTITUTE OF TIMBER CONSTRUCTION.
2. ALL WOOD FRAMING IN CONTACT WITH CONCRETE, MASONRY AND/OR SUBJECT TO EXTERIOR EXPOSURE SHALL BE ACQ PRESERVATIVE TREATED IN ACCORDANCE WITH AWPA STANDARDS C2.
3. JOIST HANGERS, FRAMING ANGLES AND CLIPS SHALL BE EQUAL TO THOSE MANUFACTURED BY THE SIMPSON STRONG–TIE COMPANY.
4. FRAMING MEMBERS SHALL BE SECURELY FASTENED TOGETHER AND TO SUPPORTING CONSTRUCTION; NAILED, SPIKED, LAG SCREWED OR BOLTED AS REQUIRED.
5. ALL WOOD FRAMING EXPOSED TO WEATHER, IN CONTACT WITH THE GROUND OR IN AREAS WITH HIGH RELATIVE HUMIDITY; PROVIDE FASTENERS AND ANCHORS WITH A HOT–DIP ZINC COATING (ASTM A153)
6. DOUBLE STUD WALL OPENINGS, DOOR AND WINDOW JAMBS. USE THREE STUDS AT CORNERS.
7. ALL NAILED CONNECTIONS SHALL BE SECURED IN ACCORDANCE WITH STATE OF CONNECTICUT BASIC BUILDING CODE NAILING SCHEDULE.
8. FOR BOLTED CONNECTIONS, DRILL HOLES 1/16" LARGER IN DIAMETER THAN THE BOLTS BEING USED. USE WASHERS UNDER ALL NUTS.
9. FOR LAG–SCREWS AND WOOD SCREWS, PRE–BORE HOLES SAME DIAMETER AS ROOT OF THREADS; ENLARGE HOLES TO SHANK DIAMETER FOR LENGTH OF SHANK. SCREW, DO NOT DRIVE, ALL LAG SCREWS AND WOOD SCREWS.
10. ROOF SHEATHING SHALL BE INSTALLED WITH LONG DIMENSION (FACE GRAIN)PERPENDICULAR TO SUPPORTING MEMBER AND ATTACHED WITH 8d COMMON NAILS AT 6"O.C. AT EDGES AND 12"O.C. AT INTERMEDIATE SUPPORT. REDUCE INTERMEDIATE NAIL SPACING TO 6"O.C. WITHIN 8'–0" OF ROOF RIDGES, EAVES, HIPS AND GABLE ENDS. PROVIDE & INSTALL 20 GA. GALV SHEATHING CLIPS AT MID SPAN OF PLYWOOD SHEATHING BET SUPPORTING MEMBERS.
11. WALL SHEATHING SHALL ATTACHED WITH 10d COMMON NAILS AT 6" O.C. AT PERIMETER & EDGES & ENDS, AND 12" O.C. AT INTERMEDIATE SUPPORTS.

SCHEDULE OF SPLICE LENGTH

BAR SIZE	COMPRESSION	TENSION (fc=4,000psi)			
	LAP SPLICE LENGTH	LAP SPLICE LENGTH			
		TOP BARS		OTHER BARS	
		CATEGORY SEE NOTE 1 BELOW		CATEGORY SEE NOTE 1 BELOW	
		I	II	I	II
#3	12"	24"	36"	19"	28"
#4	15"	36"	48"	25"	37"
#5	19"	40"	60"	31"	46"
#6	23"	48"	72"	37"	55"
#7	27"	70"	105"	54"	81"
#8	30"	80"	120"	62"	92"
#9	34"	90"	136"	70"	104"
#10	39"	102"	153"	78"	117"
#11	43"	113"	170"	87"	130"
NOT USED ON DWG.	• LCS	• LTS & LTE			

"LCS" = LAP COMPRESSION SPLICE LENGTH
"LTS" = LAP TENSION SPLICE LENGTH
"LTE" = TENSION EMBEDMENT LENGTH

NOTES FOR SCHEDULES OF SPLICE LENGTH:

1. THE SCHEDULES BELOW INCLUDES SPLICE LENGTHS WHICH SATISFY THE PROJECT REQUIREMENTS AND THE FOLLOWING CRITERIA.

   fy=60,000psi
   CONCRETE WEIGHT = 150lb/cu.ft.

   TENSION SPLICE LENGTHS ARE DIVIDED INTO TWO CATEGORIES WHICH SHALL BE APPLIED AS FOLLOWS:

   CATEGORY I; CLEAR SPACING OF BARS BEING DEVELOPED OR SPLICED NOT LESS THAN db, CLEAR COVER NOT LESS THAN db, AND BEAM STIRRUPS OF COLUMN TIES THROUGHOUT Ld NOT LESS THAN THE CODE MINIMUM OR CLEAR SPACING OF BARS BEING DEVELOPED OR SPLICED NOT LESS THAN 2db & CLEAR COVER NOT LESS THAN db.

   CATEGORY II; BARS NOT COVERED BY CATEGORY I.
2. USE COMPRESSION LAP SPLICE LENGTH (LCS) AT ALL COLUMN SPLICE LOCATIONS NOT SPECIFICALLY DETAILED AND UNLESS INDICATED OTHERWISE ON PLANS OR DETAIL. USE TENSION SPLICE FOR ALL OTHER SPLICES (UNLESS OTHERWISE SHOWN ON DRAWINGS).
3. THE STANDARD LAP SPLICE (0.0005 x fy x D) IS USED FOR COMPRESSION IN SPLICES AND CLASS "B" SPLICE IS USED FOR TENSION SPLICES. THE CONTRACTOR MAY SUBMIT LESSER SPLICE LENGTHS FOR REVIEW AND APPROVAL AT THE SAME TIME PROVIDING THE FOLLOWING INFORMATION:
   A. DETAILS PREPARE AND SUBMITTED BY THE CONTRACTOR INDICATING LOCATION AND PROPOSED LAYOUT OF REBARS AND LENGTHS OF SPLICES.
   B. WHERE THE SIZE AND NUMBER OF TIES OR SPIRALS PERMITS THE REDUCTION OF LAP LENGTH, THOSE BARS SHALL BE INDICATED ON THE DETAILS.
   C. WHERE COMPUTED STRESS VALUES PERMIT THE REDUCTION OF LAP LENGTH, COMPUTATIONS SHALL BE SUBMITTED FOR REVIEW.
   D. THE APPLICABLE SECTION OF THE ACI–95 CODE PERMITTING THE LESSER SPLICE LENGTH SHALL BE INDICATED IN THE SUBMITTED MATERIAL.
4. TOP BARS ARE HORIZONTAL BARS PLACED SO THAT MORE THAN 12 INCHES OF CONCRETE IS CAST IN THE MEMBER BELOW THE BAR.

STRUCTURE RAISING PROCEDURE RECOMMENDATIONS:

1) GROUT EXISTING CMU BLOCK SOLID PER DETAILS ON S–3 ALLOW A MINIMUM 14 DAY CURE TIME PRIOR TO RAISING.
2) INSTALL L8X6X¾" LINTEL ANGLES AT THE CMU WALL PERIMETER PRE DETAILS ON S–3.
3) INSTALL W12 GIRDERS/NEEDLE BEAMS, W12 OUTRIGGERS & W8 BEAMS PER DETAILS ON S–3.
4) INSTALL RIM JOISTS AS REQUIRED PER DETAILS.
4) W–SECTION GIRDERS/NEEDLE BEAMS, W12 OUTRIGGERS & W8 BEAMS ARE DESIGNED TO BE UTILIZED DURING THE LIFTING PROCESS AND SHALL REMAIN AS PERMANENT SUPPORTS.
5) AFTER RAISING STRUCTURE INSTALL CHANNELS PER DETAILS ON S–3.

Coastal Materials Testing Lab, LLC
10 Hart Street
West Haven, CT 06516
Phone: 203-691-5966

CLIENT: Amaya Architects | SHEET 1 OF 1 | HOLE NO. B-1
PROJECT NO. G106-054-15
PROJECT NAME 32 Field Court | BORING LOCATIONS per Plan
FOREMAN - DRILLER BD/mc | LOCATION Milford, CT
INSPECTOR
GROUND WATER OBSERVATIONS: AT 4 FT AFTER 0 HOURS; AT __ FT AFTER __ HOURS

	CASING	SAMPLER	CORE BAR
TYPE	HSA	SS	
SIZE I.D.	3 ¾"	1 3/8"	
HAMMER WT.		140#	BIT
HAMMER FALL		30"	

OFFSET; DATE START 5/7/15; DATE FINISH 5/7/15; SURFACE ELEV.; GROUND WATER ELEV.

DEPTH	CASING BLOWS PER FOOT	NO	Type	PEN	REC	DEPTH @ BOT	BLOWS 0-6	BLOWS 6-12	BLOWS 12-18	CORE TIME PER FT (MIN)	DENSITY OR CONSIST / MOIST	STRATA CHANGE DEPTH / ELEV	FIELD IDENTIFICATION OF SOIL REMARKS INCL. COLOR, LOSS OF WASH WATER, SEAMS IN ROCK, ETC.
		1	ss	24"	18"	2'0"	5	8			dry		lt brn FMC SAND, sm F gravel
							12	30			compact		
		2	ss	24"	18"	4'0"	12	18			dry		SAME
							18	21			dense		
5		3	ss	24"	12"	6'0"	5	11			wet		brn M-C SAND, sm F gravel
							15	22			compact		
		4	ss	24"	18"	8'0"	30	14			wet		brn FMC SAND, tr F gravel
							13	19			compact		
		5	ss	24"	24"	10'0"	13	18			wet		gry FMC SAND
10							20	22			dense		
		6	ss	24"	12"	12'0"	8	10			wet		SAME
							12	51			compact		
15													
		7	ss	24"	16"	17'0"	14	8			wet		gry FM SAND
							8	10			compact		
		8	ss	24"	18"	19'0"	8	8			wet		
							10	14			compact	19'0"	SAME
20												20'0"	drk brn ORGANIC SILT
		9	ss	24"	12"	22'0"	5	9			wet		gry SILT
							13	24			v stiff		
25													
		10	ss	24"	14"	27'0"	13	18			wet		brn/reddish SILT
							19	27			hard		
30													
		11	ss	24"	14"	32'0"	20	24			wet		brn SILT
							26	27			hard		
35													
		12	ss	24"	18"	37'0"	30	26			wet		SAME
							26	31			hard	37'0"	
													E.O.B. 37'0"
40													

NOTE: Subsoil conditions revealed by this investigation represent conditions at specific locations and may not represent conditions at other locations or times.

GROUND SURFACE TO ____ FT. USED ______ CASING THEN ____ CASING TO ____ FT. | HOLE NO. B-1
A = AUGER UP = UNDISTURBED PISTON T = THINWALL V = VANE TEST
WOR = WEIGHT OF RODS WOH = WEIGHT OF HAMMER & RODS C = COARSE
SS = SPLIT TUBE SAMPLER H.S.A. = HOLLOW STEM AUGER M = MEDIUM
PROPORTIONS USED: TRACE = 0 - 10% LITTLE = 10 - 20% SOME = 20 - 35% AND =35 - 50% F = FINE

Coastal Materials Testing Lab, LLC
10 Hart Street
West Haven, CT 06516
Phone: 203-691-5966

CLIENT: Amaya Architects | SHEET 1 OF 1 | HOLE NO. B-2
PROJECT NO. G106-054-15
PROJECT NAME 32 Field Court | BORING LOCATIONS per Plan
FOREMAN - DRILLER BD/mc | LOCATION Milford, CT
INSPECTOR
GROUND WATER OBSERVATIONS: AT 9 FT AFTER 0 HOURS; AT __ FT AFTER __ HOURS

	CASING	SAMPLER	CORE BAR
TYPE	HSA	SS	
SIZE I.D.	3 ¾"	1 3/8"	
HAMMER WT.		140#	BIT
HAMMER FALL		30"	

OFFSET; DATE START 5/7/15; DATE FINISH 5/7/15; SURFACE ELEV.; GROUND WATER ELEV.

DEPTH	CASING BLOWS PER FOOT	NO	Type	PEN	REC	DEPTH @ BOT	BLOWS 0-6	BLOWS 6-12	BLOWS 12-18	CORE TIME PER FT (MIN)	DENSITY OR CONSIST / MOIST	STRATA CHANGE DEPTH / ELEV	FIELD IDENTIFICATION OF SOIL REMARKS INCL. COLOR, LOSS OF WASH WATER, SEAMS IN ROCK, ETC.
		1	ss	24"	12"	2'0"	7	9			dry		lt brn FMC SAND, sm F gravel
							11	19			compact		
		2	ss	24"	14"	4'0"	30	20			dry		SAME
							21	22			dense		
5		3	ss	24"	12"	6'0"	7	7			moist		lt brn FM SAND, lit C sand
							6	7			compact		
		4	ss	24"	13"	8'0"	9	10			moist		drk brn FM SAND, tr C sand
							13	14			compact		
		5	ss	24"	14"	10'0"	9	13			moist		lt brn FM SAND, tr C sand
10							15	21			compact		
		6	ss	24"	14"	12'0"	5	4			wet		gry F SAND, sm M sand, tr C sand
							9	16			compact		
15													
		7	ss	24"	12"	17'0"	15	13			wet		brn FM SAND, sm C sand
							8	12			compact		
20													
		8	ss	24"	16"	22'0"	4	6			moist	21'0"	
							7	18			stiff		blk ORGANIC SILT
25													
		9	ss	24"	18"	27'0"	16	15			wet		gry SILTY CLAY
							16	15			hard		
30													
		10	ss	24"	24"	32'0"	7	12			wet		brn SILT
							17	14			v stiff		
35													
		11	ss	24"	18"	37'0"	15	15			wet		SAME
							16	17			hard	37'0"	
													E.O.B. 37'0"
40													

NOTE: Subsoil conditions revealed by this investigation represent conditions at specific locations and may not represent conditions at other locations or times.

GROUND SURFACE TO ____ FT. USED ______ CASING THEN ____ CASING TO ____ FT. | HOLE NO. B-2
A = AUGER UP = UNDISTURBED PISTON T = THINWALL V = VANE TEST
WOR = WEIGHT OF RODS WOH = WEIGHT OF HAMMER & RODS C = COARSE
SS = SPLIT TUBE SAMPLER H.S.A. = HOLLOW STEM AUGER M = MEDIUM
PROPORTIONS USED: TRACE = 0 - 10% LITTLE = 10 - 20% SOME = 20 - 35% AND =35 - 50% F = FINE

STATE OF CONNECTICUT
LICENSED PROFESSIONAL ENGINEER
EDWARD G. SHELDON
9266

NORTH

Amaya Architects
American Institute of Architects
284 RACEBROOK RD.
ORANGE, CT 06477
TEL (203) 795 5656
FAX (203) 799 3871

SMEP Consultant:
Loureiro
Engineering • Construction • EH&S • Energy • Waste
Loureiro Engineering Associates, Inc.
100 Northwest Drive
Plainville, Connecticut 06062
Phone: 860-747-6181 / Fax: 860-747-8822
An Employee Owned Company
email : info@loureiro.com
Comm No. 01MH4.21

Sheet Title:
STRUCTURAL DETAILS

APPLICATION # 2243

ENGLANDER RESIDENCE
32 Field Court
Milford, Connecticut 06460

STATE OF CONNECTICUT
DEPARTMENT OF HOUSING
COMMUNITY DEVELOPMENT BLOCK GRANT
DISASTER RECOVERY PROGRAM
(CDBG-DR)

Date: 12-01-15
Revision 1: 02-22-16

Job Number:
Drawn By: JRO
Approved By: EGS

Sheet Number:
S-1

G:\AUTOCAD\PROJECTS\01MH421 32 FIELD COURT\DWGS\REVISED DWGS\01MH421 S-1_OPTION 1.DWG Tab: S-1 Saved: 2/22/2016 12:47 PM Plotted: 2/22/2016 12:55 PM

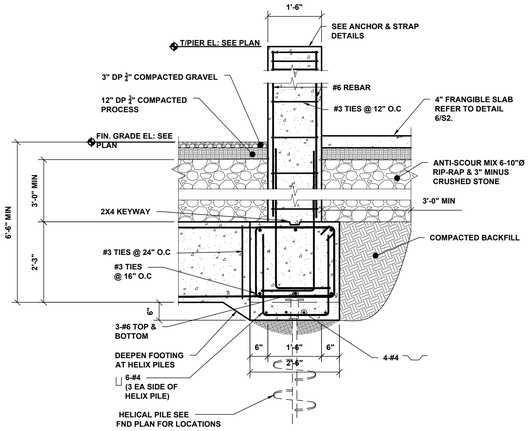

2 FND SECTION @ PIER
1/2"=1'-0"

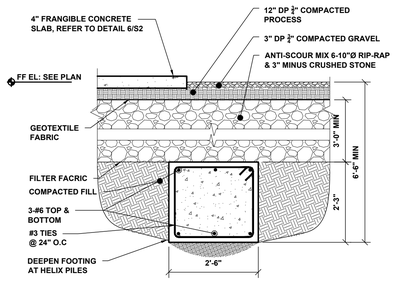

3 FND SECTION
1/2"=1'-0"

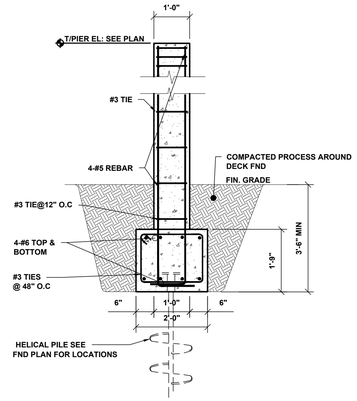

4 DECK FND SECTION @ PIER
1/2"=1'-0"

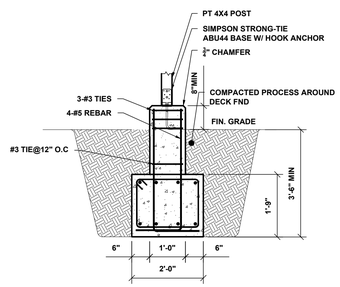

5 DECK FND SECTION @ PIER
1/2"=1'-0"

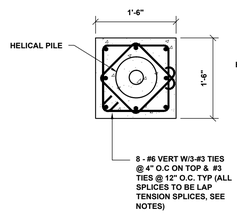

FND PIER (P-1)

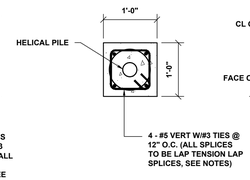

FND PIER (P-2)

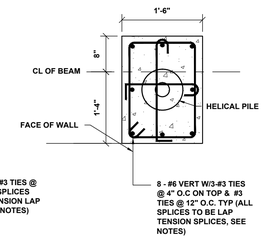

FND PIER (P-3)

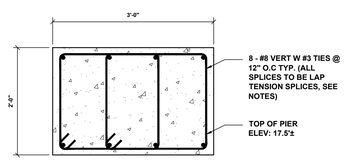

FND PIER FOR ELEVATOR RAIL SUPPORT

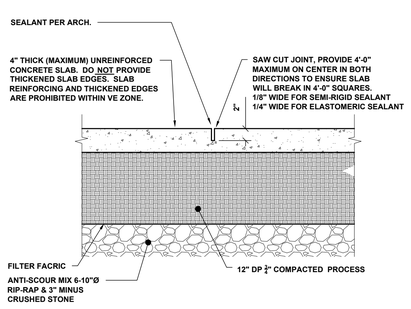

6 TYP. FRANGIBLE SLAB DETAIL
1"=1'-0"

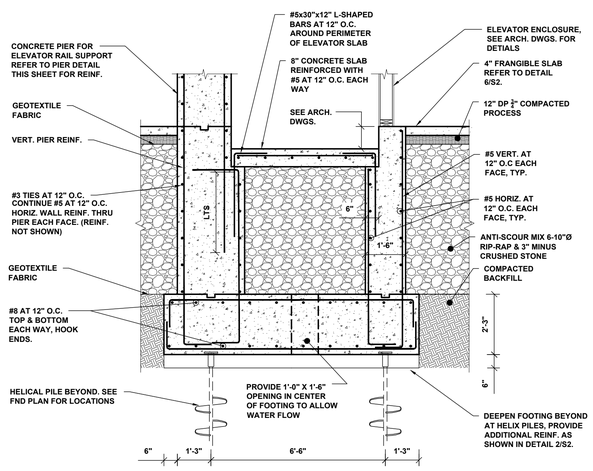

7 SECTION AT ELEVATOR PIT
3/8"=1'-0"

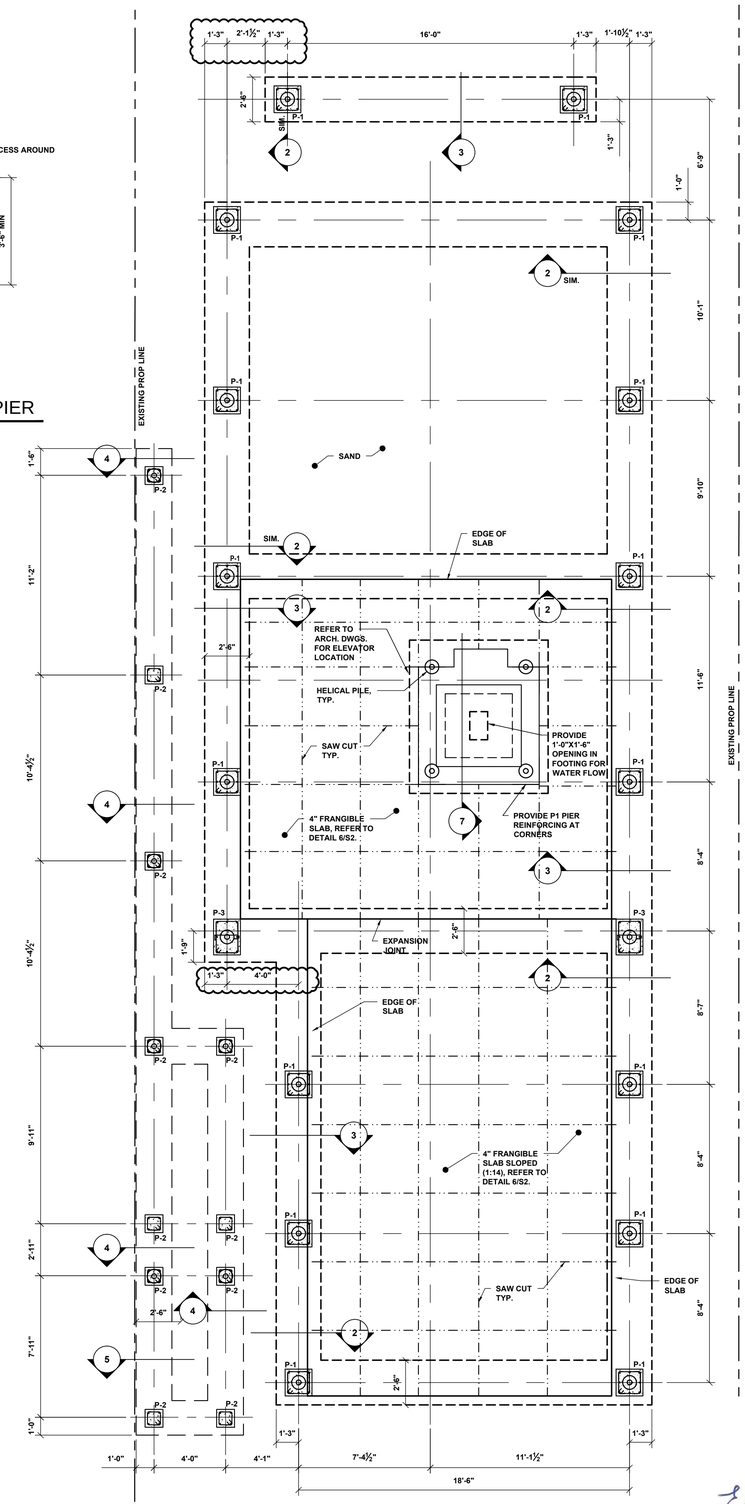

1 FOUNDATION PLAN
1/4"=1'-0"

Amaya Architects
American Institute of Architects

284 RACEBROOK RD.
ORANGE, CT 06477

TEL (203) 795 5656
FAX (203) 799 3871

SMEP Consultant:

Loureiro
Engineering • Construction • EH&S • Energy • Waste

Loureiro Engineering Associates, Inc.
100 Northwest Drive
Plainville, Connecticut 06062
Phone: 860-747-6181 / Fax: 860-747-8822
An Employee Owned Company
email : info@loureiro.com
Comm No. 01MH4.21

Sheet Title:
STRUCTURAL PLANS AND DETAILS

APPLICATION # 2243

ENGLANDER RESIDENCE
32 Field Court
Milford, Connecticut 06460

STATE OF CONNECTICUT
DEPARTMENT OF HOUSING
COMMUNITY DEVELOPMENT BLOCK GRANT
DISASTER RECOVERY PROGRAM
(CDBG-DR)

Date: 12-01-15
Revision 1.: 02-22-16

Job Number:
Drawn By: JRO
Approved By: EGS

Sheet Number:
S-2

G:\AUTOCAD\PROJECTS\01MH4.21 32 FIELD COURT\DWGS\REVISED DWGS\01MH4.21 S-2.3_OPTION 1.DWG Tab: S-2 Saved: 2/22/2016 12:40 PM PlotHost: 2/22/2016 12:55 PM

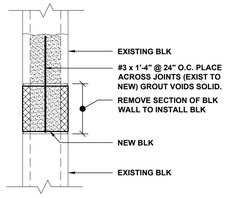

10 SECTION 10
1"=1'-0"

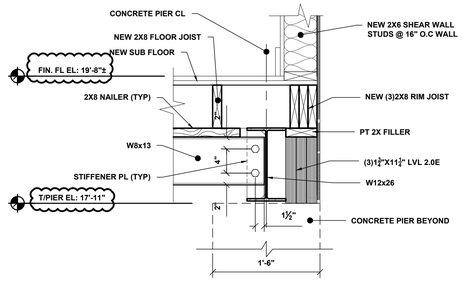

9 RIM JOIST FRAMING - SECTION
1"=1'-0"

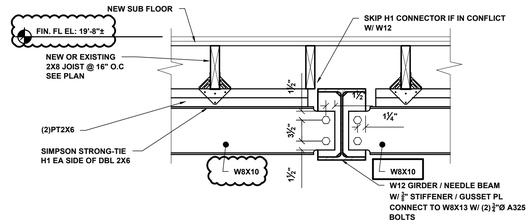

8 STEEL FRAMING CONNECTION - DETAIL
1"=1'-0"

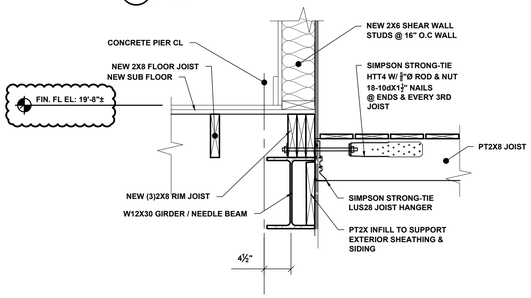

7 RIM JOIST FRAMING @ PIER & DECK - SECTION
1"=1'-0"

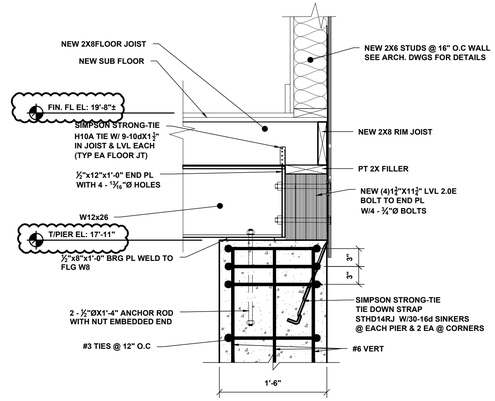

6 RIM JOIST FRAMING @ PIER - SECTION
1"=1'-0"

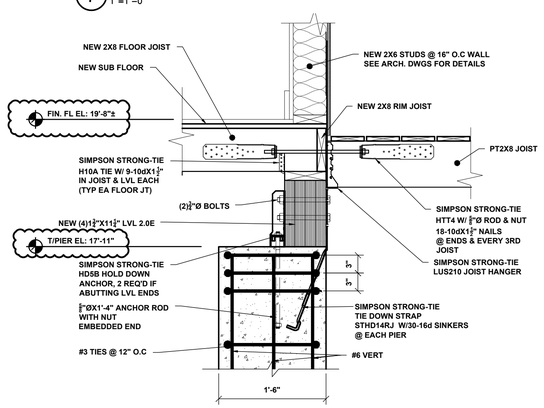

5 RIM JOIST FRAMING @ PIER & DECK - SECTION
1"=1'-0"

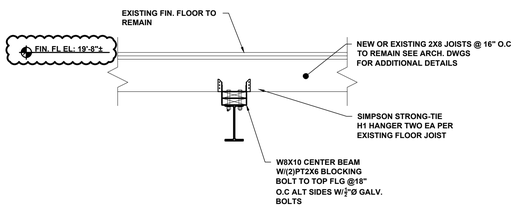

4 STEEL SUBFRAME @ CENTER BEAM - SECTION
3/4"=1'-0"

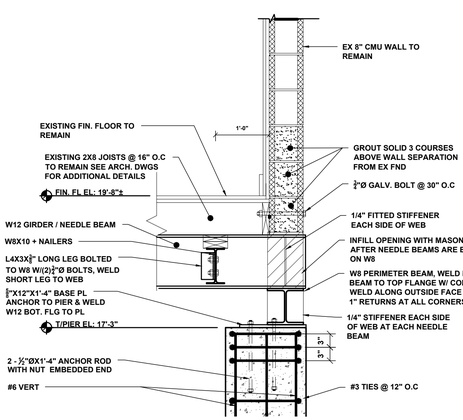

3 3A STEEL SUBFRAME @ EX CMU WALL - SECTION
3/4"=1'-0"

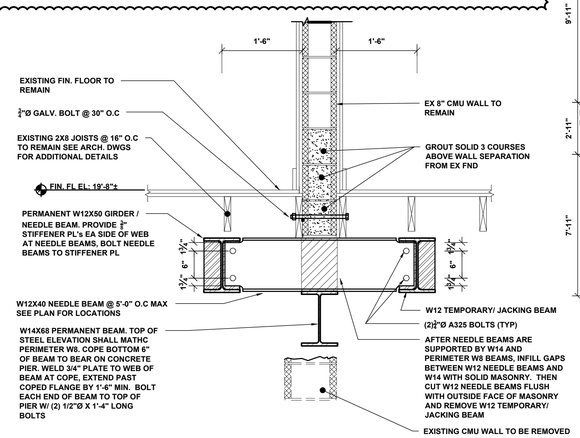

2 STEEL SUBFRAME @ EX CMU WALL - SECTION
3/4"=1'-0"

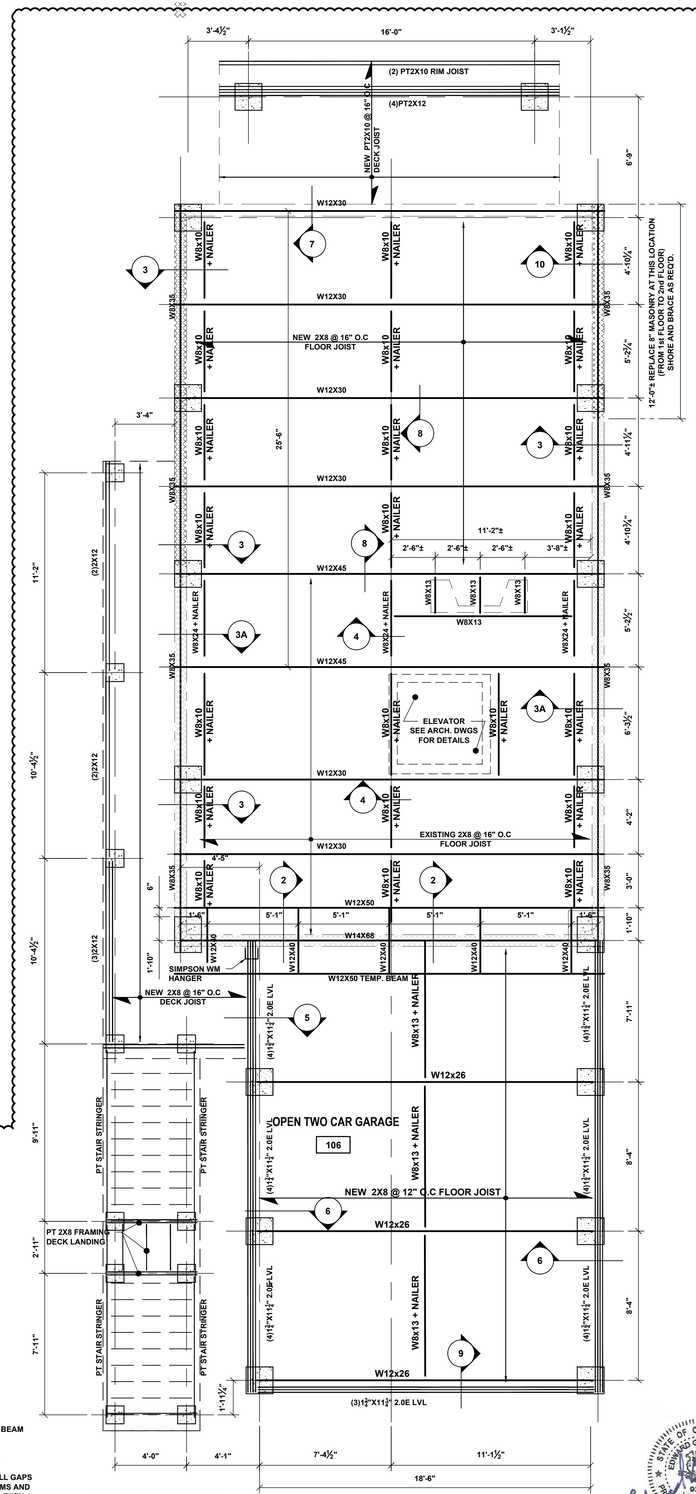

NOTE: PROVIDE SIMPSON JOIST HANGERS FOR ALL CONNECTIONS.

1 FIRST FLOOR FRAMING PLAN
1/4"=1'-0"
SEE STRUCTURE RAISING RECOMMENDATIONS ON SHEET S-1

NORTH

Amaya Architects
American Institute of Architects

284 RACEBROOK RD.
ORANGE, CT 06477

TEL (203) 795 5656
FAX (203) 799 3871

SMEP Consultant:

Loureiro
Engineering • Construction • EH&S • Energy • Waste

Loureiro Engineering Associates, Inc.
100 Northwest Drive
Plainville, Connecticut 06062
Phone: 860-747-6181 / Fax: 860-747-8822
An Employee Owned Company
email : info@loureiro.com
Comm No. 01MH4.21

Sheet Title:
STRUCTURAL PLANS AND DETAILS

APPLICATION # 2243

ENGLANDER RESIDENCE
32 Field Court
Milford, Connecticut 06460

STATE OF CONNECTICUT
DEPARTMENT OF HOUSING
COMMUNITY DEVELOPMENT BLOCK GRANT
DISASTER RECOVERY PROGRAM
(CDBG-DR)

Date: 12-01-15
Revision 1 PERMIT 02-22-16

Job Number:
Drawn By: JRO
Approved By: EGS

Sheet Number:
S-3

G:\AUTOCAD\PROJECTS\01MH421 32 FIELD COURT\DWGS\ARCHISED DWGS\01MH421 S-2.3_OPTION 1.DWG Tab: S-3 Saved: 2/22/2016 12:40 PM Plotted: 2/22/2016 12:55 PM