OORR PROGRAM
DeLuca Residence
411 Blohm Street
Hamden, CT
Project #: 2140

July 17, 2014

BID # 2140

BID PACKAGE
FOR
REHABILITATION/RECONSTRUCTION WORK TO
DELUCA RESIDENCE
411 BLOHM STREET
WEST HAVEN, CONNECTICUT

ENGINEERS: DIVERSIFIED TECHNOLOGY CONSULTANTS

ADDENDUM NO. 1

THE FOLLOWING SHALL BE INCORPORATED INTO THE WORK.

1. RADIANT ROOF SHEATHING PANELS
   ACCEPTABLE MANUFACTURE: HUBERWOOD, ZIP SYSTEM RADIANT PANEL ROOF BARRIERS ARE ACCEPTABLE PRODUCTS WHEN MEETING ALL REQUIREMENTS OF THE DESIGN BASED PRODUCTS.

2. CONTRACTOR SHALL INSTALL LSU/LSSU CLIPS BY SIMPSON STRONG-TIE AT THE CONNECTION OF EACH JACK RAFTER AT THE VALLEY. SELECT APPROPRIATE CLIP TO FIT CONNECTION. SEE ATTACHED PRODUCT INFORMATION.

3. CONTRACTOR SHALL DRILL ONE 2” VENT HOLE IN THE CONCEALLED 1” TRIM FASCIA TO THE SOFFIT. DRILL ONE HOLE AT EACH BAY OF THE ROOF RAFTERS TO FACILITATE VENTILATION IN EACH RAFTER BAY.

4. CONTRACTOR PRE-BID WALK-THROUGH SIGN-IN SHEET IS PROVIDED FOR YOUR USE.

THE BID DATE AND TIME IS NOT CHANGED BY THIS ADDENDUM

CONTRACTORS SHALL ACKNOWLEDGE THIS ADDENDUM ON THE BID FORM

END OF ADDENDUM NO. 1.

LSU/LSSU *Adjustable Light Slopeable/Skewable U Hangers*

SIMPSON Strong-Tie®

VALUE ENGINEERED

This product is preferable to similar connectors because of a) easier installation, b) higher loads, c) lower installed cost, or a combination of these features.

The LSU and LSSU series of hangers may be sloped and skewed in the field, offering a versatile solution for attaching joists and rafters. These hangers may be sloped up or down and skewed left or right, up to 45°.

MATERIAL: See table

FINISH: Galvanized. Some products available in ZMAX® coating; see Corrosion Information, page 14-15.

INSTALLATION:

- Use all specified fasteners. See General Notes.
- Attach the sloped joist at both ends so that the horizontal force developed by the slope is fully supported by the supporting members.
- To see an installation video on this product, visit ***www.strongtie.com***.

CODES: See page 13 for Code Reference Key Chart.

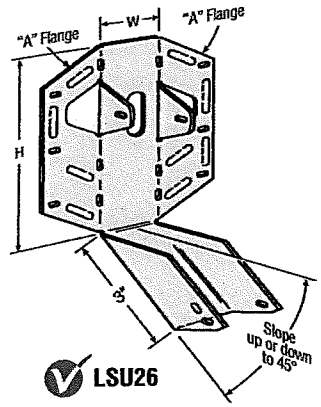

LSU26

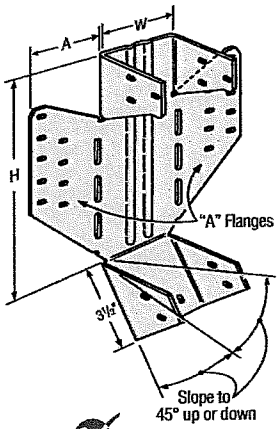

LSSU410
(LSSU210-2 similar)

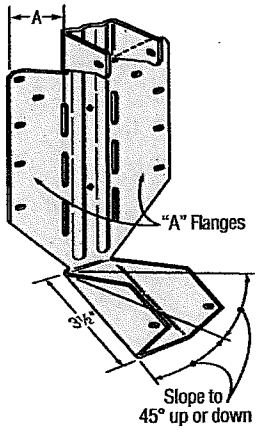

LSSU28

LSU and LSSU INSTALLATION SEQUENCE

(For Skewed or Sloped/Skewed Applications)

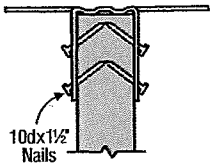

STEP 1
Nail hanger to slope-cut carried member, installing seat nail first. No bevel necessary for skewed installation. Install joist nails at 45° angle.

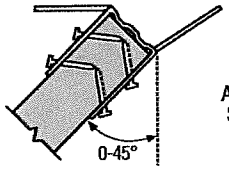

STEP 2
Skew flange from 0-45°. Bend other flange back along centerline of slots until it meets the header. Bend one time only.

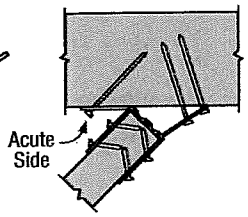

STEP 3
Attach hanger to the carrying member, acute angle side first *(see footnote 4)*. Install nails at an angle.

These products are available with additional corrosion protection. Additional products on this page may also be available with this option, check with Simpson Strong-Tie for details.

Joist Width	Model No.	Ga	Dimensions W	Dimensions H	Dimensions A	Fasteners Face	Fasteners Joist	DF/SP Allowable Loads Uplift[2] (160)	DF/SP Floor (100)	DF/SP Snow (115)	DF/SP Roof (125)	SPF/HF Allowable Loads Uplift[2] (160)	SPF/HF Floor (100)	SPF/HF Snow (115)	SPF/HF Roof (125)	Code Ref.
Sloped Only Hangers																
1½	LSU26	18	1 9/16	4⅞	1½	6-10d	5-10dx1½	535	695	810	865	415	600	695	745	I8, F7, L15
1½	LSSU28	18	1 9/16	7⅛	1½	10-10d	5-10dx1½	535	1110	1275	1390	415	960	1105	1200	
1½	LSSU210	18	1 9/16	8½	1⅝	10-10d	7-10dx1½	875	1110	1275	1390	625	960	1105	1200	
2½	LSSUH310	16	2 9/16	8½	3⅛	18-16d	12-10dx1½	1150	2295	2295	2295	990	1930	1930	1930	170
3	LSSU210-2	16	3⅛	8½	2⅞	18-16d	12-10dx1½	1150	2430	2795	3035	990	2160	2485	2700	I8, F7, L15
3½	LSSU410	16	3 9/16	8½	2⅝	18-16d	12-10dx1½	1150	2430	2795	3035	990	2160	2485	2700	
Skewed Hangers or Sloped and Skewed																
1½	LSU26	18	1 9/16	4⅞	1½	6-10d	5-10dx1½	535	695	810	865	415	600	695	745	I8, F7, L15
1½	LSSU28	18	1 9/16	7⅛	1½	9-10d	5-10dx1½	450	885	885	885	415	765	765	765	
1½	LSSU210	18	1 9/16	8½	1⅝	9-10d	7-10dx1½	785	995	1145	1205	625	860	995	1050	
2½	LSSUH310	16	2 9/16	8½	3⅛	14-16d	12-10dx1½	1150	1600	1600	1600	990	1385	1385	1385	170
3	LSSU210-2	16	3⅛	8½	2⅞	14-16d	12-10dx1½	1150	1625	1625	1625	990	1365	1365	1365	I8, F7, L15
3½	LSSU410	16	3 9/16	8½	2⅝	14-16d	12-10dx1½	1150	1625	1625	1625	990	1365	1365	1365	

1. Roof loads are 125% of floor loads unless limited by other criteria.
2. Uplift loads include an increase for wind or earthquake loading with no further increase allowed; reduce when other loads govern.
3. Truss chord cross-grain tension may limit allowable loads in accordance with ANSI/TPI 1-2007. Simpson Strong-Tie® Connector Selector™ Software includes the evaluation of cross-grain tension in its hanger allowable loads. For additional information, contact Simpson Strong-Tie.
4. For skewed LSSU hangers, the inner most face fasteners on the acute angle side are not installed.
5. Do not substitute 10dx1½" nails for face nails on slope and skew combinations or skewed only LSU and LSSU.
6. **NAILS:** 16d = 0.162" dia. x 3½" long, 10d = 0.148" dia. x 3" long, 10dx1½ = 0.148" dia. x 1½" long. See page 22-23 for other nail sizes and information.

C-2013 © 2013 SIMPSON STRONG-TIE COMPANY INC. PRINTED 12/12

Pg. 1

DTC ATTENDANCE: Mike Casey
Scott Feldner

PRE-BID MEETING SIGN IN SHEET – Department of Housing (CDBG-DR / OORR)

DELUCA – 411 BLOHM STREET, WEST HAVEN CT **PROJECT NO. 2140**
Address

MANDATORY PRE-BID MEETING: ***Wednesday July 9, 2014 @ 10:30AM***

START TIME: 10:30 AM
END TIME: 11:05 AM

PRINT NAME	SIGNATURE	COMPANY NAME/AFFILIATION ADDRESS STATE, ZIP CODE	PHONE – FAX - EMAIL	
JC PAUL		VASE MGT	(area code) PHONE NO.	(203) 435 4455
			(area code) FAX NO.	
			EMAIL	HOLLYWOODCOMCAST.NET
BILL Martin	William Martin	GOSHEN EXCAVATORS	(area code) PHONE NO.	518-701-5457
			(area code) FAX NO.	
			EMAIL	WMARTIN12517@gmail.com
Paul Judson		DSW Homes	(area code) PHONE NO.	409-939-3344
			(area code) FAX NO.	
			EMAIL	paul.judson@dswhomes.com
Peter Kenicky		Retirion/Stormguard	(area code) PHONE NO.	8602888586
			(area code) FAX NO.	
			EMAIL	frontdesk.stormguard@gmail.com
BRUCE SMALL		Vase Mgt.	(area code) PHONE NO.	203-671-7834
			(area code) FAX NO.	
			EMAIL	CRYSTALproBRUCE@optonline.net

PRE-BID MEETING SIGN IN SHEET – Department of Housing (CDBG-DR / OORR)

DELUCA – 411 BLOHM STREET, WEST HAVEN CT **PROJECT NO. 2140**
Address

MANDATORY PRE-BID MEETING: ***Wednesday July 9, 2014 @ 10:30AM***

PRINT NAME	SIGNATURE	COMPANY NAME/AFFILIATION ADDRESS STATE, ZIP CODE	PHONE – FAX - EMAIL	
Jon Clark		East Coast Wall Systems & Restorations	(area code) PHONE NO.	860 803-1704
			(area code) FAX NO.	
			EMAIL	JCLARK@EASTCOASTWS.COM
Ron Everett		Vase Management	(area code) PHONE NO.	203 981 3725
			(area code) FAX NO.	
			EMAIL	VEE@VASEMANAGEMENT.COM
Albert Cabral		Hightower Commercial Services LLC	(area code) PHONE NO.	203-515-1196
			(area code) FAX NO.	
			EMAIL	AL@Hightower-Group.com
Kenneth Warner & Sons Inc		65-3 N. Beach Beaufort Ct 06405	(area code) PHONE NO.	
			(area code) ~~FAX NO.~~	
			EMAIL	
			(area code) PHONE NO.	203-982-3781
			(area code) FAX NO.	
			EMAIL	KWARNERSONS@Email.com