Copyright © 2014 Capital Studio Architects, LLC

THE STATE OF CONNECTICUT
DEPARTMENT OF HOUSING (DOH)
COMMUNITY DEVELOPMENT BLOCK GRANT - DISASTER RECOVERY (CDBG-DR)
OWNER OCCUPIED REHABILITATION and REBUILDING PROGRAM (OORR)

June 19, 2015

csa project 1347-12

Issued for:
Bidding and Construction

QUI TRANSTULIT SUSTINET

Carlson Residence Reconstruction
Application No. 1939
39 Attawan Avenue
Niantic, CT 06357

PROJECT SITE

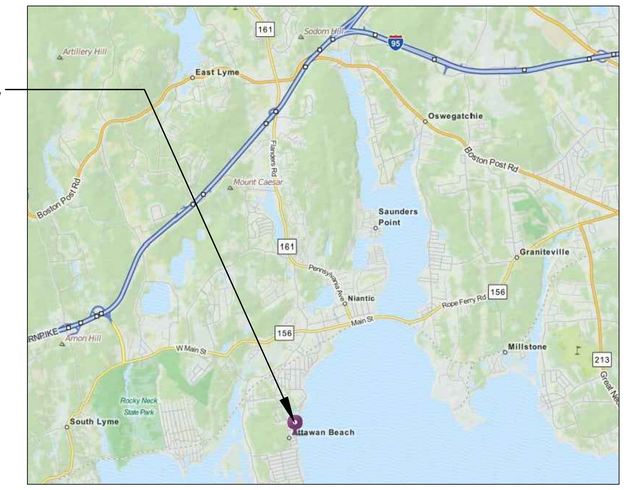

LOCATION PLAN
not to scale

Drawing List

Title Sheet	
A-0.0	GENERAL INFORMATION
C-1	PLOT PLAN
S-1.0	FOUNDATION PLAN and SECTIONS
S-2.0	FRAMING PLANS
S-2.1	FRAMING PLANS
S-3.0	SECTIONS and NOTES
A-1.0	FLOOR PLANS
A-1.1	FLOOR PLANS
A-2.0	ELEVATIONS
A-2.1	SOUTH ELEVATION
A-2.2	NORTH ELEVATION
A-3.0	BUILDING SECTION
A-3.1	BUILDING SECTIONS
A-3.2	BUILDING SECTION
A-3.3	BUILDING SECTION
A-7.0	SCHEDULES
P-1.0	PLUMBING FLOOR PLANS
P-1.1	PLUMBING FLOOR PLANS
P-5.0	PLUMBING SCHEDULES, DETAILS and SPECIFICATIONS
M-1.0	MECHANICAL FLOOR PLANS
M-1.1	MECHANICAL FLOOR PLANS
M-5.0	MECHANICAL SCHEDULE and DETAILS
M-5.1	MECHANICAL SPECIFICATIONS
E-1.1	ELECTRICAL FLOOR PLANS
E-1.2	ELECTRICAL FLOOR PLANS
E-5.0	ELECTRICAL SCHEDULES
E-5.1	ELECTRICAL SPECIFICATIONS

Architect
Capital Studio Architects, LLC
1379 Main Street
East Hartford, Connecticut 06108
tel: 860.289.3262 fax: 860.289.3163

Environmental Consultant
Eagle Environmental, Inc.
8 South Main Street, Suite 3
Terryville, Connecticut 06786
tel: 860.589.8257 fax: 860.585.7034

MEP Engineer
Consulting Engineering Services
811 Middle Street
Middletown, CT 06457
tel: 860.632.1682 fax: 860.632.1768

Civil / Site Engineer
Design Professionals, Inc.
PO Box 1167
425 Sullivan Avenue
South Windsor, CT 06074
tel: 860.291.8755 fax: 860.291.8757

Structural Engineer
William M. Lapoint, PE
1379 Main Street
East Hartford, CT 06108
tel: 860.622.0840

Copyright © 2015 Capital Studio Architects, LLC

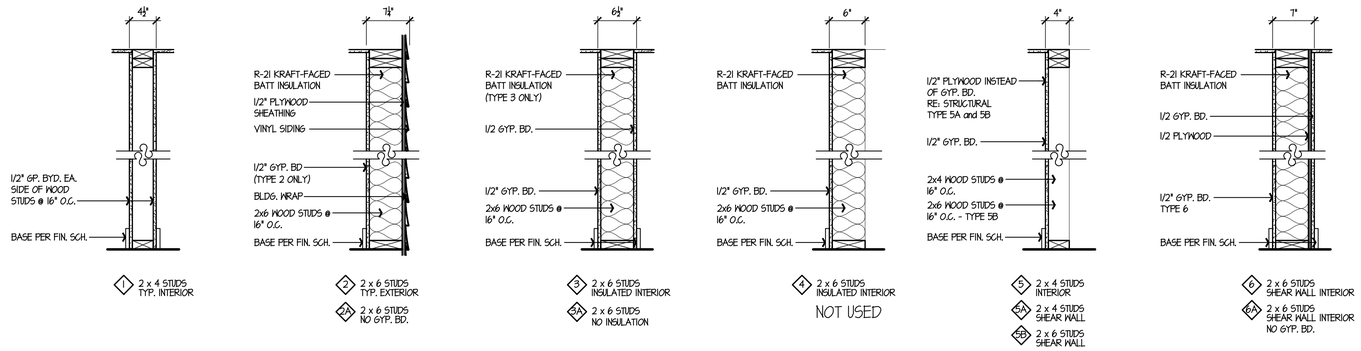

5 / A-0.0 PARTITION TYPES

NO SCALE

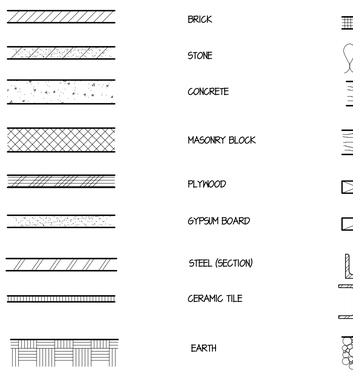

4 / A-0.0 MATERIALS LEGEND

NO SCALE

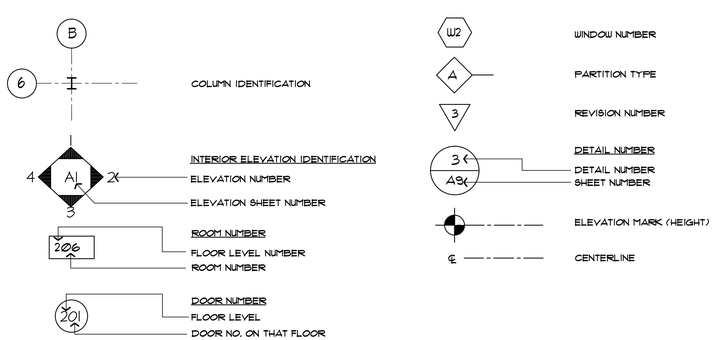

3 / A-0.0 SYMBOLS LEGEND

NO SCALE

A.C.T.	ACOUSTICAL CEILING TILE
ACOUST.	ACOUSTIC
ALT.	ALTERNATE
ALUM.	ALUMINUM
ARCH.	ARCHITECTURAL
ASB.	ASBESTOS
A.T.	ASPHALT TILE
@	AT
B.C.	BRICK COURSE
BD.	BOARD
B.F.	BOTTOM OF FOOTING
BLDG.	BUILDING
CAB.	CABINET
C/C	CENTER TO CENTER
C.T.	CERAMIC TILE
C.J.	CONTROL JOINT
C.L.	CENTER LINE
CLG.	CEILING
C.O.	CASED OPENING
COL.	COLUMN
COMP.	COMPACTED
CONC.	CONCRETE
CONN.	CONNECTION
CONT.	CONTINUOUS
CORR.	CORRIDOR
CSK.	COUNTERSINK
D.F.	DRINKING FOUNTAIN
DET.	DETAIL
DWG.	DRAWING
DN.	DOWN
DP.	DAMPPROOFING
ELECT.	ELECTRICAL
E.J.	EXPANSION JOINT
ELEV.	ELEVATION (ELEVATOR)
E.P.	ELECTRICAL PANEL
EQUIP.	EQUIPMENT
E.W.C.	ELECTRIC WATER COOLER
EXP.	EXPANSION
F.A.P.	FIRE ALARM PANEL
F.D.	FLOOR DRAIN
F.E.	FIRE EXTINGUISHER
F.H.C.	FIREHOSE CABINET
FIN.	FINISH
FL.	FLOOR
F/M	FACE OF MASONRY
F/F	FACE OF FRAMING
FDN	FOUNDATION
F.R.	FIRE RATED
FTG.	FOOTING
G.M.U.	GLAZED MASONRY UNIT
GWB	GYPSUM WALLBOARD
GALV.	GALVANIZED
GL.	GLASS
GLZ.	GLAZING
GYP. BD.	GYPSUM WALL BOARD
HGT.	HEIGHT
H.M.	HOLLOW METAL
H.P.	HIGH POINT
HDWD.	HARDWOOD
HDWR.	HARDWARE
I.D.	INSIDE DIAMETER
INSUL.	INSULATION
JAN.	JANITOR
JT.	JOINT
LAM.	LAMINATED
L.P.	LOW POINT
LCKR.	LOCKER
MAS.	MASONRY
MAT.	MATERIAL
MAX.	MAXIMUM
M.C.	MASONRY COURSE
MECH.	MECHANICAL
MEM.	MEMBRANE
MFR.	MANUFACTURER
MIN.	MINIMUM
MIR.	MIRROR
MISC.	MISCELLANEOUS
M.O.	MASONRY OPENING
N.I.C.	NOT IN CONTRACT
NO.	NUMBER
N.T.S.	NOT TO SCALE
O/C	ON CENTER
O.D.	OUTSIDE DIAMETER
OPNG.	OPENING
OPP.	OPPOSITE
PERF.	PERFORATED
P.T.	PRESSURE TREATED
R.	RISER (RADIUS)
R.B.	RUBBER BASE
REF.	REFERENCE
REINF.	REINFORCING
R.L.	RAIN LEADER
RM.	ROOM
SIM.	SIMILAR
SPEC.	SPECIFICATION
STL.	STEEL
STRUCT.	STRUCTURAL
STOR.	STORAGE
SUSP.	SUSPENDED
TERR.	TERRAZZO (TERRACE)
T&G.	TONGUE AND GROOVE
THRESH.	THRESHHOLD
T.	TREAD
T/S	TOP OF SLAB
T/STL	TOP OF STEEL
T/W	TOP OF WALL
TYP.	TYPICAL
U.N.O.	UNLESS NOTED OTHERWISE
V.C.T.	VINYL COMPOSITE TILE
V.B.	VINYL BASE
VERT.	VERTICAL
VEST.	VESTIBULE
V.I.F.	VERIFY IN FIELD
V.W.C.	VINYL WALL COVERING
W/	WITH
W.C.	WATER CLOSET
WD.	WOOD
WIND.	WINDOW
W.P.	WATERPROOFING

2 / A-0.0 ABBREVIATIONS

NO SCALE

1. ALL WORK SHALL BE DONE IN STRICT ACCORDANCE WITH APPLICABLE STATE OF CONNECTICUT BUILDING AND FIRE CODES AND SAFETY CODES. BEFORE WORK BEGINS CONTRACTOR IS TO CONTACT CALL BEFORE YOU DIG AT 1-800-922-4455 TO LOCATE ALL UNDERGROUND UTILITIES.
2. WORK PERMITS SHALL BE THE CONTRACTOR'S RESPONSIBILITY. THE CONTRACTOR SHALL SECURE ALL REQUIRED LOCAL AND STATE OF CONNECTICUT PERMITS PRIOR TO COMMENCING WORK. ALL COSTS OF SECURING PERMITS SHALL BE PAID BY THE OWNER.
3. ALL MATERIALS AND EQUIPMENT THAT WILL BE USED IN THE CONSTRUCTION OF THIS PROJECT ARE SUBJECT TO THE APPROVAL OF THE OWNER. ALL MATERIALS AND EQUIPMENT REQUIRED BY NOTES OR SPECIFICATIONS SHALL BE SUBMITTED IN THE FORM OF SAMPLES AND SHOP DRAWINGS FOR APPROVAL BY ARCHITECT. WHERE COLOR SELECTIONS ARE MADE, COMPLETE SAMPLES SHALL BE FURNISHED TO THE ARCHITECT.
4. ALL EXISTING OR NEW CONSTRUCTION DISTURBED OR DAMAGED DURING THE COURSE OF THIS WORK SHALL BE RESTORED TO MATCH EXISTING ADJACENT SURFACES OR ORIGINAL CONSTRUCTION.
5. PRECAUTION MUST BE EXERCISED AT ALL TIMES FOR THE PROTECTION OF PERSONS AND PROPERTY. THE SAFETY PROVISIONS OF APPLICABLE LAWS AND CONSTRUCTION CODES MUST BE OBSERVED. CONTRACTOR SHALL TAKE OR CAUSE TO BE TAKEN SUCH ADDITIONAL SAFETY AND HEALTH MEASURES AS ARE REASONABLY NECESSARY. MACHINERY, EQUIPMENT AND OTHER HAZARDS GUARDED IN ACCORDANCE WITH SAFETY PROVISIONS OF THE "MANUAL OF ACCIDENT PREVENTION IN CONSTRUCTION" PUBLISHED BY THE ASSOCIATED GENERAL CONTRACTORS OF AMERICA, TO THE EXTENT THAT SUCH PROVISIONS ARE NOT IN CONTRADICTION OF APPLICABLE LAWS.
6. IT SHALL BE THE RESPONSIBILITY OF THE CONTRACTOR TO PROTECT AND PRESERVE IN OPERATIONAL CONDITION ALL UTILITIES TRAVERSING THE WORK AREA. DAMAGE TO ANY UTILITY DUE TO WORK UNDER THIS CONTRACT SHALL BE REPAIRED TO THE SATISFACTION OF THE OWNER AT NO ADDITION COST TO THE OWNER. UTILITY SHUT DOWNS MUST BE COORDINATED WITH THE OWNER.
7. EACH BIDDER WILL BE HELD TO HAVE EXAMINED THE PREMISES AND SATISFIED HIMSELF WITH THE CONDITIONS WHICH WOULD IN ANY MANNER AFFECT THE WORK UNDER THE CONTRACT AND NO LATER CLAIMS FOR EXTRA COMPENSATION FOR LABOR, MATERIALS AND EQUIPMENT WHICH COULD HAVE BEEN FORSEEN BY SUCH EXAMINATION WILL BE RECOGNIZED.
8. THE CONTRACTOR SHALL TAKE ALL NECESSARY MEASUREMENTS FOR HIS WORK AT THE SITE AND SHALL VERIFY ALL MEASUREMENTS AND DIMENSION GIVEN ON THE DRAWINGS. DO NOT SCALE DRAWINGS.
9. DO NOT PROCEED WITH CHANGE IN SCOPE OF WORK WITHOUT WRITTEN APPROVAL FROM OWNER OR ARCHITECT.
10. ALL DEMOLITION SHOWN ON THESE DRAWINGS IS DIAGRAMMATIC. CONTRACTOR IS RESPONSIBLE FOR ALL DEMOLITION AND RELOCATION WORK NECESSARY TO PROPERLY COMPLETE THE PROJECT, REGARDLESS IF DEMOLITION WORK IS SHOWN OR NOT ON DRAWINGS.
11. THE CONTRACTOR IS RESPONSIBLE FOR LEGAL DISPOSAL OF ALL CONSTRUCTION WASTE AND REMOVED ELEMENTS, UNLESS NOTED OTHERWISE ON DRAWINGS. DEBRIS SHALL BE DISPOSED OF ON A DAILY BASIS.
12. THE CONTRACTOR SHALL PROVIDE ALL STRUCTURAL SHORING, BRACING AND SHEATHING AS REQUIRED FOR SAFETY AND FOR PROPER EXECUTION OF WORK AND HAVE SAME REMOVED WHEN WORK IS COMPLETED.
13. THE OWNER RETAINS THE RIGHT TO SALVAGE ANY DEMOLISHED OR CONTRACTOR REMOVED MATERIAL(S). CONTACT OWNER BEFORE REMOVAL FROM SITE

1 / A-0.0 GENERAL CONSTRUCTION and DEMOLITION NOTES

NO SCALE

CAPITAL STUDIO
architects LLC
1379 MAIN STREET EAST HARTFORD CT. 06108
860.289.3262 fax 860.289.3163

THE STATE OF CONNECTICUT DEPARTMENT OF HOUSING (DOH) COMMUNITY DEVELOPMENT BLOCK GRANT - DISASTER RECOVERY (CDBG-DR) OWNER OCCUPIED REHABILITATION and REBUILDING PROGRAM (OORR)

CARLSON RESIDENCE APPLICATION No. 1939
39 Attawan Avenue
Niantic, CT 06357

date	description	no.

revisions

GENERAL INFORMATION

A-0.0

date	19 JUNE 2015
drawn	NWF
scale	AS SHOWN
checked	PM/JP/KG
project no.	1347-12
application no.	1939

Zoning Information

ZONE: R-2 Residential

ITEM	REQUIRED	EXISTING CONDITIONS	PROPOSED CONDITIONS
Minimum Lot Area	12,000 s.f.	4,851 s.f.*	4,851 s.f.
Minimum Lot Frontage	80 feet	143.5 feet	143.5 feet
Minimum Street Line Setback	30 feet	12.1 feet*	12.26 feet
Minimum Property Line Setback	15 feet	9.2 feet*	10.27 feet
Maximum Building Height	30 feet		35.5 feet±**
Maximum Lot Coverage	25%	30.7%*	28.8%

* Existing non-conformity

** Requesting Variance

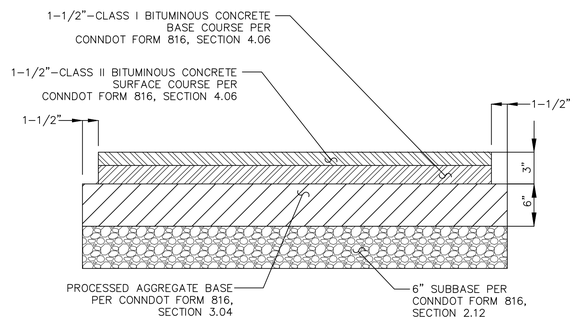

BITUMINOUS CONCRETE PAVEMENT SECTION

N.T.S.

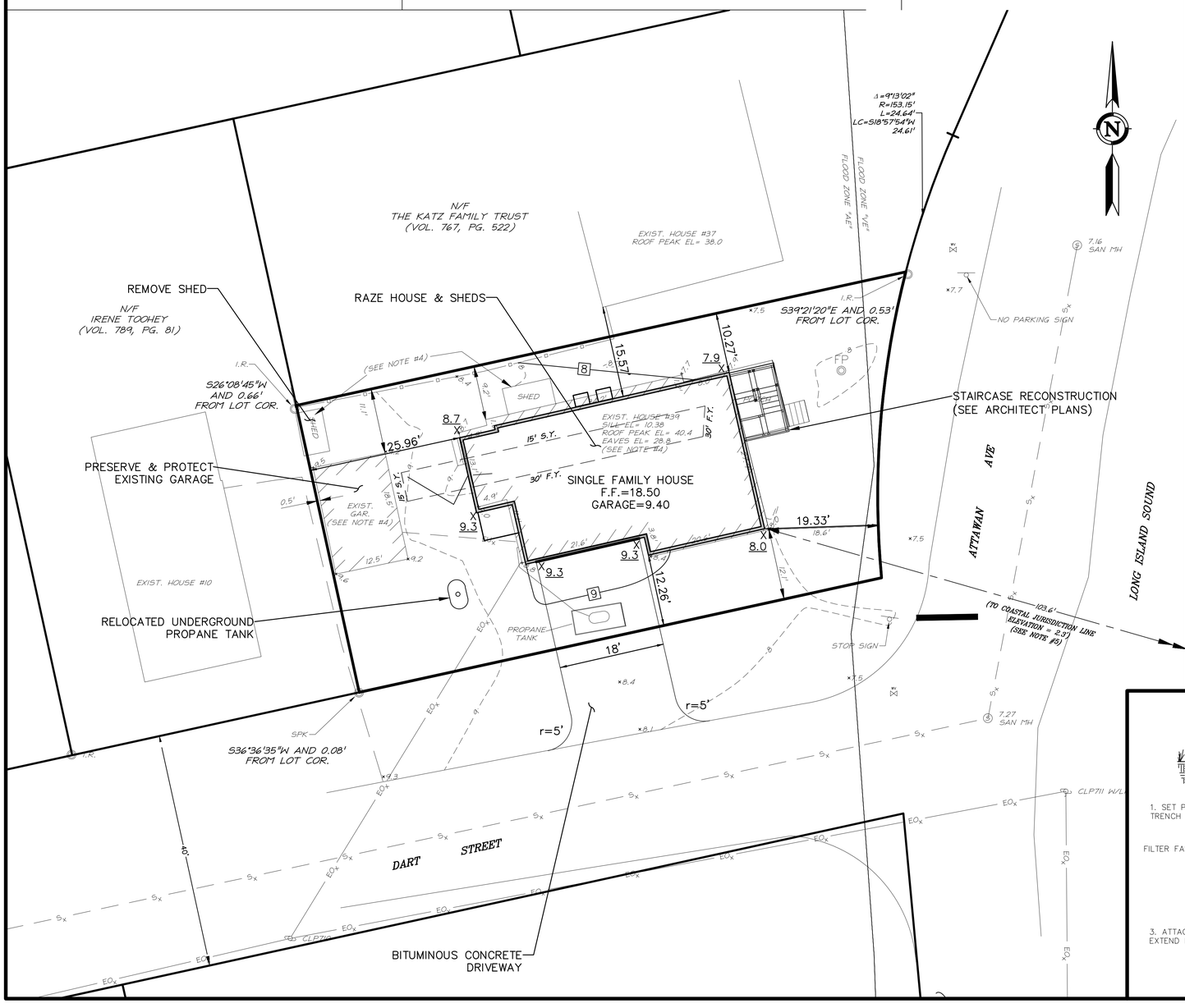

LEGEND

EXISTING	DESCRIPTION
COMMUNICATION	
C_X	OVERHEAD COMM. LINES (CABLE, TEL, ETC.)
DOMESTIC WATER	
W_X	WATER MAIN
WS_X	WATER SERVICE
	WATER VALVE
	FIRE HYDRANT
LIGHTING	
	POLE MOUNTED LIGHT
NATURAL GAS	
G_X	GAS MAIN
POWER	
EO_X	ELECTRICAL LINES, OVERHEAD
EU_X	ELECTRICAL LINES, UNDERGROUND
	UTILITY POLE
PROPERTY	
	PROPERTY LINE
	IRON PIN
	MONUMENT
ROADS	
	GUARD RAIL
SITE FEATURES	
X X	BARBED WIRE FENCE
	CHAIN LINK FENCE
	RAIL FENCE
	STOCKADE FENCE
+ +	WIRE FENCE
OR	TREE
	TREE LINE
SANITARY SEWER	
S_X	SANITARY SEWER MAIN
	SANITARY SEWER MANHOLE
STORM SEWER	
D_X	STORM DRAIN PIPE
	STORM DRAIN MANHOLE
	CURB INLET
	CATCH BASIN
TOPOGRAPHY	
95	CONTOUR
X61.95	SPOT ELEVATION
WETLANDS	
	WETLANDS LINE

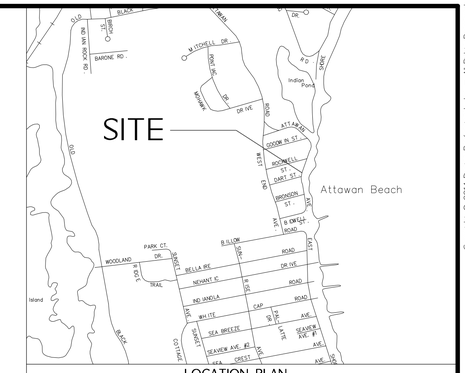

LOCATION PLAN

SCALE: 1"=1,000'

NOTES:

1. PROPERTY IS IN THE R-12 ZONE.
2. PARCEL CONTAINS 4,851 SQUARE FEET OR 0.111 ACRES.
3. HORIZONTAL CONTROL IS BASED ON THE NORTH AMERICAN DATUM OF 1983/2012 (NAD 83/2012) AND VERTICAL CONTROL IS BASED ON THE NORTH AMERICAN VERTICAL DATUM OF 1988 (NAVD 88).
4. LOT IS NON-CONFORMING TO CURRENT ZONING REGULATIONS WITH RESPECT TO HEIGHT, SIDE AND FRONT YARD REQUIREMENTS.
5. THE ELEVATION OF THE COASTAL JURISDICTION LINE IN EAST LYME IS 2.3. THIS ELEVATION IS BASED ON INFORMATION IN: "THE CONNECTICUT ASSOCIATION OF LAND SURVEYORS RESOURCES FOR TIDAL AND NAVIGABLE WATERS IN CONNECTICUT BY JOHN J. DOODY, PS & PE CHAIR, CALS TIDE COMMITTEE FIRST PRINTING OCTOBER 15, 2012".
6. PROPERTY DOES FALL WITHIN THE LIMITS OF A FLOOD HAZARD ZONE VE (EL=14) AND ZONE AE (EL=14) AS DEPICTED ON: "FIRM FLOOD INSURANCE RATE MAP TOWN OF EAST LYME, CONNECTICUT, NEW LONDON COUNTY, PANEL 487 OF 554, COMMUNITY PANEL NUMBER 0901IC0487J, EFFECTIVE DATE: AUGUST 5, 2013. PREPARED BY FEDERAL EMERGENCY MANAGEMENT AGENCY FEDERAL INSURANCE ADMINISTRATION.
7. UNDERGROUND UTILITY, STRUCTURE AND FACILITY LOCATIONS DEPICTED AND NOTED HEREON HAVE BEEN COMPILED, IN PART, FROM RECORD MAPPING SUPPLIED BY THE RESPECTIVE UTILITY COMPANIES OR GOVERNMENTAL AGENCIES, FROM PAROLE TESTIMONY AND FROM OTHER SOURCES. THESE LOCATIONS MUST BE CONSIDERED AS APPROXIMATE IN NATURE. ADDITIONALLY, OTHER SUCH FEATURES MAY EXIST ON THE SITE, THE EXISTENCE OF WHICH ARE UNKNOWN TO DESIGN PROFESSIONALS, INC. THE SIZE, LOCATION AND EXISTENCE OF ALL SUCH FEATURES MUST BE FIELD DETERMINED AND VERIFIED BY THE APPROPRIATE AUTHORITIES PRIOR TO CONSTRUCTION.
8. CONTRACTOR SHALL CONTACT "CALL BEFORE YOU DIG" FOR UNDERGROUND UTILITY MARKING AT LEAST TWO FULL WORKING DAYS PRIOR TO START OF CONSTRUCTION: 1-800-922-4455 OR WWW.CBYD.COM.

MAP REFERENCES:

1. MAP SHOWING ALLOTMENT OF ATTAWAN BEACH BY THE WEST LAND COMPANY, 902 MAIN STREET, HARTFORD, CONNECTICUT, SCALE: 1"=100', APRIL 1901. PREPARED BY C.B. VOISE, ENGINEER.
2. LAYOUT OF STREETS AND AVENUES AT ATTAWAN BEACH, EAST LYME, CONNECTICUT, SCALE: 1"=50', JULY 1960, REVISED AUGUST 25, 1960. PREPARED BY PAYNE AND NEILAN.

SURVEY NOTES:

1. THIS SURVEY AND MAP HAS BEEN PREPARED PURSUANT TO THE REGULATIONS OF CONNECTICUT STATE AGENCIES SECTIONS 20-300b-1 THRU 20-300b-20 AND THE "STANDARDS FOR SURVEYS AND MAPS IN THE STATE OF CONNECTICUT" AS ADOPTED BY THE CONNECTICUT ASSOCIATION OF LAND SURVEYORS, INC. ON SEPTEMBER 26, 1996.
   - TYPE OF SURVEY IS AN IMPROVEMENT LOCATION SURVEY - RECORD - AND IS INTENDED TO DEPICT THE LOCATION OF IMPROVEMENTS RELATIVE TO PROPERTY LINES.
   - THIS IS A DEPENDENT RESURVEY BASED ON MAP REFERENCE #1.
   - HORIZONTAL ACCURACY MEETS CLASS A-2 STANDARDS AND VERTICAL ACCURACY MEETS CLASS T-2 STANDARDS.

TO MY KNOWLEDGE AND BELIEF, THIS MAP IS SUBSTANTIALLY CORRECT AS NOTED HEREON.

LAWRENCE R. GEISSLER, JR., L.S. — 12327 LIC. NO.

SEDIMENTATION AND EROSION CONTROL:

1. ALL EROSION CONTROL MEASURES SHALL BE CONSTRUCTED IN ACCORDANCE WITH THE "GUIDELINES FOR SOIL EROSION AND SEDIMENT CONTROL" BY THE CONNECTICUT COUNCIL FOR SOIL AND WATER CONSERVATION.
2. EROSION AND SEDIMENTATION CONTROL MEASURES SHALL BE INSTALLED PRIOR TO CONSTRUCTION, AND SHALL BE MAINTAINED OR REPLACED AS NECESSARY.
3. CONTRACTOR IS RESPONSIBLE FOR IMPLEMENTATION AND MAINTENANCE OF ALL SEDIMENTATION AND EROSION CONTROL MEASURES SHOWN ON THESE PLANS. ANY PROPOSED CHANGES TO THIS PLAN MUST BE APPROVED BY THE ENGINEER AND/OR THE TOWN OF BRANFORD.
4. CONTRACTOR SHALL BE RESPONSIBLE FOR SWEEPING EXISTING ROADS & DRIVEWAYS AS DEEMED NECESSARY.
5. AREAS TO BE LEFT BARE FOR MORE THAN 15 DAYS SHALL BE TREATED WITH AIR DRIED WOOD CHIP MULCH OR SEEDED WITH PERENNIAL RYE-GRASS, UNTIL FINAL GRADING AND STABILIZATION EFFORTS TAKE PLACE.

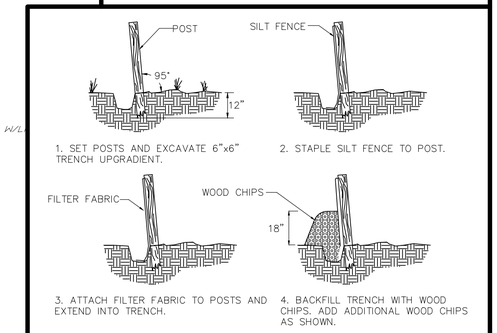

SILT FENCE

N.T.S.

Copyright © 2014 Design Professionals, Inc. — All Rights Reserved

design professionals
425 SULLIVAN AVENUE
P.O. BOX 904
SOUTH WINDSOR, CT 06074
860-291-8755 - T
860-528-3557 - F
www.designprofessionalsinc.com
CIVIL & TRAFFIC ENGINEERS / PLANNERS / SURVEYORS
GIS ANALYSTS / LANDSCAPE ARCHITECTS

This plan is based upon a survey by and of record information of the Professional Engineer, Land Surveyor or Architect listed herein.

Locating utility locations depicted hereon are based on available information and should be field verified prior to construction.

Contractor shall verify all dimensions, grades and conditions prior to construction and report any discrepancies to the engineer.

This plan and other items prepared by Design Professionals, Inc. (DPI) are instruments of service and remain its property. The reproduction, alteration or use for any purpose other than those for which it was prepared is prohibited without the written consent of Design Professionals, Inc. (DPI).

PREPARED FOR:
JOHN V. &
JANET CARLSON
39 ATTAWAN AVENUE
NIANTIC, CT 06357

PROJECT NO.: 31400.1939
DATE: 2/20/15
SCALE: 1"=10'
DRAWN BY: AK
CHECKED BY: AK

JOHN V. AND JANET CARLSON

39 ATTAWAN AVENUE
NIANTIC, CONNECTICUT

NO.	DATE	REVISIONS	BY
			MHA

PLOT PLAN

SCALE 1" = 10': 0, 5', 10', 20'

SHEET 1

File: C:\Jobs\31400\1939-Carlson\AutoCAD\Site Planning Layout: 1 Plotted: 2/20/2015 3:31 PM Last Saved: 2/18/2015 9:07 AM Last Saved By: akner

Copyright © 2014 Capital Studio Architects, LLC

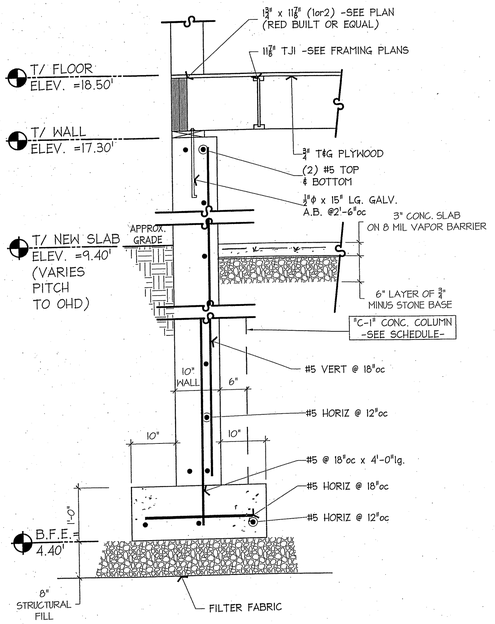

1 S-1.0 SECTION @ EXT. WALL

SCALE: 3/4"=1'-0"

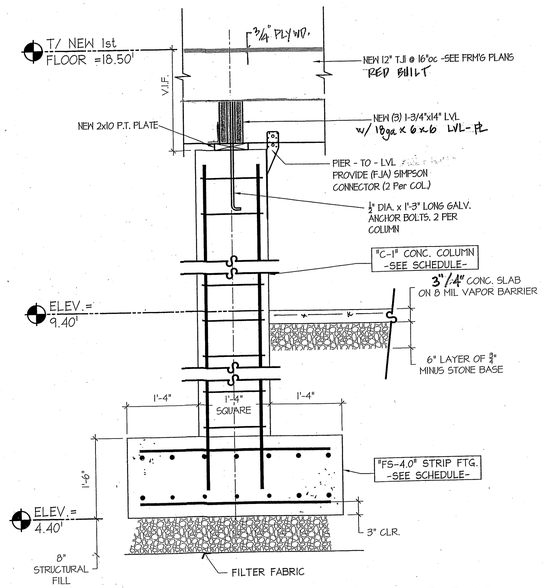

2 S-1.0 "C-1" -SECTION @ CENTER PIERS

SCALE: 3/4"=1'-0"

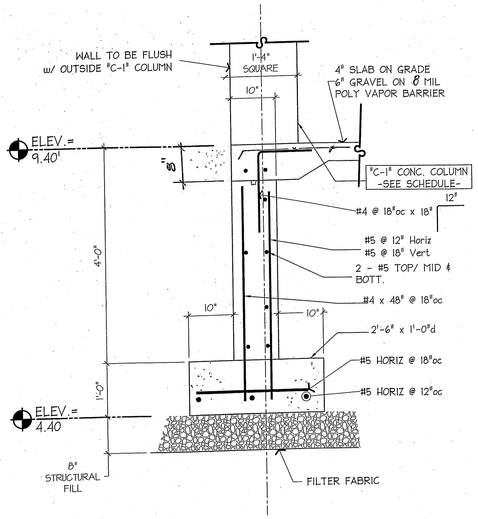

3 S-1.0 WALL @ OHD DOOR

SCALE: 3/4"=1'-0"

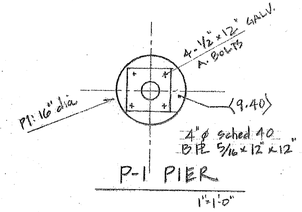

P-1 PIER

1"=1'-0"

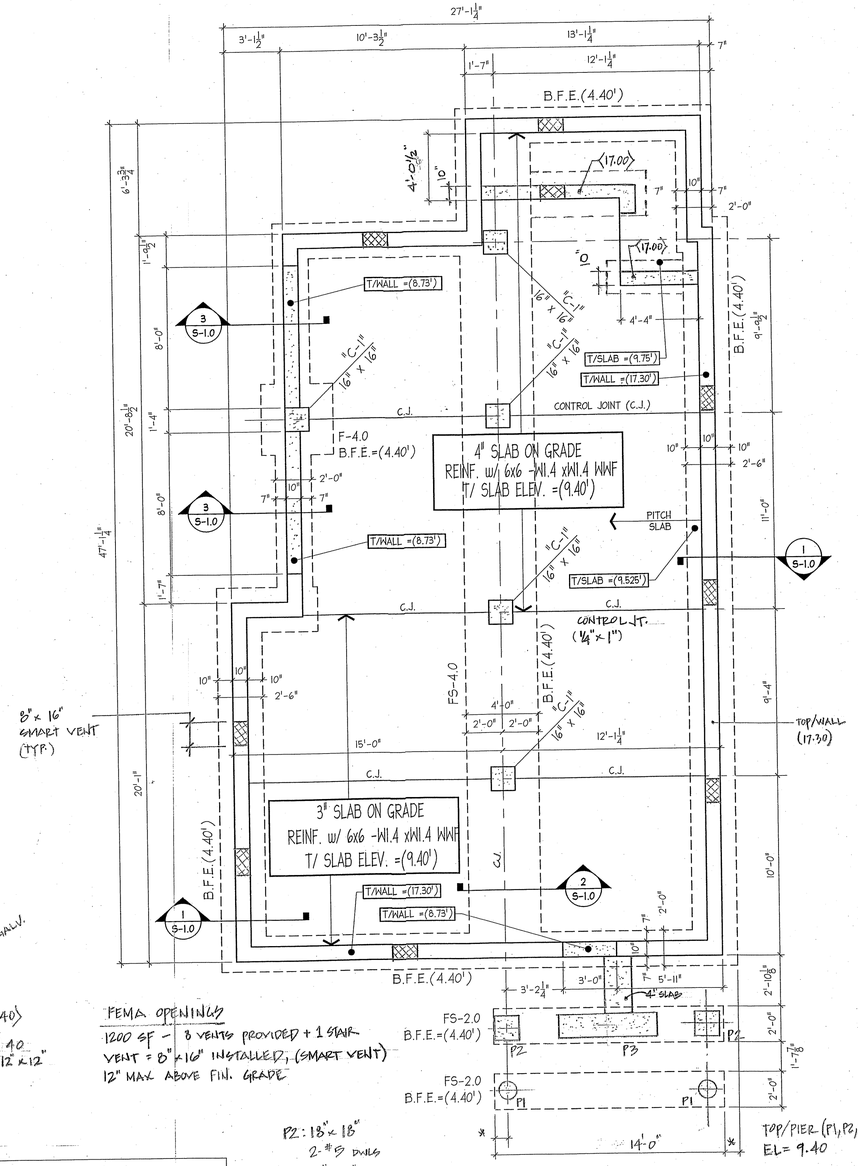

FEMA OPENINGS

1200 SF - 8 VENTS PROVIDED + 1 STAIR VENT = 8" x 16" INSTALLED, (SMART VENT) 12" MAX ABOVE FIN. GRADE

P2: 18" x 18"
2-#5 DWLS

P3: 18" x 66"
4-#5 DWLS

1 S-1.0 FOUNDATION PLAN

SCALE: 1/4"=1'-0"

3. PROVIDE A CB AA BASE @ 4x4 POSTS (P2, P3)

NOTES:
1. P1: 16" dia PIER W/ 2-#5 DWLS
2. ALL FOOTINGS SHALL BEAR ON 8" COMPACTED CONTROLLED STRUCT'L FILL.

CONTROLLED STRUCTURAL FILL	
% PASSING	SIEVE SIZE:
100	3½"
50 - 100	¾"
25 - 100	NO. 4

PIER SCHEDULE		
NO:	SIZE:	REINF.
C-1	16" x 16"	(4) #6 DOWELS (EXTEND TO "FS") w/ #3 HOOPS @ 16"oc

FOOTING SCHEDULE		
TYPE:	SIZE:	REINF.
F-4.0	4'-0" x 4'-0" x 1'-0"	(3) #5 E.W. BOTT.
FS-2.0 (STRIP)	2'-0" wide x 1'-0" deep	(4) #5 L.W. #5 @ 12" S.W. (1 LAYERS)
FS-4.0 (STRIP)	4'-0" wide x 1'-6" deep	(8) #5 L.W. #5 @ 12" S.W. (2 LAYERS)

CAPITAL STUDIO
architects LLC
1379 MAIN STREET EAST HARTFORD CT. 06108
860.289.3262 fax 860.289.3163

THE STATE OF CONNECTICUT DEPARTMENT OF HOUSING (DOH) COMMUNITY DEVELOPMENT BLOCK GRANT - DISASTER RECOVERY (CDBG-DR) OWNER OCCUPIED REHABILITATION and REBUILDING PROGRAM (OORR)

CARLSON RESIDENCE REHABILITATION and MITIGATION APPLICATION No. 1939

WML WILLIAM M. LAPOINTE PE
309 Main Street
East Hartford, CT 06108
Voice: 860.528.9495
Fax: 860.528.9496
wml@wml.com

date	description	no.

revisions

FOUNDATION PLAN AND SECTIONS

S-1.0

date	19 JUN 2015
drawn	JB
scale	AS SHOWN
checked	WML
project no.	2015-01
application no.	1939

Copyright © 2014 Capital Studio Architects, LLC

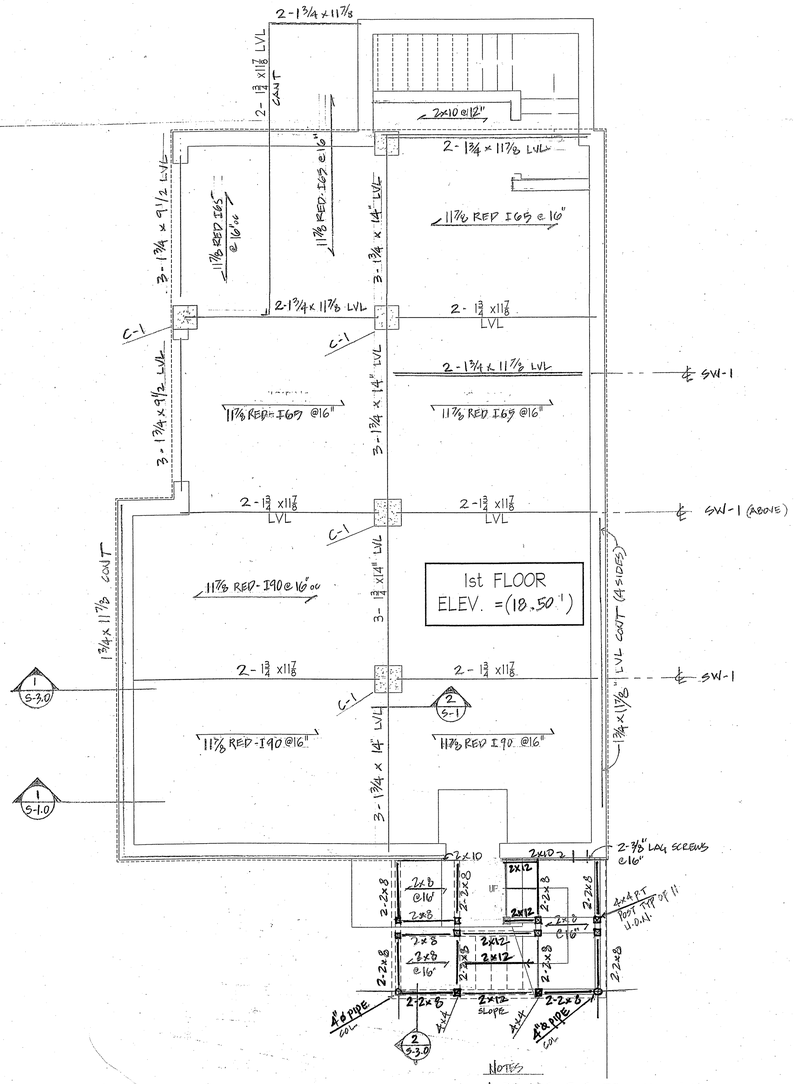

NOTES

1. PROVIDE 2x6 DECKING ALL LEVEL.
2. 2x12 TREADS - OPEN RISER
3. S.S. SIMPSON CONNECTORS/HANGERS AT ALL CONNECTIONS

1 / S-2.0 **1st FLOOR FRAMING** W/ BASEMENT PLAN

SCALE: 1/4"=1'-0"

NOTES:

1. ALL FLOORS: ¾" T&G PLYWOOD - GLUE & NAILED/SCREW
2. SW-1: 2x6 SHEAR WALLS - SEE DETAILS ON S-3.0.
3. ALL HEADERS 3-2x10's U.O.N. WITH 3-2x6 POSTS EA END.
4. I JOISTS: RED BUILT OR EQUAL. SUBMIT FOR REVIEW.
5. LVL: RED LAM OR EQUAL. SUBMIT FOR REVIEW.
6. PROVIDE SIMPSON HANGERS (HWU OR WPU) AT FLUSH BEAM LOCATIONS.
7. C-1: 16"x16" CONC PIERS - SEE FND PLAN
8. EXT. DECK/STAIR: USE 4" dia, sched 40 PIPE COL - PAINTED (RUST-PROOF)
   CAP PL ⅜x6x8
   BASE PL 5/16-12x12

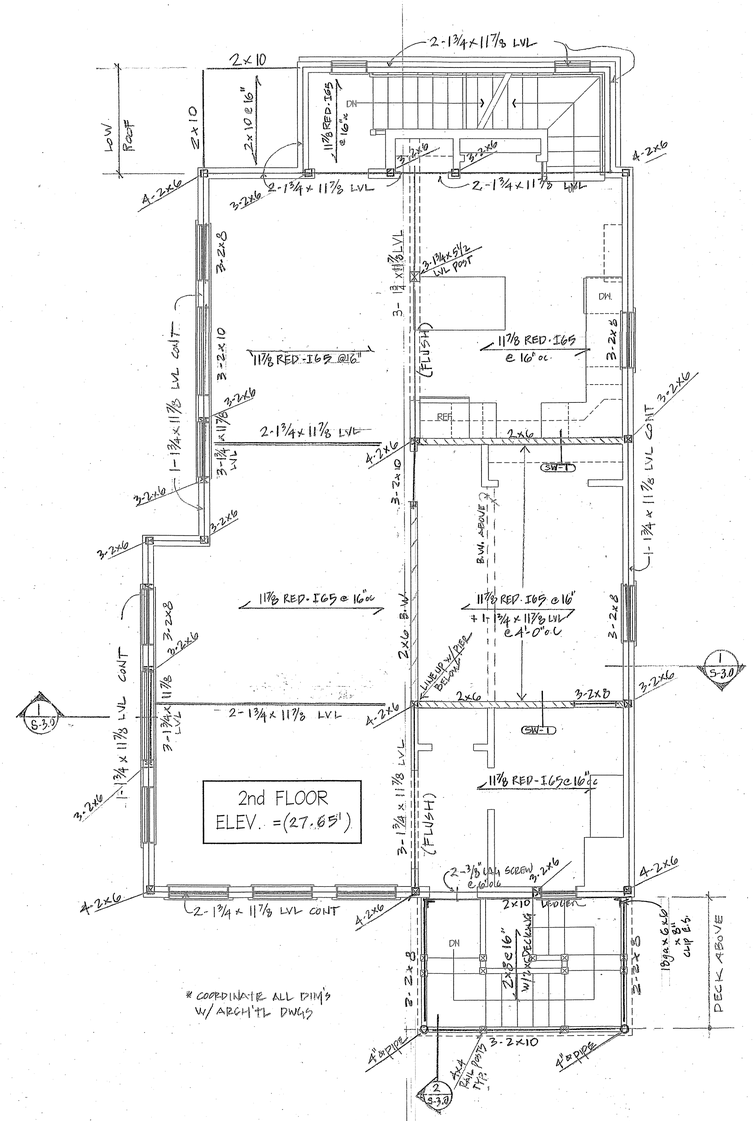

2 / S-2.0 **2nd FLOOR FRAMING** W/ 1ST FLOOR PLAN

SCALE: 1/4"=1'-0"

NOTES:

1. ALL FLOORS: ¾" T&G PLYWOOD - GLUE & NAILED/SCREW
2. SW-1: 2x6 SHEAR WALLS - SEE DETAILS ON S-3.0.
3. ALL HEADERS 3-2x10's U.O.N. WITH 3-2x6 POSTS EA END.
4. I JOISTS: RED BUILT OR EQUAL. SUBMIT FOR REVIEW.
5. LVL: RED LAM OR EQUAL. SUBMIT FOR REVIEW.
6. PROVIDE SIMPSON HANGERS (HWU OR WPU) AT FLUSH BEAM LOCATIONS.

CAPITAL STUDIO architects LLC
1379 MAIN STREET EAST HARTFORD CT. 06108
860.289.3262 fax 860.289.3163

THE STATE OF CONNECTICUT DEPARTMENT OF HOUSING (DOH) COMMUNITY DEVELOPMENT BLOCK GRANT - DISASTER RECOVERY (CDBG-DR) OWNER OCCUPIED REHABILITATION and REBUILDING PROGRAM (OORR)

CARLSON RESIDENCE REHABILITATION and MITIGATION APPLICATION No. 1939

WML WILLIAM M. LAPOINT, PE
1379 Main Street
East Hartford, CT 06108
voice: 860.622.0840
wm@pe@aol.com

date	description	no.
revisions		

FRAMING PLANS - FLOOR

S-2.0

date	19 JUN 2015
drawn	JB
scale	AS SHOWN
checked	WML
project no.	2015-01
application no.	1939

Copyright © 2014 Capital Studio Architects, LLC

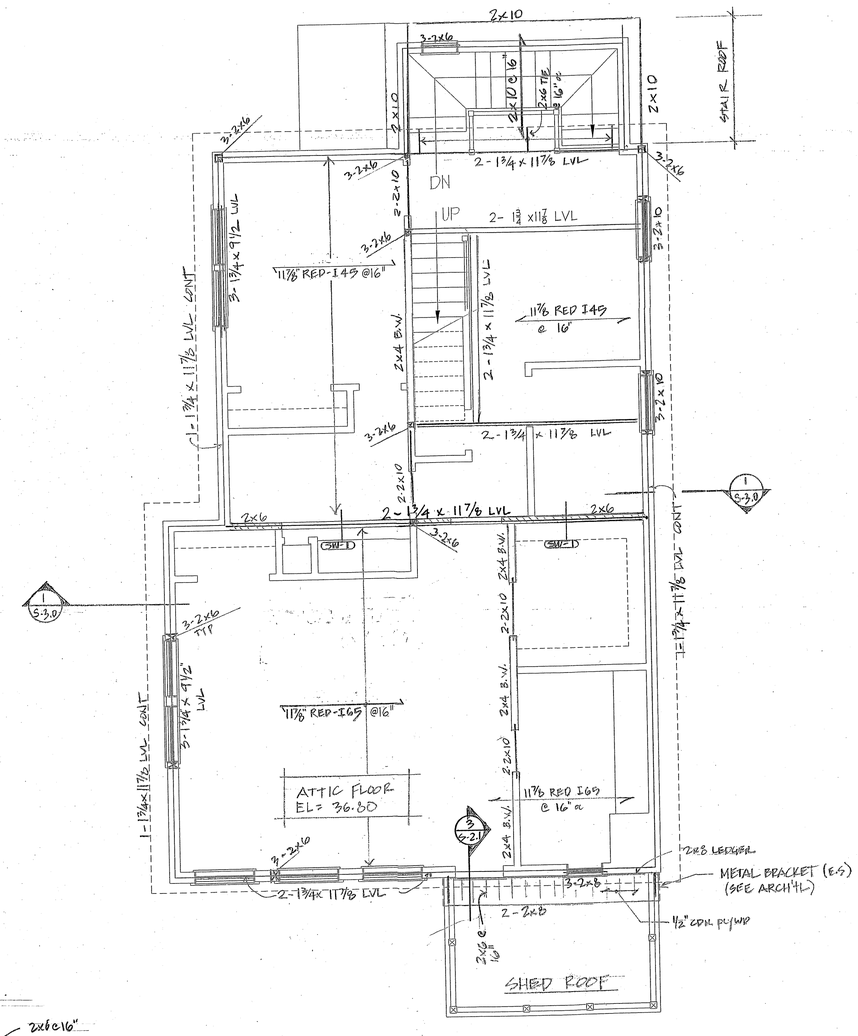

1 S-2.1 ATTIC/ 3rd FLOOR FRAMING W/2ND FLOOR PLAN

SCALE: 1/4"=1'-0"

NOTES:

1. SW-1: 2x6 SHEAR WALLS - SEE DETAILS ON S-3.0
2. ALL HEADERS 3-2x10's U.O.N. W/3-2x6 POSTS EA END.

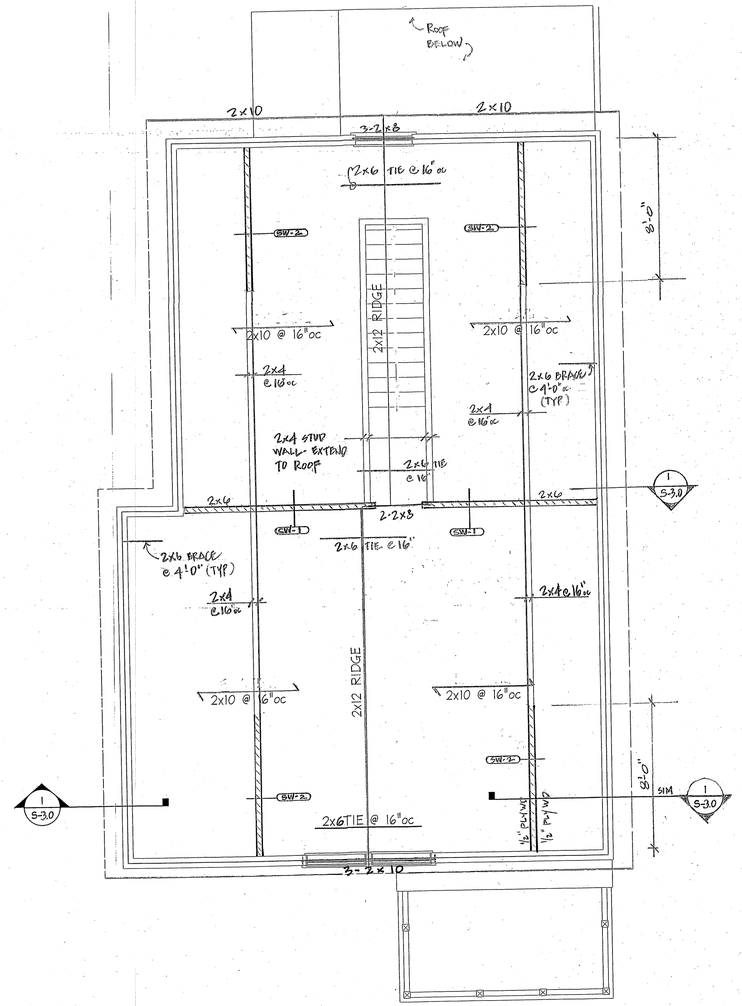

2 S-2.1 ROOF FRAMING W/ATTIC PLAN

SCALE: 1/4"=1'-0"

NOTES:

1. SW-1: 2x6 SHEAR WALL. PROVIDE ½" PLYWOOD (ONE SIDE)
   SW-2: 2x4 SHEAR WALL. PROVIDE ½" PLYWOOD (2 SIDES x 8'-0" LONG)
2. SHEAR WALL DETAIL - SEE S-3.0

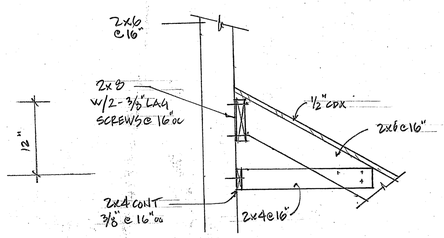

3 S-2.1 ROOF DETAIL

1"=1'-0"

CAPITAL STUDIO architects LLC
1379 MAIN STREET EAST HARTFORD CT. 06108
860.289.3262 fax 860.289.3163

THE STATE OF CONNECTICUT DEPARTMENT OF HOUSING (DOH) COMMUNITY DEVELOPMENT BLOCK GRANT - DISASTER RECOVERY (CDBG-DR) OWNER OCCUPIED REHABILITATION and REBUILDING PROGRAM (OORR)

CARLSON RESIDENCE REHABILITATION and MITIGATION APPLICATION No. 1939

WML WILLIAM M. LAPOINT, PE
1379 Main Street
East Hartford, CT 06108
voice: 860.622.0840
wmlpe@aol.com

date	description	no.
revisions		

FRAMING PLAN- ROOF

S-2.1

date	19 JUN 2015
drawn	JB
scale	AS SHOWN
checked	WML
project no.	2015-01
application no.	1939

Copyright © 2014 Capital Studio Architects, LLC

STRUCTURAL NOTES:

A. GENERAL

1. ALL WORK SHALL CONFORM TO THE CT BUILDING CODES: IRC 2009 & 2007 & 2009, 2013 CONNECTICUT SUPPLEMENT , ALL FEMA Requirements and the Town of EASTLYME.
2. THE CONTRACTOR SHALL BE RESPONSIBLE FOR ALL TEMPORARY SHORING AND BRACING REQUIRED TO MAINTAIN STRUCTURAL STABILITY DURING CONSTRUCTION.
3. IF REQ'D, ALL FIELD TESTING SHALL PERFORMED BY AN ACCREDITED TESTING LABORATORY.

B. FOUNDATION

4. ALL FOUNDATIONS SHALL BEAR ON APPROVED STRUCTURAL FILL. ANY UNSUITABLE SOIL CONDITION SHALL BE BROUGHT TO THE ATTENTION OF THE OWNER/ARCHITECT/ENGINEER.
5. SLAB-ON-GRADE SUB-GRADE SHALL BE COMPACTED USING A VIBRATORY TAMPER OR JUMPING SOIL RAMMER AFTER THE STRUCTURAL BACKFILL HAS BEEN APPROVED.
6. PROVIDE BACKFILL MATERIAL (Submit for Approval) FOR FOUNDATION WALLS AND BELOW FOOTINGS & SHALL BE PLACED IN LAYERS NOT TO EXCEED 8". REF: BACKFILL SPECIFICATIONS.
7. WHERE BOTT/FOOTINGS ARE BELOW THE GROUNDWATER ELEVATION, PLACE 8" OF 3/8" CRUSHED STONE UNDER FOOTINGS.

C. CONCRETE (All materials to be submitted for Review before start of work)

8. CONCRETE MATERIALS ARE AS FOLLOWS: 3000 psi at WALLS, FOOTINGS, and EXTERIOR SLABS, 3500 psi at SLAB-ON GRADE & COLUMNS/PIERS.
9. REINFORCEMENT: ASTM A615, Fy = 60 ksi.
10. CONCRETE WORK SHALL CONFORM TO ACI 301-03 & ACI 318-03.
11. MINIMUM COVER FOR REBAR:
    1 CONCRETE AGAINST EARTH.....3"
    2 CONCRETE EXPOSED TO WEATHER.....2"
    3 CONCRETE AT INTERIOR SLABS.....1"
12. INTERIOR FLOOR
    BASEMENT SLAB SHALL HAVE A STEEL TROWEL FINISH. PITCH TO EXTERIOR. EXTERIOR SLABS SHALL RECEIVE A COURSE BROOM FINISH. VERIFY WITH OWNER ON SLAB TREATMENT BEFORE PRECEEDING.
13. APPLY CURING COMPOUND TO SLABS IMMEDIATELY FOLLOWING TROWELING, Cure-N-Seal #830 or EQUAL.
14. GROUT & RUB ALL EXPOSED SURFACES OF FOUNDATION WALLS WITHIN 48 HOURS OF POUR.
15. SAW CUT SLAB-ON-GRADE CONTROL JOINTS AT A MAX. (8' x 8') MAX. JOINTS SHALL BE CUT 1/4" min. and WITHIN 24 HOURS OF POUR. FILL JOINTS WITH NON SHRINK GROUT.

D. STEEL (All materials to be submitted for Review before start of work)

16. MATERIALS: (All exposed steel shall be galvanized)
    W or HP Sections.....ASTM A992, Fy = 50 ksi.
    PLATES, ANGLES, ETC.....ASTM A36, Fy = 36 ksi.
    ANCHOR BOLTS (galv).....ASTM A307.
    PIPE COLS.....ASTM A501, Fy = 36 ksi.
17. WHERE WOOD BLOCKING IS ATTACHED TO STEEL, PROVIDE 9/16" DIA HOLES AT 24" oc.

E. WOOD (All materials to be submitted for Review before start of work)

18. MATERIALS: USE HEM OR DOUG FIR-LARCH, NO. 1 OR BETTER FOR ALL CONVENTIONAL FRAMING. USE LUMBER WITH LESS THAN 19 PERCENT MOISTURE CONTENT.
    Design Data – Fb = 1000 psi, E = 1500 ksi
19. MATERIALS: USE LVL OR EQUAL (micro-lam) BEAMS AS INDICATED ON DRAWINGS. FOLLOW MANUF. REQUIREMENTS FOR INSTALLATION AT EXTERIOR DECK. MIN BEARING = 3 ½"
    Design Data – Fb = 2800 psi, E = 2000 ksi
20. USE TJI (Basis point of Approved Equal) FLOOR TRUSSES AS INDICATED ON DRAWINGS. USE WEB STIFFENERS AND SOLID BLOCKING AT ALL BEARING POINTS AND AS REQUIRED PER MANUFACTURE. TJI's ARE UNSTABLE UNTIL BRACED LATERALLY, PROVIDE TEMPORARY BRACING AND SHORING BEFORE ALL FLOORING IS IN PLACE. MIN. BEARING FOR TJI's = 3 ½".
21. USE SIMPSON (or Approved Equal) STRONG TIE JOIST HANGERS AND FRAMING CONNECTORS. SUBMIT TO ENGINEER FOR REVIEW.
22. TIE RAFTERS TO WALL PLATES WITH SIMPSON HURRICANE CONNECTORS. SEE DETAILS.
23. DOUBLE UP FLOOR JOISTS NEXT TO ALL FLOOR PENETRATIONS GREATER THAN 24".
24. DO NOT CUT HOLES IN FLOOR JOISTS WITHOUT APPROVAL FROM ENGINEER OR MANUF.
25. ANY LUMBER TOUCHING CONCRETE OR EXPOSED TO WEATHER SHALL BE PRESSURE TREATED.
26. IT IS CRITICAL THAT ALL ROOF RAFTERS, RIDGE BEAMS, HEADERS AND BEARING WALLS CARRY THEIR LOADS DOWN TO THE FOUNDATION. WHENEVER A BEAM OR HEADER BEARS ON A FRAMED WALL, INSTALL A 3-2X4 COL(OR AS NOTED) IN T HE FRAMED WALL VERTICALLY UNDER THE BEARING POINT LOAD. USE SOLIB BLOCKING BETWEEN FLOORS.
28. CONTRACTOR SHALL CONFORM TO THE **"WOOD FRAME CONSTRUCTION MANUAL", 110 mph, EXPOSURE C** (WFCM), FOR ALL NAILING PATTERNS, FASTENING & CONNECTIONS. SEE DWGS FOR ADDITIONAL SHEAR WALL CONNECTIONS.

F. DESIGN CRITERIA (NIANTIC/EASTLYME, CT)

FIRST FLOOR LIVE LOAD = 40 psf
SECOND FLOOR (Bedrooms) LIVE LOAD = 30 psf
ATTIC FLOOR LIVE LOAD = 30 psf
EXTERIOR DECK LIVE LOAD = 60 psf
ROOF LIVE LOAD = 30 psf
WIND LOAD (App K).....110 mph (3 sec)
PRESUMPTIVE SOIL BEARING PRESSURE.....1.0 TONS/SF

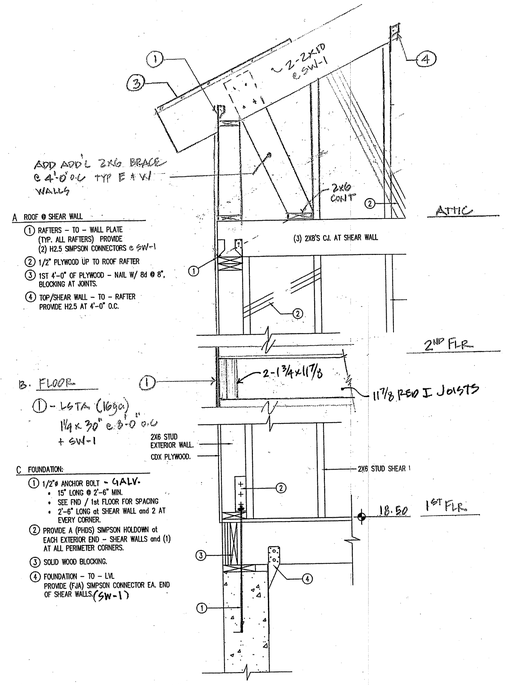

1 / S-3.0 EXTERIOR WALL
WITH SHEAR WALL DETAILS

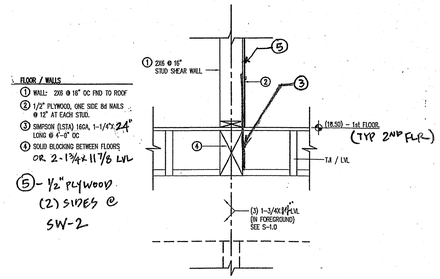

1A / C-3.0 INTERIOR SHEAR WALLS (SW-1)

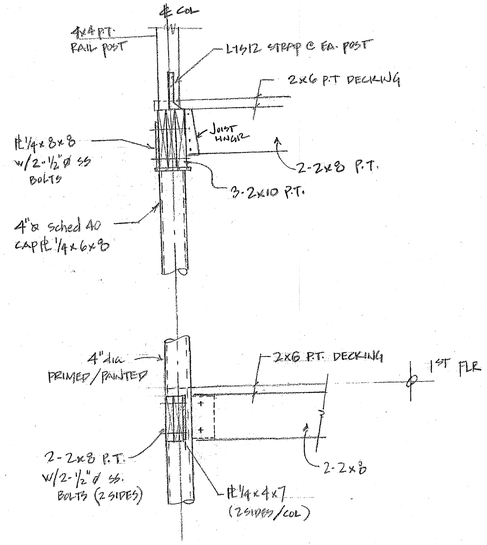

2 / S-3.0 SECTION - FRONT STAIR - TYP ALL COLS.
1" = 1'-0"

- ALL STL PRIMED/RUST PROOF PAINT

CAPITAL STUDIO architects LLC
1379 MAIN STREET 860.289.3262
EAST HARTFORD CT. 06108 fax 860.289.3163

THE STATE OF CONNECTICUT DEPARTMENT OF HOUSING (DOH) COMMUNITY DEVELOPMENT BLOCK GRANT - DISASTER RECOVERY (CDBG-DR) OWNER OCCUPIED REHABILITATION and REBUILDING PROGRAM (OORR)

CARLSON RESIDENCE REHABILITATION and MITIGATION APPLICATION No. 1939

WML WILLIAM M. LANGNER P.E.
379 Main Street
East Hartford, CT 06108
Voice: 860.622.0640
wmlang@sbcl.com

date	description	no.
revisions		

S-3.0

date	19 JUN 2015
drawn	JB
scale	AS SHOWN
checked	WML
project no.	2015-01
application no.	1939

Copyright ©2015 Capital Studio Architects, LLC

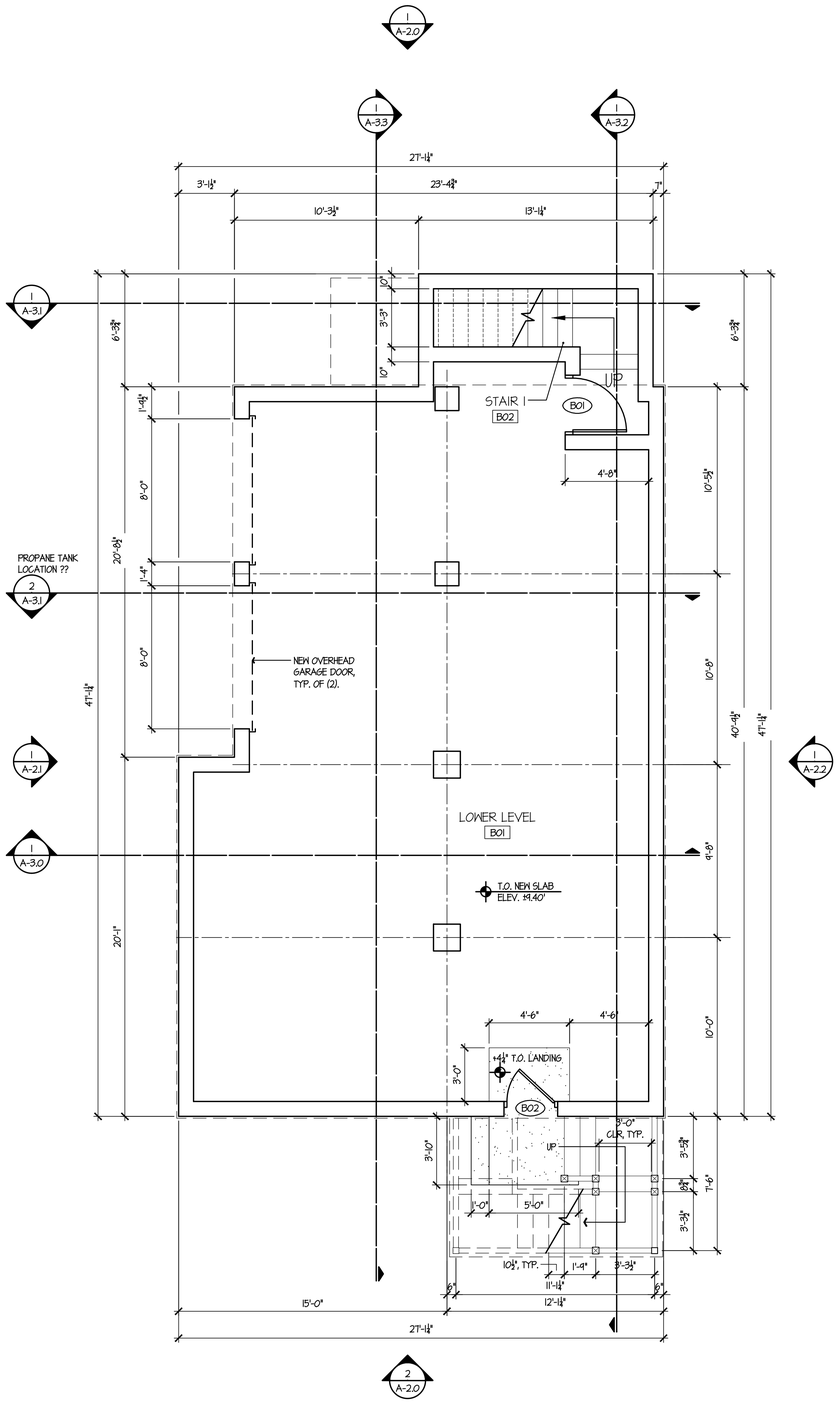

2 A-2.0 GROUND LEVEL PLAN

SCALE: 1/4"= 1'-0"

NORTH

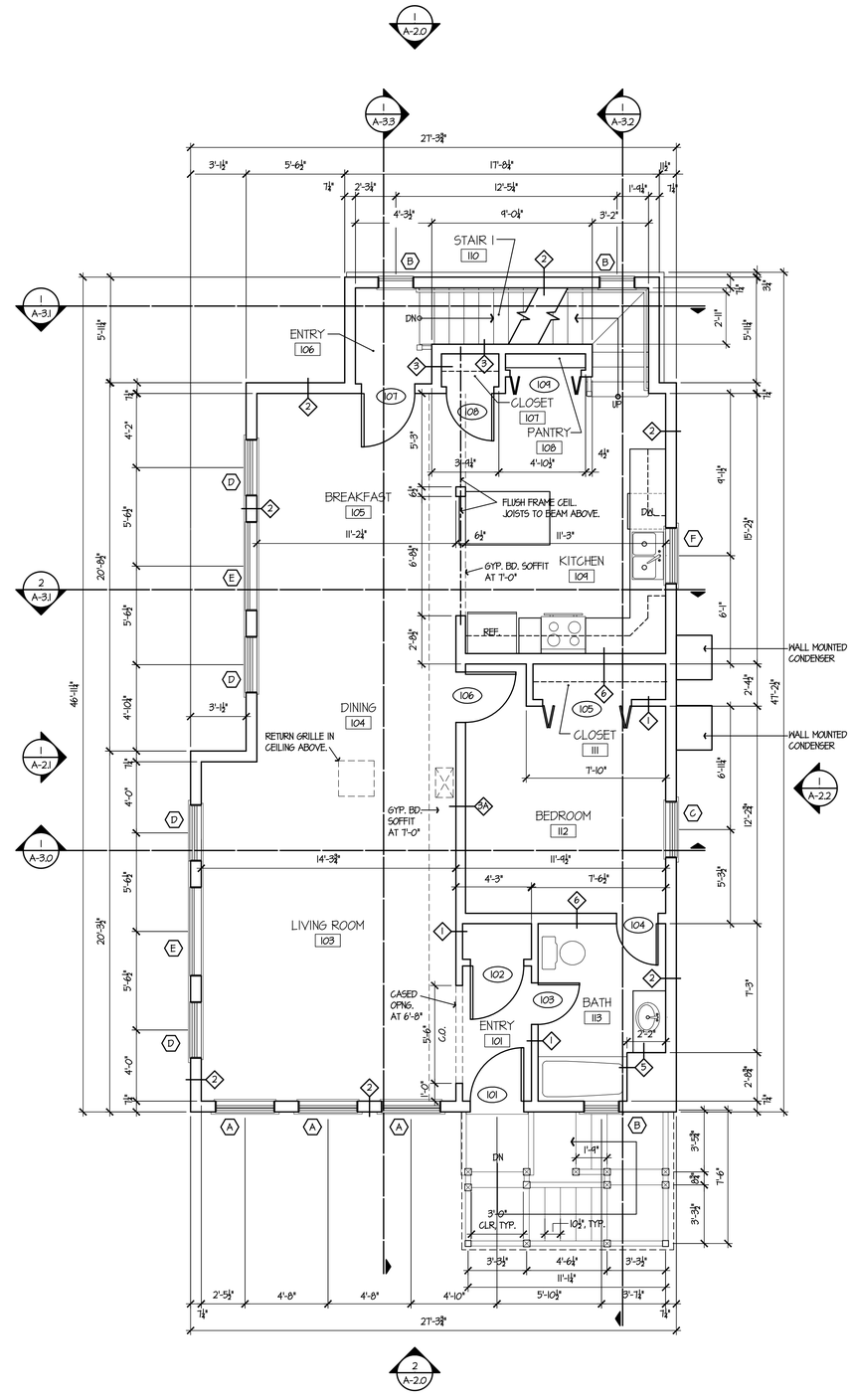

1 A-2.0 FIRST FLOOR

SCALE: 1/4"= 1'-0"

NORTH

CAPITAL STUDIO
architects LLC
1379 MAIN STREET EAST HARTFORD CT. 06108
860.289.3262 fax 860.289.3163

THE STATE OF CONNECTICUT DEPARTMENT OF HOUSING (DOH) COMMUNITY DEVELOPMENT BLOCK GRANT - DISASTER RECOVERY (CDBG-DR) OWNER OCCUPIED REHABILITATION and REBUILDING PROGRAM (OORR)

CARLSON RESIDENCE
APPLICATION No. 1939
39 Attawan Avenue
Niantic, CT 06357

date	description	no.

revisions

FLOOR PLANS

A-1.0

date	19 JUNE 2015
drawn	NWF
scale	AS SHOWN
checked	PM/JP/KG
project no.	1341-12
application no.	1939

Copyright © 2015 Capital Studio Architects, LLC

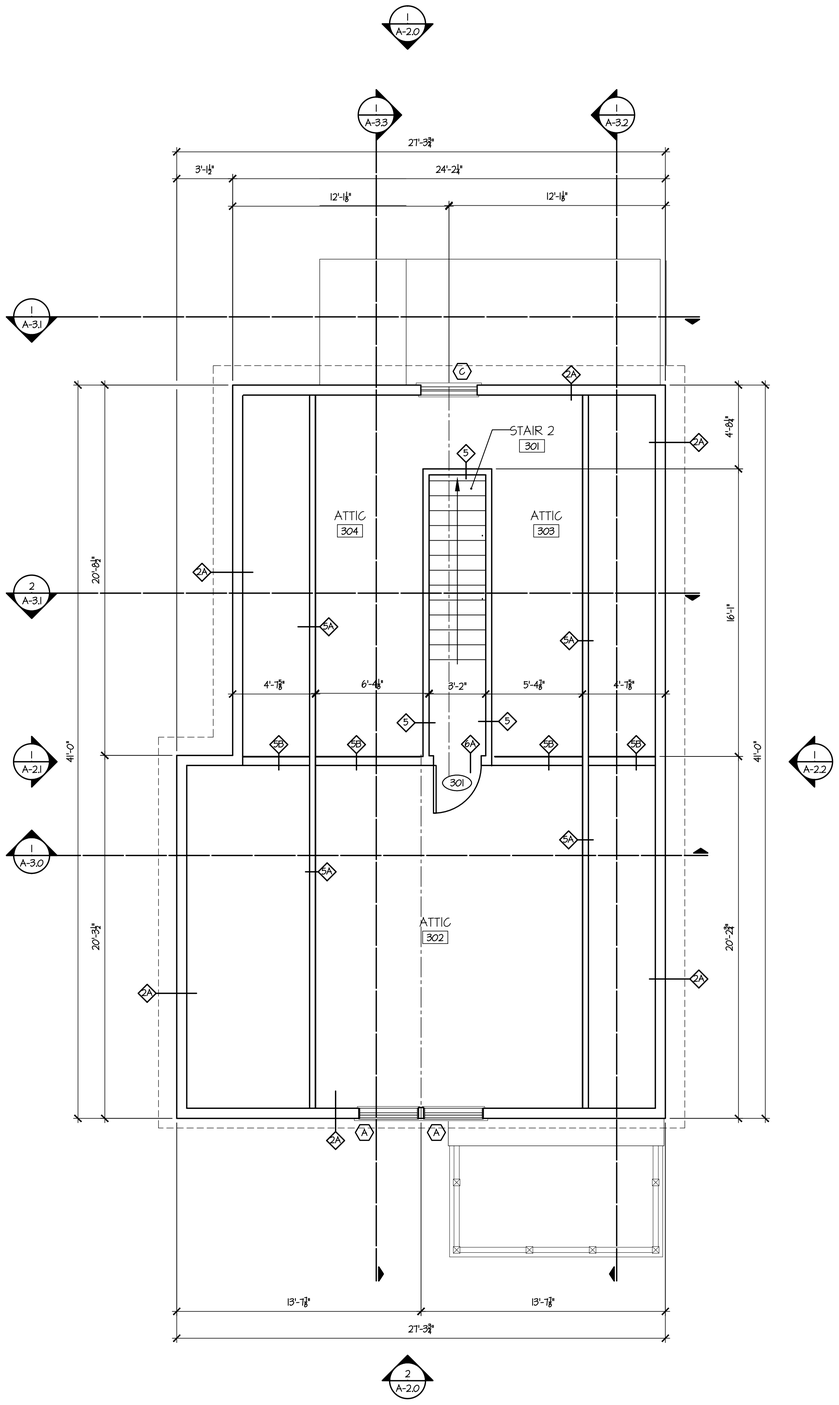

2 A-1.0 ATTIC PLAN

SCALE: 1/4" = 1'-0"

NORTH

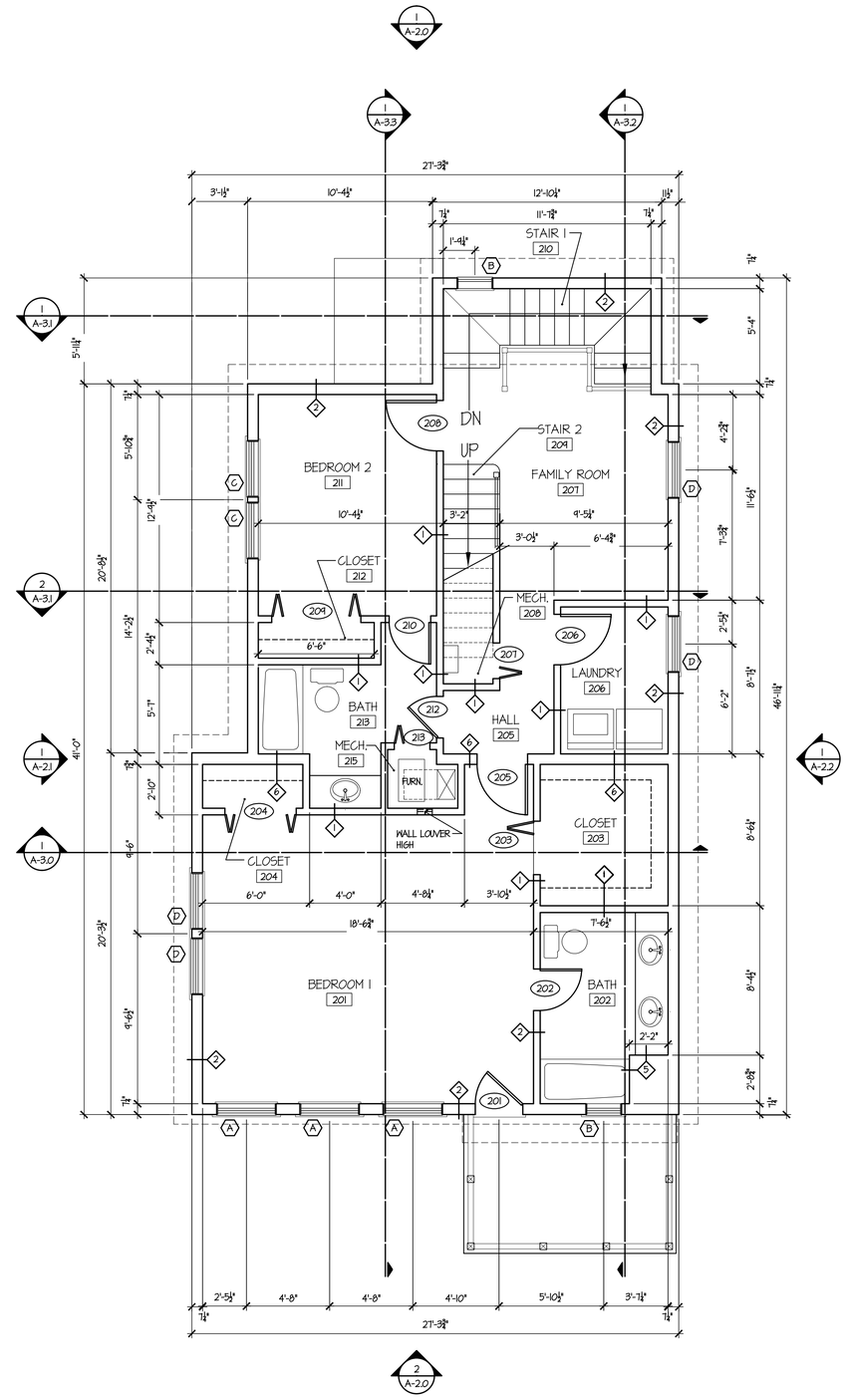

2 A-1.0 SECOND FLOOR

SCALE: 1/4" = 1'-0"

NORTH

CAPITAL STUDIO
architects LLC
1379 MAIN STREET EAST HARTFORD CT. 06108
860.289.3262 fax 860.289.3163

THE STATE OF CONNECTICUT DEPARTMENT OF HOUSING (DOH) COMMUNITY DEVELOPMENT BLOCK GRANT - DISASTER RECOVERY (CDBG-DR) OWNER OCCUPIED REHABILITATION and REBUILDING PROGRAM (OORR)

CARLSON RESIDENCE
APPLICATION No. 1939
39 Attawan Avenue
Niantic, CT 06357

date	description	no.

revisions

FLOOR PLANS

A-1.1

date	19 JUNE 2015
drawn	NWF
scale	AS SHOWN
checked	PM/JP/KG
project no.	1347-12
application no.	1939

Copyright © 2015 Capital Studio Architects, LLC

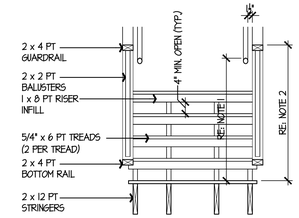

NOTE 1 - HANDRAIL MIN. HEIGHT 34" - MAX HEIGHT 38"
NOTE 2 - GUARDRAIL MIN. HEIGHT 36"

HANDRAIL TO BE LOCATED MIN. 1-1/2" BELOW GUARDRAIL

3 / A-2.0 TYPICAL DECK STAIR CROSS SECTION

SCALE: 1/2" = 1'-0"

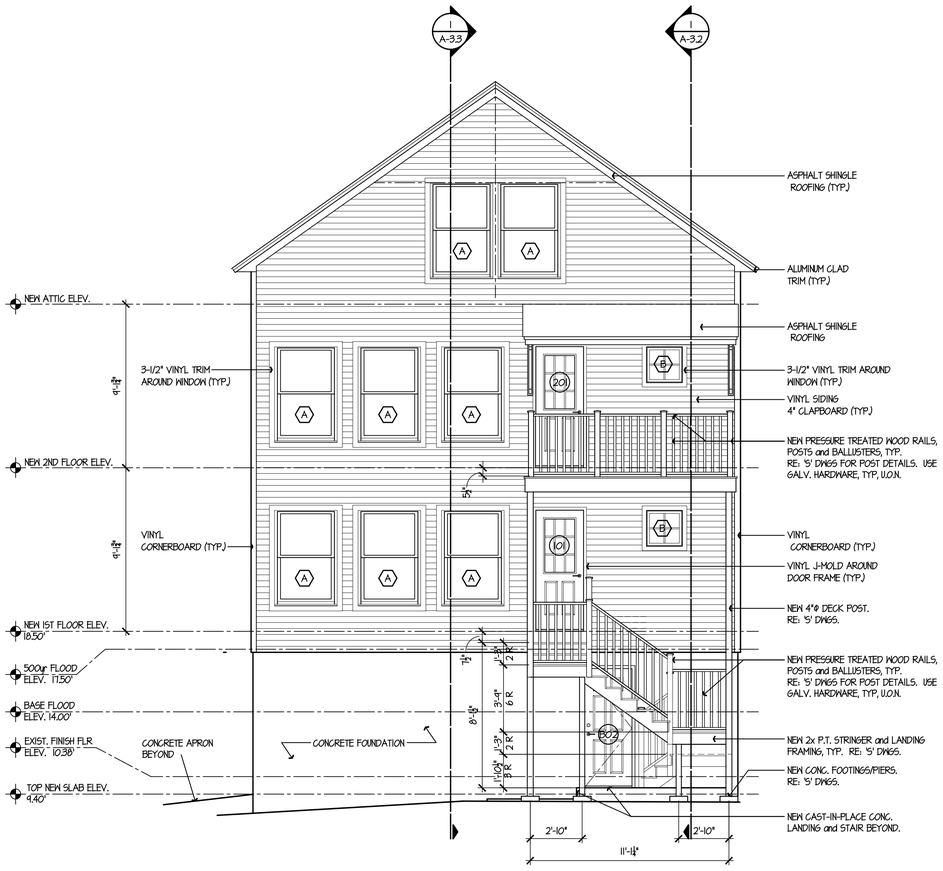

2 / A-2.0 EAST

SCALE: 1/4" = 1'-0"

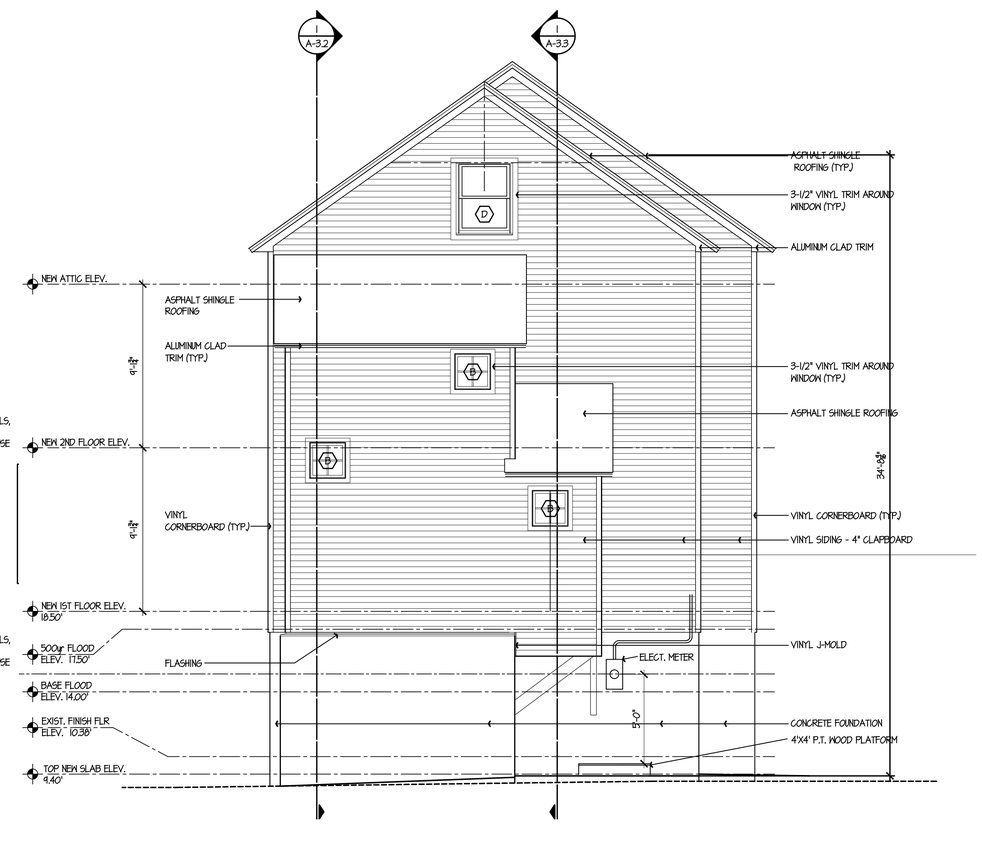

1 / A-2.0 WEST

SCALE: 1/4" = 1'-0"

CAPITAL STUDIO
architects LLC
1379 MAIN STREET EAST HARTFORD CT. 06108
860.289.3262 fax 860.289.3163

THE STATE OF CONNECTICUT DEPARTMENT OF HOUSING (DOH) COMMUNITY DEVELOPMENT BLOCK GRANT - DISASTER RECOVERY (CDBG-DR) OWNER OCCUPIED REHABILITATION and REBUILDING PROGRAM (OORR)

CARLSON RESIDENCE
APPLICATION No. 1939
39 Attawan Avenue
Niantic, CT 06357

date	description	no.

revisions

ELEVATIONS

A-2.0

date	19 JUNE 2015
drawn	NWF
scale	AS SHOWN
checked	PM/JP/KG
project no.	1347-12
application no.	1939

Copyright © 2015 Capital Studio Architects, LLC

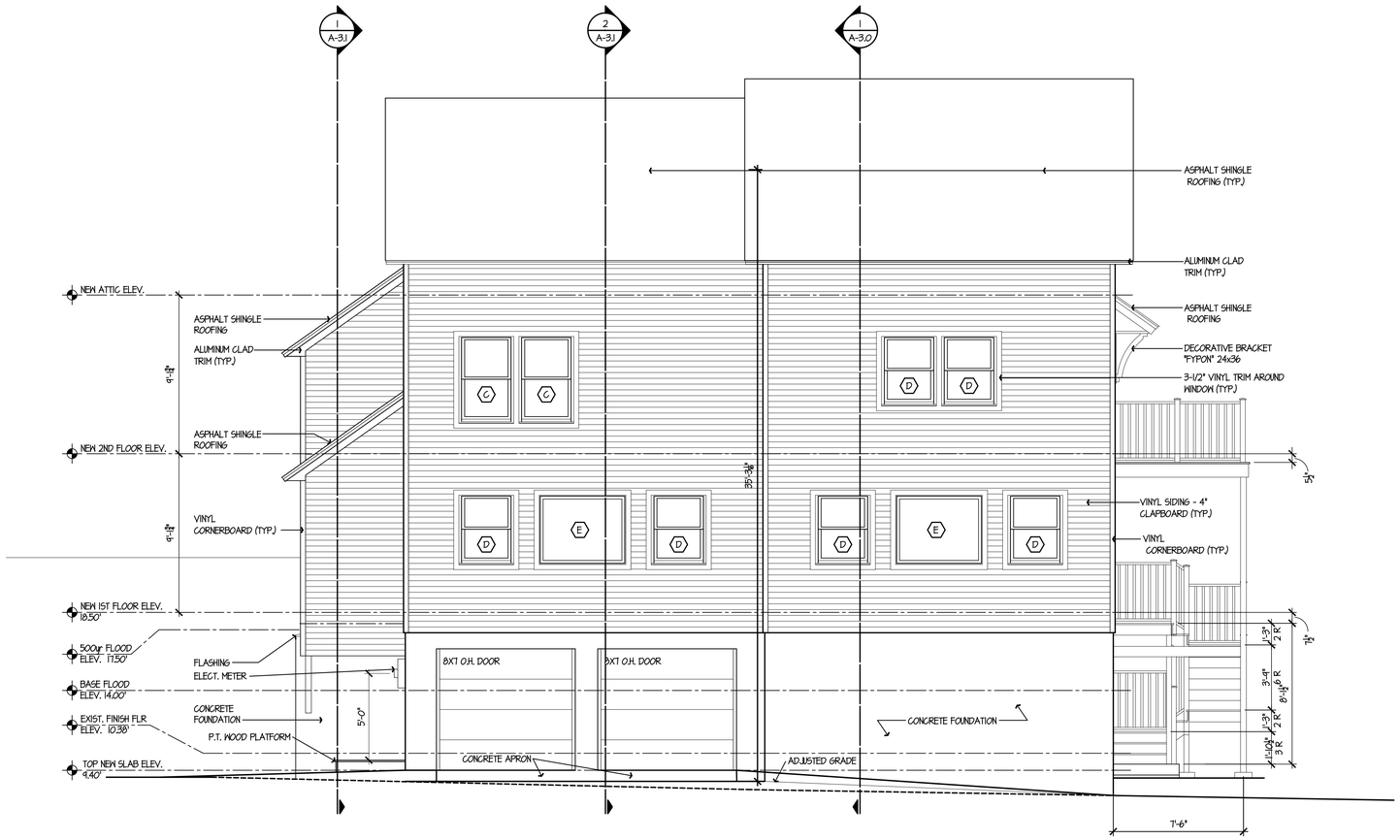

1 / A-2.1 SOUTH

SCALE: 1/4"= 1'-0"

CAPITAL STUDIO
architects LLC
1379 MAIN STREET EAST HARTFORD CT. 06108
860.289.3262 fax 860.289.3163

THE STATE OF CONNECTICUT DEPARTMENT OF HOUSING (DOH) COMMUNITY DEVELOPMENT BLOCK GRANT - DISASTER RECOVERY (CDBG-DR) OWNER OCCUPIED REHABILITATION and REBUILDING PROGRAM (OORR)

CARLSON RESIDENCE
APPLICATION No. 1939
39 Attawan Avenue
Niantic, CT 06357

date	description	no.

revisions

SOUTH ELEVATION

A-2.1

date	19 JUNE 2015
drawn	NWF
scale	AS SHOWN
checked	PM/JP/KG
project no.	1347-12
application no.	1939

Copyright © 2015 Capital Studio Architects, LLC

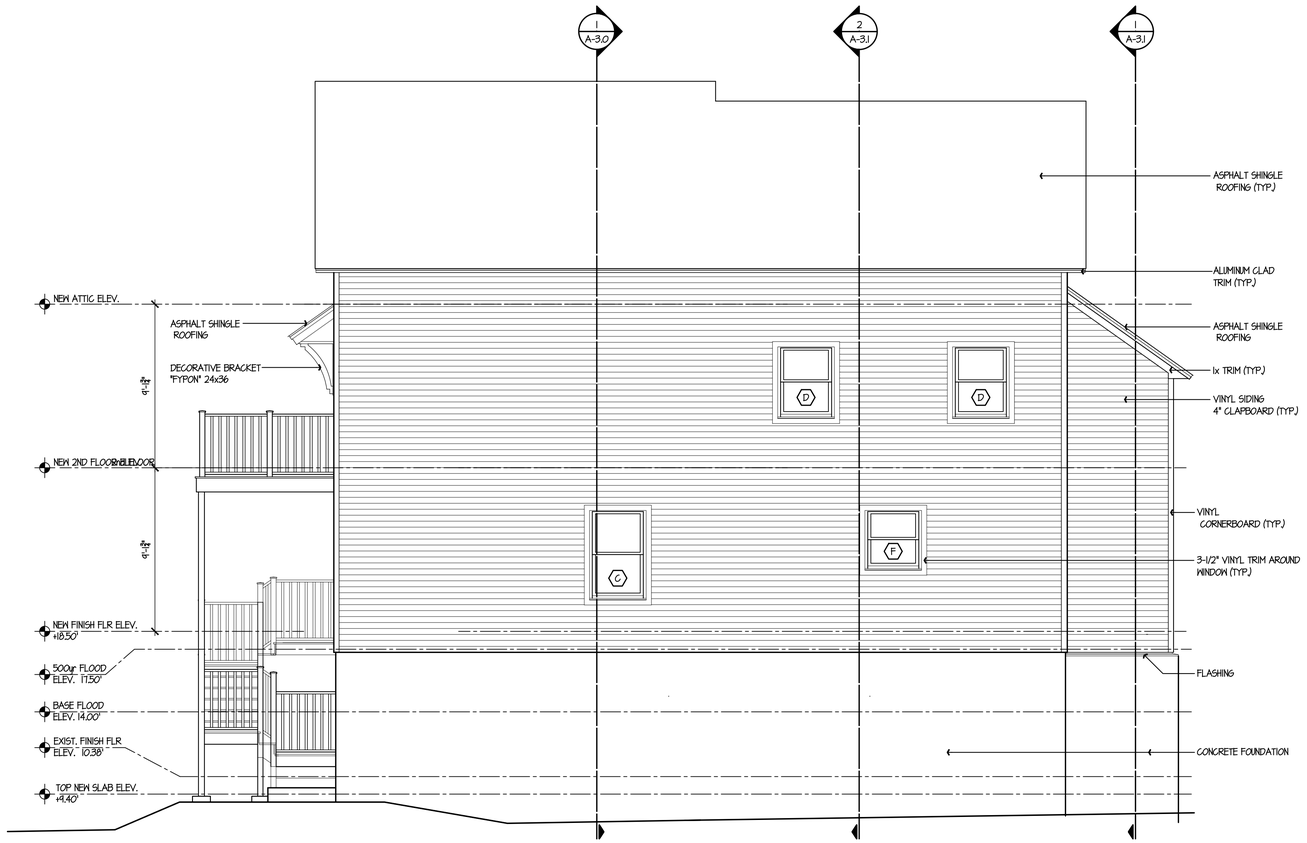

1 A-2.2 NORTH

SCALE: 1/4"= 1'-0"

CAPITAL STUDIO
architects LLC
1379 MAIN STREET EAST HARTFORD CT. 06108
860.289.3262 fax 860.289.3163

THE STATE OF CONNECTICUT DEPARTMENT OF HOUSING (DOH) COMMUNITY DEVELOPMENT BLOCK GRANT - DISASTER RECOVERY (CDBG-DR) OWNER OCCUPIED REHABILITATION and REBUILDING PROGRAM (OORR)

CARLSON RESIDENCE
APPLICATION No. 1939
39 Attawan Avenue
Niantic, CT 06357

date	description	no.

revisions

NORTH ELEVATION

A-2.2

date	19 JUNE 2015
drawn	NWF
scale	AS SHOWN
checked	PM/JP/KG
project no.	1347-12
application no.	1939

Copyright © 2015 Capital Studio Architects, LLC

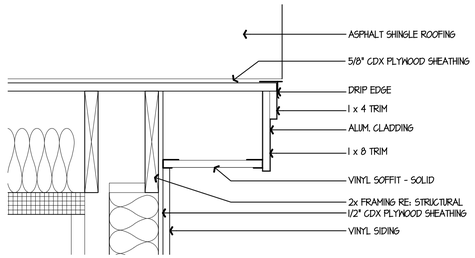

5 A-3.0 DETAIL
SCALE 1-1/2" = 1'0"

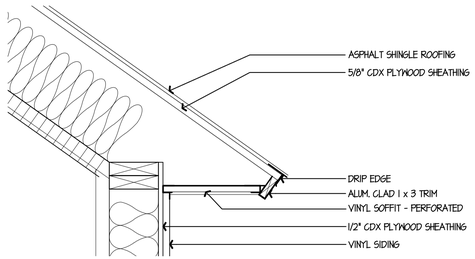

4 A-3.0 DETAIL
SCALE 1-1/2" = 1'0"

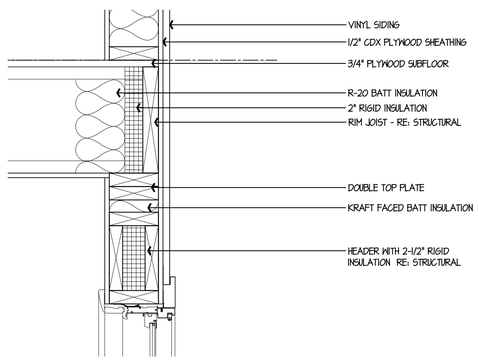

3 A-3.0 DETAIL
SCALE 1-1/2" = 1'0"

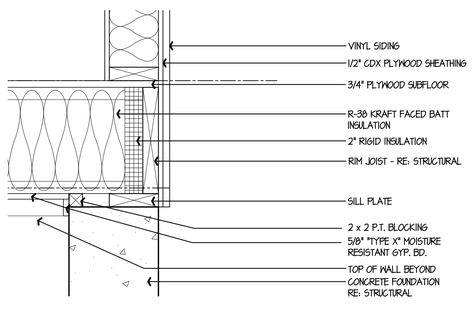

2 A-3.0 DETAIL
SCALE 1-1/2" = 1'0"

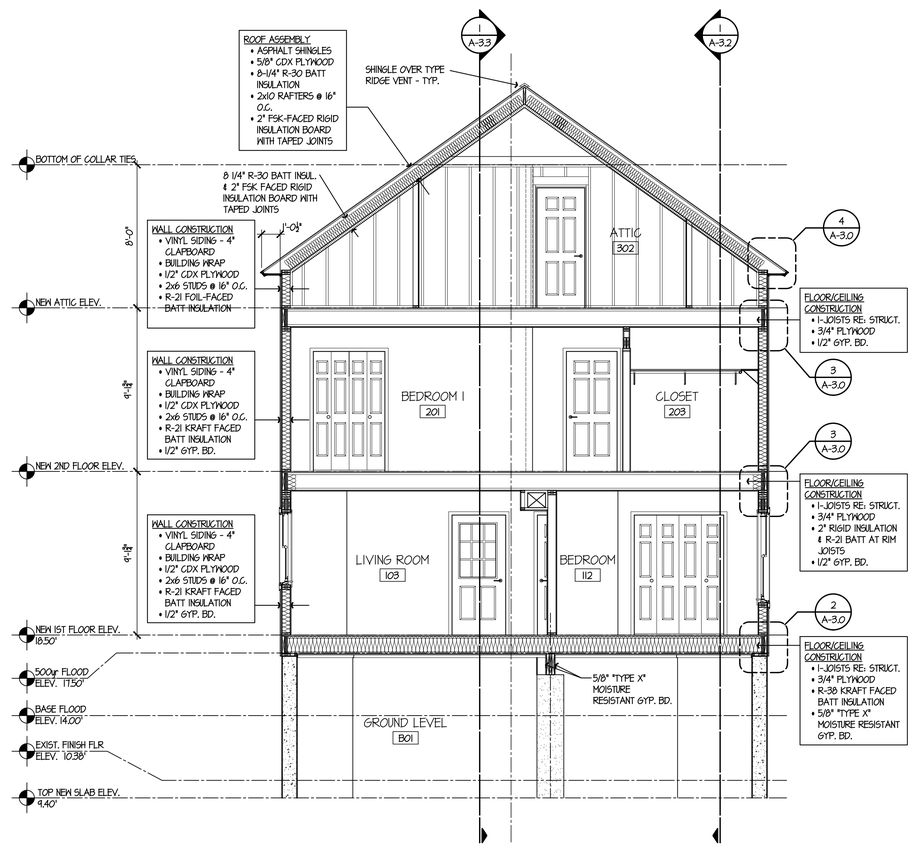

1 A-3.0 SECTION LOOKING WEST
SCALE: 1/4"= 1'-0"

CAPITAL STUDIO
architects LLC
1379 MAIN STREET EAST HARTFORD CT. 06108
860.289.3262 fax 860.289.3163

THE STATE OF CONNECTICUT DEPARTMENT OF HOUSING (DOH) COMMUNITY DEVELOPMENT BLOCK GRANT - DISASTER RECOVERY (CDBG-DR) OWNER OCCUPIED REHABILITATION and REBUILDING PROGRAM (OORR)

CARLSON RESIDENCE
APPLICATION No. 1939
39 Attawan Avenue
Niantic, CT 06357

date	description	no.

revisions

BUILDING SECTION

A-3.0

date	19 JUNE 2015
drawn	NWF
scale	AS SHOWN
checked	PM/JP/KG
project no.	1347-12
application no.	1939

Copyright © 2015 Capital Studio Architects, LLC

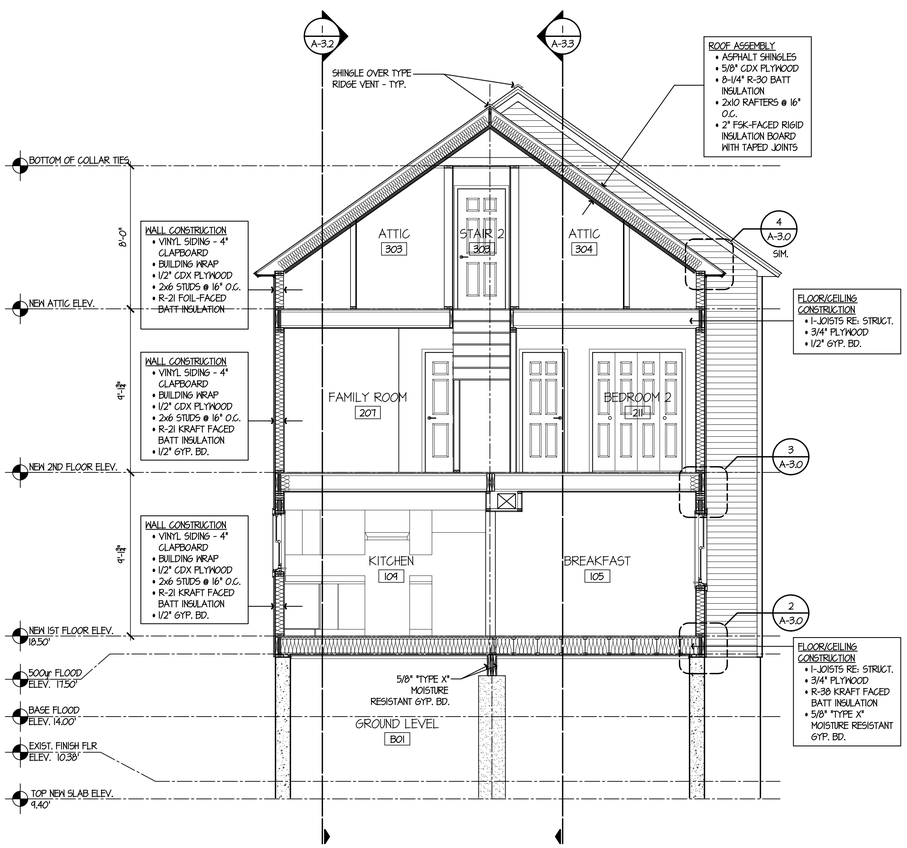

2 A-3.1 SECTION LOOKING EAST

SCALE: 1/4"= 1'-0"

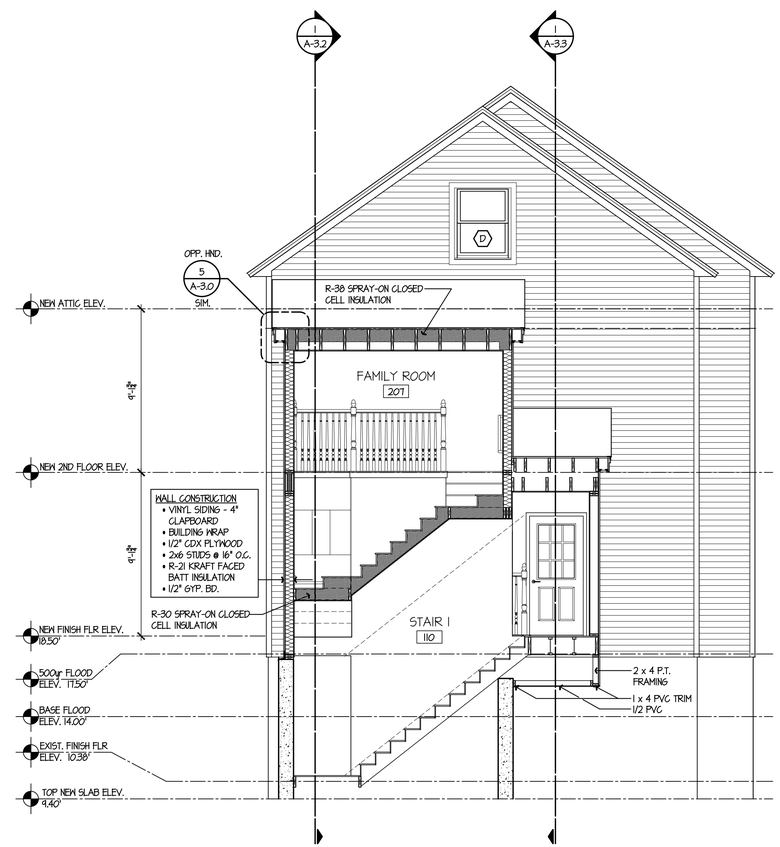

1 A-3.1 SECTION LOOKING EAST

SCALE: 1/4"= 1'-0"

CAPITAL STUDIO
architects LLC
1379 MAIN STREET EAST HARTFORD CT. 06108
860.289.3262 fax 860.289.3163

THE STATE OF CONNECTICUT DEPARTMENT OF HOUSING (DOH) COMMUNITY DEVELOPMENT BLOCK GRANT - DISASTER RECOVERY (CDBG-DR) OWNER OCCUPIED REHABILITATION and REBUILDING PROGRAM (OORR)

CARLSON RESIDENCE
APPLICATION No. 1939
39 Attawan Avenue
Niantic, CT 06357

date	description	no.

revisions

BUILDING SECTIONS

A-3.1

date	19 JUNE 2015
drawn	NWF
scale	AS SHOWN
checked	PM/JP/KG
project no.	1341-12
application no.	1939

Copyright ©2015 Capital Studio Architects, LLC

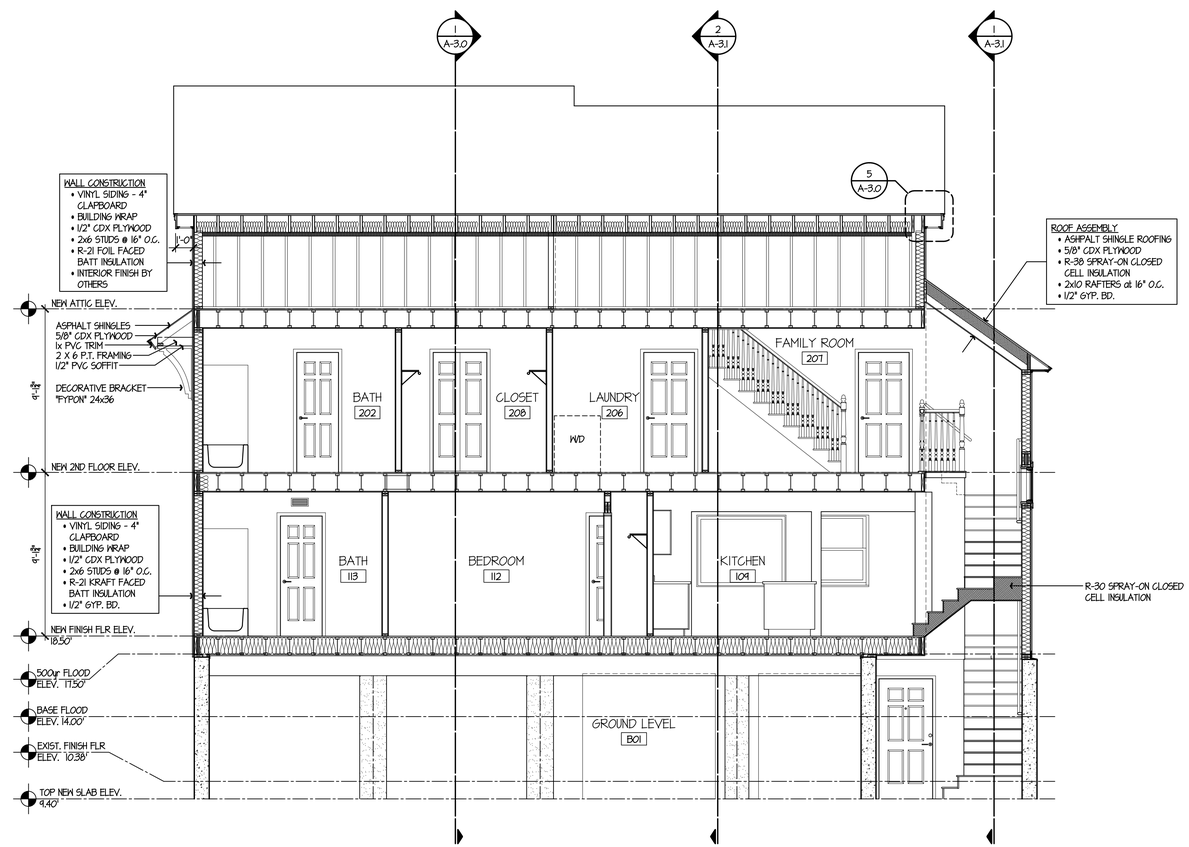

1 A-3.2 SECTION LOOKING EAST

SCALE: 1/4"= 1'-0"

CAPITAL STUDIO
architects LLC
1379 MAIN STREET EAST HARTFORD CT. 06108
860.289.3262 fax 860.289.3163

THE STATE OF CONNECTICUT DEPARTMENT OF HOUSING (DOH) COMMUNITY DEVELOPMENT BLOCK GRANT - DISASTER RECOVERY (CDBG-DR) OWNER OCCUPIED REHABILITATION and REBUILDING PROGRAM (OORR)

CARLSON RESIDENCE
APPLICATION No. 1939
39 Attawan Avenue
Niantic, CT 06357

date	description	no.

revisions

BUILDING SECTION

A-3.2

date	19 JUNE 2015
drawn	NWF
scale	AS SHOWN
checked	PM/JP/KG
project no.	1347-12
application no.	1939

Copyright © 2015 Capital Studio Architects, LLC

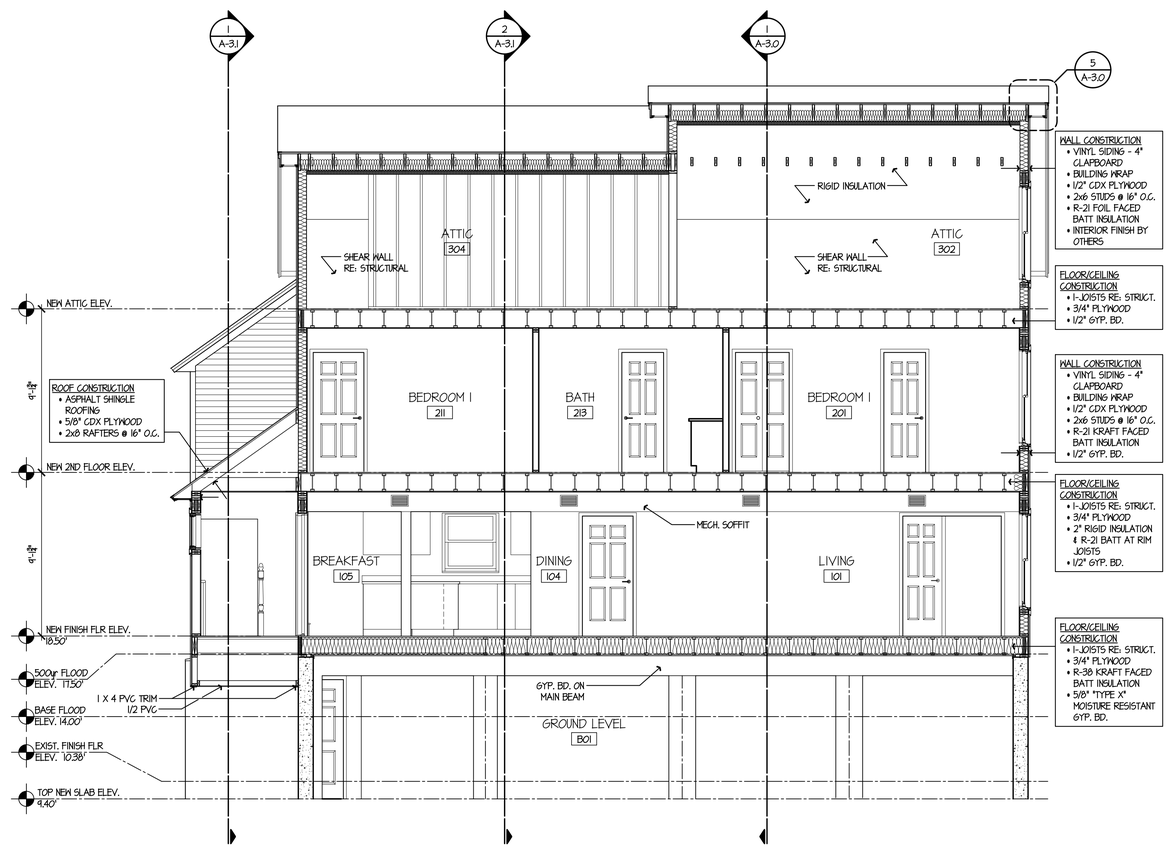

1 A-3.3 SECTION LOOKING NORTH

SCALE: 1/4" = 1'-0"

CAPITAL STUDIO
architects LLC
1379 MAIN STREET EAST HARTFORD CT. 06108
860.289.3262 fax 860.289.3163

THE STATE OF CONNECTICUT DEPARTMENT OF HOUSING (DOH) COMMUNITY DEVELOPMENT BLOCK GRANT - DISASTER RECOVERY (CDBG-DR) OWNER OCCUPIED REHABILITATION and REBUILDING PROGRAM (OORR)

CARLSON RESIDENCE
APPLICATION No. 1939
39 Attawan Avenue
Niantic, CT 06357

date	description	no.
revisions		

BUILDING SECTION

A-3.3

date	19 JUNE 2015
drawn	NMF
scale	AS SHOWN
checked	PM/JP/KG
project no.	1341-12
application no.	1939

Copyright © 2015 Capital Studio Architects, LLC

LEVEL	ROOM NAME and NUMBER	FLOOR: CARPET	FLOOR: RESILIENT FLOORING	FLOOR: CONCRETE	FLOOR: FINISHED HARDWOOD	FLOOR: NONE	WALL: DRYWALL (PRIME 1 COAT, 2 FINISH COATS)	WALL: CONCRETE	WALL: TILE	WALL: NONE	BASE: WOOD BASE (PAINTED)	BASE: NONE	BASE:	BASE:	CEILING: DRYWALL (PAINTED)	CEILING: NONE	CEILING:	CEILING:	REMARKS
GROUND	B01 GROUND LEVEL			●				●				●			●				
GROUND	B02 STAIR 1			●				●				●			●				TREADS AND RISERS BELOW 100 YR. FLOOD TO BE P.T. WOOD
1st FLOOR	101 ENTRY				●		●				●				●				
1st FLOOR	102 MECHANICAL		●				●				●				●				
1st FLOOR	103 LIVING ROOM				●		●				●				●				
1st FLOOR	104 DINING				●		●				●				●				
1st FLOOR	105 BREAKFAST				●		●				●				●				
1st FLOOR	106 ENTRY		●				●				●				●				
1st FLOOR	107 CLOSET		●				●				●				●				PAINTED SHELF & ROD
1st FLOOR	108 PANTRY		●				●				●				●				PAINTED SHELVES
1st FLOOR	109 KITCHEN		●				●				●				●				
1st FLOOR	110 STAIR 1				●		●				●				●				TREADS AND RISERS ABOVE 100 YR. FLOOD TO BE HARDWOOD TREADS AND RISERS BELOW 100 YR. FLOOD TO BE P.T. WOOD
1st FLOOR	111 CLOSET				●		●				●				●				PAINTED SHELF & ROD
1st FLOOR	112 BEDROOM				●		●				●				●				
1st FLOOR	113 BATH		●				●		●		●				●				TILE AT BATHTUB ONLY; REFER TO NOTE 4
2nd FLOOR	201 BEDROOM				●		●				●				●				
2nd FLOOR	202 BATH		●				●		●		●				●				TILE AT BATHTUB ONLY; REFER TO NOTE 4
2nd FLOOR	203 CLOSET				●		●				●				●				PAINTED SHELF & ROD
2nd FLOOR	204 CLOSET				●		●				●				●				PAINTED SHELF & ROD
2nd FLOOR	205 HALL				●		●				●				●				
2nd FLOOR	206 BATH				●		●				●				●				TILE AT BATHTUB ONLY; REFER TO NOTE 4
2nd FLOOR	207 FAMILY ROOM				●		●				●				●				
2nd FLOOR	208 MECHANICAL		●				●				●				●				
2nd FLOOR	209 STAIR 2				●		●				●				●				
2nd FLOOR	210 STAIR 1				●		●				●				●				
2nd FLOOR	211 BEDROOM 2				●		●				●				●				
2nd FLOOR	212 CLOSET				●		●				●				●				PAINTED SHELF & ROD
2nd FLOOR	213 BATH		●				●				●				●				
2nd FLOOR	214 LINEN		●				●				●				●				PAINTED SHELVES
2nd FLOOR	215 MECHANICAL		●				●				●				●				
ATTIC	301 STAIR 2				●		●				●				●				
ATTIC	302 ATTIC					●			●			●				●			
ATTIC	303 ATTIC					●			●			●				●			
ATTIC	304 ATTIC					●			●			●				●			

REFERENCES ALL WALL SURFACES AS ORIENTED ON FLOOR PLAN

PLAN NORTH

REFERENCES NORTH WALL SURFACE AS ORIENTED ON FLOOR PLAN

NOTE: ALL FINISH CLASSIFIGATIONS TO MEET ALL APPLICABLE FIRE CODE REQUIREMENTS & STANDARDS

NOTE:
1. ALL FINISHES SUBJECT TO THE APPROVAL OF THE OWNER, INCLUDING MATERIALS, PATTERNS, COLORS, ETC.
2. CONTRACTOR SHALL PROVIDE OVERSTOCK MATERIALS AS AGREED UPON WITH OWNER.
3. PROVIDE (1) COAT PRIMER, (2) FINISH COATS.
4. CERAMIC TILE BATHTUB SURROUND: CERAMIC TILE OVER DUROCK CEMENT BOARD WITH LATEX PORTLAND CEMENT MORTAR AND GROUT, TILE COUNCIL OF AMERICA SYSTEM B430.

4 / A-7.0 FINISH SCHEDULE

NO SCALE

WINDOW SCHEDULE

LABEL	UNIT	TYPE	MIN. ROUGH OPENING (W x H)
A	TW8452	DOUBLE HUNG	3' 6-1/8" x 5' 4-1/8"
B*	G12	STATIONARY CASEMENT	2' 0-5/8" x 2' 0-5/8"
C	TW8041O	DOUBLE HUNG	3' 2-1/8" x 5' 0-1/8"
D	TW8031O	DOUBLE HUNG	3' 2-1/8" x 4' 0-1/8"
E	P5040	PICTURE	5' 0-3/8" x 4' 0-1/2"
F	TW8032	DOUBLE HUNG	3' 2-1/8" x 3' 4-1/8"

* WINDOW UNIT TO HAVE TEMPERED GLAZING AT SHOWER LOCATIONS

WINDOW NOTES:

1. ALL WINDOW UNITS ARE ANDERSEN CORPORATION SERIES 400 WITH STORMWATCH PROTECTION.

2 / A-7.0 WINDOWS

NO SCALE

DOOR STYLES

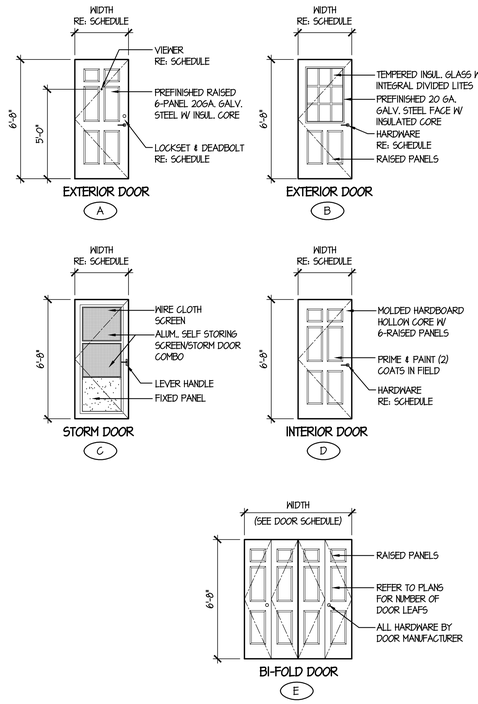

DOORS & HARDWARE

1. INTERIOR DOORS:
   A. MANUFACTURER (MFR.) - MASONITE CORPORATION, TAMPA, FLORIDA (1-800-663-DOOR)
   B. DOOR - HARDBOARD TEXTURE MOLDED 6-PANEL SERIES 1 3/8" W/ THICK HOLLOW CORE.
   C. FINISH - FIELD PRIME + PAINT. COLOR CHOICE BY OWNER.
   D. HARDWARE -
      D.1. HINGES - (3) STANLEY FITM (BRIGHT BRASS).
      D.2. LEVERS - SCHLAGE ACCENT SERIES (STANDARD BRASS).
      D.3. FUNCTIONS - PRIVACY SETS AT BEDROOM & BATHROOM DOORS. ALL OTHER DOORS TO HAVE PASSAGE SETS.
   E. BI-FOLD DOORS TO BE PROVIDED WITH HARDWARE FROM MANUFACTURER.
2. EXTERIOR DOORS
   A. MANUFACTURER (MFR.) - PROVIA, INC., SUGARCREEK, OHIO. (1-800-664-4111)
   B. MODEL - LEGACY STEEL SERIES; PRE-ASSEMBLED, 1 3/4" THICK, 20 GAUGE GALVANIZED STEEL W/ WOOD GRAIN TEXTURE AND INSULATED CORE (ENERGY-STAR QUALIFIED).
   C. FRAME - ALUMINUM CLAD WOOD FRAME BY DOOR MFR..
   D. FINISH - FACTORY FINISH ALL ITEMS. STAIN OR PAINT OPTION & COLOR BY OWNER.
   E. THRESHOLD - SUPPLIED BY DOOR MFR.
   F. HARDWARE - SUPPLIED BY DOOR MFR.
      F.1. HINGES - (3) STANLEY 1T4 (BRIGHT BRASS)
      F.2. EXTERIOR PULL - SCHLAGE CAMELOT SERIES (LIFETIME BRIGHT BRASS) WITH DEADBOLT.
      F.3. INTERIOR LEVER - SCHLAGE ACCENT SERIES (LIFETIME BRIGHT BRASS) WITH THUMB LATCH.
      F.4. VIENER - IVES CORP. MODEL 64B (BRIGHT BRASS)
   G. GLAZING - (where applicable) 1/2" INSULATED TEMPERED GLASS.
   H. MUNTINS - (where applicable) - STEEL INSTALLED IN AIR SPACE BETWEEN PANES.
   I. WEATHER STRIPPING - MFR. STANDARD.
3. EXTERIOR DOORS
   A. MANUFACTURER (MFR.) - THERMA TRU MAUMEE, OHIO. (1-800-843-1628) (1-800 THERMATRU)
   B. MODEL - "SMOOTH-STAR" 20 MINUTE FIBERGLASS MODEL S5FI60
   C. FRAME - "ADJUSTA-FIT 2" STEEL DOOR FRAMES
   D. FINISH - FACTORY FINISH ALL ITEMS. STAIN OR PAINT OPTION & COLOR BY OWNER.
   E. THRESHOLD - SUPPLIED BY DOOR MFR.
   F. HARDWARE - SUPPLIED BY DOOR MFR.
      F.1. HINGES - (3) STANLEY 1T4 (BRIGHT BRASS)
      F.2. EXTERIOR PULL - SCHLAGE ACCENT SERIES (LIFETIME BRIGHT BRASS)
      F.3. INTERIOR LEVER - SCHLAGE ACCENT SERIES (LIFETIME BRIGHT BRASS)
      F.4. VIENER - IVES CORP. MODEL 64B (BRIGHT BRASS)
   G. GLAZING - (where applicable) 1/2" INSULATED TEMPERED GLASS.
   H. MUNTINS - (where applicable) - STEEL INSTALLED IN AIR SPACE BETWEEN PANES.
   I. WEATHER STRIPPING - MFR. STANDARD.
4. STORM DOORS:
   A. MANUFACTURER (MFR.) - GERKIN WINDOWS & DOORS, SIOUX CITY, IA (1-800-475-5061)
   B. MODEL - CABRIO SERIES; MODEL 802 SELF-STORING UNIT WITH RETRACTABLE SCREEN.
   C. COLOR - CHOSEN BY OWNER
   D. HARDWARE - SEVILLE (BRIGHT BRASS) LEVER EACH SIDE.

3 / A-7.0 DOORS

NO SCALE

DOOR SCHEDULE

LABEL	TYPE	STYLE	DOOR	SIZE (W x H)	NOTES
B01	EXTERIOR	A	3	3'-0" x 6'-8"	
B02	EXTERIOR	A	3	2'-8" x 6'-8"	
101	EXTERIOR	A & C	2	2'-8" x 6'-8"	
102	INTERIOR	D	1	3'-0" x 6'-8"	
103	INTERIOR	D	1	2'-4" x 6'-8"	
104	INTERIOR	D	1	2'-4" x 6'-8"	
105	BI-FOLD	E	1	5'-0" x 6'-8"	
106	INTERIOR	D	1	2'-10" x 6'-8"	
107	EXTERIOR	B	2	3'-0" x 6'-8"	WOOD FRAME (NO ALUM. CLADDING) COORDINATE THRESHOLD STYLE
108	INTERIOR	D	1	2'-8" x 6'-8"	
109	BI-FOLD	E	1	4'-0" x 6'-8"	
201	EXTERIOR	A & C	2	2'-8" x 6'-8"	
202	INTERIOR	D	1	2'-4" x 6'-8"	
203	BI-FOLD	E	1	3'-0" x 6'-8"	
204	BI-FOLD	E	1	4'-0" x 6'-8"	
205	INTERIOR	D	1	2'-10" x 6'-8"	
206	INTERIOR	D	1	2'-10" x 6'-8"	
207	BI-FOLD	E	1	2'-6" x 6'-8"	
208	INTERIOR	D	1	2'-10" x 6'-8"	
209	BI-FOLD	E	1	5'-0" x 6'-8"	
210	INTERIOR	D	1	2'-4" x 6'-8"	
211	BI-FOLD	E	1	1'-6" x 6'-8"	
212	INTERIOR	D	1	2'-4" x 6'-8"	
213	BI-FOLD	E	1	2'-4" x 6'-8"	LOUVERED DOOR
301	INTERIOR	A	1	2'-8" x 6'-8"	

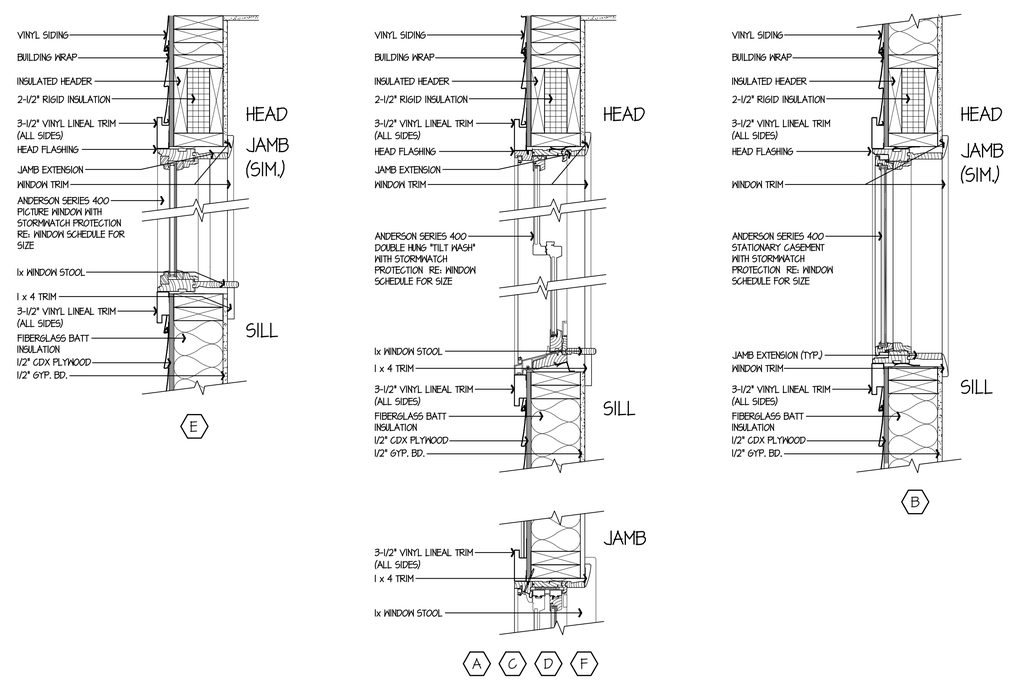

1 / A-7.0 WINDOW DETAILS

SCALE 1-1/2" = 1'0"

CAPITAL STUDIO architects LLC
1379 MAIN STREET EAST HARTFORD CT. 06108
860.289.3262 fax 860.289.3163

THE STATE OF CONNECTICUT DEPARTMENT OF HOUSING (DOH) COMMUNITY DEVELOPMENT BLOCK GRANT - DISASTER RECOVERY (CDBG-DR) OWNER OCCUPIED REHABILITATION and REBUILDING PROGRAM (OORR)

CARLSON RESIDENCE
APPLICATION No. 1939
39 Attawan Avenue
Niantic, CT 06357

date	description	no.

revisions

WINDOW & DOOR SCHEDULES

A-7.0

date	19 JUNE 2015
drawn	NWF
scale	AS SHOWN
checked	PM/JP/KG
project no.	1347-12
application no.	1939

Copyright © 2014 Capital Studio Architects, LLC

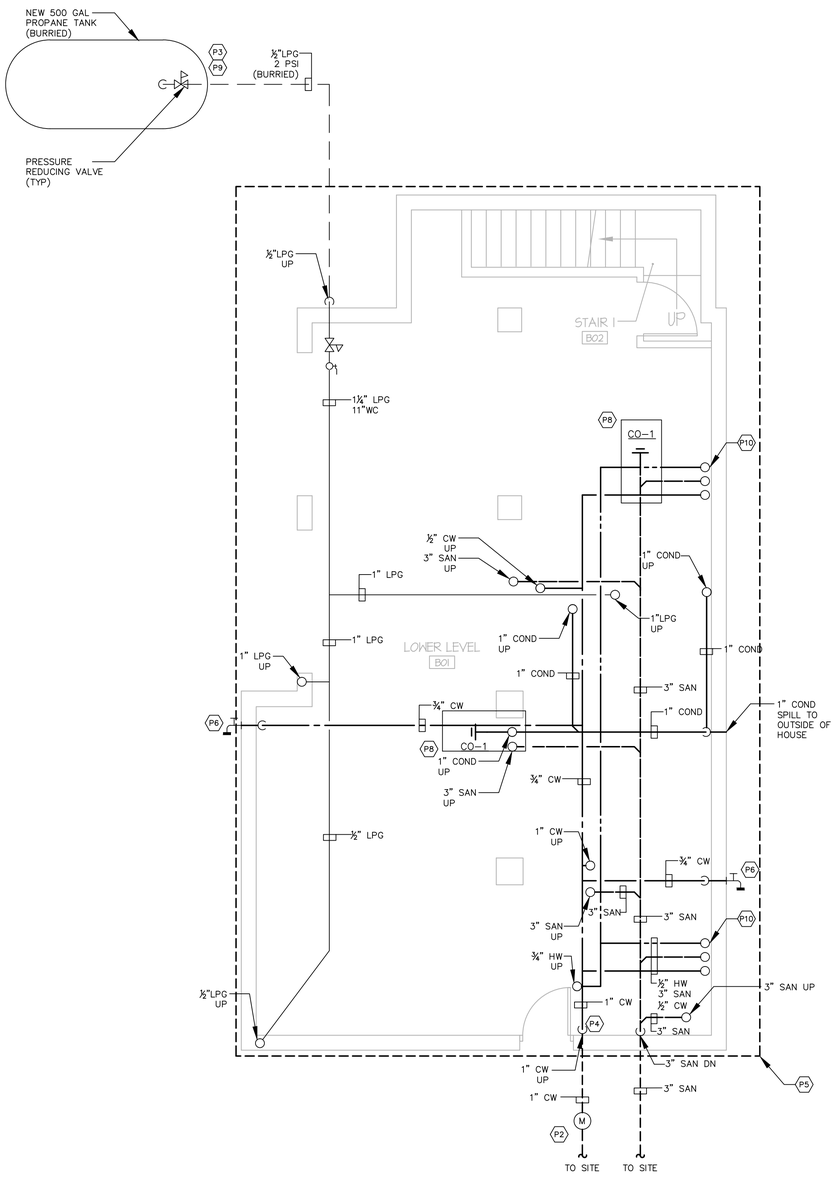

1 A-1.0 GROUND LEVEL PLAN

SCALE: 1/4"= 1'-0"

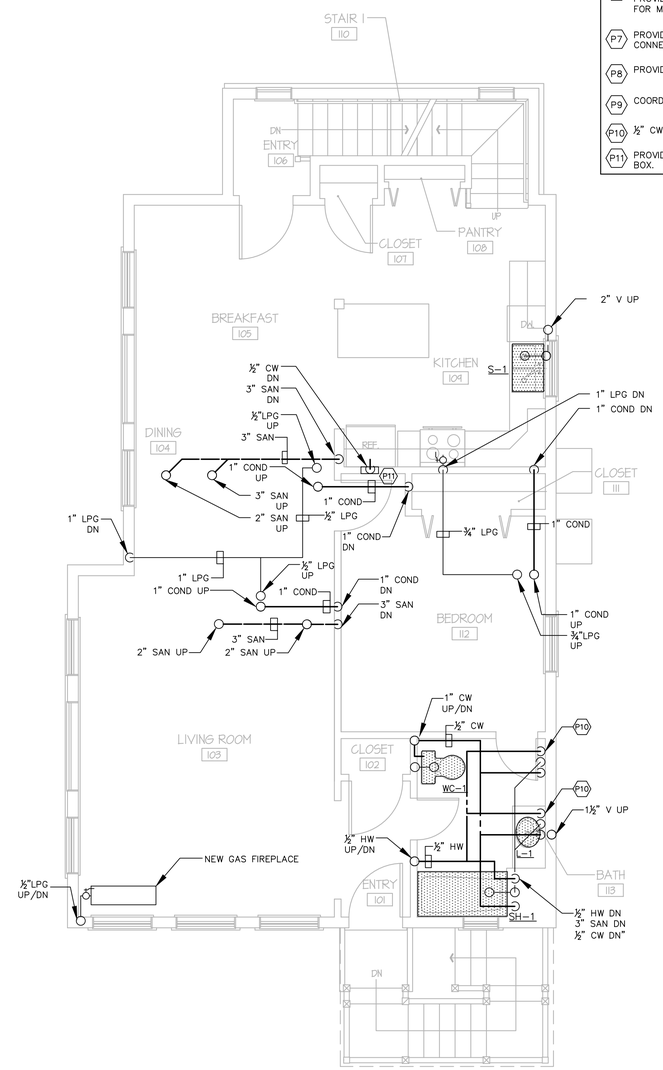

2 A-1.0 FIRST FLOOR

SCALE: 1/4"= 1'-0"

GENERAL NOTES ALL TRADES

1. PLUMBING ITEMS INCLUDING BUT NOT LIMITED TO PIPING, EQUIPMENT, ETC SHALL BE INSTALLED ABOVE THE FLOOD PLANE AS DETERMINED BY THE ARCHITECTURAL PLANS.
2. WORK SHALL BE COORDINATED WITH ARCHITECTURAL PLANS INCLUDING ACCESS PANELS FOR VALVES AND EQUIPMENT, ETC.

PLUMBING KEY NOTES

P1 PROVIDE WATER-TITE MODEL #W2700 HA WASHING MACHINE OUTLET BOX.

P2 PROVIDE NEW WATER METER NEAR PROPERTY LINE ON STREET. METER SHALL BE INSTALLED IN METER PIT. VERIFY ALL INSTALLATION LOCATIONS AND PIT REQUIREMENTS WITH UTILITY COMPANY PRIOR TO BIDDING AND INSTALLATION.

P3 PROVIDE NEW 500 GAL BELOW GROUND PROPANE TANK. TANK SHALL BE ASME RATED. INSTALL TANK PER ALL LOCAL CODES AND NFPA 58. ANCHOR TANK TO CONCRETE PAD PER FEMA AND ARCHITECTURAL AND STRUCTURAL DETAILS.

P4 PROVIDE PRESSURE RELIEF VALVE AND ISOLATION VALVE ON RISE.

P5 ALL NEW AND EXISTING DOMESTIC COLD WATER SUPPLY PIPING EXPOSED BELOW THE PROPERTY SHALL BE INSULATED WITH ½" FIBERGLASS INSULATION WITH CONTINUOUS PVC JACKETING. ALL HOT AND COLD WATER PIPING EXPOSED BELOW THE PROPERTY SHALL BE HEAT TRACED WITH SELF REGULATION HEAT TRACE CABLE MODEL H612 AS MANUFACTURED BY PENTAIR. CABLE SHALL BE 120V INPUT AND HAVE AN OUTPUT OF 6W PER FOOT. PROVIDE ONE HEAT TAPE FOR HOT WATER PIPING AND ONE HEAT TAPE FOR COLD WATER PIPING. PROVIDE ALL NECESSARY ACCESSORIES NEEDED FOR COMPLETE AND OPERATIONAL SYSTEM. PROVIDE ONE 20A/120V DEDICATED POWER CIRCUIT FOR EVERY 150 FEET OF HEAT TRACE CABLE.

P6 PROVIDE NEW EXTERIOR WALL HYDRANT 3' ABOVE FINAL FINISHED GRADE. PROVIDE LOW POINT DRAIN ON PIPING DROP FROM HOUSE. SEE DETAIL 2/P5.0 FOR MORE DETAILS.

P7 PROVIDE NEW WATER HEATER. REFER TO SCHEDULES FOR MORE DETAILS. CONNECT NEW PIPING AS INDICATED ON FLOOR PLANS AND DETAILS.

P8 PROVIDE ACCESS DOOR FOR CLEANOUT.

P9 COORDINATE TANK LOCATION WITH SITE PLAN.

P10 ½" CW, ½" HW, AND 3" SAN UP IN CABINET TO PLUMBING FIXTURE.

P11 PROVIDE OATY MODEL #39130 I2K ¼" TURN, COPPER, LOW-LEAD ICE-MAKER BOX.

CAPITAL STUDIO architects LLC
1379 MAIN STREET EAST HARTFORD CT. 06108
860.289.3262 fax 860.289.3163

THE STATE OF CONNECTICUT DEPARTMENT OF HOUSING (DOH) COMMUNITY DEVELOPMENT BLOCK GRANT - DISASTER RECOVERY (CDBG-DR) DOH OCCUPIED REHABILITATION and REBUILDING PROGRAM (OORR)

CARLSON RESIDENCE
APPLICATION No. 1939
39 ATTAWAN AVENUE
NIANTIC, CT 06357

CES Consulting Engineering Services, Inc.
511 Middle Street
Middletown, CT 06457
Tel.(860) 632-1682
Fax.(860) 632-1768
CES #2014064.00

date	description	no.

revisions

P-1.0

date	JUNE 19, 2015
drawn	ANK
scale	AS SHOWN
checked	DTB
project no.	2014064.00
application no.	1939

Copyright © 2014 Capital Studio Architects, LLC

GENERAL NOTES ALL TRADES

1. PLUMBING ITEMS INCLUDING BUT NOT LIMITED TO PIPING, EQUIPMENT, ETC SHALL BE INSTALLED ABOVE THE FLOOD PLANE AS DETERMINED BY THE ARCHITECTURAL PLANS.
2. WORK SHALL BE COORDINATED WITH ARCHITECTURAL PLANS INCLUDING ACCESS PANELS FOR VALVES AND EQUIPMENT, ETC.

PLUMBING KEY NOTES

- (P1) PROVIDE WATER-TITE MODEL #W2700 HA WASHING MACHINE OUTLET BOX.
- (P2) PROVIDE NEW WATER METER NEAR PROPERTY LINE ON STREET. METER SHALL BE INSTALLED IN METER PIT. VERIFY ALL INSTALLATION LOCATIONS AND PIT REQUIREMENTS WITH UTILITY COMPANY PRIOR TO BIDDING AND INSTALLATION.
- (P3) PROVIDE NEW 500 GAL BELOW GROUND PROPANE TANK. TANK SHALL BE ASME RATED. INSTALL TANK PER ALL LOCAL CODES AND NFPA 58. ANCHOR TANK TO CONCRETE PAD PER FEMA AND ARCHITECTURAL AND STRUCTURAL DETAILS.
- (P4) PROVIDE PRESSURE RELIEF VALVE AND ISOLATION VALVE ON RISE.
- (P5) ALL NEW AND EXISTING DOMESTIC COLD WATER SUPPLY PIPING EXPOSED BELOW THE PROPERTY SHALL BE INSULATED WITH ½" FIBERGLASS INSULATION WITH CONTINUOUS PVC JACKETING. ALL HOT AND COLD WATER PIPING EXPOSED BELOW THE PROPERTY SHALL BE HEAT TRACED WITH SELF REGULATION HEAT TRACE CABLE MODEL H612 AS MANUFACTURED BY PENTAIR. CABLE SHALL BE 120V INPUT AND HAVE AN OUTPUT OF 6W PER FOOT. PROVIDE ONE HEAT TAPE FOR HOT WATER PIPING AND ONE HEAT TAPE FOR COLD WATER PIPING. PROVIDE ALL NECESSARY ACCESSORIES NEEDED FOR COMPLETE AND OPERATIONAL SYSTEM. PROVIDE ONE 20A/120V DEDICATED POWER CIRCUIT FOR EVERY 150 FEET OF HEAT TRACE CABLE.
- (P6) PROVIDE NEW EXTERIOR WALL HYDRANT 3' ABOVE FINAL FINISHED GRADE. PROVIDE LOW POINT DRAIN ON PIPING DROP FROM HOUSE. SEE DETAIL 2/P5.0 FOR MORE DETAILS.
- (P7) PROVIDE NEW WATER HEATER. REFER TO SCHEDULES FOR MORE DETAILS. CONNECT NEW PIPING AS INDICATED ON FLOOR PLANS AND DETAILS.
- (P8) PROVIDE ACCESS DOOR FOR CLEANOUT.
- (P9) COORDINATE TANK LOCATION WITH SITE PLAN.
- (P10) ½" CW, ½" HW, AND 3" SAN UP IN CABINET TO PLUMBING FIXTURE.
- (P11) PROVIDE OATY MODEL #39130 I2K ¼" TURN, COPPER, LOW-LEAD ICE-MAKER BOX.

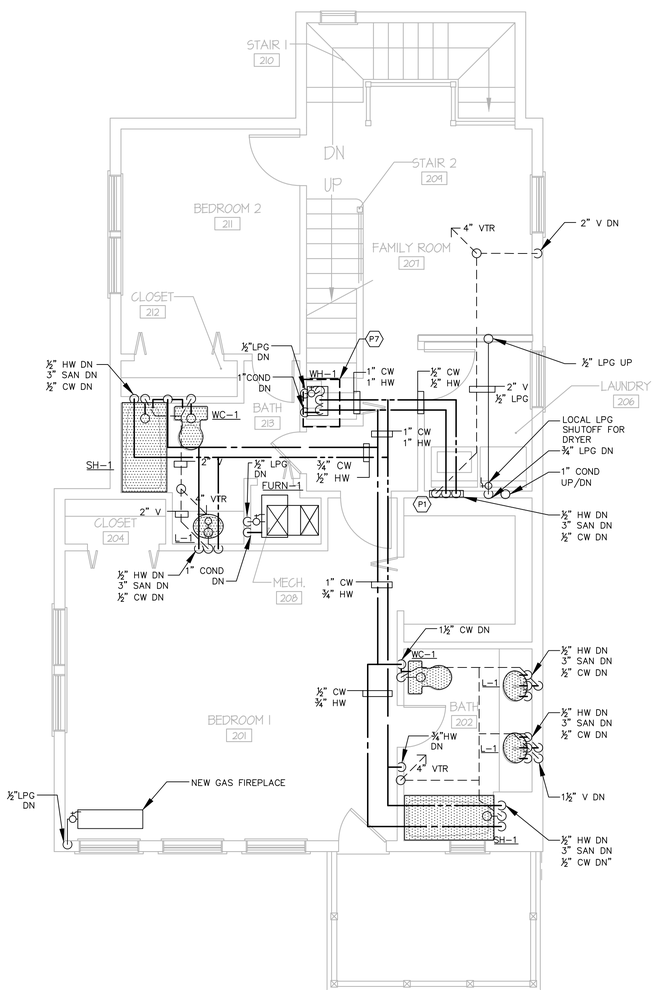

1 A-1.0 SECOND FLOOR

SCALE: 1/4"= 1'-0"

NORTH

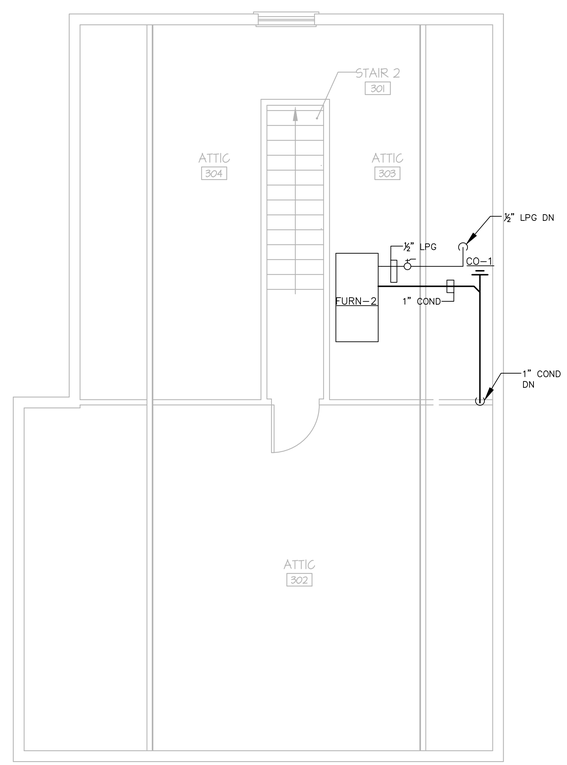

2 A-1.0 ATTIC PLAN

SCALE: 1/4"= 1'-0"

NORTH

CAPITAL STUDIO architects LLC
1379 MAIN STREET EAST HARTFORD CT. 06108
860.289.3262 fax 860.289.3163

THE STATE OF CONNECTICUT DEPARTMENT OF HOUSING (DOH) COMMUNITY DEVELOPMENT BLOCK GRANT - DISASTER RECOVERY (CDBG-DR) DOH OCCUPIED REHABILITATION and REBUILDING PROGRAM (OORR)

CARLSON RESIDENCE
APPLICATION No. 1939
39 ATTAWAN AVENUE
NIANTIC, CT 06357

CES Consulting Engineering Services, Inc.
511 Middle Street
Middletown, CT 06457
Tel. (860) 632-1682
Fax. (860) 632-1768
CES #2014064.00

date	description	no.

revisions

P-1.1

date	JUNE 19, 2015
drawn	ANK
scale	AS SHOWN
checked	DTB
project no.	2014064.00
application no.	1939

Copyright © 2014 Capital Studio Architects, LLC

PLUMBING SYMBOL LEGEND

SYMBOL	DESCRIPTION
M	WATER METER
	THERMOMETER
	PRESSURE REGULATOR
	CONNECT NEW TO EXISTING
	VENT THRU ROOF

PLUMBING ABBREVIATIONS

ABBREVIATION	DESCRIPTION
BTU	BRITISH THERMAL UNIT
CO	CLEANOUT
CW	COLD WATER
COND	CONDENSATE
DN	DOWN
ET	EXPANSION TANK
HB	HOSE BIBB
HW	HOT WATER
LPG	LIQUIFIED PETROLEUM GAS
TYP	TYPICAL
V	VENT
VTR	VENT THRU ROOF

PLUMBING PIPING LEGEND

SYMBOL	DESCRIPTION
	NEW CW BURRIED
	NEW CW
	EXISTING CW
	NEW SAN BURRIED
	NEW SAN
	EXISTING SAN
	NEW HW
	EXISTING HW
	NEW NG BURRIED
	NEW NG
	EXISTING NG
	NEW V
	EXISTING V
	NEW COND
	DETAIL LINE
	90° ELBOW DOWN
	90° ELBOW UP
	TEE UP
	TEE DOWN
	DROP AND RUN
	TEE OFF TOP OF PIPE
	TEE OFF BOTTOM OF PIPE
	CLEANOUT
	HOSE BIBB

WATER HEATER SCHEDULE-GAS FIRED

SYMBOL	MANUFACTURER/ MODEL NUMBER	TYPE	LOCATION	FUEL TYPE	BTUH INPUT	GPM	EWT (°F)	LWT (°F)	ELEC DATA AMPS-VOLTS-PH	REMARKS
WH-1	RINNAI/RUR98IP	I	MECH RM	PROPANE	199,000	6.6	45	105	8A-120V-1	ALL

NOTES:
I = INSTANTANEOUS TYPE HEATER

REMARKS:
1. REFER TO DETAIL FOR PIPING ARRANGEMENT.
2. PROVIDE PVC INTAKE AND VENT. INSTALL INTAKE AND VENTING PER INSTALLATION INSTRUCTION.

PLUMBING FIXTURE SCHEDULE

SYMBOL	MANUFACTURER/ MODEL NUMBER	DESCRIPTION OF FIXTURE	TRIM AND ACCESSORIES	REMARKS
L-1	AMERICAN STANDARD "CADET" MODEL 0427.444EC	LAVATORY: ACCESSIBLE, ROUND COUNTERTOP SINGLE BOWL, VITREOUS CHINA LAVATORY	SYMMONS "ALLURA" TWO HANDLE FAUCET WITH METAL DRAIN ASSEMBLY SLC-4712-1.5. BRAIDED SUPPLY, SHUTOFF VALVE & ESCUTCHEON.	#1,2
S-1	ELKAY "LUSTERTONE" MODEL # LR3321PD	SINK: COUNTERTOP (4)-1½" DIA FAUCET HOLES 4" CENTER, SELF RIMMITER, 8 1/8"DEEP.	SYMMONS SYMMETRIX, MANUAL OPERATED, CHROME PLATED FAUCET, SINGLE LEVER, 2.2 GPM, MODEL # S-23-LP, (2) CHROME PLATED GRID DRAIN ASSEMBLY # LKPD-1. BRAIDED SUPPLY, SHUTOFF VALVE & ESCUTCHEON.	#2
SH-1	AQUARIUS MODEL#G6030 TO CS	SHOWER-TUB: 60"x31.875"x16.25" ONE PIECE ACRYLIC WITH CHROME GRID DRAIN.	AMERICAN STANDARD "COPELAND" MODEL T005.502 BATH/SHOWER TRIM KIT.	#1,2
WC-1	AMERICAN STANDARD "CADET" MODEL # 2403.128	WATER CLOSET: STANDARD,TANK TYPE, FLOOR MOUNTED, ELONGATED BOWL, VITREOUS CHINA	BRAIDED SUPPLY, SHUTOFF VALVE & ESCUTCHEON.	#1,2

REMARKS:

1. COLOR SHALL BE WHITE.
2. PROVIDE ISOLATION VALVES AT THE PIPE CONNECTIONS.

PLUMBING FIXTURE CONNECTION SCHEDULE

FIXTURE TYPE	WASTE CONNECTION	VENT CONNECTION	COLD WATER CONNECTION	HOT WATER CONNECTION
HOSE BIB	–	–	3/4"	3/4"
LAVATORY	1 1/2"	1 1/2"	1/2"	1/2"
SHOWER	3"	1 1/2"	1/2"	1/2"
SINK	1 1/2"	1 1/2"	1/2"	1/2"
WATER CLOSET (TANK TYPE)	4"	2"	1/2"	–

NOTES:
1. REFER TO ARCHITECTURAL DRAWINGS FOR ALL PLUMBING FIXTURE MOUNTING HEIGHTS.
2. ALL PIPE TRAPS AT SINKS AND LAVATORIES SHALL BE CHROME PLATED BRASS.

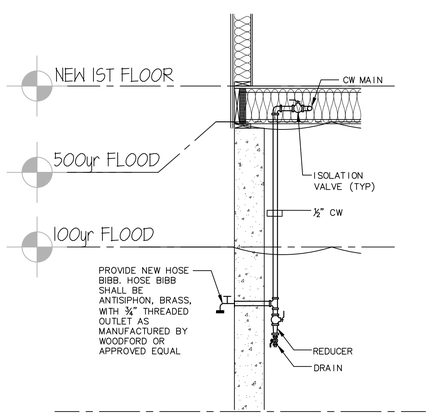

2 HOSE BIBB CW SUPPLY DETAIL
N.T.S.

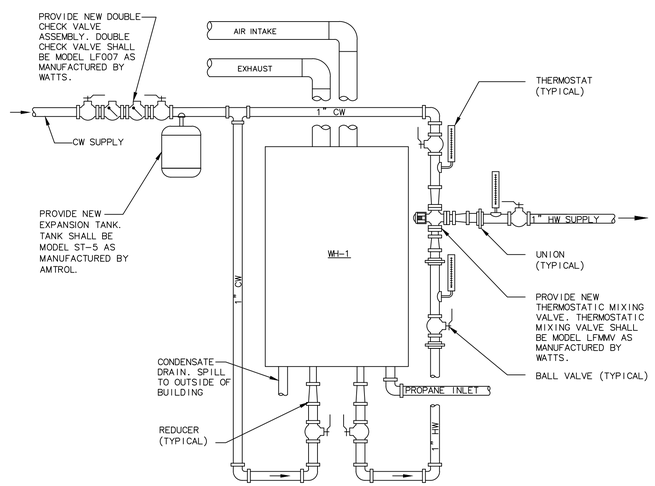

1 WATER HEATER PIPING DIAGRAM
N.T.S.

GENERAL PROCEDURES ALL TRADES

1. THESE SPECIFICATIONS ARE APPLICABLE TO ALL PLUMBING DRAWINGS UNLESS NOTED OTHERWISE.
2. DESCRIPTION
   A. THIS PROJECT COMPRISES ALTERATIONS AND RENOVATIONS TO THE EXISTING BUILDING. THE EXISTING BUILDING IS CURRENTLY OCCUPIED AND THE PROJECT WILL PROCEED IN A MANNER WHICH WILL MINIMIZE ANY INCONVENIENCE TO THE BUILDING OCCUPANTS.
   B. SCOPE OF WORK CONSISTS OF INSTALLATION OF MATERIALS TO BE FURNISHED UNDER THE CONTRACT DOCUMENTS AND WITHOUT LIMITING GENERALITY THEREOF CONSISTS OF FURNISHING LABOR, MATERIALS, EQUIPMENT, HOISTING, PLANT, TRANSPORTATION, RIGGING, STAGING, APPURTENANCES, AND SERVICES NECESSARY AND/OR INCIDENTAL TO PROPERLY COMPLETE ALL WORK AS SHOWN ON THE DRAWINGS AND AS DESCRIBED HEREIN.
3. DEFINITIONS: THE FOLLOWING DEFINITIONS APPLY TO THIS CONTRACT
   A. FURNISH: THE TERM "FURNISH" MEANS TO "SUPPLY AND DELIVER TO THE PROJECT SITE, READY FOR UNLOADING, UNPACKING, ASSEMBLY, INSTALLATION, AND SIMILAR OPERATIONS."
   B. INSTALL: THE TERM "INSTALL" IS USED TO DESCRIBE OPERATIONS AT PROJECT SITE INCLUDING THE ACTUAL "UNLOADING, UNPACKING, ASSEMBLY, ERECTION, PLACING, ANCHORING, APPLYING, WORKING TO DIMENSION, FINISHING, CURING, PROTECTING, CLEANING, AND SIMILAR OPERATIONS."
   C. PROVIDE: THE TERM "PROVIDE" MEANS "TO FURNISH AND INSTALL, COMPLETE AND READY FOR THE INTENDED USE."
   D. REMOVE: THE TERM REMOVE MEANS TO DISCONNECTFROM ITS PRESENT POSITION, REMOVE FROM THE PREMISES AND TO DISPOSE OF IN A LEGAL MANNER.'
   E. SUBSTITUTIONS: 'SUBSTITUTIONS' ARE REQUESTS FOR CHANGES IN PRODUCTS, MATERIALS AND METHODS OF CONSTRUCTION AS PROPOSED BY THE CONTRACTOR AFTER AWARD OF THE CONTRACT.
4. DRAWINGS
   A. PROVIDE ALL MATERIALS, EQUIPMENT AND LABOR NECESSARY TO COMPLETE THE WORK OUTLINED ON THESE CONTRACT DOCUMENTS. THE CONTRACTOR IS TO NOTE THAT THESE DOCUMENTS ARE DIAGRAMMATIC ONLY AND THAT FINAL PLACEMENT OF EQUIPMENT OR DEVICES IN THE FIELD MAY NOT DIRECTLY CORRESPOND TO THAT WHICH IS SHOWN ON THE DRAWINGS. IF A CONFLICT IN POSITIONING OCCURS THE CONTRACTOR IS TO NOTIFY THE ENGINEER IMMEDIATELY TO ASCERTAIN WHAT THE INTENT WAS BY THE DESIGN PROFESSIONAL.
5. SURVEY AND MEASUREMENTS:
   A. PRIOR TO SUBMITTING BID, VISIT SITE AND IDENTIFY EXISTING CONDITIONS AND DIFFICULTIES THAT WILL AFFECT WORK TO BE PERFORMED. NO COMPENSATION WILL BE GRANTED FOR ADDITIONAL WORK CAUSED BY UNFAMILIARITY WITH SITE CONDITIONS THAT ARE VISIBLE OR READILY IDENTIFIED BY EXPERIENCED OBSERVERS. INCLUDE IN THE BID ALL DEMOLITION WORK REQUIRED.
   B. DO NOT SCALE DRAWINGS. SCALE INDICATED ON DRAWINGS IS FOR ESTABLISHING REFERENCE POINTS ONLY. ACTUAL FIELD CONDITIONS SHALL GOVERN ALL DIMENSIONS.
   C. PRIOR TO ORDERING ANY MATERIALS AND EQUIPMENT, THOROUGHLY REVIEW THE SITE CONDITIONS TO DETERMINE IF ADEQUATE CLEARANCES AND ACCESS IS ALLOWED TO INSTALL THE COMPONENTS. ORDER EQUIPMENT BROKEN DOWN AS NECESSARY TO ALLOW FOR PROPER RIGGING THROUGH THE PROJECT AREA. PROVIDE ALL NECESSARY ALTERATIONS TO THE STRUCTURE OF THE BUILDING AS NECESSARY TO RIG THE EQUIPMENT IN PLACE.
   D. ARRANGE INSTALLATION TO PROVIDE ACCESS TO EQUIPMENT FOR EASY MAINTENANCE AND REPAIR.
6. CODES AND STANDARDS: ALL WORK SHALL BE COMPLETED IN ACCORDANCE WITH THE LATEST STATE OF CONNECTICUT ACCEPTED VERSION OF THE FOLLOWING
   A. INTERNATIONAL RESIDENTIAL CODE
   B. INTERNATIONAL BUILDING CODE
   C. INTERNATIONAL PLUMBING CODE
   D. INTERNATIONAL MECHANICAL CODE
   E. NATIONAL ELECTRIC CODE (NFPA 70)
   F. THE LIFE SAFETY CODE (NFPA 101)
7. PERMITS AND FEES: THE CONTRACTOR SHALL GIVE ALL NECESSARY NOTICES, OBTAIN ALL PERMITS; AND PAY ALL GOVERNMENT AND STATE SALES TAXES AND FEES WHERE APPLICABLE, AND OTHER COSTS, INCLUDING UTILITY CONNECTIONS OR EXTENSIONS IN CONNECTION WITH THE WORK, FILE ALL NECESSARY DRAWINGS, PREPARE ALL DOCUMENTS AND OBTAIN ALL NECESSARY APPROVALS OF ALL GOVERNMENTAL AND STATE DEPARTMENTS HAVING JURISDICTION, OBTAIN ALL REQUIRED CERTIFICATES OF INSPECTION FOR HIS WORK, AND DELIVER A COPY TO THE OWNER AND ENGINEER BEFORE REQUEST FOR ACCEPTANCE AND FINAL PAYMENT FOR THE WORK.
8. SHOP DRAWINGS:
   A. SUBMIT NEWLY PREPARED INFORMATION, DRAWN TO ACCURATE SCALE OF 1/4"=1'0". HIGHLIGHT, ENCIRCLE, OR OTHERWISE INDICATE DEVIATIONS FROM THE CONTRACT DOCUMENTS. DO NOT REPRODUCE CONTRACT DOCUMENTS OR COPY STANDARD INFORMATION AS THE BASIS OF SHOP DRAWINGS. STANDARD INFORMATION PREPARED WITHOUT SPECIFIC REFERENCE TO THE PROJECT IS NOT CONSIDERED SHOP DRAWINGS.
   B. SHOP DRAWINGS INCLUDE EQUIPMENT SUBMITTALS, FABRICATION AND INSTALLATION DRAWINGS, SETTING DIAGRAMS, SCHEDULES, PATTERNS, TEMPLATES AND SIMILAR DRAWINGS. INCLUDE THE FOLLOWING INFORMATION:
      a. DIMENSIONS.
      b. IDENTIFICATION OF PRODUCTS AND MATERIALS INCLUDED.
      c. COMPLIANCE WITH SPECIFIED STANDARDS AND PERFORMANCE DATA AS INDICATED.
      d. NOTATION OF COORDINATION REQUIREMENTS.
      e. NOTATION OF DIMENSIONS ESTABLISHED BY FIELD MEASUREMENT.
      f. SUBMIT 3 BLACK-LINE PRINTS AND 2 ADDITIONAL PRINTS WHERE REQUIRED FOR MAINTENANCE MANUALS, PLUS THE NUMBER OF PRINTS NEEDED BY THE ENGINEER FOR DISTRIBUTION. ONE PRINT WILL BE RETAINED; THE REMAINDER RETURNED. ONE OF THE PRINTS RETURNED SHALL BE MARKED-UP AND MAINTAINED AS A "RECORD DOCUMENT".
      g. DO NOT USE SHOP DRAWINGS WITHOUT AN APPROPRIATE FINAL STAMP INDICATING ACTION TAKEN IN CONNECTION WITH CONSTRUCTION.
      h. DO NOT ORDER ANY MATERIALS OR EQUIPMENT PRIOR TO RECEIVING FINAL APPROVED SHOP DRAWINGS.
      i. PROVIDE SUBMITTALS AS INDICATED IN SPECIFIC SPECIFICATION SECTIONS.
9. USE ADEQUATE NUMBERS OF SKILLED WORKMEN WHO ARE THOROUGHLY TRAINED AND EXPERIENCED IN THE NECESSARY CRAFTS AND WHO ARE COMPLETELY FAMILIAR WITH THE SPECIFIED REQUIREMENTS AND THE METHODS NEEDED FOR PROPER PERFORMANCE OF THE WORK.
10. THE CONTRACTOR SHALL COORDINATE ALL INTERRUPTIONS OF SERVICES AND LIMITATIONS OF ACCESS WITH THE OWNER NO LESS THAN 5 DAYS PRIOR TO THE INTERRUPTION.
11. OPERATION AND MAINTENANCE
   A. UPON COMPLETION OF ALL WORK AND TESTS, THE CONTRACTOR SHALL INSTRUCT THE OWNER OR THE OWNER'S REPRESENTATIVE IN THE OPERATION, ADJUSTMENT AND MAINTENANCE OF ALL EQUIPMENT FURNISHED. THE CONTRACTOR SHALL GIVE AT LEAST SEVEN (7) DAYS NOTICE TO THE OWNER AND THE ENGINEER IN ADVANCE OF THIS PERIOD.
   B. THE CONTRACTOR SHALL PREPARE THREE (3) COPIES OF A COMPLETE OPERATION AND MAINTENANCE MANUAL, BOUND IN BOOKLET FORM. ORGANIZE OPERATING AND MAINTENANCE DATA INTO SUITABLE SETS OF MANAGEABLE SIZE. BIND PROPERLY INDEXED DATA IN INDIVIDUAL HEAVY-DUTY 3-RING VINYL-COVERED BINDERS, WITH POCKET FOLDERS FOR FOLDED SHEET INFORMATION AND DESIGNATION PARTITIONS WITH IDENTIFICATION TABS. MARK APPROPRIATE IDENTIFICATION ON FRONT AND SPINE OF EACH BINDER.
   C. OPERATION AND MAINTENANCE MANUAL SHALL INCLUDE THE FOLLOWING:
      a. MANUFACTURER'S PRINTED OPERATING AND MAINTENANCE PROCEDURES.
      b. MAINTENANCE PROCEDURES FOR ROUTINE PREVENTATIVE MAINTENANCE AND TROUBLESHOOTING.
      c. COPIES OF WARRANTIES.
      d. APPROVED SHOP DRAWINGS AND PRODUCT DATA.
      e. BALANCE REPORTS.
      f. INCLUDE IN THE MANUAL, A TABULATED EQUIPMENT SCHEDULE FOR ALL EQUIPMENT. SCHEDULE SHALL INCLUDE PERTINENT DATA SUCH AS: MAKE, MODEL NUMBER, SERIAL NUMBER, VOLTAGE, NORMAL OPERATING CURRENT, BELT SIZE, FILTER QUANTITIES AND SIZES, BEARING NUMBER, ETC. SCHEDULE SHALL INCLUDE MAINTENANCE TO BE DONE AND FREQUENCY.
      g. MAINTENANCE AND INSTRUCTION MANUALS SHALL BE SUBMITTED TO THE OWNER AT THE SAME TIME AS THE SEVEN (7) DAY NOTICE IS GIVEN PRIOR TO THE INSTRUCTION PERIOD.
12. AS-BUILT DRAWINGS
   A. PREPARE AS-BUILT DRAWINGS TO A SCALE OF 1/4"=1'-0" OR LARGER; DETAILING THE ACTUAL INSTALLATION OF MAJOR ELEMENTS, COMPONENTS, AND SYSTEMS OF MECHANICAL EQUIPMENT AND MATERIALS. WHERE SHOP DRAWINGS ARE USED, RECORD A CROSS-REFERENCE AT THE CORRESPONDING LOCATION ON THE AS-BUILT DRAWINGS. GIVE PARTICULAR ATTENTION TO CONCEALED ELEMENTS THAT WOULD BE DIFFICULT TO MEASURE AND RECORD AT A LATER DATE.
   B. MARK NEW INFORMATION THAT IS IMPORTANT TO THE OWNER, BUT WAS NOT SHOWN ON CONTRACT DRAWINGS OR SHOP DRAWINGS.
   C. NOTE RELATED CHANGE ORDER NUMBERS WHERE APPLICABLE.
   D. ORGANIZE AS-BUILT DRAWINGS INTO MANAGEABLE SETS, BIND WITH DURABLE PAPER COVER SHEETS, AND PRINT SUITABLE TITLES, DATES AND OTHER IDENTIFICATION ON THE COVER OF EACH SET.
13. OBTAIN IN OWNER'S NAME WRITTEN EQUIPMENT AND MATERIAL WARRANTIES OFFERED IN MANUFACTURER'S PUBLISHED PRODUCT DATA WITHOUT EXCLUSION OR LIMITATION.
14. GUARANTEE WORK OF THESE CONTRACT DOCUMENTS IN WRITING FOR NOT LESS THAN ONE (1) YEAR FROM DATE OF FINAL NOTICE OF ACCEPTANCE. REPAIR OR REPLACE DEFECTIVE MATERIALS, EQUIPMENT, WORKMANSHIP AND INSTALLATION THAT DEVELOP WITHIN THIS PERIOD, PROMPT AND TO OWNER'S SATISFACTION AND CORRECT DAMAGE CAUSED IN MAKING NECESSARY REPAIRS AND REPLACEMENTS UNDER GUARANTEE WITHIN CONTRACT PRICE.
15. SUBMIT TO THE OWNER AN OFFICIAL CERTIFICATE OF INSURANCE FOR THEIR RECORDS.

MEANS AND METHODS ALL TRADES

1. INSTALL ALL EQUIPMENT AND MATERIALS IN ACCORDANCE WITH MANUFACTURER'S RECOMMENDATIONS
2. DO NOT BURN WASTE MATERIALS. DO NOT BURY DEBRIS OR EXCESS MATERIALS ON THE OWNER'S PROPERTY. DO NOT DISCHARGE VOLATILE, HARMFUL OR DANGEROUS MATERIALS INTO DRAINAGE SYSTEMS. REMOVE AND DISPOSE OF ALL WASTE MATERIALS, PACKAGING MATERIAL, SKIDS ETC. FROM THE SITE AND DISPOSE OF IN A LAWFUL MANNER IN ACCORDANCE WITH MUNICIPAL, STATE AND FEDERAL REGULATIONS.
3. MATERIALS AND EQUIPMENT SHALL BE UL LISTED WHERE STANDARD HAS BEEN ESTABLISHED.
4. CAREFULLY INSPECT ALL BUILDING ELEMENTS PRIOR TO CUTTING OR DRILLING INTO WALL, FLOORS OR CEILINGS. PATCH AND PAINT SURFACES DISTURBED BY WORK UNDER THIS CONTRACT AS REQUIRED TO RESTORE THEM TO THEIR ORIGINAL CONDITION.
5. SCAFFOLDING, RIGGING, HOISTING: THE CONTRACTOR SHALL FURNISH ALL SCAFFOLDING, RIGGING, HOISTING AND SERVICES NECESSARY FOR ERECTION AND DELIVERY INTO THE PREMISES ANY EQUIPMENT AND APPARATUS FURNISHED UNDER THIS DIVISION. REMOVE SAME FROM PREMISES WHEN NO LONGER REQUIRED.
6. EXCAVATION AND BACKFILLING: IT IS THE RESPONSIBILITY OF THE CONTRACTOR TO COORDINATE SIZES, DEPTHS, FILL AND BEDDING REQUIREMENTS AND ANY OTHER EXCAVATION WORK REQUIRED UNDER THESE SPECIFICATIONS
7. WATERPROOFING: WHERE ANY WORK PIERCES WATERPROOFING, INCLUDING WATERPROOF CONCRETE, ROOFS, EXTERIOR WALL AND FLOORS IN WET AREAS, THE METHOD OF INSTALLATION SHALL BE REVIEWED BY THE ENGINEER BEFORE WORK IS DONE. THE CONTRACTOR SHALL FURNISH ALL NECESSARY SLEEVES, CAULKING AND FLASHING REQUIRED TO MAKE OPENINGS ABSOLUTELY WATERTIGHT.
8. PROVIDE FIRESTOPPING AROUND ALL FIRE PROTECTION, PLUMBING, MECHANICAL AND ELECTRICAL PENETRATIONS THROUGH FIRE RATED PARTITIONS. PROVIDE ASBESTOS FREE FIRESTOPPING SYSTEM CAPABLE OF MAINTAINING AN EFFECTIVE BARRIER AGAINST FLAME AND GASES. SYSTEM SHALL BE UL LISTED AND COMPLY WITH ASTM E 814.
9. ACCESS DOORS SHALL BE PROVIDED IN CEILINGS, WALLS AND FLOORS AT ALL DAMPERS, VALVES, CONTROL DEVICES, AND OTHER APPARATUS AND EQUIPMENT REQUIRING PERIODIC SERVICE AND INSPECTION. COORDINATE TYPE AND LOCATION WITH ARCHITECTURAL PLANS.
10. SEISMIC RESTRAINTS SHALL BE INSTALLED AS REQUIRED PER BUILDING CODE AND FIRE SAFETY CODE. RESTRAINTS SHALL BE INSTALLED IN ACCORDANCE WITH NFPA 13 AND SMACNA STANDARDS. SUBMIT SHOP DRAWINGS INCLUDING SEISMIC CALCULATIONS WITH PROFESSIONAL ENGINEER'S SEAL FOR REVIEW BY ENGINEER.

PLUMBING

1. PIPING:
   A. DOMESTIC WATER PIPING SHALL BE COPPER TUBING TYPE L. SOLDER FILLER METALS SHALL BE 95-5 TIN-ANTIMONY SOLDER JOINTS.
   B. WASTE AND VENT PIPING SHALL BE PVC, TYPE DWV PIPE AND FITTINGS WITH SOLVENT CEMENTED JOINTS.
   C. WASTE AND VENT PIPING SHALL BE HUBLESS, SERVICE WEIGHT, CAST-IRON SOIL PIPE AND FITTINGS, WITH NEOPRENE GASKETS. BURIED PIPING SHALL BE HUB AND SPIGOT FITTINGS.
   D. LIQUID PROPANE PIPING SHALL BE SCHEDULE 40, CARBON STEEL PIPE, WITH THREADED JOINTS AND FITTINGS OR TYPE L COPPER TUBING.
2. INSULATION:
   A. INSULATION SHALL BE IN ACCORDANCE WITH LATEST EDITION OF THE IECC EXCEPT THAT PIPE INSULATION SHALL NOT BE LESS THAN 1" THICK. ALL INSULATION MATERIALS, ADHESIVES, COATINGS, AND OTHER ACCESSORIES SHALL HAVE FLAME SPREAD RATINGS OF 25 OR LESS, AND SMOKE DEVELOPED RATINGS OF 50 OR LESS AS TESTED BY ASTM E 84 (NFPA 255) METHOD. ALL INSULATION MATERIALS SHALL BE INSTALLED IN ACCORDANCE WITH THE MANUFACTURERS RECOMMENDATIONS AND IN ACCORDANCE WITH THE LATEST EDITION OF SMACNA AND ASHRAE STANDARDS.
   B. PIPE INSULATION SHALL BE FIBERGLASS WITH VAPOR BARRIER JACKET. PROVIDE INSULATION FOR THE FOLLOWING PIPING SYSTEMS:
      a. DOMESTIC COLD WATER PIPING
      b. DOMESTIC HOT WATER PIPING
   C. ALL EXPOSED DOMESTIC WATER PIPE SHALL BE WRAPPED WITH A PVC VAPOR BARRIER JACKET AS MANUFACTURED BY ZESTON OR APPROVED EQUAL. PVC JACKETING SHALL BE FINISHED TO BE WATER TIGHT.
3. PIPING INSTALLATION:
   A. INSTALL PIPING IN ACCORDANCE WITH ALL APPLICABLE CODES AND GOOD PRACTICES.
   B. INSTALL UNIONS OR FLANGES IN PIPES ADJACENT TO EACH VALVE, CONTROL DEVICE AND AT FINAL CONNECTIONS EACH PIECE OF EQUIPMENT.
   C. INSTALL DIELECTRIC UNIONS TO JOIN DISSIMILAR METALS.
   D. INSTALL AND ANCHOR PIPING TO ENSURE PROPER EXPANSION AND CONTRACTION.
   E. ANCHOR PIPING TO ENSURE PROPER DIRECTION OF EXPANSION AND CONTRACTION.
   F. SUPPORT PIPING TO PREVENT VIBRATION OR SAGGING. PROVIDE HANGER SPACING ACCORDING TO DISTANCES LISTED IN APPLICABLE CODES AND REGULATIONS.
4. PLUMBING IDENTIFICATION
   A. PLUMBING IDENTIFICATION WORK SHALL COMPLY WITH ANSI A13.1. NAMES, ABBREVIATIONS AND OTHER DESIGNATIONS USED IN MECHANICAL IDENTIFICATION WORK, SHALL CORRESPOND WITH DESIGNATIONS SHOWN. SPECIFIED OR SCHEDULED.
   B. VALVE TAGS SHALL BE 1-1/2' DIAMETER, 19-GAGE POLISHED BRASS WITH STAMP-ENGRAVED LETTERING. ATTACH VALVES IN ACCORDANCE WITH MANUFACTURER'S RECOMMENDATIONS.
   C. PROVIDE VALVE TAG ON EVERY VALVE, EXCLUDING DRAIN VALVES.
   D. PIPE IDENTIFICATION, PLASTIC PIPE MARKERS, FACTORY FABRICATED, FLEXIBLE, SEMI-RIGID PLASTIC. PERFORMED TO FIT AROUND PIPE OR PIPE COVERING, MINIMUM INFORMATION INDICATING FLOW DIRECTION ARROW AND IDENTIFICATION OF FLUID BEING CONVEYED.
5. TESTING AND. ADJUSTING
   A. ALL WATER PIPING SHALL BE TESTED IN ACCORDANCE WITH THE INTERNATIONAL PLUMBING CODE. THE SYSTEM SHALL BE PROVED TIGHT UNDER WATER PRESSURE OF 100 PSIG. THE PRESSURE SHALL BE APPLIED GRADUALLY AND THEN HELD FOR A MINIMUM OF TWO HOURS.
   B. ALL WASTE PIPING SHALL BE TESTED IN ACCORDANCE WITH THE INTERNATIONAL PLUMBING CODE. THE SYSTEM SHALL BE FILLED WITH WATER TO A HEAD OF NOT LESS THAN 10 FEET. THE WATER LEVEL AT THE TOP OF THE TEST HEAD OF WATER SHALL NOT DROP FOR AT LEAST 15 MINUTES.
   C. THE CONTRACTOR SHALL PROVIDE ALL NECESSARY EQUIPMENT FOR ALL TESTING.

CAPITAL STUDIO architects LLC
1379 MAIN STREET EAST HARTFORD CT. 06108
860.289.3262 fax 860.289.3163

THE STATE OF CONNECTICUT DEPARTMENT OF HOUSING (DOH) COMMUNITY DEVELOPMENT BLOCK GRANT - DISASTER RECOVERY (CDBG-DR) DOH OCCUPIED REHABILITATION and REBUILDING PROGRAM (OORR)

CARLSON RESIDENCE APPLICATION No. 1939 39 ATTAWAN AVENUE NIANTIC, CT 06357

CES Consulting Engineering Services, Inc.
511 Middle Street
Middletown, CT 06457
Tel. (860) 632-1652
Fax. (860) 632-1768
CES #2014064.00

date	description	no.

revisions

P-5.0

date	JUNE 19, 2015
drawn	ANK
scale	AS SHOWN
checked	DTB
project no.	2014064.00
application no.	1939

Copyright © 2014 Capital Studio Architects, LLC

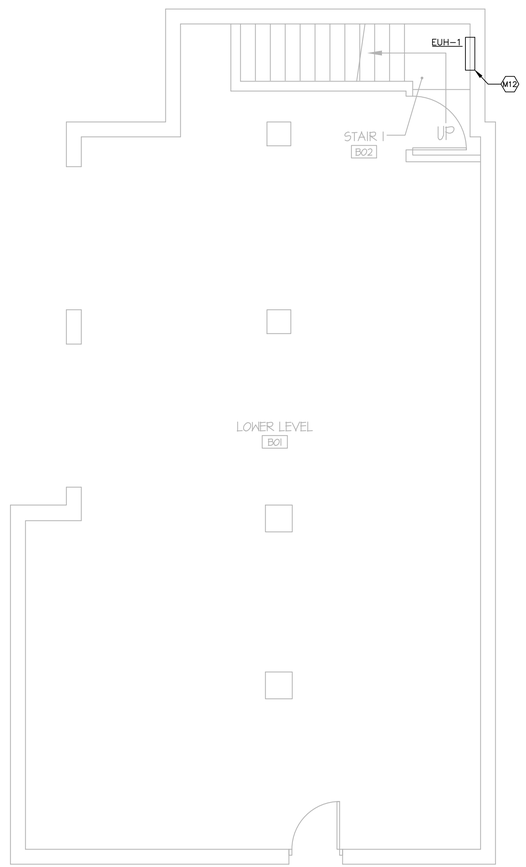

1 A-1.0 GROUND LEVEL PLAN

SCALE: 1/4"= 1'-0"

NORTH

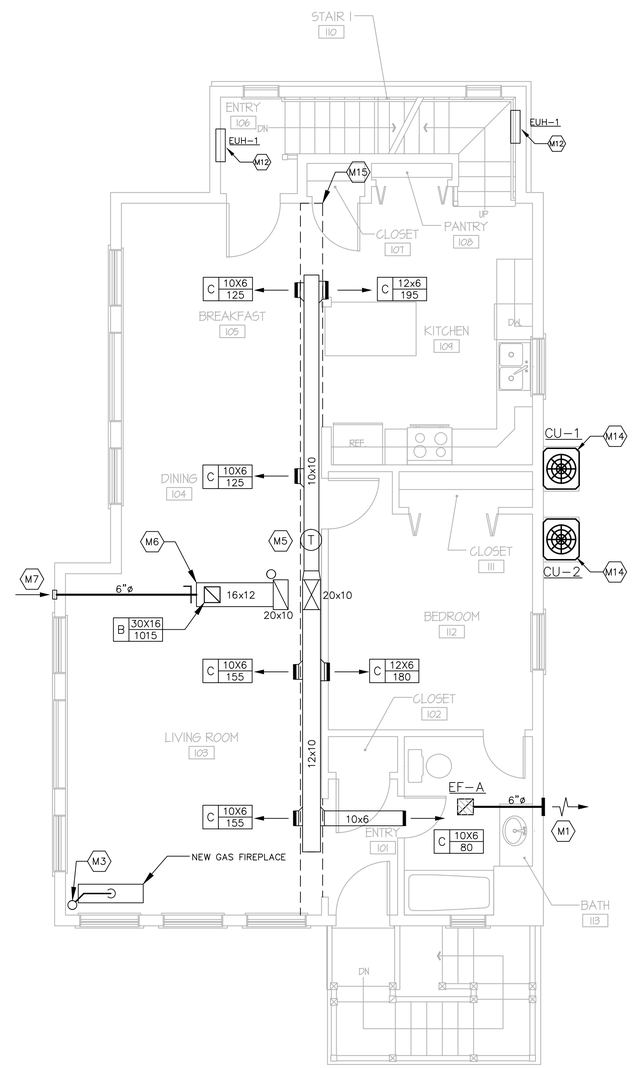

2 A-1.0 FIRST FLOOR

SCALE: 1/4"= 1'-0"

NORTH

GENERAL NOTES ALL TRADES

1. ALL MECHANICAL ITEMS SHALL BE INSTALLED ABOVE THE FLOOD PLANE AS INDICATED ON THE ARCHITECTURAL PLANS.
2. WORK SHALL BE COORDINATED WITH ARCHITECTURAL PLANS INCLUDING ACCESS PANELS FOR VALVES AND EQUIPMENT, DIFFUSER LOCATIONS, THERMOSTAT AND SENSOR LOCATIONS, ETC.
3. CONTRACTOR SHALL FIELD VERIFY ACTUAL CONDITIONS PRIOR TO PROVIDING ALL EQUIPMENT AND PIPING.

MECHANICAL KEY NOTES

- M1 PROVIDE EXHAUST FAN WALL CAP. WALL CAP SHALL BE METAL WITH BACKDRAFT DAMPER MODEL WC-6 AS MANUFACTURED BY BUCKLEY ASSOCIATES.
- M2 PROVIDE 4" DRYER EXHAUST DUCT. DUCT SHALL BE ALUMINUM RIDGED FLEXIBLE DUCTWORK. TERMINATE THROUGH WALL WITH DRYER EXHAUST CAP.
- M3 PROVIDE NEW DIRECT VENT CHIMNEY WITH APPLIANCE ADAPTOR FOR LPG FIREPLACE. DIRECT VENT CHIMNEY SHALL TERMINATE VERTICALLY WITH MANUFACTURER SUPPLIED TERMINATION CAP. VENT SHALL BE 5" INNER LINER AND 8" OUTER LINER WITH 430 STAINLESS STEEL INNER FLUE AND GALVANIZED STEEL OUTER CASTING. DIRECT VENT CHIMNEY SHALL BE MODEL SURE-SEAL DV AS MANUFACTURED BY METAL-FAB OR APPROVED EQUAL. APPLIANCE ADAPTOR SHALL BE MODEL SURE-SEAL 5DDA AS MANUFACTURED BY METAL-FAB OR ACCEPTED VENT MANUFACTURER.
- M4 PROVIDE 3" PVC INTAKE AND VENT. TERMINATE THROUGH WALL MANUFACTURERS CONCENTRIC VENT.
- M5 PROVIDE 7 DAY FULLY PROGRAMMABLE THERMOSTAT.
- M6 PROVIDE 2" PVC INTAKE AND VENT. TERMINATE THROUGH ROOF MANUFACTURER'S CONCENTRIC VENT.
- M7 PROVIDE HOODED WALL CAP WITH BUILT IN BIRD SCREEN FOR VENTILATION AIR INTAKE.
- M8 PROVIDE 2" PVC INTAKE AND VENT. TERMINATE THROUGH WALL MANUFACTURERS CONCENTRIC VENT.
- M9 PROVIDE NEW FURNACE. REFER TO SCHEDULES FOR MORE DETAILS. CONNECT NEW PIPING AND DUCTS AS INDICATED ON FLOOR PLANS AND DETAIL 1/M5.0.
- M10 KNEE WALLS REQUIRE ACCESS PANELS FOR DUCTWORK.
- M11 PROVIDE 5' PLENUM ON BACK FULL SIZE OF UNIT RETURN.
- M12 PROVIDE SMALL FAN-FORCED WALL HEATER. WALL HEATER SHALL BE 120V, 1500/750 WATT WITH A CAPACITY OF 5120/2560 BTU/HR. WALL HEATER SHALL BE MODEL NUMBER FFH1612 AS MANUFACTURED BY FAHRENHEAT OR APPROVED EQUAL.
- M13 PROVIDE IN-O-VATE TECHNOLOGIES, INC MODEL #425 22 GAUGE ALUMINIZED STEEL DRYERBOX.
- M14 CONDENSING UNIT SHALL BE ORIENTED SO THAT ELECTRICAL SERVICE PANEL SIDE HAS 30" CLEARANCE. TOP DISCHARGE AREA SHOULD BE UNRESTRICETED FOR AT LEAST 5 FT ABOVE UNIT. UNIT SHOULD BE PLACED SO ROOF RUN-OFF WATER DOES NOT POUR DIRECTLY ON UNIT, AND SHOULD BE AT LEAST 12" FROM WALL AND ALL SURROUNDING SHRUBBERY ON TWO SIDES. OTHER TWO SIDES UNRESTRICTED.
- M15 ARCHITECTURAL SOFFIT. REFER TO ARCHITECTURAL PLANS FOR EXACT SIZE AND LOCATION. DUCTWORK PLACED WITHIN SOFFIT.

CAPITAL STUDIO architects LLC
1379 MAIN STREET EAST HARTFORD CT. 06108
860.289.3262 fax 860.289.3163

THE STATE OF CONNECTICUT DEPARTMENT OF HOUSING (DOH) COMMUNITY DEVELOPMENT BLOCK GRANT - DISASTER RECOVERY (CDBG-DR) DOH OCCUPIED REHABILITATION and REBUILDING PROGRAM (OORR)

CARLSON RESIDENCE
APPLICATION No. 1939
39 ATTAWAN AVENUE
NIANTIC, CT 06357

CES Consulting Engineering Services, Inc.
511 Middle Street
Middletown, CT 06457
Tel. (860) 632-1652
Fax. (860) 632-1768
CES #2014064.00

date	description	no.

revisions

M-1.0

date	JUNE 19, 2015
drawn	ANK
scale	AS SHOWN
checked	DTB
project no.	2014064.00
application no.	1939

Copyright © 2014 Capital Studio Architects, LLC

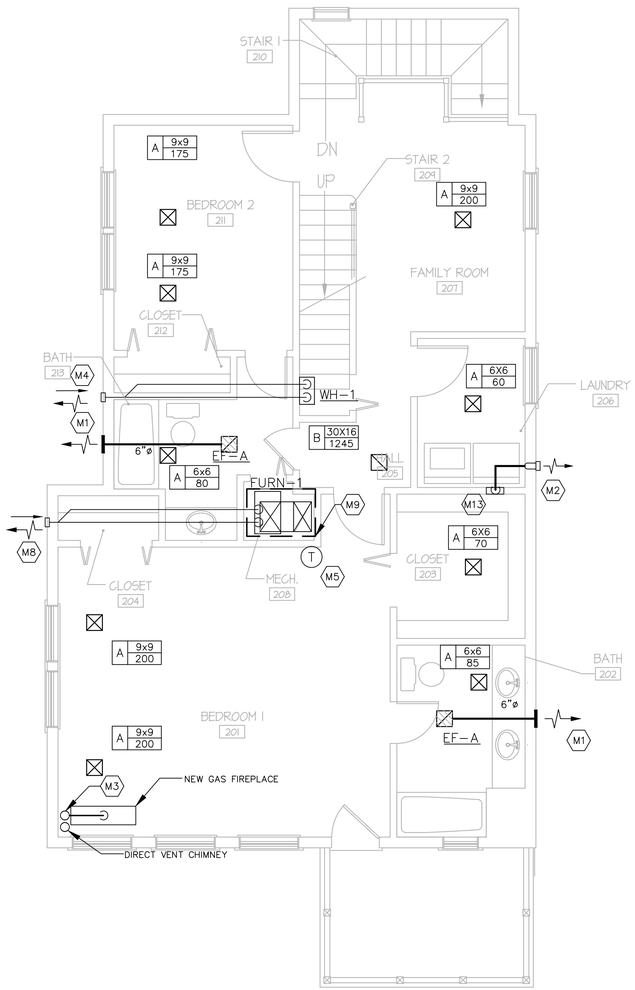

1 A-1.0 SECOND FLOOR

SCALE: 1/4"= 1'-0"

NORTH

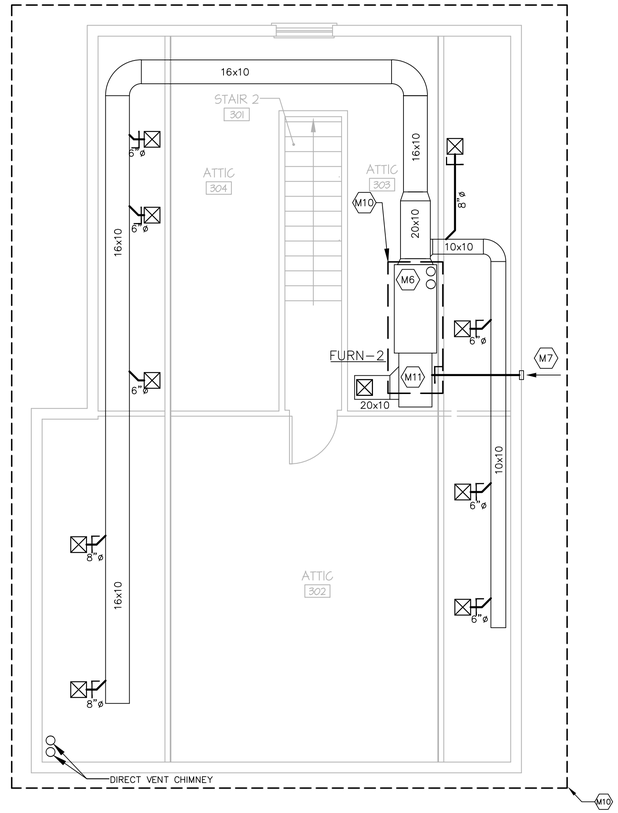

2 A-1.0 ATTIC PLAN

SCALE: 1/4"= 1'-0"

NORTH

GENERAL NOTES ALL TRADES

1. ALL MECHANICAL ITEMS SHALL BE INSTALLED ABOVE THE FLOOD PLANE AS INDICATED ON THE ARCHITECTURAL PLANS.
2. WORK SHALL BE COORDINATED WITH ARCHITECTURAL PLANS INCLUDING ACCESS PANELS FOR VALVES AND EQUIPMENT, DIFFUSER LOCATIONS, THERMOSTAT AND SENSOR LOCATIONS, ETC.
3. CONTRACTOR SHALL FIELD VERIFY ACTUAL CONDITIONS PRIOR TO PROVIDING ALL EQUIPMENT AND PIPING.

MECHANICAL KEY NOTES

M1 PROVIDE EXHAUST FAN WALL CAP. WALL CAP SHALL BE METAL WITH BACKDRAFT DAMPER MODEL WC-6 AS MANUFACTURED BY BUCKLEY ASSOCIATES.

M2 PROVIDE 4" DRYER EXHAUST DUCT. DUCT SHALL BE ALUMINUM RIDGED FLEXIBLE DUCTWORK. TERMINATE THROUGH WALL WITH DRYER EXHAUST CAP.

M3 PROVIDE NEW DIRECT VENT CHIMNEY WITH APPLIANCE ADAPTOR FOR LPG FIREPLACE. DIRECT VENT CHIMNEY SHALL TERMINATE VERTICALLY WITH MANUFACTURER SUPPLIED TERMINATION CAP. VENT SHALL BE 5" INNER LINER AND 8" OUTER LINER WITH 430 STAINLESS STEEL INNER FLUE AND GALVANIZED STEEL OUTER CASTING. DIRECT VENT CHIMNEY SHALL BE MODEL SURE-SEAL DV AS MANUFACTURED BY METAL-FAB OR APPROVED EQUAL. APPLIANCE ADAPTOR SHALL BE MODEL SURE-SEAL 5DDA AS MANUFACTURED BY METAL-FAB OR ACCEPTED VENT MANUFACTURER.

M4 PROVIDE 3" PVC INTAKE AND VENT. TERMINATE THROUGH WALL MANUFACTURERS CONCENTRIC VENT.

M5 PROVIDE 7 DAY FULLY PROGRAMMABLE THERMOSTAT.

M6 PROVIDE 2" PVC INTAKE AND VENT. TERMINATE THROUGH ROOF MANUFACTURER'S CONCENTRIC VENT.

M7 PROVIDE HOODED WALL CAP WITH BUILT IN BIRD SCREEN FOR VENTILATION AIR INTAKE.

M8 PROVIDE 2" PVC INTAKE AND VENT. TERMINATE THROUGH WALL MANUFACTURERS CONCENTRIC VENT.

M9 PROVIDE NEW FURNACE. REFER TO SCHEDULES FOR MORE DETAILS. CONNECT NEW PIPING AND DUCTS AS INDICATED ON FLOOR PLANS AND DETAIL 1/M5.0.

M10 KNEE WALLS REQUIRE ACCESS PANELS FOR DUCTWORK.

M11 PROVIDE 5' PLENUM ON BACK FULL SIZE OF UNIT RETURN.

M12 PROVIDE SMALL FAN-FORCED WALL HEATER. WALL HEATER SHALL BE 120V, 1500/750 WATT WITH A CAPACITY OF 5120/2560 BTU/HR. WALL HEATER SHALL BE MODEL NUMBER FFH1612 AS MANUFACTURED BY FAHRENHEAT OR APPROVED EQUAL.

M13 PROVIDE IN-O-VATE TECHNOLOGIES, INC MODEL #425 22 GAUGE ALUMINIZED STEEL DRYERBOX.

M14 CONDENSING UNIT SHALL BE ORIENTED SO THAT ELECTRICAL SERVICE PANEL SIDE HAS 30" CLEARANCE. TOP DISCHARGE AREA SHOULD BE UNRESTRICETED FOR AT LEAST 5 FT ABOVE UNIT. UNIT SHOULD BE PLACED SO ROOF RUN-OFF WATER DOES NOT POUR DIRECTLY ON UNIT, AND SHOULD BE AT LEAST 12" FROM WALL AND ALL SURROUNDING SHRUBBERY ON TWO SIDES. OTHER TWO SIDES UNRESTRICTED.

M15 ARCHITECTURAL SOFFIT. REFER TO ARCHITECTURAL PLANS FOR EXACT SIZE AND LOCATION. DUCTWORK PLACED WITHIN SOFFIT.

CAPITAL STUDIO architects LLC
1379 MAIN STREET EAST HARTFORD CT. 06108
860.289.3262 fax 860.289.3163

THE STATE OF CONNECTICUT DEPARTMENT OF HOUSING (DOH) COMMUNITY DEVELOPMENT BLOCK GRANT - DISASTER RECOVERY (CDBG-DR) DOH OCCUPIED REHABILITATION and REBUILDING PROGRAM (OORR)

CARLSON RESIDENCE
APPLICATION No. 1939
39 ATTAWAN AVENUE
NIANTIC, CT 06357

CES Consulting Engineering Services, Inc.
511 Middle Street
Middletown, CT 06457
Tel. (860) 632-1682
Fax. (860) 632-1768
CES #2014064.00

date	description	no.

revisions

M-1.1

date	JUNE 19, 2015
drawn	ANK
scale	AS SHOWN
checked	DTB
project no.	2014064.00
application no.	1939

Copyright © 2014 Capital Studio Architects, LLC

MECHANICAL LEGEND

SYMBOL	DESCRIPTION
	FLEXIBLE DUCTWORK
	NEW DUCTWORK (DOUBLE LINE)
	NEW DUCTWORK (SINGLE LINE)
	RETURN DUCT DROP (DOUBLE LINE)
	RETURN DUCT DROP (SINGLE LINE)
	RETURN DUCT RISE (DOUBLE LINE)
	RETURN DUCT RISE (SINGLE LINE)
	SUPPLY DUCT DROP (DOUBLE LINE)
	SUPPLY DUCT DROP (SINGLE LINE)
	SUPPLY DUCT RISE (DOUBLE LINE)
	SUPPLY DUCT RISE (SINGLE LINE)
	VOLUME DAMPER
	RETURN/EXHAUST/OUTSIDE AIR ARROW
	SUPPLY ARROW
	CONNECTION TO EXISTING
T	THERMOSTAT
ETR	EXISTING TO REMAIN

MECHANICAL ABBREVIATIONS

ABBREVIATION	DESCRIPTION
BTU	BRITISH THERMAL UNIT
CAP	CAPACITY
ET-#	EXPANSION TANK
EWT	ENTERING WATER TEMPERATURE
HD	HEAD
HP	HORSE POWER
LWT	LEAVING WATER TEMPERATURE
MIN	MINIMUM
N.T.S.	NOT TO SCALE
N/A	NOT APPLICABLE
NC	NOISE CRITERIA
NIC	NOT IN CONTRACT
NO.	NUMBER
NOM	NOMINAL
OA	OUTSIDE AIR
P-#	PUMP
SPEC	SPECIFICATION
TEMP	TEMPERATURE
TYP	TYPICAL

GAS FIRED FURNACE SCHEDULE

SYMBOL	MANUFACTURER/ MODEL NUMBER	TYPE	LOCATION	FUEL	FLUE SIZE	IGNITION TYPE	INPUT MBH	OUTPUT MBH	AFUE (%)	CFM	MIN. CFM O.A	ESP IN. WG	EAT DEG F	LAT DEG F *	FILTER	ELEC. DATA AMP-VOLT-PH	OPERATING WEIGHT, LBS	REMARKS
FURN-1	TRANE TUH2B080A9V3VA	U	MECH ROOM	PROPANE	2"	HOT SURFACE IGNITOR	80.0	77.6	97	1,015	60	0.5	65	102	ELECTRONIC HIGH EFFICIENCY	11.1-115-1	156	ALL
FURN-2	TRANE TUH2B080A9V3VA	H	ATTIC	PROPANE	2"	HOT SURFACE IGNITOR	80.0	77.6	97	1,245	60	0.5	65	102	ELECTRONIC HIGH EFFICIENCY	11.4-115-1	156	ALL

TYPES: U=UP-FLOW H=HORIZONTAL

NOTE: PROVIDE WITH RESIDENTIAL INTEGRATED ZONE SYSTEM BY TRANE.

REMARKS:

1. VARIABLE SPEED ECM MOTOR
2. PROVIDE WITH COMBINATION MOTOR STARTER/FUSED DISCONNECT SWITCH.
3. MAXIMUM COIL FACE VELOCITY SHALL BE 500 FPM
4. SEE DX COOLING COIL SCHEDULE FOR ADDITIONAL INFORMATION.
5. WATER LEVEL DETECTION SENSOR IN PRIMARY DRAIN PAN.

* FIRST STAGE HEATING

AIR COOLED CONDENSING UNIT SCHEDULE

SYMBOL	MANUFACTURER/ MODEL NUMBER	SYSTEM SERVED	REFRIGERANT	SEER	TOTAL CAP (MBH)	SENS CAP (MBH)	SUCTION TEMP (°F)	AMBIENT AIR TEMP (°F)	ELECTRICAL DATA			WEIGHT (LBS)	REMARKS
									MCA	VOLTS	PHASE		
CU-1	TRANE 4TTR6030	CC-1	R-410A	16	28.8	21.0	-	95	12	230	1	234	ALL
CU-2	TRANE 4TTR6030	CC-2	R-410A	16	28.8	21.0	-	95	12	230	1	234	ALL

REMARKS:

1. PROVIDE WITH UNIT MOUNTED FUSED DISCONNECT SWITCH
2. PROVIDE WITH LIQUID AND SUCTION LINE, FILTER DRYERS, EXPANSION VALVE, SIGHT GLASS LOW-AMBIENT TEMPERATURE CONTROL, AND ALL OTHER REFRIGERANT SPECIALTIES.

DX COOLING COIL SCHEDULE

SYMBOL	MANUFACTURER/ MODEL NUMBER	TYPE	SYSTEM SERVED	AIR FLOW CFM	TOTAL CAP. MBH	SENS. CAP. MBH	EAT DEG F DB/WT	LAT DEG F DB/WT	AIR P.D. IN. WG	REMARKS
CC-1	TRANE 4TXC	DX	FURN-1	1,015	28.8	21.0	80/67	60/57	0.25	ALL
CC-2	TRANE 4TXC	DX	FURN-2	1,245	28.8	21.0	80/67	60/57	0.25	ALL

DX=DIRECT EXPANSION

REMARKS:

1. CONTRACTOR TO VERIFY ACTUAL LIQUID AND SUCTION LINE SIZES WITH MANUFACTURER, BASED ON ACTUAL FIELD CONDITIONS, BEFORE INSTALLATION OF PIPING.
2. PROVIDE WITH THERMAL EXPANSION VALVE KIT.

FAN SCHEDULE

GENERAL					PHYS.	PERFORMANCE					ELECTRICAL			REMARKS			
SYMBOL	MANUFACTURER	MODEL	LOCATION	SERVICE	WEIGHT (LBS)	CFM	SP (IN WG)	RPM	SONES	MOTOR (HP)	AMPS-WATTS	VOLTS	PHASE	TYPE	RATINGS	FEATURES	INSTALL
EF-A	PANASONIC	FV-08VKME3	BATHROOM	SHOWER/BATHROOM	-	86	0.25	1200	0.7	-	0.11-13.3	120	1	1	1	1	1

REMARKS-TYPE

1. CEILING MOUNTED COMBINATION EXHAUST FAN W/INTEGRAL LED LIGHT.

REMARKS-RATINGS

1. AIR PERFORMANCE CERTIFIED IN ACCORDANCE TO AMCA

REMARKS-FEATURES

1. CEILING MOUNTED EXHAUST FAN WITH INTEGRAL LED LIGHT SMART ACTION MOTION SENSOR . UNIT SHALL HAVE DC BRUSHLESS MOTOR. LIGHT SHALL BE 12 WATT AND NOT LESS THAN 912 LUMENS.

REMARKS-INSTALL

1. PROVIDE BACKDRAFT DAMPER ON FAN OUTLET.

DIFFUSER AND REGISTER SCHEDULE

SYMBOL	MANUFACTURER/ MODEL	DUTY	TYPE	BORDER TYPE	CONSTRUCTION			REMARKS
					OBD	FRAME	BLADES	
A	CEILING DIFFUSER KRUEGER SH	SUPPLY	L.F.	FLUSH	YES	STEEL TO PAINT	STEEL	1
B	ARCHITECTURAL GRILLE KRUEGER S80	RETURN	L.F.	FLUSH	YES	STEEL TO PAINT	STEEL	2,3
C	SUPPLY GRILLE KRUEGER 880 SERIES	SUPPLY	D.D.	FLUSH	YES	STEEL TO PAINT	STEEL	4

TYPES:

D.D. - DIRECTIONAL DIFFUSER
L.F. - LOUVERED FACE

INDICATES UNIT TYPE — A 12x12 / 350 — INDICATES NECK SIZE — INDICATES UNIT CFM CAPACITY

REMARKS:

1. SQUARE TO ROUND TRANSITION.
2. RETURN GRILLE PLENUM.
3. 0° DEFLECTION 3/4" SPACING
4. 3/4" SPACING

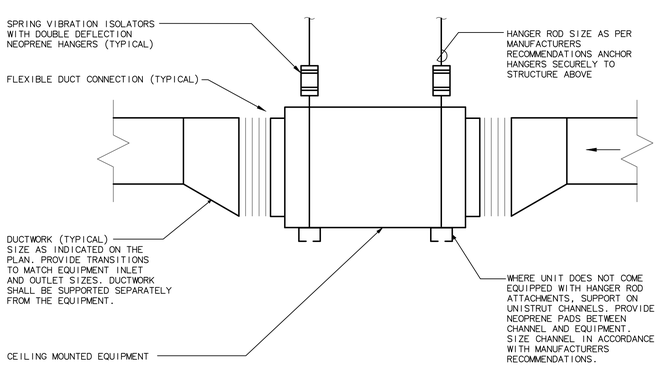

(DC IS SILENCER REQUIRED)

3 SUSPENDED IN-LINE FAN
N.T.S.

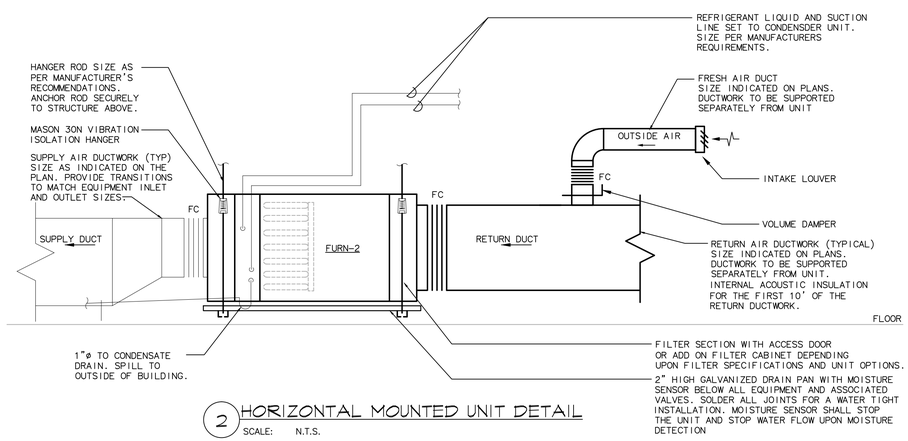

2 HORIZONTAL MOUNTED UNIT DETAIL
SCALE: N.T.S.

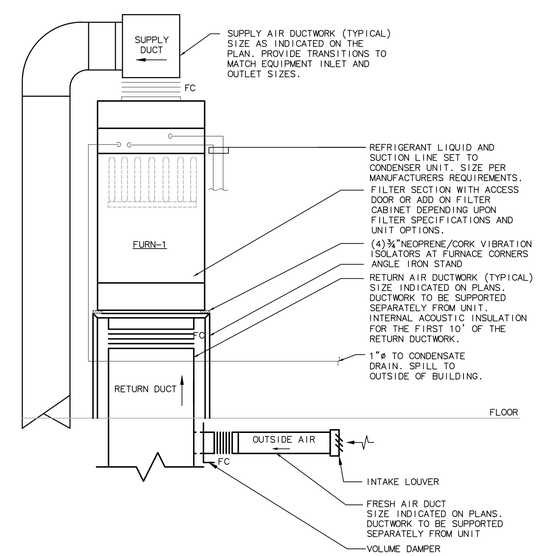

1 VERTICAL MOUNTED DOWN FLOW UNIT DETAIL
SCALE: N.T.S.

CAPITAL STUDIO architects LLC
1379 MAIN STREET 860.289.3262
EAST HARTFORD CT. 06108 fax 860.289.3163

THE STATE OF CONNECTICUT DEPARTMENT OF HOUSING (DOH) COMMUNITY DEVELOPMENT BLOCK GRANT - DISASTER RECOVERY (CDBG-DR) DOH OCCUPIED REHABILITATION and REBUILDING PROGRAM (OORR)

CARLSON RESIDENCE
APPLICATION No. 1939
39 ATTAWAN AVENUE
NIANTIC, CT 06357

CES Consulting Engineering Services, Inc.
1511 Middle Street
Middletown, CT 06457
Tel. (860) 632-1682
Fax. (860) 632-1768
CES #2014064.00

date	description	no.

revisions

M-5.0

date	JUNE 19, 2015
drawn	ANK
scale	AS SHOWN
checked	DTB
project no.	2014064.00
application no.	1939

Copyright © 2014 Capital Studio Architects, LLC

GENERAL PROCEDURES ALL TRADES

1. THESE SPECIFICATIONS ARE APPLICABLE TO ALL MECHANICAL DRAWINGS UNLESS NOTED OTHERWISE.

2. DESCRIPTION

   A. THIS PROJECT COMPRISES ALTERATIONS AND RENOVATIONS TO THE EXISTING BUILDING. THE EXISTING BUILDING IS CURRENTLY OCCUPIED AND THE PROJECT WILL PROCEED IN A MANNER WHICH WILL MINIMIZE ANY INCONVENIENCE TO THE BUILDING OCCUPANTS.

   B. SCOPE OF WORK CONSISTS OF INSTALLATION OF MATERIALS TO BE FURNISHED UNDER THE CONTRACT DOCUMENTS AND WITHOUT LIMITING GENERALITY THEREOF CONSISTS OF FURNISHING LABOR, MATERIALS, EQUIPMENT, HOISTING, PLANT, TRANSPORTATION, RIGGING, STAGING, APPURTENANCES, AND SERVICES NECESSARY AND/OR INCIDENTAL TO PROPERLY COMPLETE ALL WORK AS SHOWN ON THE DRAWINGS AND AS DESCRIBED HEREIN.

3. DEFINITIONS: THE FOLLOWING DEFINITIONS APPLY TO THIS CONTRACT

   A. FURNISH: THE TERM "FURNISH" MEANS TO "SUPPLY AND DELIVER TO THE PROJECT SITE, READY FOR UNLOADING, UNPACKING, ASSEMBLY, INSTALLATION, AND SIMILAR OPERATIONS."

   B. INSTALL: THE TERM "INSTALL" IS USED TO DESCRIBE OPERATIONS AT PROJECT SITE INCLUDING THE ACTUAL "UNLOADING, UNPACKING, ASSEMBLY, ERECTION, PLACING, ANCHORING, APPLYING, WORKING TO DIMENSION, FINISHING, CURING, PROTECTING, CLEANING, AND SIMILAR OPERATIONS."

   C. PROVIDE: THE TERM "PROVIDE" MEANS "TO FURNISH AND INSTALL, COMPLETE AND READY FOR THE INTENDED USE."

   D. REMOVE: THE TERM REMOVE MEANS TO DISCONNECTFROM ITS PRESENT POSITION, REMOVE FROM THE PREMISES AND TO DISPOSE OF IN A LEGAL MANNER.'

   E. SUBSTITUTIONS: 'SUBSTITUTIONS' ARE REQUESTS FOR CHANGES IN PRODUCTS, MATERIALS AND METHODS OF CONSTRUCTION AS PROPOSED BY THE CONTRACTOR AFTER AWARD OF THE CONTRACT.

4. DRAWINGS

   A. PROVIDE ALL MATERIALS, EQUIPMENT AND LABOR NECESSARY TO COMPLETE THE WORK OUTLINED ON THESE CONTRACT DOCUMENTS. THE CONTRACTOR IS TO NOTE THAT THESE DOCUMENTS ARE DIAGRAMMATIC ONLY AND THAT FINAL PLACEMENT OF EQUIPMENT OR DEVICES IN THE FIELD MAY NOT DIRECTLY CORRESPOND TO THAT WHICH IS SHOWN ON THE DRAWINGS. IF A CONFLICT IN POSITIONING OCCURS THE CONTRACTOR IS TO NOTIFY THE ENGINEER IMMEDIATELY TO ASCERTAIN WHAT THE INTENT WAS BY THE DESIGN PROFESSIONAL.

5. SURVEY AND MEASUREMENTS:

   A. PRIOR TO SUBMITTING BID, VISIT SITE AND IDENTIFY EXISTING CONDITIONS AND DIFFICULTIES THAT WILL AFFECT WORK TO BE PERFORMED. NO COMPENSATION WILL BE GRANTED FOR ADDITIONAL WORK CAUSED BY UNFAMILARITY WITH SITE CONDITIONS THAT ARE VISIBLE OR READILY IDENTIFIED BY EXPERIENCED OBSERVERS. INCLUDE IN THE BID ALL DEMOLITION WORK REQUIRED.

   B. DO NOT SCALE DRAWINGS. SCALE INDICATED ON DRAWINGS IS FOR ESTABLISHING REFERENCE POINTS ONLY. ACTUAL FIELD CONDITIONS SHALL GOVERN ALL DIMENSIONS.

   C. PRIOR TO ORDERING ANY MATERIALS AND EQUIPMENT, THOROUGHLY REVIEW THE SITE CONDITIONS TO DETERMINE IF ADEQUATE CLEARANCES AND ACCESS IS ALLOWED TO INSTALL THE COMPONENTS. ORDER EQUIPMENT BROKEN DOWN AS NECESSARY TO ALLOW FOR PROPER RIGGING THROUGH THE PROJECT AREA. PROVIDE ALL NECESSARY ALTERATIONS TO THE STRUCTURE OF THE BUILDING AS NECESSARY TO RIG THE EQUIPMENT IN PLACE.

   D. ARRANGE INSTALLATION TO PROVIDE ACCESS TO EQUIPMENT FOR EASY MAINTENANCE AND REPAIR.

6. CODES AND STANDARDS: ALL WORK SHALL BE COMPLETED IN ACCORDANCE WITH THE LATEST STATE OF CONNECTICUT ACCEPTED VERSION OF THE FOLLOWING

   A. INTERNATIONAL RESIDENTIAL CODE

   B. INTERNATIONAL BUILDING CODE

   C. INTERNATIONAL PLUMBING CODE

   D. INTERNATIONAL MECHANICAL CODE

   E. NATIONAL ELECTRIC CODE (NFPA 70)

   F. THE LIFE SAFETY CODE (NFPA 101)

7. PERMITS AND FEES: THE CONTRACTOR SHALL GIVE ALL NECESSARY NOTICES, OBTAIN ALL PERMITS; AND PAY ALL GOVERNMENT AND STATE SALES TAXES AND FEES WHERE APPLICABLE, AND OTHER COSTS, INCLUDING UTILITY CONNECTIONS OR EXTENSIONS IN CONNECTION WITH THE WORK. FILE ALL NECESSARY DRAWINGS, PREPARE ALL DOCUMENTS AND OBTAIN ALL NECESSARY APPROVALS OF ALL GOVERNMENTAL AND STATE DEPARTMENTS HAVING JURISDICTION, OBTAIN ALL REQUIRED CERTIFICATES OF INSPECTION FOR HIS WORK, AND DELIVER A COPY TO THE OWNER AND ENGINEER BEFORE REQUEST FOR ACCEPTANCE AND FINAL PAYMENT FOR THE WORK.

8. SHOP DRAWINGS:

   A. SUBMIT NEWLY PREPARED INFORMATION, DRAWN TO ACCURATE SCALE OF 1/4"=1'0". HIGHLIGHT, ENCIRCLE, OR OTHERWISE INDICATE DEVIATIONS FROM THE CONTRACT DOCUMENTS. DO NOT REPRODUCE CONTRACT DOCUMENTS OR COPY STANDARD INFORMATION AS THE BASIS OF SHOP DRAWINGS. STANDARD INFORMATION PREPARED WITHOUT SPECIFIC REFERENCE TO THE PROJECT IS NOT CONSIDERED SHOP DRAWINGS.

   B. SHOP DRAWINGS INCLUDE EQUIPMENT SUBMITTALS, FABRICATION AND INSTALLATION DRAWINGS, SETTING DIAGRAMS, SCHEDULES, PATTERNS, TEMPLATES AND SIMILAR DRAWINGS. INCLUDE THE FOLLOWING INFORMATION:

      a. DIMENSIONS.

      b. IDENTIFICATION OF PRODUCTS AND MATERIALS INCLUDED.

      c. COMPLIANCE WITH SPECIFIED STANDARDS AND PERFORMANCE DATA AS INDICATED.

      d. NOTATION OF COORDINATION REQUIREMENTS.

      e. NOTATION OF DIMENSIONS ESTABLISHED BY FIELD MEASUREMENT.

      f. SUBMIT 3 BLACK-LINE PRINTS AND 2 ADDITIONAL PRINTS WHERE REQUIRED FOR MAINTENANCE MANUALS, PLUS THE NUMBER OF PRINTS NEEDED BY THE ENGINEER-FOR DISTRIBUTION. ONE PRINT WILL BE RETAINED; THE REMAINDER RETURNED. ONE OF THE PRINTS RETURNED SHALL BE MARKED-UP AND MAINTAINED AS A "RECORD DOCUMENT".

      g. DO NOT USE SHOP DRAWINGS WITHOUT AN APPROPRIATE FINAL STAMP INDICATING ACTION TAKEN IN CONNECTION WITH CONSTRUCTION.

      h. DO NOT ORDER ANY MATERIALS OR EQUIPMENT PRIOR TO RECEIVING FINAL APPROVED SHOP DRAWINGS.

      i. PROVIDE SUBMITTALS AS INDICATED IN SPECIFIC SPECIFICATION SECTIONS.

9. USE ADEQUATE NUMBERS OF SKILLED WORKMEN WHO ARE THOROUGHLY TRAINED AND EXPERIENCED IN THE NECESSARY CRAFTS AND WHO ARE COMPLETELY FAMILIAR WITH THE SPECIFIED REQUIREMENTS AND THE METHODS NEEDED FOR PROPER PERFORMANCE OF THE WORK.

10. THE CONTRACTOR SHALL COORDINATE ALL INTERRUPTIONS OF SERVICES AND LIMITATIONS OF ACCESS WITH THE OWNER NO LESS THAN 5 DAYS PRIOR TO THE INTERRUPTION.

11. OPERATION AND MAINTENANCE

   A. UPON COMPLETION OF ALL WORK AND TESTS, THE CONTRACTOR SHALL INSTRUCT THE OWNER OR THE OWNER'S REPRESENTATIVE IN THE OPERATION, ADJUSTMENT AND MAINTENANCE OF ALL EQUIPMENT FURNISHED. THE CONTRACTOR SHALL GIVE AT LEAST SEVEN (7) DAYS NOTICE TO THE OWNER AND THE ENGINEER IN ADVANCE OF THIS PERIOD.

   B. THE CONTRACTOR SHALL PREPARE THREE (3) COPIES OF A COMPLETE OPERATION AND MAINTENANCE MANUAL, BOUND IN BOOKLET FORM. ORGANIZE OPERATING AND MAINTENANCE DATA INTO SUITABLE SETS OF MANAGEABLE SIZE. BIND PROPERLY INDEXED DATA IN INDIVIDUAL HEAVY-DUTY 3-RING VINYL-COVERED BINDERS, WITH POCKET FOLDERS FOR FOLDED SHEET INFORMATION AND DESIGNATION PARTITIONS WITH IDENTIFICATION TABS. MARK APPROPRIATE IDENTIFICATION ON FRONT AND SPINE OF EACH BINDER.

   C. OPERATION AND MAINTENANCE MANUAL SHALL INCLUDE THE FOLLOWING:

      a. MANUFACTURER'S PRINTED OPERATING AND MAINTENANCE PROCEDURES.

      b. MAINTENANCE PROCEDURES FOR ROUTINE PREVENTATIVE MAINTENANCE AND TROUBLESHOOTING.

      c. COPIES OF WARRANTIES.

      d. APPROVED SHOP DRAWINGS AND PRODUCT DATA.

      e. BALANCE REPORTS.

      f. INCLUDE IN THE MANUAL, A TABULATED EQUIPMENT SCHEDULE FOR ALL EQUIPMENT. SCHEDULE SHALL INCLUDE PERTINENT DATA SUCH AS: MAKE, MODEL NUMBER, SERIAL NUMBER, VOLTAGE, NORMAL OPERATING CURRENT, BELT SIZE, FILTER QUANTITIES AND SIZES, BEARING NUMBER, ETC. SCHEDULE SHALL INCLUDE MAINTENANCE TO BE DONE AND FREQUENCY.

      g. MAINTENANCE AND INSTRUCTION MANUALS SHALL BE SUBMITTED TO THE OWNER AT THE SAME TIME AS THE SEVEN (7) DAY NOTICE IS GIVEN PRIOR TO THE INSTRUCTION PERIOD.

12. AS-BUILT DRAWINGS

   A. PREPARE AS-BUILT DRAWINGS TO A SCALE OF 1/4"=1'-0" OR LARGER; DETAILING THE ACTUAL INSTALLATION OF MAJOR ELEMENTS, COMPONENTS, AND SYSTEMS OF MECHANICAL EQUIPMENT AND MATERIALS. WHERE SHOP DRAWINGS ARE USED, RECORD A CROSS-REFERENCE AT THE CORRESPONDING LOCATION ON THE AS-BUILT DRAWINGS. GIVE PARTICULAR ATTENTION TO CONCEALED ELEMENTS THAT WOULD BE DIFFICULT TO MEASURE AND RECORD AT A LATER DATE.

   B. MARK NEW INFORMATION THAT IS IMPORTANT TO THE OWNER, BUT WAS NOT SHOWN ON CONTRACT DRAWINGS OR SHOP DRAWINGS.

   C. NOTE RELATED CHANGE ORDER NUMBERS WHERE APPLICABLE.

   D. ORGANIZE AS-BUILT DRAWINGS INTO MANAGEABLE SETS, BIND WITH DURABLE PAPER COVER SHEETS, AND PRINT SUITABLE TITLES, DATES AND OTHER IDENTIFICATION ON THE COVER OF EACH SET.

13. OBTAIN IN OWNER'S NAME WRITTEN EQUIPMENT AND MATERIAL WARRANTIES OFFERED IN MANUFACTURER'S PUBLISHED PRODUCT DATA WITHOUT EXCLUSION OR LIMITATION.

14. GUARANTEE WORK OF THESE CONTRACT DOCUMENTS IN WRITING FOR NOT LESS THAN ONE (1) YEAR FROM DATE OF FINAL NOTICE OF ACCEPTANCE. REPAIR OR REPLACE DEFECTIVE MATERIALS, EQUIPMENT, WORKMANSHIP AND INSTALLATION THAT DEVELOP WITHIN THIS PERIOD, PROMPT AND TO OWNER'S SATISFACTION AND CORRECT DAMAGE CAUSED IN MAKING NECESSARY REPAIRS AND REPLACEMENTS UNDER GUARANTEE WITHIN CONTRACT PRICE.

15. SUBMIT TO THE OWNER AN OFFICIAL CERTIFICATE OF INSURANCE FOR THEIR RECORDS.

MEANS AND METHODS ALL TRADES

1. INSTALL ALL EQUIPMENT AND MATERIALS IN ACCORDANCE WITH MANUFACTURER'S RECOMMENDATIONS

2. DO NOT BURN WASTE MATERIALS. DO NOT BURY DEBRIS OR EXCESS MATERIALS ON THE OWNER'S PROPERTY. DO NOT DISCHARGE VOLATILE, HARMFUL OR DANGEROUS MATERIALS INTO DRAINAGE SYSTEMS. REMOVE AND DISPOSE OF ALL WASTE MATERIALS, PACKAGING MATERIAL, SKIDS ETC. FROM THE SITE AND DISPOSE OF IN A LAWFUL MANNER IN ACCORDANCE WITH MUNICIPAL, STATE AND FEDERAL REGULATIONS.

3. MATERIALS AND EQUIPMENT SHALL BE UL LISTED WHERE STANDARD HAS BEEN ESTABLISHED.

4. CAREFULLY INSPECT ALL BUILDING ELEMENTS PRIOR TO CUTTING OR DRILLING INTO WALL, FLOORS OR CEILINGS. PATCH AND PAINT SURFACES DISTURBED BY WORK UNDER THIS CONTRACT AS REQUIRED TO RESTORE THEM TO THEIR ORIGINAL CONDITION.

5. SCAFFOLDING, RIGGING, HOISTING: THE CONTRACTOR SHALL FURNISH ALL SCAFFOLDING, RIGGING, HOISTING AND SERVICES NECESSARY FOR ERECTION AND DELIVERY INTO THE PREMISES ANY EQUIPMENT AND APPARATUS FURNISHED UNDER THIS DIVISION. REMOVE SAME FROM PREMISES WHEN NO LONGER REQUIRED.

6. EXCAVATION AND BACKFILLING: IT IS THE RESPONSIBILITY OF THE CONTRACTOR TO COORDINATE SIZES, DEPTHS, FILL AND BEDDING REQUIREMENTS AND ANY OTHER EXCAVATION WORK REQUIRED UNDER THESE SPECIFICATIONS

7. WATERPROOFING: WHERE ANY WORK PIERCES WATERPROOFING, INCLUDING WATERPROOF CONCRETE, ROOFS, EXTERIOR WALL AND FLOORS IN WET AREAS, THE METHOD OF INSTALLATION SHALL BE REVIEWED BY THE ENGINEER BEFORE WORK IS DONE. THE CONTRACTOR SHALL FURNISH ALL NECESSARY SLEEVES, CAULKING AND FLASHING REQUIRED TO MAKE OPENINGS ABSOLUTELY WATERTIGHT.

8. PROVIDE FIRESTOPPING AROUND ALL FIRE PROTECTION, PLUMBING, MECHANICAL AND ELECTRICAL PENETRATIONS THROUGH FIRE RATED PARTITIONS. PROVIDE ASBESTOS FREE FIRESTOPPING SYSTEM CAPABLE OF MAINTAINING AN EFFECTIVE BARRIER AGAINST FLAME AND GASES. SYSTEM SHALL BE UL LISTED AND COMPLY WITH ASTM E 814.

9. ACCESS DOORS SHALL BE PROVIDED IN CEILINGS, WALLS AND FLOORS AT ALL DAMPERS, VALVES, CONTROL DEVICES, AND OTHER APPARATUS AND EQUIPMENT REQUIRING PERODIC SERVICE AND INSPECTION. COORDINATE TYPE AND LOCATION WITH ARCHITECTURAL PLANS.

10. SEISMIC RESTRAINTS SHALL BE INSTALLED AS REQUIRED PER BUILDING CODE AND FIRE SAFETY CODE. RESTRAINTS SHALL BE INSTALLED IN ACCORDANCE WITH NFPA 13 AND SMACNA STANDARDS. SUBMIT SHOP DRAWINGS INCLUDING SEISMIC CALCULATIONS WITH PROFESSIONAL ENGINEER'S SEAL FOR REVIEW BY ENGINEER.

HVAC SPECIFICATIONS

1. DUCTWORK AND ACCESSORIES

   A. ALL DUCTWORK AND ACCESSORIES AS ITEMIZED HERE-IN SHALL BE GALVANIZED STEEL CONSTRUCTION, INCLUDING ALL FITTINGS AND FASTENERS AND SHALL COMPLY WITH THE LATEST EDITION OF SMACNA STANDARDS FOR 1" PRESSURE CLASS. ALL DUCTWORK DIMENSIONS SHOWN ARE INSIDE CLEAR DIMENSIONS. ALL SQUARE DUCT ELBOWS ARE TO BE INSTALLED WITH TURNING VANES. ALL RADIUSED DUCT ELBOWS SHALL HAVE MINIMUM CENTER LINE RADIUS EQUAL TO 1-1/2 TIMES THE DUCT WIDTH.

   B. FLEXIBLE DUCT RUNOUTS SHALL NOT EXCEED 10 FEET IN LENGTH, SHALL BE PREINSULATED WITH VAPOR BARRIER, CPE INNER LINER, FACTORY FABRICATED, AND SHALL COMPLY WITH NFPA 90A AND UL 181. THE INSULATION MATERIAL SURFACE SHALL NOT BE EXPOSED TO THE AIR STREAM. FLEXIBLE DUCT RUNOUTS SHALL BE INSTALLED FULLY EXTENDED AND SUPPORTED TO MINIMIZE BENDS. FLEXIBLE DUCT SHALL BE AS MANUFACTURERD BY THERMAFLEX, TUTTLE AND BAILEY OR APPROVED EQUAL. FLEXIBLE DUCT CONNECTORS APPROXIMATELY 6 INCHES IN LENGTH SHALL BE PROVIDED WHERE SHEET METAL CONNECTIONS ARE MADE TO AIR HANDLING EQUIPMENT.

2. DUCT ACCESS DOORS SHALL BE PROVIDED IN DUCTWORK AT ALL:

   A. AUTOMATIC DAMPERS, COILS, CONTROL DEVICES, AND OTHER APPARATUS REQUIRING SERVICE AND INSPECTION.

   B. MANUAL BALANCING DAMPERS SHALL BE PROVIDED FOR EACH DIFFUSER, GRILLE AND REGISTER, EACH BRANCH OF THE MAIN TRUNK DUCT AND AS INDICATED ON THE DRAWINGS.

   C. INSTALLATION OF DIFFUSERS GRILLES AND REGISTERS SHALL BE COORDINATED WITH AND SUITABLE FOR INSTALLATION IN, ON, OR FROM CEILING, WALL OR FLOORS SPECIFIED ON THE ARCHITECTURAL PLANS. THE CONTRACTOR MUST VERIFY THE CEILING OR WALL TYPES PRIOR TO ORDERING.

3. PIPING AND FITTINGS

   A. CONDENSATE DRAIN : SHALL BE SCHEDULE 40 PVC WITH SOLVENT WELD FITTINGS OR TYPE L COPPER TUBING WITH 95-5 TIN-ANTIMONY SOLDER FILLER METALS.

4. FLUE AND COMBUSTION AIR PIPING

   A. ALL PROPANE FIRED EQUIPMENT COMBUSTION AIR PIPING, FLUE AND JOINTS SHALL BE SCHEDULE 40 POLYVINYL CHLORIDE (PVC). JOINTS SHALL BE SOLVENT WELD.

5. INSULATION:

   A. INSULATION THICKNESS SHALL BE IN ACCORDANCE WITH LATEST EDITION OF ATHE ECC EXCEPT THAT PIPE INSULATION SHALL NOT BE LESS THAN 1" THICK AND, FLEXIBLE DUCTWORK INSULATION SHALL NOT BE LESS THAN 1-1/2" THICK. ALL INSULATION MATERIALS, ADHESIVES, COATINGS, AND OTHER ACCESSORIES SHALL HAVE FLAME SPREAD RATINGS OF 25 OR LESS, AND SMOKE DEVELOPED RATINGS OF 50 OR LESS AS TESTED BY ASTM E-84 (NFPA 255) METHOD. ALL INSULATION MATERIALS SHALL BE INSTALLED IN ACCORDANCE WITH THE MANUFACTURERS RECOMMENDATIONS AND IN ACCORDANCE WITH THE LATEST EDITION OF SMACNA AND ASHRAE STANDARDS.

   B. PIPE INSULATION SHALL BE FIBERGLASS WITH VAPOR BARRIER JACKET. PROVIDE INSULATION FOR THE FOLLOWING PIPING SYSTEMS:

   C. INTERIOR DUCT INSULATION MATERIALS SHALL BE FLEXIBLE FIBERGLASS DUCTWORK INSULATION WITH VAPOR BARRIER JACKET. DUCT INSULATION INSTALLED WITHIN MECHANICAL ROOMS SHALL BE RIGID, BOARD TYPE, MINIMUM 1" THICK. DUCTWORK ACOUSTIC LINING SHALL BE CELLULAR GLASS WITH FACE BONDED TO PROVIDE A SMOOTH DAMAGE RESISTANT FINISH. PROVIDE INSULATION FOR THE FOLLOWING DUCTWORK SYSTEMS:

      a. SUPPLY AIR DUCTWORK

      b. RETURN AIR DUCTWORK IN UNCONDITIONED SPACES (WHERE SPACE TEMPERATURE IS MORE THAN10 DEGREES F DIFFERENT FROM DUCT TEMPERATURE)

      c. OUTSIDE AIR INTAKE DUCTWORK

      d. OUTSIDE AIR AND EXHAUST PLENUMS AT LOUVER CONNECTIONS

      e. COMBUSTION AIR DUCTWORK

   D. EXTERIOR DUCTWORK INSULATION MATERIALS SHALL BE 2" RIGID POLYSTYRENE (R-8 MINIMUM) WITH PVC JACKETING SEALED WATER TIGHT. DUCTWORK INSULATION SHALL BE WATER TIGHT.

      a. SUPPLY AIR DUCTWORK

      b. RETURN AIR DUCTWORK

      c. OUTSIDE AIR INTAKE DUCTWORK

      d. OUTSIDE AIR AND EXHAUST PLENUMS AT LOUVER CONNECTIONS

      e. COMBUSTION AIR DUCTWORK

5. PIPING INSTALLATIONS

   A. INSTALL PIPING IN ACCORDANCE WITH ALL APPLICABLE CODES AND GOOD PRACTICES.

   B. INSTALL UNIONS OR FLANGES IN PIPES ADJACENT TO EACH VALVE, CONTROL DEVICE AND AT FINAL CONNECTIONS EACH PIECE OF EQUIPMENT.

   C. INSTALL DIELECTRIC UNIONS TO JOIN DISSIMILAR METALS.

   D. INSTALL AND ANCHOR PIPING TO ENSURE PROPER EXPANSION AND CONTRACTION.

   E. PROVIDE MANUAL AIR VENTS AT ALL HIGH POINTS AND DRAIN VALVES AT ALL LOW POINTS.

   F. ANCHOR PIPING TO ENSURE PROPER DIRECTION OF EXPANSION AND CONTRACTION.

   G. SUPPORT PIPING TO PREVENT VIBRATION OR SAGGING. PROVIDE HANGER SPACING ACCORDING TO DISTANCES LISTED IN APPLICABLE CODES AND REGULATIONS.

6. TESTING , ADJUSTING AND BALANCING

   A. THE MECHANICAL CONTRACTOR SHALL PROVIDE THE SERVICES OF AN INDEPENDENT TESTING, ADJUSTING, AND BALANCING (TAB) AGENCY TO PROVIDE TAB SERVICES FOR THE MECHANICAL SYSTEMS. THE TAB AGENCY SHALL BE CERTIFIED BY NATIONAL ENVIRONMENTAL BALANCING BUREAU (NEBB) OR THE ASSOCIATED AIR BALANCE COUNCIL (AABC) IN THOSE TESTING AND BALANCING DISCIPLINES REQUIRED FOR THIS PROJECT. THE TAB AGENCY SHALL HAVE AT LEAST ONE PROFESSIONAL ENGINEER REGISTERED IN THE STATE IN WHICH THE SERVICES ARE TO BE PERFORMED AND CERTIFIED BY NEBB OR AABC AS A TEST AND BALANCE ENGINEER.

   B. PRIOR TO TESTING, ADJUSTING, AND BALANCING, THE MECHANICAL CONTRACTOR SHALL VERIFY THAT THE SYSTEMS HAVE BEEN INSTALLED AND ARE OPERATING AS SPECIFIED. APPROVED SHOP DRAWINGS, AS BUILT DRAWINGS, AND ALL OTHER DATA REQUIRED FOR EACH SYSTEM AND/OR COMPONENT TO BE TESTED SHALL BE MADE AVAILABLE AT THE JOB SITE DURING THE ENTIRE TAB EFFORT. THE OWNER SHALL BE NOTIFIED IN WRITING OF ALL EQUIPMENT, COMPONENTS, OR BALANCING DEVICES, THAT ARE DAMAGED, INCORRECTLY INSTALLED, OR MISSING, AS WELL AS ANY DESIGN DEFICIENCIES THAT WILL PREVENT PROPER TESTING, ADJUSTING, AND BALANCING. TESTING, ADJUSTING, AND BALANCING SHALL NOT COMMENCE UNTIL APPROVED BY THE OWNER.

   C. PERFORM TESTING AND BALANCING PROCEDURES ON EACH SYSTEM IDENTIFIED, IN ACCORDANCE WITH THE DETAILED PROCEDURES OUTLINED IN EITHER NEBB: "PROCEDURAL STANDARDS FOR TESTING, ADJUSTING, AND BALANCING OF ENVIRONMENTAL SYSTEMS" OR AABC: "NATIONAL STANDARDS FOR TOTAL SYSTEM BALANCE." THE TAB AGENCY SHALL TEST, ADJUST, AND BALANCE THE FOLLOWING MECHANICAL SYSTEMS:

      a. ALL AIR HANDLING EQUIPMENT

      b. ALL SUPPLY AIR SYSTEMS

      c. ALL RETURN AIR SYSTEMS

      d. VERIFY OPERATION OF ALL TEMPERATURE CONTROL SYSTEMS

      e. TEST SYSTEMS FOR PROPER SOUND AND VIBRATION LEVELS

D. SUBMIT TESTING, ADJUSTING, AND BALANCING REPORTS BEARING THE SEAL AND SIGNATURE OF THE TAB PROFESSIONAL ENGINEER. PREPARE A REPORT OF RECOMMENDATIONS FOR CORRECTING UNSATISFACTORY MECHANICAL PERFORMANCES WHEN A SYSTEM CANNOT BE SUCCESSFULLY BALANCED.

E. PROVIDE ALL NECESSARY CONTROL DEVICES, EQUIPMENT, MATERIALS, LABOR, WIRE AND CONDUIT TO PERFORM THE SEQUENCES OF OPERATION AS INDICATED. WIRING AND CONDUIT SHALL BE INSTALLED IN ACCORDANCE WITH DIVISION 16. ALL CONTROL WIRING INSTALLED WITHIN AIR PLENUM SPACES TO BE TEFLON COATED RATED FOR PLENUM CEILINGS.

CAPITAL STUDIO
architects LLC
1379 MAIN STREET EAST HARTFORD CT. 06108
860.289.3262 fax 860.289.3163

THE STATE OF CONNECTICUT DEPARTMENT OF HOUSING (DOH) COMMUNITY DEVELOPMENT BLOCK GRANT - DISASTER RECOVERY (CDBG-DR) DOH OCCUPIED REHABILITATION and REBUILDING PROGRAM (OORR)

CARLSON RESIDENCE
APPLICATION No. 1939
39 ATTAWAN AVENUE
NIANTIC, CT 06357

CES
Consulting Engineering Services, Inc.
511 Middle Street
Middletown, CT 06457
Tel. (860) 632-1652
Fax. (860) 632-1758
CES #2014064.00

date	description	no.

revisions

M-5.1

date	JUNE 19, 2015
drawn	ANK
scale	AS SHOWN
checked	DTB
project no.	2014064.00
application no.	1939

Copyright © 2014 Capital Studio Architects, LLC

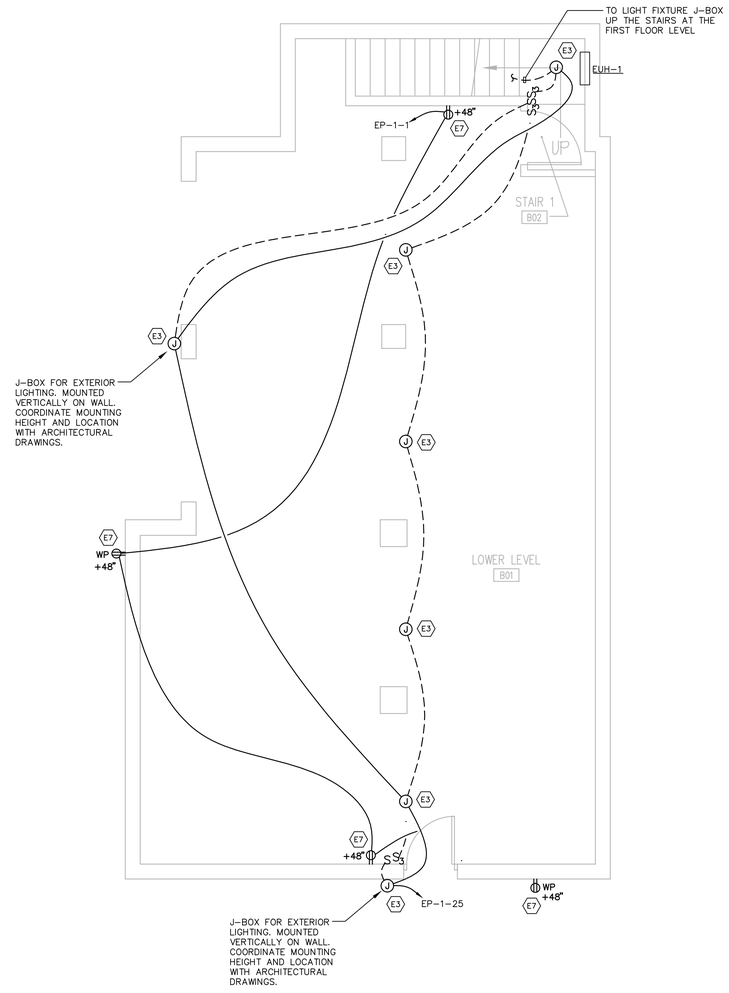

1 A-1.0 GROUND LEVEL PLAN

SCALE: 1/4"= 1'-0"

NORTH

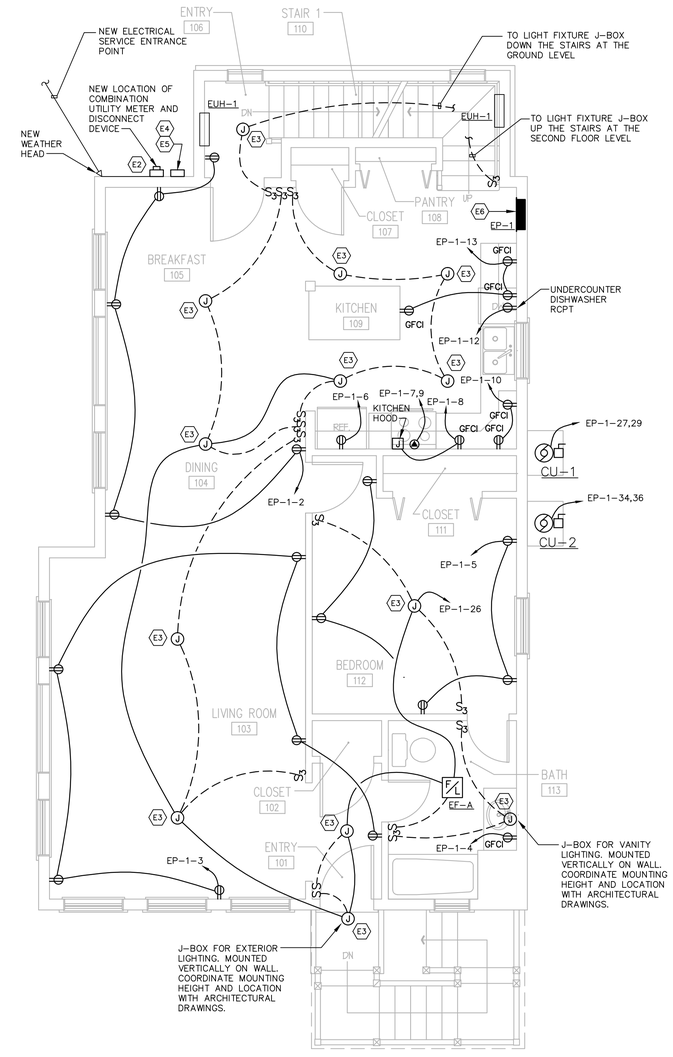

2 A-1.0 FIRST FLOOR

SCALE: 1/4"= 1'-0"

NORTH

GENERAL NOTES ALL TRADES

1. ELECTRICAL ITEMS INCLUDING BUT NOT LIMITED TO WIRING, EQUIPMENT, SWITCHES, OUTLETS, ETC SHALL BE INSTALLED ABOVE THE FLOOD PLANE AS DETERMINED BY THE ARCHITECTURAL PLANS.
2. WORK SHALL BE COORDINATED WITH ARCHITECTURAL PLANS.
3. CONTRACTOR SHALL FIELD VERIFY ACTUAL CONDITIONS PRIOR TO PROVIDING ALL EQUIPMENT AND PIPING.
4. CIRCUITS SHALL BE #12 FOR 20A-1P CIRCUIT BREAKERS AND #14 FOR 15A CIRCUIT BREAKERS IN PANEL INDICATED UNLESS NOTED OTHERWISE.

ELECTRICAL KEY NOTES

E1 PROVIDE 120VAC/20AMP GFCI RECEPTACLE AND KILL SWITCH FOR WATER HEATER. 12-2 FEED TO NEW 20A 1-POLE BREAKER IN PANEL 'EP-1'

E2 PROVIDE NEW ELECTRIC SERVICE TO THE RESIDENCE. PROVIDE NEW WEATHER HEAD, WIRING (FROM WEATHER HEAD TO METER), METER, METER SOCKET, NEW FEEDER TO PANEL 'EP-1' AND CONNECTION TO PANEL 'EP-1'. REFER TO DISTRIBUTION RISER DIAGRAM FOR MORE INFORMATION. COORDINATE WITH THE UTILITY COMPANY ALL WORK AND PARTS ASSOCIATED WITH PROVIDING A NEW SERVICE.

E3 PROVIDE 12-2 WIRING AND JUNCTION BOX TO THIS LOCATION. WIRING AND JUNCTION BOX SHALL BE PROTECTED FOR FUTURE USE AND INSTALLATION OF LIGHTING FIXTURE. OWNER SHALL PROVIDE LIGHTING FIXTURE BASED ON ALLOWANCE PROVIDED UNDER THIS PROJECT. REFER TO PANELBOARD SCHEDULE FOR CKT INFORMATION. REFER TO DWGS FOR WIRING INFORMATION.

E4 NEW TELEPHONE SERVICE SHALL BE PROVIDED. CONNECT TO EXISTING TELEPHONE DISTRIBUTION EQUIPMENT AND CABLING. COORDINATE WITH THE TELEPHONE COMPANY ALL WORK AND PARTS ASSOCIATED WITH PROVIDING A NEW SERVICE.

E5 NEW CATV SERVICE SHALL BE PROVIDED. CONNECT TO EXISTING CATV DISTRIBUTION EQUIPMENT AND CABLING. COORDINATE WITH THE CATV COMPANY ALL WORK AND PARTS ASSOCIATED WITH PROVIDING A NEW SERVICE.

E6 PROVIDE NEW PANEL 'EP-1' 200A/MCB, 2P, 120/240V, 42-POLE, 3-WIRE.

E7 CIRCUITS UNDER THIS KEYNOTE SHALL BE PROVIDED WITH CIRCUIT BREAKERS OF GFCI TYPE IN PANEL 'EP-1'

CAPITAL STUDIO architects LLC
1379 MAIN STREET EAST HARTFORD CT. 06108
860.289.3262 fax 860.289.3163

THE STATE OF CONNECTICUT DEPARTMENT OF HOUSING (DOH) COMMUNITY DEVELOPMENT BLOCK GRANT - DISASTER RECOVERY (CDBG-DR) DOH OCCUPIED REHABILITATION and REBUILDING PROGRAM (OORR)

CARLSON RESIDENCE
APPLICATION No. 1939
39 ATTAWAN AVENUE
NIANTIC, CT 06357

CES Consulting Engineering Services, Inc.
511 Middle Street
Middletown, CT 06457
Tel. (860) 632-1682
Fax. (860) 632-1768
CES #2014064.00

date	description	no.

revisions

ELECTRICAL NEW WORK GROUND LEVEL AND FIRST FLOOR PLANS

E-1.1

date	JUNE 19, 2015
drawn	VCM
scale	AS SHOWN
checked	DTB
project no.	2014064.00
application no.	1939

Copyright © 2014 Capital Studio Architects, LLC

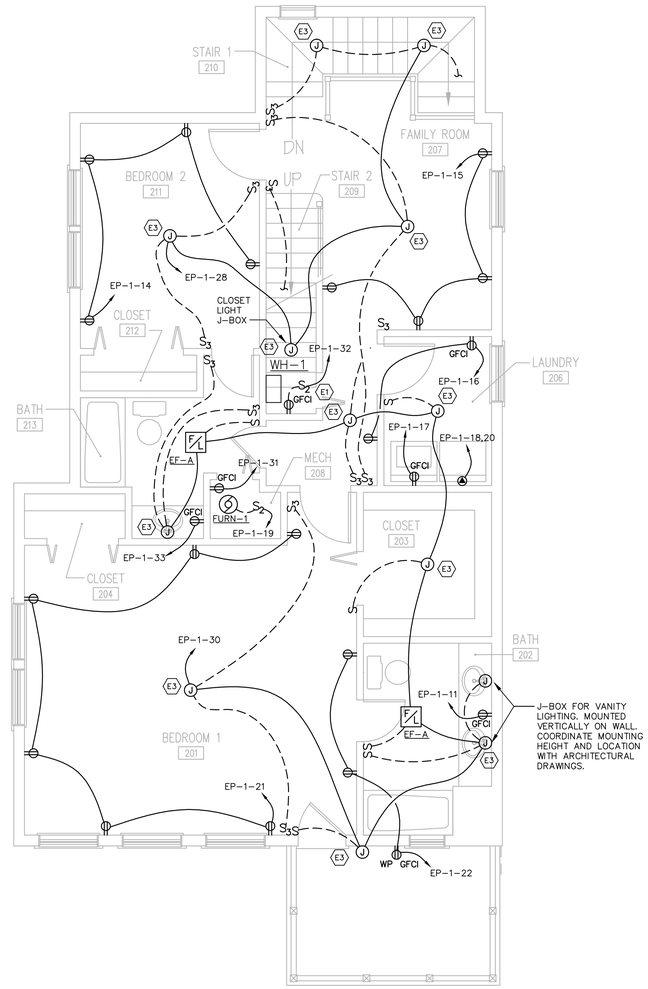

1 A-1.0 SECOND FLOOR

SCALE: 1/4"= 1'-0"

NORTH

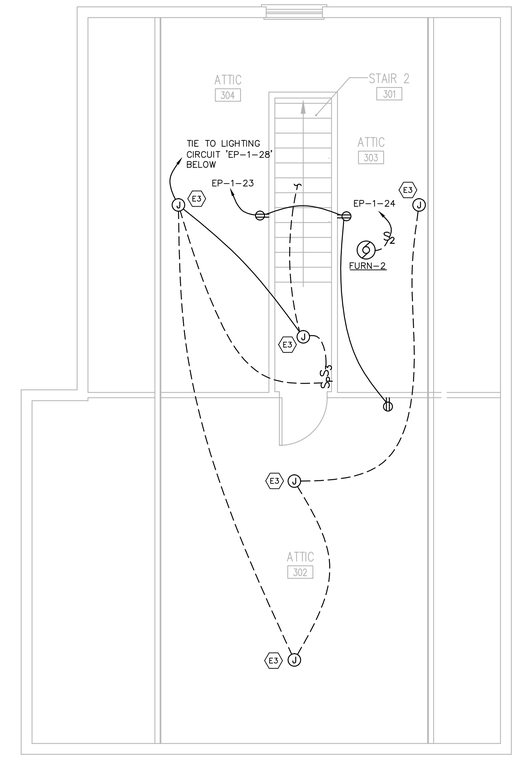

2 A-1.0 ATTIC PLAN

SCALE: 1/4"= 1'-0"

NORTH

GENERAL NOTES ALL TRADES

1. ELECTRICAL ITEMS INCLUDING BUT NOT LIMITED TO WIRING, EQUIPMENT, SWITCHES, OUTLETS, ETC SHALL BE INSTALLED ABOVE THE FLOOD PLANE AS DETERMINED BY THE ARCHITECTURAL PLANS.
2. WORK SHALL BE COORDINATED WITH ARCHITECTURAL PLANS.
3. CONTRACTOR SHALL FIELD VERIFY ACTUAL CONDITIONS PRIOR TO PROVIDING ALL EQUIPMENT AND PIPING.
4. CIRCUITS SHALL BE #12 FOR 20A-1P CIRCUIT BREAKERS AND #14 FOR 15A CIRCUIT BREAKERS IN PANEL INDICATED UNLESS NOTED OTHERWISE.

ELECTRICAL KEY NOTES

E1 PROVIDE 120VAC/20AMP GFCI RECEPTACLE AND KILL SWITCH FOR WATER HEATER. 12-2 FEED TO NEW 20A 1-POLE BREAKER IN PANEL 'EP-1'

E2 PROVIDE NEW ELECTRIC SERVICE TO THE RESIDENCE. PROVIDE NEW WEATHER HEAD, WIRING (FROM WEATHER HEAD TO METER), METER, METER SOCKET, NEW FEEDER TO PANEL 'EP-1' AND CONNECTION TO PANEL 'EP-1'. REFER TO DISTRIBUTION RISER DIAGRAM FOR MORE INFORMATION. COORDINATE WITH THE UTILITY COMPANY ALL WORK AND PARTS ASSOCIATED WITH PROVIDING A NEW SERVICE.

E3 PROVIDE 12-2 WIRING AND JUNCTION BOX TO THIS LOCATION. WIRING AND JUNCTION BOX SHALL BE PROTECTED FOR FUTURE USE AND INSTALLATION OF LIGHTING FIXTURE. OWNER SHALL PROVIDE LIGHTING FIXTURE BASED ON ALLOWANCE PROVIDED UNDER THIS PROJECT. REFER TO PANELBOARD SCHEDULE FOR CKT INFORMATION. REFER TO DWGS FOR WIRING INFORMATION.

E4 NEW TELEPHONE SERVICE SHALL BE PROVIDED. CONNECT TO EXISTING TELEPHONE DISTRIBUTION EQUIPMENT AND CABLING. COORDINATE WITH THE TELEPHONE COMPANY ALL WORK AND PARTS ASSOCIATED WITH PROVIDING A NEW SERVICE.

E5 NEW CATV SERVICE SHALL BE PROVIDED. CONNECT TO EXISTING CATV DISTRIBUTION EQUIPMENT AND CABLING. COORDINATE WITH THE CATV COMPANY ALL WORK AND PARTS ASSOCIATED WITH PROVIDING A NEW SERVICE.

E6 PROVIDE NEW PANEL 'EP-1' 200A/MCB, 2P, 120/240V, 42-POLE, 3-WIRE.

E7 CIRCUITS UNDER THIS KEYNOTE SHALL BE PROVIDED WITH CIRCUIT BREAKERS OF GFCI TYPE IN PANEL 'EP-1'

CAPITAL STUDIO architects LLC
1379 MAIN STREET EAST HARTFORD CT. 06108
860.289.3262 fax 860.289.3163

THE STATE OF CONNECTICUT DEPARTMENT OF HOUSING (DOH) COMMUNITY DEVELOPMENT BLOCK GRANT - DISASTER RECOVERY (CDBG-DR) DOH OCCUPIED REHABILITATION and REBUILDING PROGRAM (OORR)

CARLSON RESIDENCE
APPLICATION No. 1939
39 ATTAWAN AVENUE
NIANTIC, CT 06357

CES
Consulting Engineering Services, Inc.
511 Middle Street
Middletown, CT 06457
Tel. (860) 632-1682
Fax. (860) 632-1768
CES #2014064.00

date	description	no.

revisions

ELECTRICAL NEW WORK SECOND AND ATTIC FLOOR PLANS

E-1.2

date	JUNE 19, 2015
drawn	VCM
scale	AS SHOWN
checked	DTB
project no.	2014064.00
application no.	1939

Copyright © 2014 Capital Studio Architects, LLC

RESIDENTIAL ELECTRIC SERVICE CALCULATION SHEET

RESIDENCE: 39 Attawan Ave
NUMBER: 2014064
LOCATION: Niantic - CT
This Calculation sheet is based on the NEC Section 220-B and Annex D.

SYSTEM VOLTAGE	SYSTEM PHASE	SQUARE FEET
240	1	3,407

General Lighting and Receptacle Load

EQUIPMENT	QUANTITY	LOAD %	UNIT VA	LOAD VA	
Lighting/Recept	3,407	100%	3	10,222	NO DIVERSITY

Small Appliance Load

EQUIPMENT	QUANTITY	LOAD %	UNIT VA	LOAD VA
Miscellaneous	2	100%	1,500	3,000

Laundry Load

EQUIPMENT	QUANTITY	LOAD %	UNIT VA	LOAD VA	
Clothes Washer	1	100%	1,500	1,500	
LIGHTING/RECEPT/SMALL APP/LAUNDRY SUBTOTAL				14,722	14,722

DESCRIPTION	LOAD	FACTORS	UNIT VA	LOAD VA
First 3K VA	up to 3K	100%	3,000	3,000
3001-120K VA	up to 117k	35%	11,722	4,103
120001VA and up		25%	0	0
SUBTOTAL				7,103

Fixed Appliance Loads (If > or = to 4 then 75% - See NEC Section 220

EQUIPMENT	QUANTITY	LOAD %	UNIT VA	LOAD VA	
A/V	0	75%	1,000	0	0
Refrigerator/Freezer	1	75%	1,200	900	1,200
Cooktop (gas)	0	75%	250	0	0
Hood	1	75%	500	375	500
Dishwasher	1	75%	1,200	900	1,200
Microwave	1	75%	1,200	900	1,200
Freezer Drawers	0	75%	750	0	0
Refrigerator Drawers	0	75%	750	0	0
Warming Drawer	0	75%	850	0	0
Washer	1	75%	1,000	750	1,000
Dryer (gas)	0	75%	500	0	0
Steam Shower steam generat	0	75%	750	0	0
Fixed Appliance Loads Subtotal				3,825	

Dryers (Refer to NEC Section 220.54 for Demand Factors)

EQUIPMENT	QUANTITY	LOAD %	UNIT VA	LOAD VA	
Dryer (elec)	1	100%	5,000	5,000	5,000

Electric Cooking (Refer to Table 220.55 in the NEC for appropriate demand factors)

EQUIPMENT	QUANTITY	LOAD %	UNIT VA	LOAD VA	
Electric Range	1	100%	8,000	8,000	8,000
Electric Cooking Loads Subtotal				8,000	

HVAC

Winter Load	QUANTITY	LOAD %	UNIT VA	LOAD VA
Heat Pumps	1	100%	1,200	1,200
Winter Total	-	-	-	1,200

Summer Load	QUANTITY	LOAD %	UNIT VA	LOAD VA
A/C	1	100%	4,600	4,600
Summer Total	-	-	-	4,600

High Load Season	4,600		4,600
TOTAL VOLT-AMPERES	28,528	No Diversity VA	37,422
MIN SERVICE REQUIRED	119	No Diversity Amps	156
NEW DWELLING SERVICE BREAKER (AMPS)	200	Diversity Taken	76.2%

CES ENGINEERING, LLC

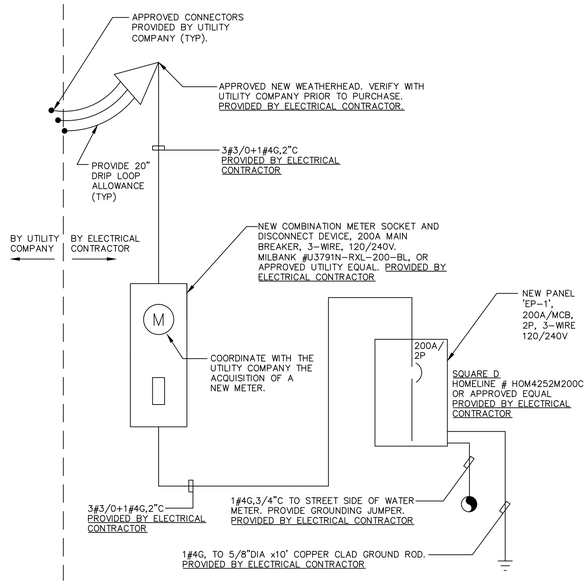

SERVICE ENTRANCE / DISTRIBUTION RISER DIAGRAM

N.T.S.

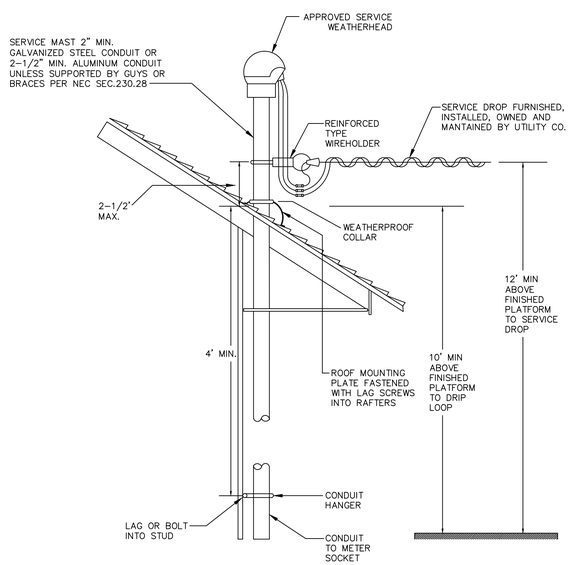

TYPICAL ELECTRICAL SERVICE MAST DETAIL

N.T.S.

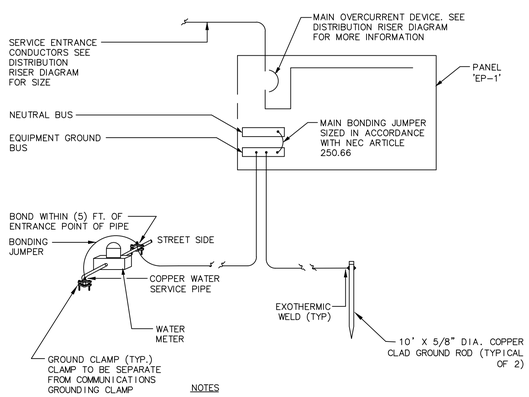

NOTES

1. THE GROUNDING ELECTRODE SYSTEM SHALL COMPLY WITH ARTICLE 250 OF THE CURRENT N.E.C.
2. BOND TO ALL GROUNDING ELECTRODE TYPES PRESENT.

TYPICAL MAIN ELECTRIC GROUNDING DETAIL

N.T.S.

ELECTRICAL ABBREVIATIONS

A/AMP	AMPERE	NA	NOT APPLICABLE
AC	ALTERNATING CURRENT	NEC	NATIONAL ELECTRIC CODE
ACU	AIR CONDITIONING UNIT	NIC	NOT IN CONTRACT
AFF	ABOVE FINISHED FLOOR	NL	NEW LOCATION OF EXISTING RELOCATED
AFG	ABOVE FINISHED GRADE	NR	NEW TO REPLACE EXISTING
AWG	AMERICAN WIRE GAUGE	NTS	NOT TO SCALE
BSMT	BASEMENT	P	POLE
C	CONDUIT	PE	PRIMARY ELECTRICAL SERVICE
CATV	CABLE TELEVISION	PF	POWER FACTOR
C/B	CIRCUIT BREAKER	PH/ø	PHASE
CKT	CIRCUIT	PNL	PANEL
°	DEGREE	PVC	POLYVINYL CHLORIDE CONDUIT
DIA/ø	DIAMETER	RE	REMOVE EXISTING
DN	DOWN	RGS	RIGID GALVANIZED STEEL CONDUIT
DWG	DRAWING	RL	RELOCATE EXISTING
EC	ELECTRICAL CONTRACTOR	RM	ROOM
ETR	EXISTING TO REMAIN	RR	REMOVE AND REPLACE ON NEW SURFACE
ELEC	ELECTRICAL	SPEC	SPECIFICATION
EWH	ELECTRIC WATER HEATER	SWBD	SWITCHBOARD
GFCI	GROUND FAULT INTERRUPTER	TELE	TELECOMMUNICATIONS/TELEPHONE
JB	JUNCTION BOX	TV	TELEVISION
KVA	KILOVOLT AMPERE	T/TX	TRANSFORMER
KW	KILOWATT	TYP	TYPICAL
MAX	MAXIMUM	V	VOLTS
MCCB	MOLDED CASE CIRCUIT BREAKER	VA	VOLT AMPERE
MIN	MINIMUM	VAC	VOLTS ALTERNATING CURRENT
MLO	MAIN LUGS ONLY	W	WATT, WIRE
		WP	WEATHERPROOF

ELECTRICAL SYMBOL LIST

SYMBOL	DESCRIPTION
	SURFACE MOUNTED PANELBOARD
	RECESSED PANELBOARD
	ELECTRICAL MOTOR
	ELECTRICAL METER
	BRANCH CIRCUIT WIRING, CONCEALED IN WALLS OR CEILINGS
	HOMERUN TO PANELBOARD, UNLESS INDICATED OTHERWISE SHALL BE CONNECTED TO A 1 POLE, 20 AMP CIRCUIT BREAKER
	BRANCH CIRCUIT WIRING, SWITCHED
J , J	JUNCTION BOX
	SPECIAL PURPOSE RECEPTACLE, NEMA CONFIGURATION AS INDICATED
S3	THREE POLE SWITCH
S4	FOUR POLE SWITCH
S2	TWO POLE SWITCH
S	SINGLE POLE SWITCH
GFCI	GFCI DUPLEX RECEPTACLE
C	CEILING MOUNTED DUPLEX RECEPTACLE
WP	DUPLEX RECEPTACLE, WEATHER PROTECTED
F/L	FAN LIGHT COMBINATION UNIT

PANELBOARD SCHEDULE

PANELBOARD	LOCATION	MAIN	VOLTAGE	PHASE	WIRE	FEEDER	SE RATED	MOUNTING	MIN SCR	REMARKS
EP-1	KITCHEN 109	200A/2P MCB	120/240	1	3	3#3/0+1#4G,2"C	N/A	RECESSED	10,000	–

CKT	DESCRIPTION	P	AT	AF	CIRCUITRY	KVA	CKT	DESCRIPTION	P	AT	AF	CIRCUITRY	KVA
1	LOWER LEVEL – RCPT**	1	20	20	12-2	0.72	2	RM 105 – RCPT**	1	20	20	12-2	0.90
3	RM 103 – RCPT**	1	20	20	12-2	1.08	4	BATH 113 – RCPT**	1	20	20	12-2	0.18
5	RM 112 – RCPT**	1	20	20	12-2	0.90	6	FRIDGE RCPT**	1	20	20	12-2	1.5
7	RANGE	2	50	50	8-3	8.0	8	KITCHEN – RCPT**	1	20	20	12-2	0.86
9	–	–	–	–	–	–	10	KITCHEN – RCPT**	1	20	20	12-2	0.36
11	BATH 202 – RCPT**	1	20	20	12-2	0.18	12	DISHWASHER**	1	20	20	12-2	1.2
13	KITCHEN – RCPT**	1	20	20	12-2	0.54	14	RM 211 – RCPT**	1	20	20	12-2	0.72
15	RM 207 – RCPT**	1	20	20	12-2	0.72	16	RM 206 – RCPT**	1	20	20	12-2	0.36
17	WASHER**	1	20	20	12-2	1.5	18	DRYER	2	30	30	10-3	5.0
19	FURN-1	1	20	20	12-2	1.3	20	–	–	–	–	–	–
21	RM 201 – RCPT**	1	20	20	12-2	1.08	22	RM 202 – RCPT**	1	20	20	12-2	0.72
23	ATTIC – RCPT**	1	20	20	12-2	0.54	24	FURN-2	1	20	20	12-2	1.3
25	LTG LOWER LEVEL**	1	20	20	12-2	0.45	26	RM 103 – 'EF-A'/LIGHTING**	1	20	20	12-2	0.80
27	CU-1	2	20	20	12-3	2.3	28	RM 211 – LIGHTING**	1	20	20	12-2	0.50
29	–	–	–	–	–	–	30	RM 201 – 'EF-A'/LIGHTING**	1	20	20	12-2	0.50
31	MECHANICAL RM – RCPT**	1	20	20	12-2	0.18	32	WH-1	1	20	20	12-2	1.0
33	BATH 213 – RCPT**	1	20	20	12-2	0.18	34	CU-2	2	20	20	12-3	2.3
35	EUH-1 / STAIR B02	1	20	20	12-2	1.5	36	–	–	–	–	–	–
37	SPARE**	1	20	20	–	–	38	EUH-1 / ENTRY 106	1	20	20	12-2	1.5
39	SPARE**	1	20	20	–	–	40	EUH-1 / STAIR 210	1	20	20	12-2	1.5
41	SPARE**	1	20	20	–	–	42	SPARE**	1	20	20	–	–
					SUBTOTAL KVA	22.25						SUBTOTAL KVA	19.16
												TOTAL KVA	41.41

* CONTRACTOR SHALL FIELD VERIFY THE WIRING SIZE OF EXISTING CIRCUITS AND PROVIDE APPROPRIATELY SIZED AFCI CIRCUIT BREAKERS.

** CIRCUIT SHALL BE PROVIDED WITH CIRCUIT BREAKER OF AFCI TYPE.

PANELBOARD REMARKS:

1. PROVIDE WITH EQUIPMENT GROUND BUS.
2. PROVIDE WITH 100% RATED NEUTRAL BUS.
3. BRANCH CIRCUIT BREAKERS SHALL BE BOLT-ON TYPE.
4. PROVIDE WITH HINGED DOOR WITH IN DOOR TRIM.
5. PROVIDE A TYPED WRITTEN PANELBOARD DIRECTORY AND A DIRECTORY HOLDER ON THE INSIDE COVER OF DOOR.
6. PROVIDE WITH COPPER BUS.
7. THE CONTRACTOR SHALL BE RESPONSIBLE FOR ALL TYPES AND QUANTITIES OF CIRCUIT BREAKERS INDICATED ON THE DRAWINGS.
8. CIRCUITRY SPECIFIED IS FOR WIRING FROM PANEL TO FIRST DEVICE. CONTRACTOR TO PROVIDE CALL MULTI-CONDUCTOR CABLES AS REQUIRED FOR 3 & 4 WAY SWITCHES.
9. CU-1 AND CU-2 SHALL BE PROVIDED WITH A 20A-2P NON-FUSED DISCONNECT WITHIN PROXIMITY OF THE EQUIPMENT, EC SHALL COORDINATE MOUNTING HEIGHT IN FIELD.

CAPITAL STUDIO architects LLC
1379 MAIN STREET 860.289.3262
EAST HARTFORD CT. 06108 fax 860.289.3163

THE STATE OF CONNECTICUT DEPARTMENT OF HOUSING (DOH) COMMUNITY DEVELOPMENT BLOCK GRANT - DISASTER RECOVERY (CDBG-DR) DOH OCCUPIED REHABILITATION and REBUILDING PROGRAM (OORR)

CARLSON RESIDENCE APPLICATION No. 1939 39 ATTAWAN AVENUE NIANTIC, CT 06357

CES Consulting Engineering Services, Inc.
511 Middle Street
Middletown, CT 06457
Tel.(860) 632-1682
Fax.(860) 632-1768
CES #2014064.00

date	description	no.

revisions

ELECTRICAL SCHEDULES AND DETAILS

E-5.0

date	JUNE 19, 2015
drawn	VCM
scale	AS SHOWN
checked	DTB
project no.	2014064.00
application no.	1939

Copyright © 2014 Capital Studio Architects, LLC

GENERAL PROCEDURES ALL TRADES

1. THESE SPECIFICATIONS ARE APPLICABLE TO ALL PLUMBING, MECHANICAL AND ELECTRICAL DRAWINGS UNLESS NOTED OTHERWISE.

2. DESCRIPTION

   A. THIS PROJECT COMPRISES ALTERATIONS AND RENOVATIONS TO THE EXISTING BUILDING. THE EXISTING BUILDING IS CURRENTLY OCCUPIED AND THE PROJECT WILL PROCEED IN A MANNER WHICH WILL MINIMIZE ANY INCONVENIENCE TO THE BUILDING OCCUPANTS.

   B. SCOPE OF WORK CONSISTS OF INSTALLATION OF MATERIALS TO BE FURNISHED UNDER THE CONTRACT DOCUMENTS AND WITHOUT LIMITING GENERALITY THEREOF CONSISTS OF FURNISHING LABOR, MATERIALS, EQUIPMENT, HOISTING, PLANT, TRANSPORTATION, RIGGING, STAGING, APPURTENANCES, AND SERVICES NECESSARY AND/OR INCIDENTAL TO PROPERLY COMPLETE ALL WORK AS SHOWN ON THE DRAWINGS AND AS DESCRIBED HEREIN.

3. DEFINITIONS: THE FOLLOWING DEFINITIONS APPLY TO THIS CONTRACT

   A. FURNISH: THE TERM "FURNISH" MEANS TO "SUPPLY AND DELIVER TO THE PROJECT SITE, READY FOR UNLOADING, UNPACKING, ASSEMBLY, INSTALLATION, AND SIMILAR OPERATIONS."

   B. INSTALL: THE TERM "INSTALL" IS USED TO DESCRIBE OPERATIONS AT PROJECT SITE INCLUDING THE ACTUAL "UNLOADING, UNPACKING, ASSEMBLY, ERECTION, PLACING, ANCHORING, APPLYING, WORKING TO DIMENSION, FINISHING, CURING, PROTECTING, CLEANING, AND SIMILAR OPERATIONS."

   C. PROVIDE: THE TERM "PROVIDE" MEANS "TO FURNISH AND INSTALL, COMPLETE AND READY FOR THE INTENDED USE."

   D. REMOVE: THE TERM REMOVE MEANS TO DISCONNECTFROM ITS PRESENT POSITION, REMOVE FROM THE PREMISES AND TO DISPOSE OF IN A LEGAL MANNER.

   E. SUBSTITUTIONS: "SUBSTITUTIONS' ARE REQUESTS FOR CHANGES IN PRODUCTS, MATERIALS AND METHODS OF CONSTRUCTION AS PROPOSED BY THE CONTRACTOR AFTER AWARD OF THE CONTRACT.

4. DRAWINGS

   A. PROVIDE ALL MATERIALS, EQUIPMENT AND LABOR NECESSARY TO COMPLETE THE WORK OUTLINED ON THESE CONTRACT DOCUMENTS. THE CONTRACTOR IS TO NOTE THAT THESE DOCUMENTS ARE DIAGRAMMATIC ONLY AND THAT FINAL PLACEMENT OF EQUIPMENT OR DEVICES IN THE FIELD MAY NOT DIRECTLY CORRESPOND TO THAT WHICH IS SHOWN ON THE DRAWINGS. IF A CONFLICT IN POSITIONING OCCURS THE CONTRACTOR IS TO NOTIFY THE ENGINEER IMMEDIATELY TO ASCERTAIN WHAT THE INTENT WAS BY THE DESIGN PROFESSIONAL.

5. SURVEY AND MEASUREMENTS:

   A. PRIOR TO SUBMITTING BID, VISIT SITE AND IDENTIFY EXISTING CONDITIONS AND DIFFICULTIES THAT WILL AFFECT WORK TO BE PERFORMED. NO COMPENSATION WILL BE GRANTED FOR ADDITIONAL WORK CAUSED BY UNFAMILIARITY WITH SITE CONDITIONS THAT ARE VISIBLE OR READILY IDENTIFIED BY EXPERIENCED OBSERVERS. INCLUDE IN THE BID ALL DEMOLITION WORK REQUIRED.

   B. DO NOT SCALE DRAWINGS. SCALE INDICATED ON DRAWINGS IS FOR ESTABLISHING REFERENCE POINTS ONLY. ACTUAL FIELD CONDITIONS SHALL GOVERN ALL DIMENSIONS.

   C. PRIOR TO ORDERING ANY MATERIALS AND EQUIPMENT, THOROUGHLY REVIEW THE SITE CONDITIONS TO DETERMINE IF ADEQUATE CLEARANCES AND ACCESS IS ALLOWED TO INSTALL THE COMPONENTS. ORDER EQUIPMENT BROKEN DOWN AS NECESSARY TO ALLOW FOR PROPER RIGGING THROUGH THE PROJECT AREA. PROVIDE ALL NECESSARY ALTERATIONS TO THE STRUCTURE OF THE BUILDING AS NECESSARY TO RIG THE EQUIPMENT IN PLACE.

   D. ARRANGE INSTALLATION TO PROVIDE ACCESS TO EQUIPMENT FOR EASY MAINTENANCE AND REPAIR.

6. CODES AND STANDARDS: ALL WORK SHALL BE COMPLETED IN ACCORDANCE WITH THE LATEST STATE OF CONNECTICUT ACCEPTED VERSION OF THE FOLLOWING

   A. INTERNATIONAL RESIDENTIAL CODE

   B. INTERNATIONAL BUILDING CODE

   C. INTERNATIONAL PLUMBING CODE

   D. INTERNATIONAL MECHANICAL CODE

   E. NATIONAL ELECTRIC CODE (NFPA 70)

   F. THE LIFE SAFETY CODE (NFPA 101)

7. PERMITS AND FEES: THE CONTRACTOR SHALL GIVE ALL NECESSARY NOTICES, OBTAIN ALL PERMITS; AND PAY ALL GOVERNMENT AND STATE SALES TAXES AND FEES WHERE APPLICABLE, AND OTHER COSTS, INCLUDING UTILITY CONNECTIONS OR EXTENSIONS IN CONNECTION WITH THE WORK, FILE ALL NECESSARY DRAWINGS, PREPARE ALL DOCUMENTS AND OBTAIN ALL NECESSARY APPROVALS OF ALL GOVERNMENTAL AND STATE DEPARTMENTS HAVING JURISDICTION, OBTAIN ALL REQUIRED CERTIFICATES OF INSPECTION FOR HIS WORK, AND DELIVER A COPY TO THE OWNER AND ENGINEER BEFORE REQUEST FOR ACCEPTANCE AND FINAL PAYMENT FOR THE WORK.

8. SHOP DRAWINGS:

   A. SUBMIT NEWLY PREPARED INFORMATION, DRAWN TO ACCURATE SCALE OF 1/4"=1'0". HIGHLIGHT, ENCIRCLE, OR OTHERWISE INDICATE DEVIATIONS FROM THE CONTRACT DOCUMENTS. DO NOT REPRODUCE CONTRACT DOCUMENTS OR COPY STANDARD INFORMATION AS THE BASIS OF SHOP DRAWINGS. STANDARD INFORMATION PREPARED WITHOUT SPECIFIC REFERENCE TO THE PROJECT IS NOT CONSIDERED SHOP DRAWINGS.

   B. SHOP DRAWINGS INCLUDE EQUIPMENT SUBMITTALS, FABRICATION AND INSTALLATION DRAWINGS, SETTING DIAGRAMS, SCHEDULES, PATTERNS, TEMPLATES AND SIMILAR DRAWINGS. INCLUDE THE FOLLOWING INFORMATION:

      a. DIMENSIONS.

      b. IDENTIFICATION OF PRODUCTS AND MATERIALS INCLUDED.

      c. COMPLIANCE WITH SPECIFIED STANDARDS AND PERFORMANCE DATA AS INDICATED.

      d. NOTATION OF COORDINATION REQUIREMENTS.

      e. NOTATION OF DIMENSIONS ESTABLISHED BY FIELD MEASUREMENT.

      f. SUBMIT 3 BLACK-LINE PRINTS AND 2 ADDITIONAL PRINTS WHERE REQUIRED FOR MAINTENANCE MANUALS, PLUS THE NUMBER OF PRINTS NEEDED BY THE ENGINEER FOR DISTRIBUTION. ONE PRINT WILL BE RETAINED; THE REMAINDER RETURNED. ONE OF THE PRINTS RETURNED SHALL BE MARKED-UP AND MAINTAINED AS A "RECORD DOCUMENT".

      g. DO NOT USE SHOP DRAWINGS WITHOUT AN APPROPRIATE FINAL STAMP INDICATING ACTION TAKEN IN CONNECTION WITH CONSTRUCTION.

      h. DO NOT ORDER ANY MATERIALS OR EQUIPMENT PRIOR TO RECEIVING FINAL APPROVED SHOP DRAWINGS.

      i. PROVIDE SUBMITTALS AS INDICATED IN SPECIFIC SPECIFICATION SECTIONS.

9. USE ADEQUATE NUMBERS OF SKILLED WORKMEN WHO ARE THOROUGHLY TRAINED AND EXPERIENCED IN THE NECESSARY CRAFTS AND WHO ARE COMPLETELY FAMILIAR WITH THE SPECIFIED REQUIREMENTS AND THE METHODS NEEDED FOR PROPER PERFORMANCE OF THE WORK.

10. THE CONTRACTOR SHALL COORDINATE ALL INTERRUPTIONS OF SERVICES AND LIMITATIONS OF ACCESS WITH THE OWNER NO LESS THAN 5 DAYS PRIOR TO THE INTERRUPTION.

11. OPERATION AND MAINTENANCE

   A. UPON COMPLETION OF ALL WORK AND TESTS, THE CONTRACTOR SHALL INSTRUCT THE OWNER OR THE OWNER'S REPRESENTATIVE IN THE OPERATION, ADJUSTMENT AND MAINTENANCE OF ALL EQUIPMENT FURNISHED. THE CONTRACTOR SHALL GIVE AT LEAST SEVEN (7) DAYS NOTICE TO THE OWNER AND THE ENGINEER IN ADVANCE OF THIS PERIOD.

   B. THE CONTRACTOR SHALL PREPARE THREE (3) COPIES OF A COMPLETE OPERATION AND MAINTENANCE MANUAL, BOUND IN BOOKLET FORM. ORGANIZE OPERATING AND MAINTENANCE DATA INTO SUITABLE SETS OF MANAGEABLE SIZE. BIND PROPERLY INDEXED DATA IN INDIVIDUAL HEAVY-DUTY 3-RING VINYL-COVERED BINDERS, WITH POCKET FOLDERS FOR FOLDED SHEET INFORMATION AND DESIGNATION PARTITIONS WITH IDENTIFICATION TABS. MARK APPROPRIATE IDENTIFICATION ON FRONT AND SPINE OF EACH BINDER.

   C. OPERATION AND MAINTENANCE MANUAL SHALL INCLUDE THE FOLLOWING:

      a. MANUFACTURER'S PRINTED OPERATING AND MAINTENANCE PROCEDURES.

      b. MAINTENANCE PROCEDURES FOR ROUTINE PREVENTATIVE MAINTENANCE AND TROUBLESHOOTING.

      c. COPIES OF WARRANTIES.

      d. APPROVED SHOP DRAWINGS AND PRODUCT DATA.

      e. BALANCE REPORTS.

      f. INCLUDE IN THE MANUAL, A TABULATED EQUIPMENT SCHEDULE FOR ALL EQUIPMENT. SCHEDULE SHALL INCLUDE PERTINENT DATA SUCH AS: MAKE, MODEL NUMBER, SERIAL NUMBER, VOLTAGE, NORMAL OPERATING CURRENT, BELT SIZE, FILTER QUANTITIES AND SIZES, BEARING NUMBER, ETC. SCHEDULE SHALL INCLUDE MAINTENANCE TO BE DONE AND FREQUENCY.

      g. MAINTENANCE AND INSTRUCTION MANUALS SHALL BE SUBMITTED TO THE OWNER AT THE SAME TIME AS THE SEVEN (7) DAY NOTICE IS GIVEN PRIOR TO THE INSTRUCTION PERIOD.

12. AS-BUILT DRAWINGS

   A. PREPARE AS-BUILT DRAWINGS TO A SCALE OF 1/4"=1'-0" OR LARGER; DETAILING THE ACTUAL INSTALLATION OF MAJOR ELEMENTS, COMPONENTS, AND SYSTEMS OF MECHANICAL EQUIPMENT AND MATERIALS. WHERE SHOP DRAWINGS ARE USED, RECORD A CROSS-REFERENCE AT THE CORRESPONDING LOCATION ON THE AS-BUILT DRAWINGS. GIVE PARTICULAR ATTENTION TO CONCEALED ELEMENTS THAT WOULD BE DIFFICULT TO MEASURE AND RECORD AT A LATER DATE.

   B. MARK NEW INFORMATION THAT IS IMPORTANT TO THE OWNER, BUT WAS NOT SHOWN ON CONTRACT DRAWINGS OR SHOP DRAWINGS.

   C. NOTE RELATED CHANGE ORDER NUMBERS WHERE APPLICABLE.

   D. ORGANIZE AS-BUILT DRAWINGS INTO MANAGEABLE SETS, BIND WITH DURABLE PAPER COVER SHEETS, AND PRINT SUITABLE TITLES, DATES AND OTHER IDENTIFICATION ON THE COVER OF EACH SET.

13. OBTAIN IN OWNER'S NAME WRITTEN EQUIPMENT AND MATERIAL WARRANTIES OFFERED IN MANUFACTURER'S PUBLISHED PRODUCT DATA WITHOUT EXCLUSION OR LIMITATION.

14. GUARANTEE WORK OF THESE CONTRACT DOCUMENTS IN WRITING FOR NOT LESS THAN ONE (1) YEAR FROM DATE OF FINAL NOTICE OF ACCEPTANCE. REPAIR OR REPLACE DEFECTIVE MATERIALS, EQUIPMENT, WORKMANSHIP AND INSTALLATION THAT DEVELOP WITHIN THIS PERIOD, PROMPT AND TO OWNER'S SATISFACTION AND CORRECT DAMAGE CAUSED IN MAKING NECESSARY REPAIRS AND REPLACEMENTS UNDER GUARANTEE WITHIN CONTRACT PRICE.

15. SUBMIT TO THE OWNER AN OFFICIAL CERTIFICATE OF INSURANCE FOR THEIR RECORDS.

MEANS AND METHODS ALL TRADES

1. INSTALL ALL EQUIPMENT AND MATERIALS IN ACCORDANCE WITH MANUFACTURER'S RECOMMENDATIONS

2. DO NOT BURN WASTE MATERIALS. DO NOT BURY DEBRIS OR EXCESS MATERIALS ON THE OWNER'S PROPERTY. DO NOT DISCHARGE VOLATILE, HARMFUL OR DANGEROUS MATERIALS INTO DRAINAGE SYSTEMS. REMOVE AND DISPOSE OF ALL WASTE MATERIALS, PACKAGING MATERIAL, SKIDS ETC. FROM THE SITE AND DISPOSE OF IN A LAWFUL MANNER IN ACCORDANCE WITH MUNICIPAL, STATE AND FEDERAL REGULATIONS.

3. MATERIALS AND EQUIPMENT SHALL BE UL LISTED WHERE STANDARD HAS BEEN ESTABLISHED.

4. CAREFULLY INSPECT ALL BUILDING ELEMENTS PRIOR TO CUTTING OR DRILLING INTO WALL, FLOORS OR CEILINGS. PATCH AND PAINT SURFACES DISTURBED BY WORK UNDER THIS CONTRACT AS REQUIRED TO RESTORE THEM TO THEIR ORIGINAL CONDITION.

5. SCAFFOLDING, RIGGING, HOISTING: THE CONTRACTOR SHALL FURNISH ALL SCAFFOLDING, RIGGING, HOISTING AND SERVICES NECESSARY FOR ERECTION AND DELIVERY INTO THE PREMISES ANY EQUIPMENT AND APPARATUS FURNISHED UNDER THIS DIVISION. REMOVE SAME FROM PREMISES WHEN NO LONGER REQUIRED.

6. EXCAVATION AND BACKFILLING: IT IS THE RESPONSIBILITY OF THE CONTRACTOR TO COORDINATE SIZES, DEPTHS, FILL AND BEDDING REQUIREMENTS AND ANY OTHER EXCAVATION WORK REQUIRED UNDER THESE SPECIFICATIONS

7. WATERPROOFING: WHERE ANY WORK PIERCES WATERPROOFING, INCLUDING WATERPROOF CONCRETE, ROOFS, EXTERIOR WALL AND FLOORS IN WET AREAS, THE METHOD OF INSTALLATION SHALL BE REVIEWED BY THE ENGINEER BEFORE WORK IS DONE. THE CONTRACTOR SHALL FURNISH ALL NECESSARY SLEEVES, CAULKING AND FLASHING REQUIRED TO MAKE OPENINGS ABSOLUTELY WATERTIGHT.

8. PROVIDE FIRESTOPPING AROUND ALL FIRE PROTECTION, PLUMBING, MECHANICAL AND ELECTRICAL PENETRATIONS THROUGH FIRE RATED PARTITIONS. PROVIDE ASBESTOS FREE FIRESTOPPING SYSTEM CAPABLE OF MAINTAINING AN EFFECTIVE BARRIER AGAINST FLAME AND GASES. SYSTEM SHALL BE UL LISTED AND COMPLY WITH ASTM E 814.

9. ACCESS DOORS SHALL BE PROVIDED IN CEILINGS, WALLS AND FLOORS AT ALL DAMPERS, VALVES, CONTROL DEVICES, AND OTHER APPARATUS AND EQUIPMENT REQUIRING PERIODIC SERVICE AND INSPECTION. COORDINATE TYPE AND LOCATION WITH ARCHITECTURAL PLANS.

10. SEISMIC RESTRAINTS SHALL BE INSTALLED AS REQUIRED PER BUILDING CODE AND FIRE SAFETY CODE. RESTRAINTS SHALL BE INSTALLED IN ACCORDANCE WITH NFPA 13 AND SMACNA STANDARDS. SUBMIT SHOP DRAWINGS INCLUDING SEISMIC CALCULATIONS WITH PROFESSIONAL ENGINEER'S SEAL FOR REVIEW BY ENGINEER.

ELECTRICAL SPECIFICATIONS

1. CONTACT THE POWER COMPANY FOR NECESSARY COORDINATION OF SERVICE REQUIREMENTS AND PAY FOR ALL RELATED CHARGES FOR THE SERVICE INSTALLATION. PROVIDE ALL NECESSARY EQUIPMENT, GROUNDING, CONDUITS, WIRE, TRENCHING, SAND AND BACKFILL ETC., FOR THE POWER COMPANY SERVICE CONNECTIONS AND ACTIVATION OF SERVICE FOR THE PROJECT. ALL EQUIPMENT SHALL MEET THE POWER COMPANIES REQUIREMENTS AND SHALL BE SUBMITTED TO THE POWER COMPANY PRIOR TO ORDERING OR INSTALLATION.

2. CONTACT THE TELEPHONE COMPANY FOR NECESSARY COORDINATION OF SERVICE REQUIREMENTS AND PAY FOR ALL RELATED CHARGES FOR THE SERVICE INSTALLATION. PROVIDE ALL BOXES, TERMINATIONS, CONDUITS AND WIRING PER DRAWINGS.

3. CONTACT THE CABLE TELEVISION COMPANY FOR NECESSARY COORDINATION OF SERVICE REQUIREMENTS AND PAY FOR ALL RELATED CHARGES FOR THE SERVICE INSTALLATION. PROVIDE ALL BOXES, TERMINATION, CONDUITS AND WIRING PER DRAWINGS.

4. SERVICE-DISCONNECTING MEANS SHALL BE OF THE TYPE AS INDICATED WITH EXTERNAL HANDLE FOR MANUAL OPERATION. WHEN SERVICE DISCONNECTING MEANS IS A PART OF AN ASSEMBLY, THE ASSEMBLY SHALL BE LISTED AS SUITABLE FOR SERVICE ENTRANCE EQUIPMENT. ENCLOSURES SHALL BE SHEET METAL WITH HINGED COVER FOR SURFACE MOUNTING UNLESS OTHERWISE INDICATED.

5. PANELBOARD/LOAD CENTER:

   A. PROVIDE CIRCUIT BREAKER TYPE PANELBOARD/LOAD CENTER WITH BUS RATING AS INDICATED ON DRAWINGS.

   B. MINIMUM INTEGRATED SHORT CIRCUIT RATING: 10,000A RMS SYMMETRICAL.

   C. MOLDED CASE CIRCUIT BREAKER: NEMA AB, PLUG ON TYPE THERMAL MAGNETIC TRIP CIRCUIT BREAKERS, WITH COMMON TRIP HANDLES PER POLES, LISTED AS TYPE SWD FOR LIGHTING CIRCUITS, CLASS A GROUND FAULT INTERRUPTER CIRCUIT BREAKER AS INDICATED ON DRAWINGS, ARC-FAULT CIRCUIT INTERRUPTER TYPE CIRCUIT BREAKERS AS INDICATED ON DRAWINGS.

   D. ENCLOSURE: GENERAL PURPOSE.

   E. BOX: FLUSH TYPE WITH DOOR AND PULL RING LATCH, FINISH IN MANUFACTURER STANDARD GRAY ENAMEL.

6. MOUNT PANELBOARDS, CIRCUIT BREAKERS, AND DISCONNECTING SWITCHES SO HEIGHT OF OPERATING HANDLE AT ITS HIGHEST POSITION IS MAXIMUM 78 INCHES ABOVE FLOOR.

7. ALL BACKBOARDS SHALL UTILIZE FIRE RETARDANT 3/4 INCH PLYWOOD, SIZED AS INDICATED ON THE DRAWINGS.

8. GROUNDING SHALL BE COMPLETED IN ACCORDANCE WITH NFPA 70.

   A. GROUND EXPOSED, NON-CURRENT-CARRYING METALLIC PARTS OF ELECTRICAL EQUIPMENT, GROUNDING CONDUCTOR IN NONMETALLIC RACEWAYS, GROUNDING CONDUCTOR OF NONMETALLIC SHEATHED CABLES, AND NEUTRAL CONDUCTOR OF WIRING SYSTEMS.

   B. MAKE GROUND CONNECTION AT MAIN SERVICE EQUIPMENT, AND EXTEND GROUNDING CONDUCTOR TO POINT OF ENTRANCE OF METALLIC WATER SERVICE. MAKE CONNECTION TO WATER PIPE BY SUITABLE GROUND CLAMP WITH METER JUMPER OR LUG CONNECTION TO PLUGGED TEE. IF FLANGED PIPES ARE ENCOUNTERED, MAKE CONNECTION WITH LUG BOLTED TO STREET SIDE OF FLANGED CONNECTION. SUPPLEMENT METALLIC WATER SERVICE GROUNDING SYSTEM WITH ADDITIONAL MADE ELECTRODE IN COMPLIANCE WITH NFPA 70. MAKE GROUND CONNECTION TO DRIVEN GROUND RODS ON EXTERIOR OF BUILDING. GROUND RODS SHALL BE OF COPPER-CLAD STEEL CONFORMING TO UL 467 NOT LESS THAN 19.1 MM (3/4 INCH) IN DIAMETER BY 2.4 METER (8 FEET) IN LENGTH OF THE SECTIONAL TYPE DRIVEN FULL LENGTH INTO THE EARTH WHERE GROUND FAULT PROTECTION IS EMPLOYED, ENSURE THAT CONNECTION OF GROUND AND NEUTRAL DOES NOT INTERFERE WITH CORRECT OPERATION OF FAULT PROTECTION.

8. WIRING SHALL BE COMPLETED IN ACCORDANCE WITH NFPA 70.

   A. CONDUCTORS NO. 8 AWG AND LARGER DIAMETER SHALL BE STRANDED ANNEALED COPPER. CONDUCTORS NO. 10 AWG AND SMALLER DIAMETER SHALL BE SOLID ANNEALED COPPER. CONDUCTOR SIZES AND AMPACITIES SHOWN ARE BASED ON COPPER, UNLESS INDICATED OTHERWISE. UNLESS SPECIFIED OR INDICATED OTHERWISE OR REQUIRED BY NFPA 70. UNLESS OTHERWISE INDICTED WIRING METHODS SHALL BE:

      a. SERVICE ENTRANCE WIRING AND WIRING TO DISTRIBUTION PANELS. WIRES SHALL BE IN PVC CONDUIT AND SHALL BE 600-VOLT, TYPE THWN/THHN ANNEALED COPPER.

      b. BRANCH CIRCUITING INSIDE THE BUILDING IN DRY AREAS SHALL BE 600 VOLT, TYPE NM-B.

      c. BRANCH CIRCUITING OUTSIDE THE BUILDING AND IN WET/DAMP AREAS SHALL BE 600 VOLT, TYPE UF-B.

      d. WIRES SUBJECT TO DAMAGE SHALL BE IN PVC CONDUIT.

   B. MAKE ALL SPLICES IN ACCESSIBLE LOCATIONS. MAKE SPLICES IN CONDUCTORS NO. 10 AWG AND SMALLER DIAMETER WITH INSULATED, PRESSURE-TYPE CONNECTOR. MAKE SPLICES IN CONDUCTORS NO. 8 AWG AND LARGER DIAMETER WITH SOLDERLESS CONNECTOR, AND COVER WITH INSULATION MATERIAL EQUIVALENT TO CONDUCTOR INSULATION.

   C. PHASE CONDUCTORS SHALL BE IDENTIFIED BY COLOR CODING. THE COLOR OF THE INSULATION ON PHASES A AND B RESPECTIVELY (FOR SINGLE PHASE) OF DIFFERENT VOLTAGE SYSTEMS SHALL BE AS FOLLOWS: 120/240 VOLT, SINGLE/PHASE: BLACK AND RED.

9. BOXES:

   A. ALL OUTLETS, SWITCH AND JUNCTION BOXES SHALL BE NONMETALLIC BOXES.

   B. BOXES SHALL BE SIZED IN ACCORDANCE WITH NFPA 70.

   C. EXTERIOR BOXES SHALL BE GASKETED AND WATERTIGHT.

10. OUTLETS AND SWITCHES:

   A. ALL OUTLETS AND SWITCHES SHALL BE WHITE.

   B. MOUNT LIGHTING SWITCHES 48 INCHES ABOVE FINISHED FLOOR, RECEPTACLES 18 INCHES ABOVE FINISHED FLOOR, AND OTHER DEVICES AS INDICATED. MEASURE MOUNTING HEIGHTS OF WIRING DEVICES AND OUTLETS TO TOP OF DEVICE OR OUTLET.

   C. SINGLE AND DUPLEX RECEPTACLES SHALL BE RATED 15 AMPERES, 125 VOLTS, TWO-POLE, THREE-WIRE, GROUNDING TYPE WITH POLARIZED PARALLEL SLOTS. RECEPTACLE SHALL BE SIDE OR BACK WIRED WITH TWO SCREWS PER TERMINAL. THE THIRD GROUNDING POLE SHALL BE CONNECTED TO THE METAL MOUNTING YOKE.

      a. SWITCHED RECEPTACLES SHALL BE THE SAME AS OTHER RECEPTACLES SPECIFIED EXCEPT THAT THE UNGROUNDED POLE OF EACH SUITABLE RECEPTACLE SHALL BE PROVIDED WITH A SEPARATE TERMINAL. ONLY THE TOP RECEPTACLE OF A DUPLEX RECEPTACLE SHALL BE WIRED FOR SWITCHING APPLICATION.

   C. RECEPTACLES WITH GROUND FAULT CIRCUIT INTERRUPTERS SHALL HAVE THE CURRENT RATING AS INDICATED, AND SHALL BE UL CLASS A TYPE UNLESS OTHERWISE SHOWN. GROUND FAULT CIRCUIT PROTECTION SHALL BE PROVIDED AS REQUIRED BY NFPA 70 AND AS INDICATED ON THE DRAWINGS.

   D. WEATHERPROOF RECEPTACLES SHOWN SHALL BE MOUNTED IN A BOX WITH A GASKETED, WEATHERPROOF, WATERPROOF COVER PLATE AND GASKETED CAP OVER EACH RECEPTACLE OPENING.

   E. WALL SWITCHES SHALL BE OF THE TOTALLY ENCLOSED TUMBLER TYPE. WIRING TERMINALS SHALL BE OF THE SCREW TYPE OR OF SOLDERLESS PRESSURE TYPE HAVING SUITABLE CONDUCTOR-RELEASE ARRANGEMENT. SWITCHES SHALL BE RATED 15 AMPERE 120/277-VOLT FOR USE ON ALTERNATING CURRENT ONLY.

   F. DEVICE PLATES SHALL BE ONE-PIECE TYPE AND BE PROVIDED FOR ALL RECEPTACLES, OUTLETS, SWITCHES AND FITTINGS. PLATES ON UNFINISHED WALLS AND ON FITTINGS SHALL BE OF IMPACT RESISTANT PLASTIC HAVING ROUNDED OR BEVELED EDGES. PLATES ON FINISHED WALLS SHALL BE IMPACT-RESISTANT PLASTIC. PLATES SHALL BE INSTALLED WITH ALL FOUR EDGES IN CONTINUOUS CONTACT WITH FINISHED WALL SURFACES WITHOUT THE USE OF MATS OR SIMILAR DEVICES. PLATES SHALL BE INSTALLED WITH AN ALIGNMENT TOLERANCE OF 1/16 INCH. THE USE OF SECTIONAL-TYPE DEVICE PLATES WILL NOT BE PERMITTED. PLATES INSTALLED IN WET LOCATIONS SHALL BE GASKETED AND PROVIDED WITH A HINGED, GASKETED COVER, UNLESS OTHERWISE SPECIFIED.

11. PROVIDE ALL NECESSARY JUNCTION BOXES, PULL BOXES, PULL WIRES, COVER PLATES AND OTHER MISCELLANEOUS EQUIPMENT WHICH IS NOT SHOWN ON THE CONTRACT DOCUMENTS BUT NECESSARY TO COMPLETE THE WORK.

12. PROVIDE ALL NECESSARY WIRE, CONDUIT AND EQUIPMENT TO SUPPLY POWER TO THE HEATING, VENTILATION AND AIR CONDITIONING EQUIPMENT, PLUMBING EQUIPMENT AND FIRE PROTECTION EQUIPMENT. CONTROL WIRING AND CONDUIT SHALL BE PROVIDED UNDER DIVISION 15.

13. COORDINATE ALL WORK WITH OTHER TRADES AND ARRANGE INSTALLATION TO AVOID CLASHES BETWEEN EQUIPMENT, WORK OF OTHER TRADES AND BUILDING STRUCTURE.

CAPITAL STUDIO
architects LLC
1379 MAIN STREET EAST HARTFORD CT. 06108
860.289.3262 fax 860.289.3163

THE STATE OF CONNECTICUT DEPARTMENT OF HOUSING (DOH) COMMUNITY DEVELOPMENT BLOCK GRANT - DISASTER RECOVERY (CDBG-DR) DOH OCCUPIED REHABILITATION and REBUILDING PROGRAM (OORR)

CARLSON RESIDENCE
APPLICATION No. 1939
39 ATTAWAN AVENUE
NIANTIC, CT 06357

CES
Consulting Engineering Services, Inc.
511 Middle Street
Middletown, CT 06457
Tel.(860) 632-1682
Fax.(860) 632-1758
CES #2014064.00

date	description	no.

revisions

ELECTRICAL SPECIFICATIONS

E-5.1

date	JUNE 19, 2015
drawn	VCM
scale	AS SHOWN
checked	DTB
project no.	2014064.00
application no.	1939