OUTLINE SPECIFICATION

Held Residence
159 Hillside Avenue
Milford, CT 06460

Proposed Residence

DIVISION 1: GENERAL REQUIREMENTS

1. Zoning:
City of Milford
Milford, CT

Zoning: Variance approved September 10, 2013. Special Permit and CAM approved December 3, 2013.

2. Basic Building Code: 2003 International Residential Code, Portion of the 2005 State Building Code + Supplements, 2009 Amendments.

3. All Bidders are obligated to inspect the site and acquaint themselves with conditions as they actually exist, the intent and nature of the work and the matters affecting its performance. No allowance will be made on behalf of any Contractor for negligence on his part.

4. All work to be in accordance with all Federal, State, and local codes and agencies, having jurisdiction.

5. The Contractor shall secure and pay for all permits as required. The Contractor will be responsible for obtaining all approvals and for coordinating all inspections.

6. The Contractor is responsible for notifying the Architect immediately in writing of any discrepancies, non-conformities or omissions in plans and to bear all costs arising from rectifying work knowingly performed contrary to code requirements or best accepted construction practices.

7. The Contractor shall furnish all labor, equipment and materials necessary to complete all work in accordance with best accepted construction practices and in strict accordance with all manufacturers' recommended specifications. Temporary heat, if required, by Contractor. Contractor to provide temporary power and water until such time the permanent utilities are provided. Owner to pay for their use. Contractor to provide for his own site office, toilet facilities and telephone.

8. The Contractor is solely responsible for all bracing, shoring, enclosures, barriers, scaffolding, etc. as required to provide a safe working environment as dictated by the progress of work. Property or equipment belonging to the Owner is to be protected throughout the term of work. The Contractor is responsible for the demolition and removal of the existing residence and all related structures or work.

9. The Contractor shall guarantee all work performed under this contract will be free from defects of materials and workmanship for a period of one (1) year from the date of final acceptance. This includes all HVAC work, regardless of its date of installation and start-up. The Contractor will bear all costs to rectify all defects and damage reported in writing within the guarantee period. The Contractor shall furnish the Owner with all manufacturers' written guarantees for periods lasting for more than one year.

10. The Contractor shall lay out all work and establish all points, lines and levels and assume responsibility for same. Include in bid all surveying fees required for initial layout, pile locations, establishing elevations and final Flood Elevation Certificate.

11. Any request for the use of an alternate material or item other than as specified in the documents must be placed in writing and reviewed before any substitution is made.

12. Rubbish removal and cleaning up shall be done each day as a result of any work, removing all debris from the site upon completion. Prior to final acceptance, the Contractor shall leave the work dust free, vacumed/waxed/polished, taking care to do all special cleaning of windows, flooring, hardware, fixtures, etc. for the Owner's approval. All voids in work prior to enclosure must be cleaned of all dust, dirt and debris. Burning waste material on site is not permitted.

13. The Contractor shall maintain insurance for possible claims made under Workers' Compensation Acts; bodily injury and property damage in amounts not less than warranted by the Contract. The Contractor shall name the Architect and Sub-Consultants as additional insureds on the General Contractor's general liability policy. Certificates of insurance, including Subcontractors' shall be submitted to the Architect and Owner. The Owner is to consult his insurance agent regarding types and amounts of insurance, which may be required.

14. The "General Conditions of the Contract for the Construction of Buildings," AIA Document A201, latest edition, is to be included as part of this contract governing all items not specifically covered herein. Copies of these are available for inspection at the office of the Architect.

15. Questions regarding the drawings and specifications are to be directed to the Architect.

16. Contractor is responsible for the coordination and completion of all temporary shutoffs and hook-ups etc. as required. Contractor is responsible for protecting existing driveway and all structures and features which are to remain.

17. Requests for payment shall be made by submitting AIA Document G-702 and G-703 monthly, in triplicate.

18. Separate Contracts:

A. Built-in Cabinetry: by Millwork Subcontractor, unless otherwise noted on drawings. Kitchen cabinets, countertops, bath vanities and countertops, laundry cabinets and countertops, built-ins, etc. by Millwork Subcontractor. General Contractor is to coordinate with Millwork Subcontractor. General Contractor is responsible for all rough-in, venting and final hook-up of all appliances and plumbing.

B. Security System/Fire Alarm System: by Security Consultant, General Contractor to coordinate with Consultant. See Division 16, Item 10.

C. Closet Consultant: General Contractor to coordinate with Owner and Consultant.

D. Stereo: General Contractor to coordinate with Owner and Consultant.

19. No smoking within any interior portion of this project. Contractor to post "No Smoking" signs. Minimum of four. Smoking is permitted outside at a designated area, which is to be established with the Owner. General Contractor to provide proper container for disposal of cigarettes, etc. No radio playing to be allowed on the construction site without the permission of the Owner. No more than one radio to be playing at one time, if permission is granted by Owner. Volume to be kept to a minimum.

20. Bids are to be submitted to the office of the Architect. Contractor to submit a Schedule of Values with their Bid along with commencement and completion dates and a list of Subcontractors. Contractor to list allowance figures in Bid. This will be known as the base bid except for those items specifically excluded.

DIVISION 1: GENERAL REQUIREMENTS Continue...

21. Asbestos: prior to demolition, survey the existing residence for asbestos/ lead paint. If asbestos containing material and/or lead paint are encountered, removal of asbestos containing material and lead paint shall be done in accordance with all federal, state and local government regulations. Should asbestos containing materials (i.e. VAT) be discovered, Contractor to provide separate proposal to Owner and Architect covering its legal removal prior to commencement of work.

A. The Architect hereby states, and the Owner and Contractor acknowledges, the Architect has no professional liability (errors and omissions) or other insurance, and is unable to reasonably obtain such insurance, for claims arising out of:

1. The specification or installation of any materials or product or process containing asbestos; or

2. the transportation, storage or disposal of any material or product containing asbestos; or

3. Any personal injury, bodily injury, physical or mental illness or disease, cased in whole or party by exposure to asbestos or a product, material or process containing asbestos.

Accordingly, the Owner and Contractor hereby agree to bring no claim for negligence, breach of contract, indemnity or otherwise against the Architect, his principals, employees, agents and consultants if such a claim in any way would involve the Architect's services for the remedial work related to asbestos in the Project.

DIVISION 2: SITE CONSTRUCTION

1. Layout residence before work is begun. Site use is limited to the area as defined by the Contract Limit Line (which is the property line). Install erosion control; wind borne debris fencing, etc. as required. See site development plan. Excavate for foundation as shown (see structural documents). Rough grade to finished elevation as shown on Drawings. Spread existing topsoil and rake to remove stones. Excess material to be removed from site. Demolish and remove existing residence and structures (shed). Demolition includes terminating existing sewer, water, gas and electric. See Structural drawings, boring log and geo-technical report for additional information.

2. Plantings/Trees, which are not to be saved, are to be removed by Contractor. Care is to be taken for all surrounding trees, plantings, etc. Review with Owner/Landscape Architect which trees are to remain. Coordinate landscape design with Landscape Architect.

3. Provide for re-connection to sewer, gas and water. Electric service shall be underground. Protect all areas from dumpsters, trucks, material, etc.

4. Bottom of all foundation structures (grade beams/pile caps, piers) as per structural documents. Review and confirm field conditions with Architect and Structural Engineer.

5. Bottom of all foundation structures to be a minimum of 3'-6" below finished grade, unless otherwise noted.

6. Bottom of foundation structures shown are assumed elevations. Actual field conditions as found shall govern.

7. Prior to placing forms for foundation structures, the soil at the proposed elevations must be reviewed by the Architect/Structural Engineer. Foundation structures shall not be placed on frozen soil.

8. Where grade beams are to have backfill on both sides, backfill both sides simultaneously up to the lower level of backfill, unless otherwise noted on the Drawings.

9. In the event any part of the earth excavation is carried, through error, beyond the depth and dimensions indicated on the Drawings or called for in the Specifications, then the Contractor shall furnish and install gravel or stone with which to fill to the required level. However, if this condition arises under a foundation structures, then the fill shall be compacted to 95% of optimum density.

10. If rock or sub-surface water is encountered, Owner and Contractor shall negotiate a price before work is done. Where rock is encountered and this rock must be removed in order to install foundation structures, the Contractor shall be paid an additional sum for such rock removal Any rock which cannot be removed except by blasting or drilling shall be considered "rock." Before such rock is removed, it shall be exposed and the Architect shall have a chance to measure. If not, it will not be paid for.

11. Correction of Work: Correct any settlement which occurs within one year after completion at no expense to the Owner. Remove and replace any structure.

12. Seeding and Planting: Spread existing topsoil and/or provide topsoil as required at disturbed areas to finished grade. Topsoil to be raked, stones to be removed. Finished grade to slope away from building with positive pitch for drainage as per site drawings. Blend with existing grade. Seeding and planting by Owner.

13. General Contractor is responsible for the coordination with utility companies.

14. Install erosion and sedimentation control measures as per notes on Site Development Plan and as may be required by local authorities.

15. General Contractor responsible for installing all utilities and final connections.

DIVISION 3: CONCRETE

1. The work required under this Section shall include all labor, materials and equipment necessary to complete all cast-in-place concrete work shown on the drawings or as specified.

2. Anchors, reinforcing, sleeves, inserts and other items furnished under other divisions and required to be cast in concrete shall be accurately positioned.

3. All work shall be performed to secure for the entire job a homogeneous concrete having required strength, durability and to be free from honeycomb, planes or weakness, or other structural defects.

4. Formwork Reinforcement:

A. All concrete shall be formed with plywood and coated with a non-petroleum based form-release agent. Form liner for exposed concrete piers shall be: Pattern #16421, cedar plank, as manufactured by Fitzgerald, 1500 East Chestnut Avenue, Santa Ana, CA.

5. Concrete:

A. Foundation structures shall be carried to the elevations indicated to conform with structural drawings.

B. The finish excavation for the foundation shall be neat and true to line.

C. Foundation excavations shall be kept free of loose material and standing water.

D. All concrete shall be placed on undisturbed earth. All and any deleterious materials shall be removed before placing any concrete.

DIVISION 3: CONCRETE Continue...

E. No footings or foundations shall be placed in water or on frozen ground.

6. All concrete work shall be in compliance with the 2003 International Residential Code, Portion of the 2005 State Building Code + Supplements, 2009 Amendments.

A. Cement shall conform to ASTM C150, Type II.

B. Aggregates for normal weight concrete shall conform to ASTM C33.

C. Ready-mix concrete shall be mixed and delivered in accordance with ASTM

D. All concrete shall have a minimum 28 day compressive strength of 4000 psi.

E. The concrete shall be placed with a maximum 4" slump and shall be vibrated workman like manner.

F. Exterior concrete shall be air entrained concrete, containing 6% entrained air.

G. Admixtures may be used with prior approval of the Structural Engineer. Admixtures shall comply with ASTM C494.

H. The concrete shall be mixed, placed and cured without the use of calcium chloride. The placement of all concrete shall comply with the latest American Concrete Institute (ACI) codes, including ACI 306.1-88 "Cold Weather Concreting" ACI 305R -91 "Hot Weather Concreting".

J. The concrete shall have attained at least fifty percent (50 %) of its 28 day compressive strength prior to the removal of the forms.

8. Exposed concrete surfaces- Provide finish for all exposed concrete with form liner pattern. Remove fins, rough spots, mortar and other projections.

9. See Structural drawings for additional information and specifications.

DIVISION 4: MASONRY

DIVISION 5: METALS

1. See Structural drawings for additional information and specifications.

2. Provide miscellaneous metals as required. "Ever-Flash" at all decks where decking intersects residence.

3. Provide joist hangers as required. Exposed hangers shall be Simpson stainless steel.

4.: A. Provide Hurricane Clips as manufactured by Simpson Strong-Tie, at all roof rafters.

B. Provide Hold-Downs Metal Strapping as required by code by Simpson Strong Tie at first floor to second floor, wall openings, etc. All work to comply with 110 mph wind zone requirements. Provide 'H' clips at roof sheathing.

5. Connections shall have a minimum of two bolt rows.

6. Shop connections shall be welded or high strength bolts.

7. Connections and seat stiffeners shall clear architectural finishes.

8. Provide heavy HEX nuts and washers (3'x3'x1/4") at all anchor bolts.

9. All structure is designed to be self-supporting and stable after the building is fully completed. It is the Subcontractor's sole responsibility to determine erection procedure and sequence, and to ensure the safety of the building.

10. The Subcontractor shall provide pour stops, cell closures, and all other accessories required for a complete installation.

11. Bolt holes shall be punched or drilled. Flame cut holes are not acceptable.

12. Install beams with natural camber up.

13. Level and plumb individual members of the structure to an accuracy of 1:500.

14. Commencement of structural steel work without notifying Architect of any discrepancies will be considered acceptance of preceding work.

DIVISION 6: CARPENTRY

1. Design Loads: See Structural drawings for additional information and specifications.

2. Rough Framing: Framing to follow all sound construction procedures and all code requirements. Provide all required nails, rough hardware, blocking, etc., for a rigid and permanent installation. Maximum moisture content 19%. All wood in contact with concrete and as called for on drawings, to be pressure treated southern yellow pine.

3. Studs, partitions, sills plates, sleepers: Douglas fir, standard grade.

4. Roof rafters, headers and ceiling joists: See Structural drawings Pre-engineered lumber: TJI as manufactured by Weyerhauser/ I-LEVEL. No substitutions. See Drawings. Provide shop drawings for all engineered lumber, including I-joists.

5. Girders and beams: See Structural drawings. See header schedule

6. Wall Sheathing: 1/2" CDX plywood with 15# building felt.

7. Roof Sheathing: 5/8" CDX plywood with 15# roofing felt and Ice & Watershield. See Drawings.

8. Subfloor: 3/4" T&G plywood. Finish floor: 1/2" and 3/4" PTS underlayment or as noted on schedule.

9. Bridging:
A. 1 x 3 spruce. Bridging to be at center line of joist space, maximum spacing 8'-0" o.c. Required at conventional framing only or as noted on structural drawings.

10. Interior window and door casing, sills and base: Poplar, Paint grade. (Note: All interior moldings by Interstate Lumber unless otherwise noted.)

A. No splicing. All corners to be mitered / coped.

B. Casing - IL 217

C. Apron - IL 255

D. Base - IL 120

E. Stool cap - similar to Brosco # 1280

11. Exterior moulding:

DIVISION 6: CARPENTRY continue...

A. Casing - 5/4x4 Azek

B. Apron - 5/4 X 3 Azek

C. Sill - Azek- Historic sill

D. Pilasters - See details (Azek moldings)

E. Lattice - 5/4x5/4 Azek

F. Dentil Blocks - Fypon #DTLB 6X4X6

G. Crown molding: Liberty Cedar # DO-021

H. Columns: 10" Tuscan tapered round with capital (no base) as manufactured by Polycast.

12. Exterior railings:

A. Front entry stair and porch - Azek Premier series. Color to be selected. Install as per manufacturer's specifications and complete in all respects.

B. Rear decks: Grandview railing system as manufactured by Fairway. Install as per manufacturer's specifications. Provide composite post cap and post trim ring. Installation shall be complete in all respects.

13. Miscellaneous Products:

A. Air-Infiltration Barrier: ASTM D 226, Type I, No. 15 asphalt felt, unperforated.

B. Fasteners: Industry standard. Where rough carpentry is exposed to weather, in ground contact, or in area of high relative humidity, provide fasteners with a hot-dip zinc coating per ASTM A 153 or of Type 304 stainless steel.

1. Power-driven Fasteners: (CABO) NER-272.

2. Bolts: Steel bolts complying with ASTM A 307, grade A (ASTM F 568, Property Class 4.6); with ASTM A 563 (ASTM A 563M) hex nuts and, where indicated, flat washers.

C. Metal Framing Anchors: Hot-dip galvanized steel of structural capacity, type and size indicated.

D. Framing Contractor to review Lighting Plans to avoid conflicts between framing and fixture, switch or outlet locations.

E. Joist hangers, rafter hangers, post base, hurricane clips strapping, etc. as noted/required, as manufactured by Simpson Strong-Tie Connectors.

14. Installation:

A. Fit rough carpentry to other construction; scribe and cope for accurate fit. Correlate location of furring, blocking, and similar supports to allow attachment of other construction. Coordinate with Mechanical and Electrical Plans to avoid conflict between framing and fixture, outlet, switch, etc. locations.

B. Securely attach rough carpentry work to substrate by anchoring and fastening per industry standard and the Wood Framing Construction Manual or as dictated by the Building Code.

C. Provide jack and king studs at all headers and beams. Carry concentrated loads of all jack studs down to suitable bearing. Double frame all openings. Double joists under all parallel partitions. See Header Schedule.

D. Provide headers above all openings as designated on Drawings and header schedule, unless otherwise noted.

E. Provide headers at all showers. Co-ordinate with tile layout.

15. Finish Carpentry:

A. Trim - 1x & 5/4x clear cedar. See details.

1. Siding:

a. Hardi-Plank Cement-fiber reinforced clapboards-, factory pre-primed and painted, and installed at approximately 4"± to the weather (base siding) and 6"± to the weather (gables).

b. 1x6 Cedar square edge shiplap siding (smooth side out) with 1/4" reveal A or better.

2. Soffit: Exterior-Azek, bead board 5/8" x 4", installed on 1/2" CDX plywood. See Details. Bead board installed perpendicular to wall.

3. Fish Scale Shingles - Maybeck, white cedar, square edge, re-butted, pre-primed.

B. Interior Stair Railing: as manufactured by Crown Heritage (provide shop drawings):

1. Handrail: #6210

2. Balusters: #5360 Primed

3. Newel Post: #4904

4. Skirt bracket: #7028

C. Stair:

1. Wood Species for Transparent Finish: White Oak, plain sawn. Provide sample for review.

2. Wood Species for Opaque Finish: Pine.

3. Finishes for Stair Parts: Treads transparent, risers opaque, stringers opaque, handrails transparent, scotia cove and other mouldings opaque.

D. Shelving and Closet Poles:

1. 3/4" birch veneer plywood with 1 x 2 pine edge band.

2. Closet Pole: 1-1/3" diameter steel tubing, polished chrome finish with polished chrome flanges, as manufactured by Outwater Hardware Corp., Totowa, NJ.

16. Decking - Ipe, 5/4x4 and 5/4x3, pre-kerfed. Install utilizing the Ipe clip system. Provide boarder at entire installation.

CONFIDENTIAL
PROPRIETARY INFORMATION

THE INFORMATION HEREIN IS OF A PROPRIETARY NATURE AND IS SUBMITTED IN CONFIDENCE FOR USE BY OUR CLIENTS ONLY. UNAUTHORIZED REPRODUCTION, PUBLICATION, DISTRIBUTION OR DISSEMINATION, IN WHOLE OR IN PART, IS EXPRESSEDLY PROHIBITED. THE INFORMATION CONTAINED HEREIN IS AND REMAINS THE PROPERTY OF W. S. GARRICK ARCHITECTS, AND RECEIPT OR POSSESSION OF THIS INFORMATION CONFERS NO RIGHT IN OR LICENSE TO USE OR TO DISCLOSE TO OTHERS THE SUBJECT MATTER CONTAINED HEREIN FOR ANY BUT AUTHORIZED PURPOSES. ALL RIGHTS RESERVED.

DRAWING LIST

A.1a	OUTLINE SPECIFICATION
A.1b	OUTLINE SPECIFICATION
A.2a	SURVEY
A.2b	SITE DEVELOPMENT PLAN
A.2c	SITE CONSTRUCTION NOTES AND DETAILS
A.2	GROUND FLOOR AND ROOF PLANS
A.3	FIRST AND SECOND FLOOR PLANS
A.4	NORTH AND WEST ELEVATIONS
A.5	SOUTH AND EAST ELEVATIONS
A.6	BUILDING SECTIONS
A.7	BUILDING SECTION
A.8	DETAILS
A.9	DETAILS
A.10	WINDOW AND DOOR SCHEDULES
A.11	FINISH AND LIGHTING SCHEDULES
A.12	GROUND FLOOR LIGHTING PLAN
A.13	FIRST AND SECOND FLOOR LIGHTING PLANS
S.1	FOUNDATION PLAN AND DETAILS
S.2	FIRST FLOOR FRAMING PLAN
S.3	SECOND FLOOR FRAMING PLAN
S.4	ROOF FRAMING PLAN

FOR BUILDING PERMIT

Wayne S. Garrick A.I.A. Architects
891 Whitney Avenue New Haven, Connecticut 06511
203 - 776 - 1874 fax 203 - 776 - 8002

Revisions:
12.30.13
5.8.14

Project Number: 1301
Scale: AS NOTED
Date: 05.07.2013
Drawn By: ZK
Checked By: WSG

HELD
159 HILLSIDE AVENUE MILFORD CT

A.1a

17. Installation:

A. Condition woodwork to prevailing conditions before installation.

B. Install woodwork to comply with AWI Section 1700 for grade specified.

C. Install woodwork level, plumb, true, and straight. Shim as required with concealed shims. Install to a tolerance of 1/8 inch in 96 inches (3 mm in 2400 mm) for level and plumb.

D. Scribe and cut woodwork to fit adjoining work, seal cut surfaces, and repair damaged finish at cuts.

E. Install trim with minimum number of joints possible, using full-length pieces to the greatest extent possible. Stagger joints in adjacent and related members. Minimum length - 16'-0". If longer (I.E. 20'-0" - divide into two equal lengths.)

F. Stairwork and Rails: Cut carriages to accurately fit treads and risers and securely anchor to supporting substrates. Glue treads to risers, and glue and nail treads and risers to carriages. Glue and wedge treads and risers to housed stringers. Glue and dowel or pin balusters to treads and railings and railings to newel posts. Bevel top edge of stringer.

G. No splicing. All corners to be mitered/coped.

H. Backout or groove backs of flat trim members, kerf backs of other wide, flat members, except for members with ends exposed in finished work.

DIVISION 7: THERMAL AND MOISTURE PROTECTION

1. Aluminum roll and step flashing, minimum exposure.

2. A. Fiberglass high density insulation; Owens - Corning -

Walls: 5-1/2" R-21, unfaced.

Sloped Rafter: 8-1/4" R-30, unfaced,

Ceilings: 12" R-38, unfaced.

Provide insulation baffles as may be required.

Floors: a. First Floor: 8" closed cell foam insulation - Icynene.

b. Second Floor: 8-1/4" R-30, unfaced.

Sound insulation: Insulate all interior walls at Bedrooms and Baths with 3 1/2" (2x4) and 5 1/2" (2x6) unfaced batt insulation.

B. Vapor Barrier: Provide continuous 6 mil polyethylene vapor barrier on interior side of all exterior wall and ceiling insulation (except @ floors).

3. Ductwork: Wrap with 2" fiberglass insulation with integral vapor barrier. Hot and cold water piping: 2" pipe insulation (copper only).

4. Roofing:

A. Sloped:

1. Shingles: Fiberglass, 50 year, architectural shingles. Certainteed. Provide samples for review. Install over 15# building felt. Provide "Ice and Watershield" membrane continuously at all eaves (48" vertically), and at hips, valleys, and breaks in roof line (36" in each direction).
- Install as per manufacturer's recommendations and specifications, W.R. Grace Co.
- No substitutions.

2. Standing seam roof: 16 oz. red copper.

5. Sealant: Dow 790 to match.

6. Vents:

A. Soffit Vent: 2" aluminum soffit vent. Install per manufacturer's specifications. Factory finish, color to be selected. By Air-Vent, Inc.

B. Drip Flashing: Aluminum. Color to be selected. See Division 6., 17e for guide on length installation. Copper drip at copper standing seam roof(s).

C. Ridge Vents: Filter vent and Flash Filter-vent, as manufactured by Air Vent, Inc. Install per manufacturer's recommendations.

7. Gutters and leaders - Box style Englert Rain-Pro gutters and leaders. Concealed fasteners for gutter, stand-offs for leaders. See drawings for locations.

DIVISION 8: DOORS AND WINDOWS

1. Exterior Doors:

A. Clad, hinged French doors and sliding glass doors, as manufactured by Andersen Windows & Doors, Bayport, MN. Provide shop drawings for review by Architect prior to fabrication. See Door Schedule.

B. Thresholds: Factory standard or as noted.

C. Solid exterior doors. See Schedule.

2. Interior Doors: See Door Schedule

A. Two panel door, Masonite.

B. Attic access stair: Brosco - Imperial with thermo-guard.

3. Windows:

A. Casement, double-hung and picture units as manufactured by Andersen Windows & Doors, Bayport, MN. See Window Schedule. Provide shop drawings for review by Architect prior to fabrication. All glazing to be impact resistant for storm protection as per code. All operating hardware to be corrosion resistant.

4. Finish Door Hardware: Provide an allowance of $100./door. Labor to install in bid. Owner to select finish:

A. Locksets: To be keyed alike.

B. Door Stops: Base, door and hinge door stops as manufactured by Emtek, New Haven, CT. Owner to select type and finish.

DIVISION 9: FINISHES

1. Walls: See Finish Schedule for location of wall finish. Provide all necessary accessories for complete installation. Prepare surface for specified finish.

A. 1/2" Gypsum wallboard, 5/8" F.C. moisture resistant gypsum wallboard, 1/2" moisture resistant gypsum wallboard and 1/2" cement board by Gold Bond. Three coats taping compound.

B. Ceramic Tile: Provide an allowance of $16./sf. Labor and material. Submit product data and sample for review. Allowance for basic tile layout. Indicate material/labor breakdown.

DIVISION 9: FINISHES continue ...

2. Execution:

A. All work to be done by skilled mechanics.

B. Work to be flush, smooth, free from pits, scars, etc.

C. The Contractor shall inspect all areas affected by his work to ascertain all work is complete which will be concealed by gypsum board.

D. Start up of work means acceptance of conditions.

3. Flooring: See Finish Schedule for finish floor. Provide an allowance based on the following values. Values are for labor to install and materials. Indicate installation cost and total square footages in Bid:

A. Wood: $10./sf

B. Ceramic Tile: $16./sf (include shower ceiling). All shower pans with Kerdi membrane installed at shower floor and walls as per manufacturer's specifications.

C. Marble Threshold: $30./lf. Labor and material.

D. Carpet: Not in contract.

4. Painting:

A. Submit color samples for review.

B. Obtain block fillers, primers and undercoat materials for wall coating system from the same manufacturer as the finish coats.

C. Paint and/or stain all exposed surfaces unless otherwise indicated.

D. Do not paint prefinished items, finished metal surfaces, operating parts, labels and materials obviously intended to be left exposed such as stone and tile. Do not paint concealed surfaces.

E. Deliver to Owner a one gallon (3.8 L) container, properly labeled and sealed, of each color and type of finish coat paint/stain used on Project.

F. All products as manufactured by Benjamin Moore, unless otherwise noted. Colors to be selected by Owner and Architect.

G. Comply with paint manufacturers written instructions for surface preparation, environmental and substrate conditions, product mixing and application.

H. All painting and staining to be brush applied for all interior and exterior doors, windows, trim, siding and flooring. Interior ceilings and walls to receive roller application. No spraying. Back-prime all trim, *etc.: interior and exterior, prior to installation. * Excluding Azek.

5. Exterior Paint Schedule:

A. Trim, Mouldings, Beadboard, & Wood Doors: 1 coat primer, 2 coats semi-gloss acrylic latex. Seal all doors top and bottom. Color to be selected.

B. Siding: 1 coat, primer, 1 coat finish (factory applied), 1 coat finish - field applied.

C. Trim: 1 coat primer applied prior to installation, 2 coats semi-gloss acrylic applied after installation Colors to be selected.

D. Wood Doors: Stain- 1 coat stain, 2 coats polyurethane. Seal top and bottom.

E. Factory primed doors - 2 coats semi-gloss acrylic latex. Seal top and bottom.

F. Wood Shingles - 1 coat primer
2 coats solid body stain

6. Interior Paint Schedule:

A. Ceilings:

1. 1 coat primer, 2 coats flat latex.

B. Walls:

1. 1 coat primer, 2 coats flat latex.

C. Trim, Base Mouldings:

1. Paint: 1 coat primer, 2 coats semi-gloss latex. Back - prime all trim, base and mouldings prior to installation.

D. Wood Railing:

1. Handrail: 1 coat semi-transparent stain/ 2 coats polyurethane or 1 coat primer, 2 coats semi-gloss latex.

2. Balusters: pre-primed, 2 coats gloss.

E. Windows:

1. Painted: 1 coat primer, 2 coats semi-gloss latex.

7. Location of Varying Finishes - Exterior:

A. Exterior Semi-gloss Acrylic Latex: Regal Select.

B. Exterior Primer: #094, #N-046 (for Azek)

C. Solid Body Stain: Benwood Solid Body Stain.

8. Location of Varying Finishes - Interior:

A. Semi-transparent Stain: Moorwood Semi-transparent Stain and Wood Preservative.

B. Filler: Benwood Paste Wood Filler.

C. Flat Latex: Regal Select #547

D. Primer #N-025 for drywall, Advance #290 & #793 for wood.

E. Semi-gloss/ Gloss Latex: Regal Select

F. Polyurethane: Benwood Polyurethane Finish, Satin Finish.

G. Primer - Kitchen & Baths - Benjamin Moore K&B #260, Finish #322.

DIVISION 10: SPECIALTIES

1. Provide an allowance for towel bars, toilet paper holder, soap dish, coat and robe hooks, etc. of $300./bath. Material only, labor to install in Bid. Provide solid blocking.

2. Medicine Cabinet: Provide an allowance of $300./cabinet. One per bath, unless otherwise noted.

3. Provide an allowance for plate glass mirror. Width as per drawings, height: 48".

4. Shower Doors: Provide $1200. allowance @ Master Bath and $1000. allowance @ all other baths. Material only, labor to install in Bid.

5. Gas fireplace: Provide an allowance of $1000. for a direct vent, zero clearance gas fireplace. Provide an allowance of $800. for stone surround. Include framing in base Bid.

DIVISION 11: EQUIPMENT

DIVISION 12: FURNISHINGS

DIVISION 15: MECHANICAL

1. Install all plumbing work in accordance with all local and state codes.

A. Wastes and Vents:

1. Waste: cast iron (traps, laterals and drops)

2. Vents: Schedule 40, black, cut vent at roof to roof pitch.

B. Hot and cold water piping: PEX Tubing.

C. Contractor is responsible for all rough-in, venting and final hook-up of all appliances and fixtures. Contractor to coordinate.

D. Provide (2) two - frost-free hose bibs. Locations to be reviewed with Owner.

E. Provide outdoor shower.

2. Plumbing fixtures: Provide allowances for the following, labor to install in Bid.

A. Powder Room -
Toilet ..... $350.
Sink ..... $300.
Faucet ..... $150.
Shower controls..... $400.

B. Kitchen -
Sink ..... $400.
Garbage Disposal ..... $400.
Faucet..... $300.
Island sink ..... $300.
Island faucet ..... $250.

C. Master Bath -
Tub ..... By Owner
Toilet ..... $350.
Sinks ..... $300. Each
Faucets..... $200. Each
Shower 1. Rain shower head.. $500.
2. Hand held shower.. $400.
3. Body spray..... $800.

D. Bath (Second floor)-
Sink ..... $300.
Faucet ..... $200.
Toilet ..... $350.
Shower controls..... $500.

E. Outdoor Shower - ..... $600. Provide shut-off in Residence for Winter draining.

3. HVAC:

A. Heating and Air Conditioning: Install new gas fired warm-air system. Zone 1 - first floor, Zone 2 - second floor. Locate condensing unit(s) on roof platform. Provide size required to Architect. All equipment to be installed on isolation pads. No vibration or noise to be transferred to structure.

Provide electric mat radiant floor heating at Master Bath, with timer as manufactured by Nuheat (1.800.778.9276), 24 sq ft (3'x8'). HVAC Sub-contractor to provide design, product data and drawings to Architect and Owner for review four weeks prior to commencement of work. Systems to be safe, quiet and economical in operation and complete in all respects. Thermostats shall be programmable.

B. Heating system shall maintain a uniform temperature of 70°F in all spaces when the outside temperature is 0°F. Air conditioning system shall maintain a uniform temperature of 75°F when outside temperature is 95°F. Provide all filters (HEPA), grilles and registers. All ductwork shall be galvanized rectangular sheetmetal and insulated. Round air duct shall be insulated flexible duct. All work shall comply with all local, state and national codes and standards. All floor and wall registers shall be metal.

C. Condensing unit location at roof platform.

4. Coordinate all work with other trades. Provide all supplementary supports, hangers, etc. for all equipment. Provide manufacturer's full warranty on all equipment.

5. All system equipment to be tested to assure proper balancing and operation.

6. Provide gas fired on demand hot water system. Size appropriately and indicate number of units. As manufactured by Noritz. Sample model: N-069M.

DIVISION 16: ELECTRICAL

1. Install all work in accordance with all local, state and national codes and standards.

2. Contractor to provide underground 200 amp electrical service. Provide sub-panels as may be required. Underground conduit shall be sized to accomodate electrical, cable TV and telephone.

3. Location of switches, outlet boxes, fixtures and equipment is shown diagrammatically on drawings provided by Architect. Verify locations in field with Architect before roughing. Provide six (6) days notice prior to roughing. Outlets shown, etc., are specific locations. Otherwise, in all cases, locations shall be per National Electric Code.

4. Fixtures: To be supplied and installed by Contractor unless otherwise noted. Fixture allowances are for materials. Labor to wire and install in Bid. See Lighting Schedule.

5. Outlets, switches and fan controls: Lutron, Diva. Color to be selected.

6. All wiring in finished spaces shall be concealed.

7. Entire system to be grounded as per Code.

8. Electrical Contractor is responsible for wiring all equipment, including HVAC and appliances.

9. Coordinate locations of studs, rafters, ceiling joists, other systems, etc., in order to accommodate fixture locations, switch and outlet locations.

10. General Contractor and Electrical Contractor to coordinate work with Security System Consultant.

11. Smoke and Carbon Monoxide Detectors per code.

12. Install Transfer Switch and gas-fired generator. Generator to accommodate heating, refrigeration, select lighting and alarm. Suspend generator and provide for isolation so no vibration is transferred to structure. Provide exhaust as per code. Generator to be a minimum of one (1) foot above the Base Flood Elevation (BFE).

CONFIDENTIAL
PROPRIETARY INFORMATION

THE INFORMATION HEREIN IS OF A PROPRIETARY NATURE AND IS SUBMITTED IN CONFIDENCE FOR USE BY OUR CLIENTS ONLY. UNAUTHORIZED REPRODUCTION, PUBLICATION, DISTRIBUTION OR DISSEMINATION, IN WHOLE OR IN PART, IS EXPRESSEDLY PROHIBITED. THE INFORMATION CONTAINED HEREIN IS AND REMAINS THE PROPERTY OF W. S. GARRICK ARCHITECTS, AND RECEIPT OR POSSESSION OF THIS INFORMATION CONFERS NO RIGHT IN OR LICENSE TO USE OR TO DISCLOSE TO OTHERS THE SUBJECT MATTER CONTAINED HEREIN FOR ANY BUT AUTHORIZED PURPOSES. ALL RIGHTS RESERVED.

FOR BUILDING PERMIT

Wayne S. Garrick A.I.A.
Architects
891 Whitney Avenue New Haven, Connecticut 06511
203 - 776 - 1574 fax 203 - 776 - 8002

Revisions-
12.30.13
5.8.14

Project Number: 1301
Scale: AS NOTED
Date: 05.07.2013
Drawn By: ZK
Checked By: WSG

HELD
159 HILLSIDE AVENUE MILFORD CT

A.1b

CONFIDENTIAL
PROPRIETARY INFORMATION

THE INFORMATION HEREIN IS OF A PROPRIETARY NATURE AND IS SUBMITTED IN CONFIDENCE FOR USE BY OUR CLIENTS ONLY. UNAUTHORIZED REPRODUCTION, PUBLICATION, DISTRIBUTIONOR DISSEMINATION, IN WHOLE OR IN PART, IS EXPRESSEDLY PROHIBITED. THE INFORMATION CONTAINED HEREIN IS AND REMAINS THE PROPERTY OF W. S. GARRICK ARCHITECTS, AND RECEIPT OR POSSESSION OF THIS INFORMATION CONFERS NO RIGHT IN OR LICENSE TO USE OR TO DISCLOSE TO OTHERS THE SUBJECT MATTER CONTAINED HEREIN FOR ANY BUT AUTHORIZED PURPOSES. ALL RIGHTS RESERVED.

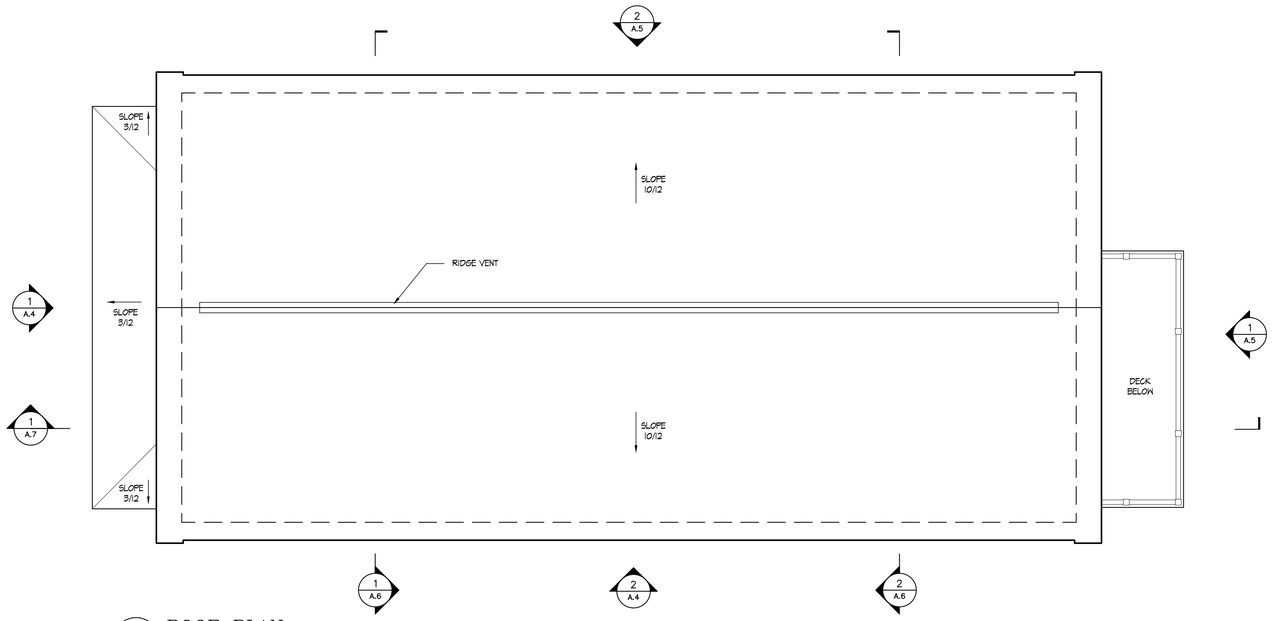

2 A.2 ROOF PLAN
1/4"=1'-0"

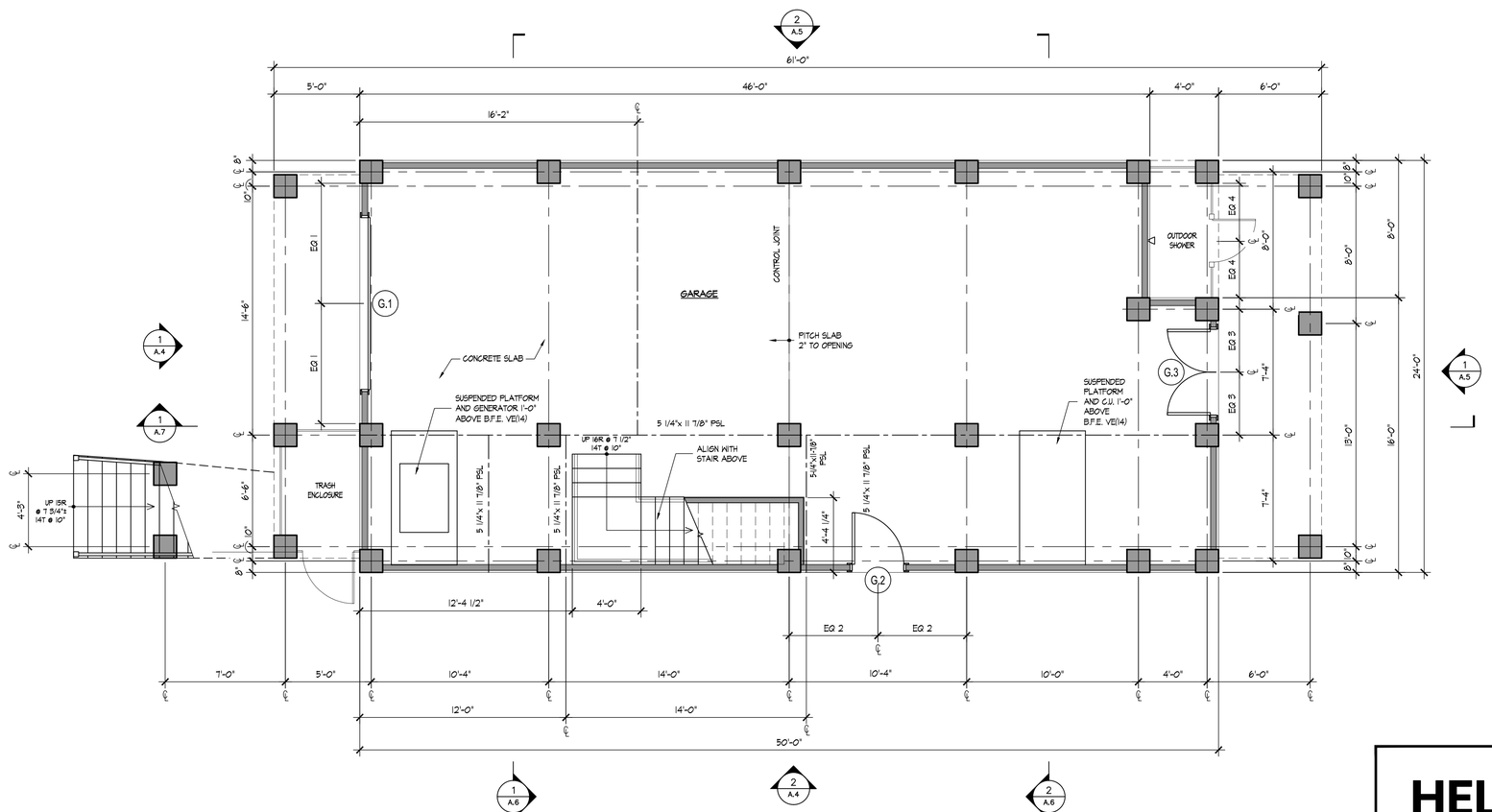

1 A.2 GROUND FLOOR PLAN
1/4"=1'-0"

FOR
BUILDING
PERMIT

Wayne S. Garrick A.I.A.
Architects
891 Whitney Avenue New Haven, Connecticut 06511
203 - 776 - 1874 fax: 203 - 776 - 8002

Revisions:
12.30.13
5.8.14

Project Number: 1301
Scale: FS NOTED
Date: 05.07.2013
Drawn By: ZK
Checked By: WSG

HELD
159 HILLSIDE AVENUE MILFORD CT

N

A.2

NOTES:

1. THIS MAP HAS BEEN PREPARED PURSUANT TO THE REGULATIONS OF CONNECTICUT STATE AGENCIES SECTIONS 20-300B-1 THRU 20-300B-20 AND "THE STANDARDS FOR SURVEYS AND MAPS IN THE STATE OF CONNECTICUT" AS ADOPTED BY THE CONNECTICUT ASSOCIATION OF LAND SURVEYORS, INC. ON SEPTEMBER 26, 1996. THE ZONING LOCATION SURVEY IS BASED ON A "DEPENDENT RESURVEY" OF A PORTION OF LOT NUMBER #3 AS DEPICTED ON THE MAP REFERENCED IN NOTE #2 BELOW, CONFORMING TO HORIZONTAL CLASS "A-2", AND VERTICLE CLASS "T-2". ELEVATIONS SHOWN HEREON ARE NAVD (1988) DATUM.
2. PROPERTY BEING KNOWN AS LOT #117, AS SHOWN ON A CERTAIN MAP ENTITLED "LOTS AT BURWELL'S BEACH, OWNED BY GEORGE E. HASKINS, MILFORD, CONN., DATE: NOVEMBER 13, 1912". SAID MAP IS ON FILE IN THE MILFORD TOWN CLERK'S OFFICE BEARING FILE #A-28.
3. REFER TO "ZONING LOCATION SURVEY, PREPARED FOR JOYCE M. SALTMAN, No.163 HILLSIDE AVENUE, DATED: JULY 20, 2009", BY WILLIAM F. ORSINE, L.S.
4. PROPERTY SHOWN ON TAX ASSESSOR'S MAP: 49, BLOCK: 795, PARCEL: 77.
5. REFER TO DEED VOL.3248-PG.247 MILFORD LAND RECORDS FOR ANY EASEMENTS AND OR RESTRICTIONS.
6. RESIDENCE LIES IN FLOOD ZONES "AE(11)" & "VE(14)" AS SHOWN ON FIRM MAP #09009C0532H, DATED: DECEMBER 17, 2010.
7. ELEVATIONS SHOWN HEREON ARE NAVD(1988) DATUM.
8. ANY UNDERGROUND UTILITIES WHICH MAY EXIST ARE UNKNOWN.

We recommend... Call Before You Dig 1-800-922-4455

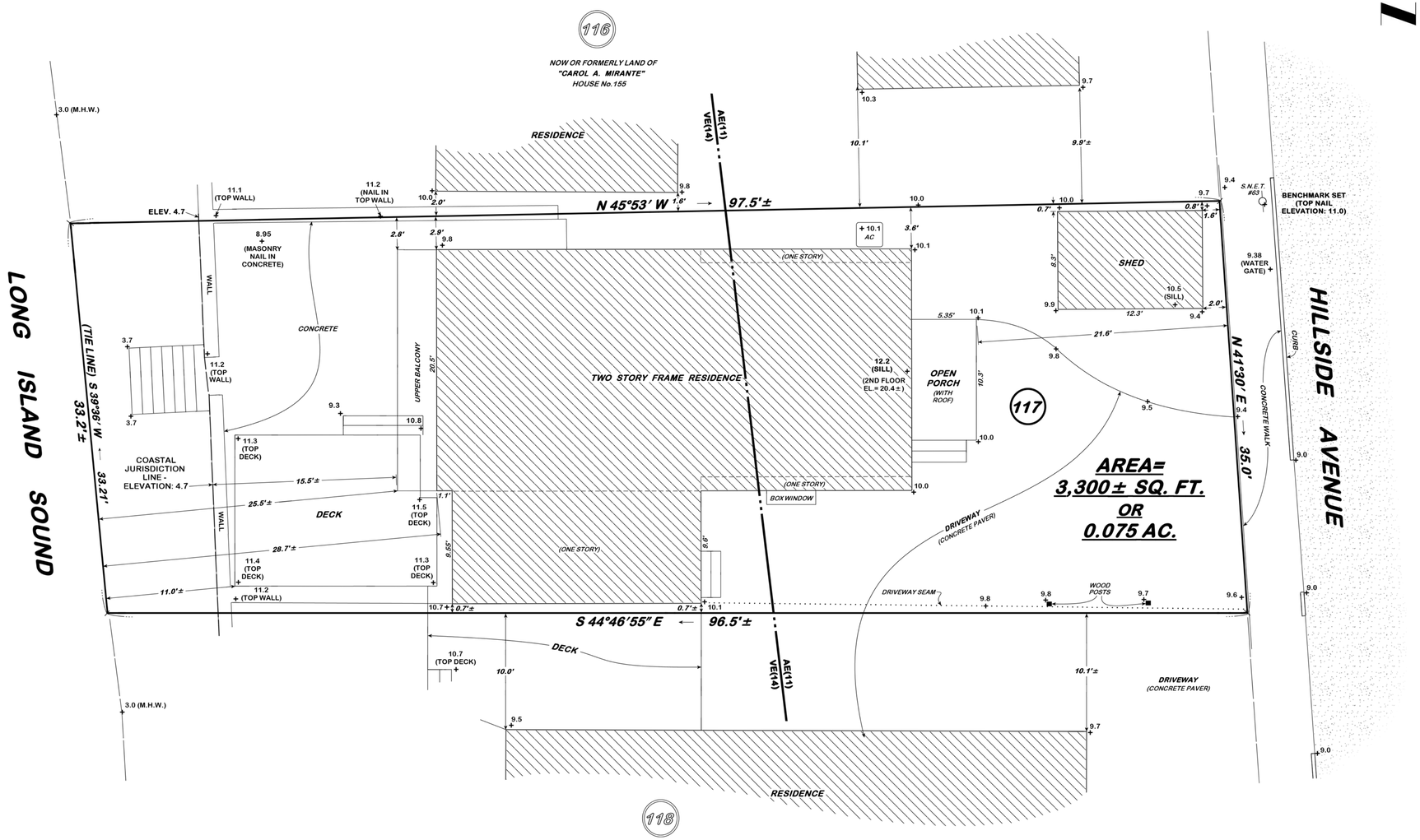

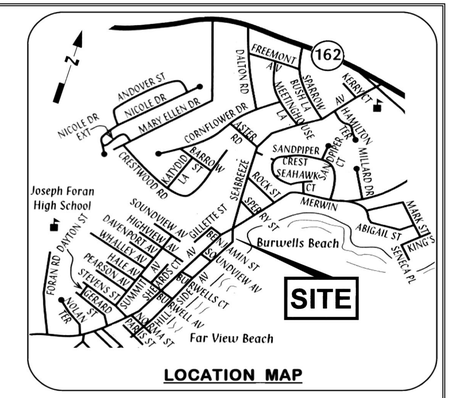

PROPERTY LIES IN RESIDENCE "R-5" ZONE

TAX ASSESSOR'S MAP: 49, BLOCK: 795, PARCEL: 77

SET BACKS	REQUIRED / MINIMUM	EXISTING
LOT SIZE	5,000	3,300
LOT WIDTH	50'	34'
FRONT SETBACK	20'	* 21.6'
SIDE YARD	10' / 5'	** 2.9' / 0.7
REAR YARD	20'	*** 25.3' +/-

* TO EXISTING FRONT PORCH,
** TO EXISTING MAIN BUILDING,
*** TO EXISTING REAR BALCONY, 10.6' TO EXISTING REAR DECK (DILAPIDATED).

MAXIMUM ALLOWED		
BUILDING AREA	45 %	46.5 %
TOTAL COVERAGE	65 %	77 %
BUILDING HEIGHT		
STORIES	3	2
FEET	35'	24' +/-

NOTE: TOTAL COVERAGE IS APPROXIMATE DUE TO STORM SAND RELOCATION.

THIS MAP IS NOT VALID IF ALTERED BY ANYONE OTHER THAN ORIGINAL SURVEYOR.

FIELD SURVEY CONFORMS TO METHODS RECOMMENDED IN A CLASS "A-2" SURVEY

THIS MAP IS NOT VALID UNLESS EMBOSSED WITH SEAL OF CERTIFYING SURVEYOR

RICHARD W. PLAIN, JR.
REGISTERED LAND SURVEYORS
29 Hunters Run
Milford, Connecticut 06460-3762
Ph: (203) 878-3818
Fax: (203) 876-1393
Email: richardplain@sbcglobal.net

Certified substantially correct,

Richard W. Plain, Jr., L.S., CT. Reg. # 70091

ZONING LOCATION SURVEY

PREPARED FOR

STEVEN & NANCY HELD

159 HILLSIDE AVENUE

MILFORD, CONNECTICUT

SCALE: 1 IN. = 5 FT. DATE: DECEMBER 11, 2012

"COASTAL JURISDICTION LINE" ADDED: AUG. 12, 2013.

0 2½ 5 7½ 10 12½ 15

by RICHARD W. PLAIN
LAND SURVEYORS

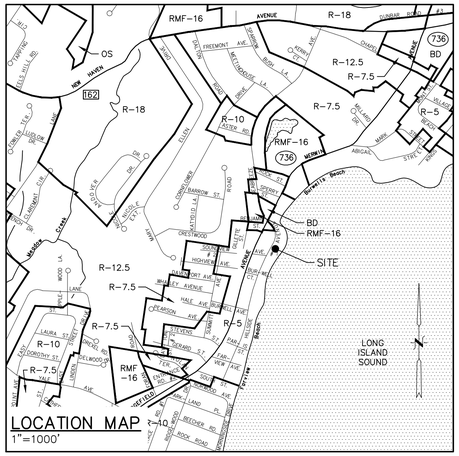

LOCATION MAP
1"=1000'

GENERAL NOTES:

1. THIS PLAN WAS COMPILED USING THE FOLLOWING REFERENCE MAP:
   A) MAP ENTITLED "ZONING LOCATION SURVEY, PREPARED FOR, STEVEN & NANCY HELD, 159 HILLSIDE AVENUE, MILFORD, CONNECTICUT", SCALE: 1"=5', DATED: DECEMBER 11, 2012, PREPARED BY RICHARD W. PLAIN LAND SURVEYORS.
2. THE APPLICANT IS STEVEN HELD, TRUSTEE OF 159 HILLSIDE AVENUE, MILFORD, CT.
3. THE SUBJECT PARCEL IS IDENTIFIED AS LOT 77 BLOCK 795 ON TAX ASSESSOR'S MAP 49. THE DEED REFERENCE OF THE PROPERTY IS VOLUME 3248 PAGE 247. THE AREA OF THE PARCEL IS 3,299± S.F. OR 0.08 ACRES.
4. THE SUBJECT PROPERTY IS LOCATED WITHIN THE "R-5" ZONING DISTRICT. THE PARCEL LIES WITHIN THE COASTAL AREA MANAGEMENT (CAM) ZONE. A COASTAL SITE PLAN REVIEW IS REQUIRED FOR THIS PROJECT SINCE THERE ARE COASTAL RESOURCES LOCATED WITHIN 100' OF THE PROPERTY. THE PARCEL LIES WITHIN FEMA FLOOD HAZARD ZONES VE (EL 13), AE (EL 13) AND AE (EL 12) AS SHOWN HEREON.
5. THE APPLICANT IS PROPOSING TO DEMOLISH THE EXISTING 2-BEDROOM DWELLING AND CONSTRUCT A NEW 3-BEDROOM DWELLING ON THE LOT. THE PROPOSED DWELLING WILL BE CONSTRUCTED ON A PILE SUPPORTED FOUNDATION AND WILL NOT HAVE FOOTING DRAINS. THE STRUCTURE IS PROPOSED TO BE IN COMPLIANCE WITH CURRENT FEMA REGULATIONS.
6. THE PURPOSE OF THIS PLAN IS FOR REVIEW BY THE MILFORD ZONING BOARD OF APPEALS TO SEEK NECESSARY VARIANCES AND FOR REVIEW BY THE PLANNING AND ZONING COMMISSION FOR A SPECIAL PERMIT DUE TO PROPOSED WORK WITHIN 25' OF THE COASTAL JURISDICTION LINE.
7. THIS PROPERTY IS SERVED BY PUBLIC WATER AND PUBLIC SEWER. THE EXACT LOCATIONS OF THE WATER SERVICE AND SANITARY SEWER LATERAL ARE UNKNOWN.
8. REFER TO ARCHITECTURAL DRAWINGS FOR ADDITIONAL PROPOSED BUILDING INFORMATION.
9. ALL ELEVATIONS SHOWN HEREON ARE REFERENCED TO NAVD-88 DATUM.

SITE DRAINAGE NARRATIVE

THE TOTAL LOT COVERAGE WILL BE SIGNIFICANTLY REDUCED FOR THE PROPOSED CONDITION FROM 79.6% (2,627 S.F.) TO 64.6% (2,132 S.F.), WHICH IS BELOW THE MAXIMUM ALLOWABLE LOT COVERAGE IN THE DISTRICT OF 65% AS SET FORTH IN THE CITY OF MILFORD ZONING REGULATIONS. THIS WILL BE ATTAINED BY REMOVING THE EXISTING CONCRETE PATIO ON THE WATERSIDE OF THE DWELLING, THE EXISTING SHED AND A PORTION OF THE EXISTING PAVER DRIVE. IT IS PROPOSED TO HAVE A CRUSHED STONE SURFACE BENEATH THE NEW DWELLING.

THE SITE GENTLY SLOPES FROM THE NORTHWEST TO THE SOUTHEAST TOWARD THE LONG ISLAND SOUND. THE UNDERLYING SOIL ON THE SITE CONSISTS OF VERY WELL-DRAINED SANDS AND GRAVELS. THE PROPOSED SITE WILL BE COMPRISED OF 35.4% PERVIOUS SURFACES. THEREFORE, WITH THE REDUCTION IN TOTAL LOT COVERAGE AND ADDITIONAL PERVIOUS AREA CREATED BENEATH THE DWELLING, THE PROPOSED CONDITION WILL REDUCE THE QUANTITY OF STORMWATER RUNOFF GENERATED FROM THE SITE AND WILL ENHANCE STORMWATER QUALITY BY INCREASING INFILTRATION INTO THE UNDERLYING SOILS. ROOF DOWNSPOUTS WILL BE FITTED WITH SPREADERS OR SPLASH BLOCKS TO INHIBIT EROSION AND EVENLY DISPERSE RUNOFF TO THE GROUND.

CONSTRUCTION NOTES:

1. THE CONTRACTOR SHALL CONTACT "CALL BEFORE YOU DIG" AT 1-800-922-4455 TO HAVE ALL UTILITIES MARKED OUT PRIOR TO COMMENCING ANY CONSTRUCTION ACTIVITIES. CONTRACTOR SHALL VERIFY ALL LOCATIONS, DIMENSIONS AND ELEVATIONS OF ALL UTILITIES PRIOR TO CONSTRUCTION.
2. IT IS ANTICIPATED THAT ALL UTILITY SERVICE CONNECTIONS WILL REMAIN UNCHANGED. IF ANY UTILITY WORK IS NECESSARY, IT SHALL BE IN CONFORMANCE WITH THE REQUIREMENTS AND SPECIFICATIONS OF THE CITY OF MILFORD AND THE CUSTODIAL UTILITY COMPANIES. THE LOCATIONS OF EXISTING UTILITY SERVICES ARE UNKNOWN AND SHALL BE VERIFIED PRIOR TO CONSTRUCTION.
3. ALL PROPERTY LINES SHALL BE VERIFIED IN THE FIELD. NO PRIVATE PROPERTY SHALL BE DISTURBED UNLESS PROPER RIGHTS ARE OBTAINED PRIOR TO CONSTRUCTION.
4. THE CONTRACTOR SHALL OBTAIN ALL REQUIRED PERMITS REQUIRED BY THE CITY OF MILFORD PRIOR TO CONSTRUCTION.
5. THE CONTRACTOR SHALL OBTAIN, REVIEW AND ADHERE TO ALL REQUIREMENTS AND ANY CONDITIONS OF APPROVAL OF THE CITY OF MILFORD.
6. MINIMAL GROUND DISTURBANCE IS ANTICIPATED AND A FULL E&S CONTROL PLAN IS NOT REQUIRED SINCE THE WORK AREA IS LESS THAN 1/2-ACRE. HOWEVER, THE CONTRACTOR SHALL INSTALL SILT FENCE AND HAYBALES AS SHOWN HEREON AND TAKE ANY ADDITIONAL MEASURES NECESSARY TO PROTECT ADJACENT PROPERTIES AND STREETS FROM ANY EROSION AND/OR SEDIMENTATION. A 6' HIGH TEMPORARY CHAINLINK CONSTRUCTION FENCE SHALL BE ERECTED ON THE WATERSIDE OF THE PROPOSED DWELLING AS SHOWN PRIOR TO THE START OF CONSTRUCTION.
7. THE PROPOSED DWELLING WILL BE CONSTRUCTED ON A PILE SUPPORTED FOUNDATION. ALL MECHANICALS AND STRUCTURAL MEMBERS SHALL BE INSTALLED AT OR ABOVE ELEVATION 13.0 (NAVD-88) IN ACCORDANCE WITH CURRENT FEMA FLOOD REGULATIONS. THE CONTRACTOR SHALL ENSURE THAT THE MAXIMUM BUILDING HEIGHT DOES NOT EXCEED 35 FEET MEASURED FROM THE AVERAGE EXISTING GRADE WITHIN 10' OF THE PROPOSED DWELLING. THE PROPOSED FINISHED FLOOR ELEVATION (F.F.E.) OF 20.0± WAS PROVIDED BY THE PROJECT ARCHITECT. THE F.F.E. SHALL NOT BE ADJUSTED WITHOUT PRIOR CONSENT OF THE ENGINEER AND ARCHITECT.
8. ALL EXISTING DRAINAGE PATTERNS SHALL BE MAINTAINED. THE CONTRACTOR SHALL GRADE THE PROPERTY IN SUCH A MANNER TO MAINTAIN EXISTING LOCAL DRAINAGE PATTERS AND TO PREVENT EXCESS RUNOFF AND/OR PONDING ON ADJACENT PROPERTIES.
9. ALL ROOF DOWNSPOUTS SHALL BE FITTED WITH SPREADERS OR SPLASH BLOCKS TO EVENLY DISPERSE RUNOFF TO THE GROUND. PER THE CLARENCE WELTI ASSOCIATES, INC BORING HOLE DATED 1/8/13, THE UNDERLYING SOIL (DOWN TO 10') ON THE SITE CONSISTS OF FINE-COARSE SAND WITH GRAVEL WHICH IS CONDUCIVE TO INFILTRATION.
10. NO PUBLIC ACCESS IS PROVIDED FROM THIS SITE TO THE BEACH/WATER. THE CLOSEST PUBLIC ACCESS IS LOCATED APPROXIMATELY 200' TO THE WEST, DIRECTLY ACROSS FROM SOUNDVIEW AVENUE.
11. NO SOIL WILL BE STOCKPILED ON SITE DURING CONSTRUCTION, BUT RATHER REMOVED.
12. THE PROPOSED DUMPSTER LOCATED ON SITE DURING CONSTRUCTION WILL HAVE A TARP COVER.
13. THE CONTRACTOR SHALL BE RESPONSIBLE TO OBTAIN AND ADHERE TO ALL DEMOLITION PERMITS. ALL UTILITIES SHALL BE PROPERLY DISCONNECTED AT THE STREET PRIOR TO ANY DEMOLITION ACTIVITIES.

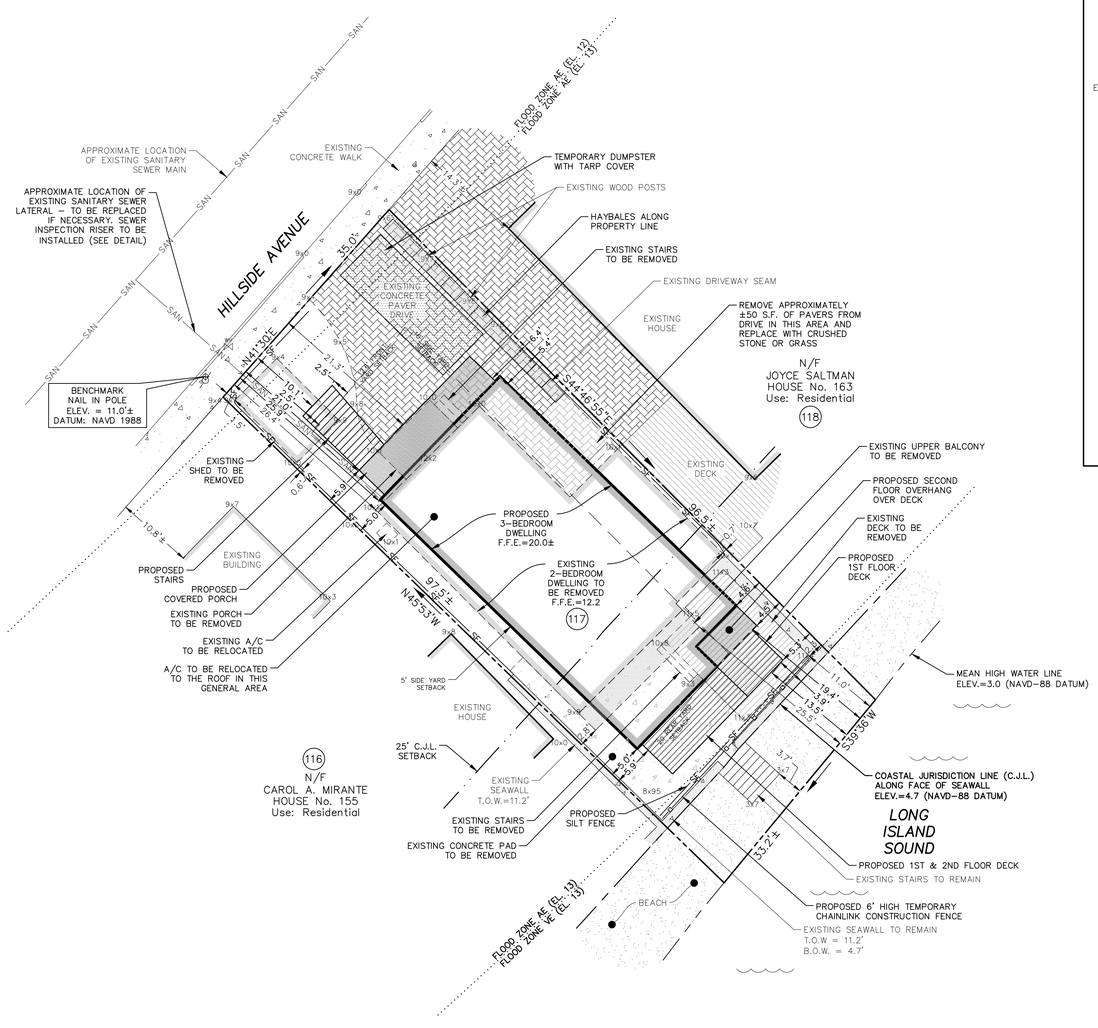

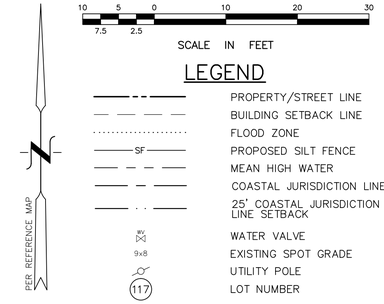

EXISTING COVERAGES:

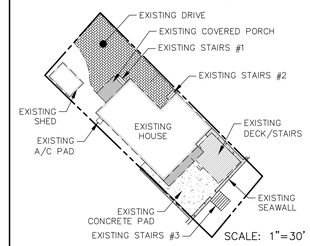

LOT AREA:	3,299 S.F.
EXISTING HOUSE:	1,091 S.F.
EXISTING DECK/STAIRS:	222 S.F.
EXISTING SHED:	102 S.F.
EXISTING COVERED PORCH:	56 S.F.
EXISTING STAIRS #1:	9 S.F.
EXISTING STAIRS #2:	7 S.F.
EXISTING STAIRS #3:	37 S.F.
EXISTING DRIVE:	701 S.F.
EXISTING CONCRETE PAD:	322 S.F.
EXISTING SEAWALL:	76 S.F.
EXISTING A/C PAD:	4 S.F.
EXISTING BUILDING AREA:	1,249 S.F.
PERCENT EXISTING BUILDING AREA:	1,249 S.F. / 3,299 S.F. = 37.9%

*DRIVEWAY, SEAWALL, STAIRS TO BEACH, & CONCRETE SLAB NOT INCLUDED IN BUILDING AREA

EXISTING LOT COVERAGE:	2,627 S.F.
PERCENT EXISTING LOT COVERAGE:	2,627 S.F. / 3,299 S.F. = 79.6%

PROPOSED COVERAGES:

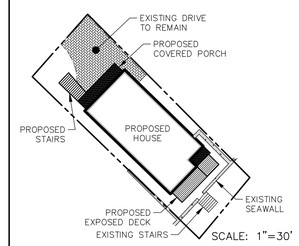

LOT AREA:	3,299 S.F.
PROPOSED HOUSE:	1,200 S.F.
PROPOSED COVERED PORCH:	111 S.F.
PROPOSED EXPOSED DECK:	133 S.F.
PROPOSED STAIRS:	63 S.F.
EXISTING STAIRS:	37 S.F.
EXISTING SEAWALL:	76 S.F.
EXISTING DRIVE TO REMAIN:	512 S.F.
PROPOSED BUILDING AREA:	1,311 S.F.
PERCENT PROPOSED BUILDING AREA:	1,311 S.F. / 3,299 S.F. = 39.7%

*DRIVEWAY, SEAWALL & STAIRS TO BEACH NOT INCLUDED IN BUILDING AREA

PROPOSED LOT COVERAGE:	2,132 S.F.
PERCENT PROPOSED LOT COVERAGE:	2,132 S.F. / 3,299 S.F. = 64.6%

ZONING DATA TABLE

MILFORD ZONING DISTRICT R-5

ITEM	REQUIRED	EXISTING	PROPOSED
MIN. LOT AREA	5,000± SQ. FT. (1)	3.299± SQ. FT. (1)	3.299± SQ. FT. (1)
MIN. LOT WIDTH	50 FT.	34.6 FT. (2)	34.6 FT. (2)
MIN. LOT DEPTH	70 FT.	±97.0 FT.	±97.0 FT.
FRONT YARD SETBACK (3)	12.8 FT.	1.5 FT. (SHED) (4) 21.3 FT. (COVERED PORCH) 26.4 (HOUSE)	10.1 FT. (STAIRS) (5) 21.0 FT. (COVERED PORCH) 25.9 FT. (HOUSE)
SIDE YARD SETBACK (WEST)	5 FT.	2.8 FT. (BALCONY) (4)	5.0 FT. (HOUSE) 5.9 FT. (COVERED PORCH) 5.9 FT. (DECK)
SIDE YARD SETBACK (EAST)	10 FT.	0.7 FT. (HOUSE) (4) 2.3 FT. (DECK) (4)	4.5 FT. (HOUSE) 5.3 FT. (DECK) 6.4 FT. (PORCH)
REAR YARD SETBACK	20 FT.	3.7 FT. (STAIRS) (4) 11.0 FT. (DECK) (4) 25.5 FT. (HOUSE)	3.7 FT. (STAIRS) 13.5 FT. (DECK) 19.4 FT. (HOUSE)
SIDE YARD SETBACK (ACCESSORY)	4 FT.	0.6 FT. (SHED)(WEST) (4)	N/A
MAX. # OF STORIES	3	2	3
MAX. BUILDING HEIGHT (6)	35 FT.	±24 FT.	±34'-4 1/4"
MAX. BUILDING AREA (7)	45% (1,485 S.F.)	37.9% (±1,249 S.F.)	39.7% (±1,311 S.F.)
MAX. LOT COVERAGE (7)	65% (2,144 S.F.)	79.6% (±2,627 S.F.)	64.6% (±2,132 S.F.)

(1) PER SECTION 6.4.1 - EXISTING NON-CONFORMING LOT.
(2) MIN. LOT WIDTH IS MEASURED ALONG THE STREET LINE SETBACK - EXISTING NON-CONFORMITY.
(3) FRONT YARD SETBACK IS EQUAL TO TEN FEET OR THE ACTUAL FRONT YARD SETBACK, WHICH EVER IS GREATER; THE ACTUAL AVERAGE FRONT YARD SETBACK BETWEEN ADJACENT BUILDINGS IS 12.6'±.
(4) EXISTING NON-CONFORMITY.
(5) PER SECTION 4.1.4, NO MORE THAN 4' OR 20% OF THE REQUIRED YARD SETBACK IS ALLOWED FOR A PROJECTION INTO THE SETBACK. THEREFORE, MAXIMUM ALLOWABLE FRONT YARD PROJECTION = 12.6'x0.20=2.52' INTO SETBACK. MAXIMUM ALLOWABLE FRONT YARD SETBACK TO PROJECTION = 12.6'-2.5'=10.1'
(6) MAX. BUILDING HEIGHT IS CALCULATED FROM THE AVERAGE EXISTING GRADE SURROUNDING THE BUILDING AND WITHIN 10' THEREOF (EL. 10.0±) TO THE MIDPOINT OF THE ROOF. EXISTING BUILDING HEIGHT PROVIDED ON REFERENCE MAP. PROPOSED BUILDING HEIGHT PROVIDED PER ARCHITECTURAL PLANS.
(7) REFER TO COVERAGE INSERT MAPS FOR DETAILED INFORMATION ON BUILDING AREA AND LOT COVERAGE.

PLAN PREPARED BY:
INDIGO LAND DESIGN, LLC
JOSEPH VIREN, P.E.
CT REG. NO. 21090
P.O. BOX 1036
OLD SAYBROOK, CT 06475
PHONE: (860) 202-0693
FAX: (860) 388-9343

#	DATE	DESCRIPTION	BY
2	11/6/13	PUBLIC WORKS COMMENTS	SM
1	9/10/13	GENERAL REVISIONS	SM

THE EMBOSSED SEAL OF THE ENGINEER MUST BE AFFIXED HERE FOR THIS MAP TO BE VALID

COASTAL SITE PLAN

PREPARED FOR STEVEN HELD
159 HILLSIDE AVENUE -- MAP 49 LOT 77
MILFORD, CONNECTICUT

DATE: AUGUST 14, 2013
SCALE: 1"=10'
DRAWN BY: CH
CHKD BY: SM, JW
DWG. NO.: CSP-1
SHEET NO.: 1 of 2
JOB NO.: 2013-072

SOIL EROSION AND SEDIMENT CONTROL PLAN NARRATIVE

THE SITE CONTRACTOR MUST FOLLOW ALL GUIDELINES SET FORTH IN THE MANUAL ENTITLED "2002 CONNECTICUT GUIDELINES FOR SOIL EROSION AND SEDIMENT CONTROL" PUBLISHED BY THE CONNECTICUT COUNCIL ON SOIL AND WATER CONSERVATION IN COOPERATION WITH THE CONNECTICUT DEPARTMENT OF ENVIRONMENTAL PROTECTION. THIS MANUAL IS ALSO KNOWN AS DEP BULLETIN 34.

PROJECT DESCRIPTION

THE APPLICANT IS PROPOSING TO DEMOLISH THE EXISTING 2-BEDROOM DWELLING AND CONSTRUCT A NEW 3-BEDROOM DWELLING ON THE LOT. THE PROPOSED DWELLING WILL BE CONSTRUCTED ON A PILE SUPPORTED FOUNDATION AND WILL NOT HAVE FOOTING DRAINS. THE STRUCTURE IS PROPOSED TO BE IN COMPLIANCE WITH CURRENT FEMA REGULATIONS.

REMOVAL OF THE EXISTING HOUSE AND CONSTRUCTION OF THE PROPOSED HOUSE IS ANTICIPATED TO COMMENCE AS SOON AS POSSIBLE. ALL EROSION AND SEDIMENT CONTROLS SHALL BE INSTALLED PRIOR TO CONSTRUCTION ACTIVITIES. E & S CONTROLS SHALL BE MAINTAINED AND REPAIRED OR REPLACED AS NEEDED THROUGHOUT THE CONSTRUCTION DURATION. ALL E & S CONTROLS SHALL BE REMOVED AND PROPERLY DISPOSED OF AS SOON AS THE SITE IS COMPLETELY STABILIZED.

CONSTRUCTION SEQUENCE

1. CONTACT "CALL BEFORE YOU DIG" TO MARK OUT ALL UTILITY LOCATIONS PRIOR TO ANY CONSTRUCTION ACTIVITIES.
2. ENSURE ALL LAND USE PERMITS HAVE BEEN SECURED. OBTAIN ALL NECESSARY PERMITS.
3. INSTALL ALL EROSION AND SEDIMENT CONTROLS, INCLUDING SILT FENCE AND TEMPORARY CHAIN LINK FENCE.
4. ALL UTILITIES SHALL BE PROPERTLY DISCONNECTED AT THE STREET.
5. REMOVE EXISTING HOUSE AND SHED.
6. BEGIN CONSTRUCTION OF FOUNDATION AND HOUSE.
7. CONNECT SEWER LINE AND WATER LINE TO HOUSE ONCE ROUGH CARPENTRY AND PLUMBING IS COMPLETE.
8. FINISH GRADE, SEED AND MULCH ALL DISTURBED AREAS AS REQUIRED.
9. REMOVE ALL EROSION AND SEDIMENT CONTROLS AND CONSTRUCTION FENCING & DUMPSTER ONCE SITE IS COMPLETELY STABILIZED. DISPOSE OF PROPERLY.

LAND DISTURBANCE

1. ALL EXISTING VEGETATION OUTSIDE OF THE LIMITS OF DISTURBANCE SHALL BE PROTECTED. EXISTING VEGETATION SHALL BE REMOVED ONLY IN AREAS NECESSARY FOR SITE CONSTRUCTION ACTIVITIES. ANY ADDITIONAL CLEARING OUTSIDE OF THE PROPOSED CLEARING LIMITS SHALL BE APPROVED BY TOWN STAFF PRIOR TO CLEARING.
2. ALL AREAS SHALL REMAIN UNDISTURBED UNTIL IMMEDIATELY PRIOR TO SITE DEVELOPMENT.
3. ALL CONSTRUCTION EQUIPMENT, MATERIALS AND STOCKPILES SHALL NOT BE PLACED OUTSIDE OF THE DISTURBED AREAS.
4. THE DEVELOPER SHALL BE RESPONSIBLE FOR THE CLEANING OF ANY NEARBY STREETS, AS ORDERED BY THE TOWN OR STATE, OF ANY SOIL OR DEBRIS FROM THE SITE CONSTRUCTION ACTIVITIES.
5. ALL TREES, BRUSH, STUMPS, WOOD CHIPS OR OTHER ORGANIC MATTER SHALL BE DISPOSED OF PROPERLY OFF-SITE. WOOD CHIPS MAY BE USED AS A SILTATION BARRIER DURING CONSTRUCTION AND SPREAD AFTER SITE IS STABILIZED. NO ORGANIC MATTER INCLUDING TREES, BRUSH AND STUMPS SHALL BE BURIED ON-SITE.

STRIPPING AND STOCKPILING

ALL STOCKPILES THAT CONSIST OF ERODIBLE MATERIALS SHALL BE LOCATED WITHIN AREAS AS SHOWN ON THE SITE PLAN AND SURROUNDED BY A SILTATION BARRIER. ANY STOCKPILE THAT WILL REMAIN UNDISTURBED FOR A PERIOD LONGER THAN 30 DAYS SHALL BE SEEDED WITH A TEMPORARY GRASS SEED MIXTURE TO PREVENT EXCESSIVE EROSION AND SEDIMENTATION.

SOIL EROSION AND SEDIMENT CONTROLS

ALL ADJACENT PROPERTIES AND RECEIVING WATERCOURSES AND / OR WETLAND AREAS SHALL BE ADEQUATELY PROTECTED FROM SOIL EROSION AND SEDIMENTATION BOTH DURING AND AFTER CONSTRUCTION.

ADDITIONAL EROSION AND SEDIMENT CONTROLS MAY BE REQUIRED BY THE TOWN AND SHALL BE INSTALLED AND MAINTAINED BY THE CONTRACTOR. THE CONTRACTOR SHALL BE RESPONSIBLE FOR THE PROPER INSTALLATION AND MAINTENANCE OF ALL EROSION AND SEDIMENT CONTROLS BEFORE, DURING AND AFTER CONSTRUCTION. THE CONTRACTOR IS ALSO RESPONSIBLE FOR THE PROPER REMOVAL AND DISPOSAL OF ALL EROSION AND SEDIMENT CONTROLS ONCE THE SITE IS COMPLETELY STABILIZED.

ALL EROSION AND SEDIMENT CONTROLS SHALL BE INSPECTED WEEKLY AND AFTER ALL RAINFALL EVENTS. E & S CONTROLS SHALL BE REPAIRED OR REPLACED AS NECESSARY WITHIN 24 HOURS THROUGHOUT THE CONSTRUCTION DURATION.

ALL ACCUMULATED SEDIMENTS AT ALL EROSION AND SEDIMENT CONTROLS SHALL BE PERIODICALLY REMOVED AND SPREAD IN AREAS THAT ARE NOT SUBJECT TO EROSION.

THE PERMITTEE SHALL EMPLOY BEST MANAGEMENT PRACTICES, CONSISTENT WITH THE TERMS AND CONDITIONS OF THE INLAND WETLANDS PERMIT (IF APPLICABLE), TO CONTROL STORMWATER DISCHARGES AND TO PREVENT EROSION AND SEDIMENTATION AND TO OTHERWISE PREVENT POLLUTION OF WETLANDS OR WATERCOURSES. THE PERMITTEE SHALL IMMEDIATELY INFORM THE WETLANDS OFFICER OF ANY PROBLEMS INVOLVING WETLANDS OR WATERCOURSES THAT HAVE DEVELOPED IN THE COURSE OF, OR THAT ARE CAUSED BY, THE AUTHORIZED WORK.

THE RESPONSIBLE CONTACT PERSON FOR THE INSTALLATION AND MAINTENANCE OR EROSION AND SEDIMENTATION CONTROLS ON THIS PROJECT WILL BE THE GENERAL CONTRACTOR. ONCE CONTRACTOR HAS BEEN SELECTED, INFORMATION WILL BE PROVIDED TO THE TOWN.

VEGETATIVE TURF ESTABLISHMENT PROCEDURE

SCARIFY ALL AREAS TO BE TOPSOILED AND SEEDED. APPLY A MINIMUM OF 4 INCHES OF TOPSOIL ON ALL AREAS TO BE SEEDED. APPLY GRASS SEED, LIME, FERTILIZER AND MULCH ACCORDING TO THE FOLLOWING SCHEDULE:

PERMANENT SEED MIXTURE:

CREEPING RED FESCUE	0.45 LBS. PER 1,000 SQ. FT.
REDTOP	0.05
TALL FESCUE	0.45
TOTAL	0.95

FERTILIZER:
10-10-10 APPLY AT 7.5 LBS. PER 1,000 SQ. FT.

LIMESTONE:
APPLY AT 150 LBS. PER 1,000 SQ. FT.

MULCHING:
SPREAD HAY OR STRAW OVER ALL AREAS AFTER SEEDING. USE 1 1/2 TO 2 BALES PER 1,000 SQ. FT.
TARGET FOR 100% COVERAGE. ANCHOR BY USING NETTING OR TRACKING AS NECESSARY.

SEEDING DATES:
SEEDING DATES IN CONNECTICUT ARE NORMALLY APRIL 1 THROUGH JUNE 15 AND AUGUST 15 THROUGH OCTOBER 1. SEED GERMINATION NORMALLY CANNOT BE EXPECTED FROM NOVEMBER THROUGH FEBRUARY. IF ADEQUATE SEED GERMINATION IS NOT POSSIBLE DUE TO TIME OF YEAR CONSTRAINTS, MULCHING SHALL BE ADEQUATELY PROVIDED TO PROTECT THE SEED FROM WIND AND SURFACE EROSION UNTIL THE WEATHER IMPROVES AND THE SEEDING BECOMES WELL ESTABLISHED.

A CONDITION OF ALL SEWER PERMITS FOR INSTALLING RESIDENTIAL SEWER CONNECTIONS IS THE REQUIREMENT TO FURNISH AND INSTALL A SEWER INSPECTION RISER IN THAT AREA OF THE STREET RIGHT-OF-WAY BETWEEN THE CURB AND THE STREETLINE (FRONT PROPERTY LINE). THE INSPECTION RISER IS TO CONSIST OF A 45° WYE FITTING INSTALLED ON THE HOUSE CONNECTION SEWER APPROXIMATELY 4 FEET BEHIND THE STANDARD CURB LOCATION*. A 6"ø PVC INSPECTION RISER PIPE IS TO BE INSTALLED TO WITHIN 12" OF THE FINISHED GROUND SURFACE AND FITTED WITH A WATERTIGHT PLUG. A 6"X6"X1/8" STEEL PLATE IS TO BE PLACED ABOVE THE END OF THE INSPECTION RISER WHEN BACKFILLING THE AREA TO GRADE TO ASSIST WITH FUTURE RECOVERY OF THE INSPECTION RISER BY MEANS OF A MAGNETIC DETECTOR.

*IN A SEWER EASEMENT THE INSPECTION RISER IS TO BE AT THE EDGE OF THE EASEMENT

*IN LOCATIONS WHERE AN EXISTING LATERAL EXTENDS TO THE STREET LINE, THE "Y" CONNECTION SHALL BE PLACED AS CLOSE TO THE STREET LINE AS POSSIBLE, WITH THE INSPECTION RISER EXTENDING TO WITHIN 12" OF GRADE AND LOCATED ON PRIVATE PROPERTY.

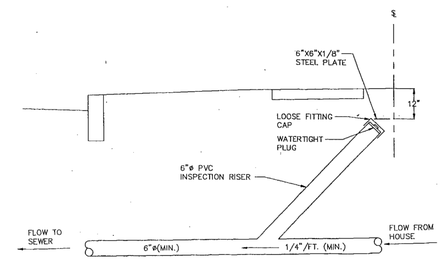

RESIDENTIAL CURB CONNECTION INSPECTION FACILITY (PER TOWN OF MILFORD)

NOT TO SCALE

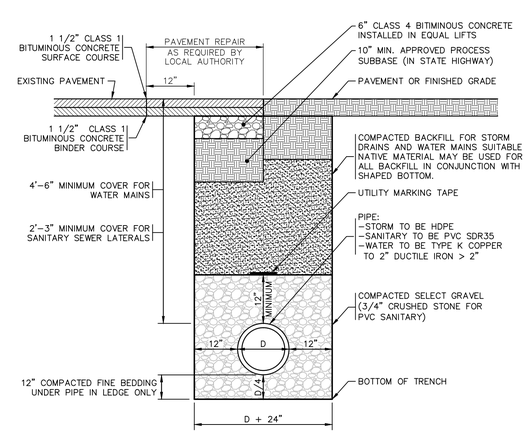

NOTES:

1. SELECT BACKFILL MATERIAL SHALL BE BANK-RUN GRAVEL GRADATION C, FORM 816, OR, PROCESSED AGGREGATE CAN BE USED IN LIEU OF BANK-RUN GRAVEL OR APPROVED NATIVE MATERIAL.
2. ALL MATERIALS AND CONSTRUCTION METHODS SHALL CONFORM TO CONNECTICUT DOT STANDARD SPECIFICATIONS FOR ROADS, BRIDGES AND INCIDENTAL CONSTRUCTION FORM 816, 2004 OR AS AMENDED.
3. ALL UTILITIES SHALL BE INSTALLED IN ACCORDANCE WITH ALL CITY OF MILFORD AND CUSTODIAL UTILITY COMPANY SPECIFICATIONS.
4. ALL PROPOSED MATERIALS SHALL BE INSTALLED AS SHOWN OR MATCH EXISTING CONDITIONS AS APPROVED BY THE TOWN.

TYPICAL TRENCH DETAIL

NOT TO SCALE

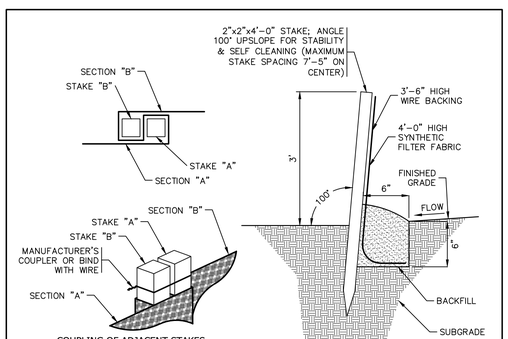

COUPLING OF ADJACENT STAKES

NOTES:

1. ALL SILT FENCE SHALL BE INSPECTED PERIODICALLY AND AFTER ALL RAINFALL EVENTS. REPAIRS SHALL BE MADE IMMEDIATELY TO KEEP THE SILTATION CONTROL BARRIER EFFECTIVE.

SILT FENCE BARRIER

NOT TO SCALE

PLAN PREPARED BY:
INDIGO LAND DESIGN, LLC
JOSEPH VIREN, P.E.
CT REG. NO. 21090
P.O. BOX 1036
OLD SAYBROOK, CT 06475
PHONE: (860) 202-0693
FAX: (860) 388-9343

THE EMBOSSED SEAL OF THE ENGINEER MUST BE AFFIXED HERE FOR THIS MAP TO BE VALID

E&S AND CONSTRUCTION DETAILS

PREPARED FOR STEVEN HELD

159 HILLSIDE AVENUE -- MAP 49 LOT 77

MILFORD, CONNECTICUT

DATE:	AUGUST 14, 2013
SCALE:	AS NOTED
DRAWN BY:	CH
CHKD BY:	SM, JW
DWG. NO.:	D-1
SHEET NO.:	2 of 2
JOB NO.:	2013-072

CONFIDENTIAL
PROPRIETARY INFORMATION

THE INFORMATION HEREIN IS OF A PROPRIETARY NATURE AND IS SUBMITTED IN CONFIDENCE FOR USE BY OUR CLIENTS ONLY. UNAUTHORIZED REPRODUCTION, PUBLICATION, DISTRIBUTIONOR DISSEMINATION, IN WHOLE OR IN PART, IS EXPRESSEDLY PROHIBITED. THE INFORMATION CONTAINED HEREIN IS AND REMAINS THE PROPERTY OF W. S. GARRICK ARCHITECTS, AND RECEIPT OR POSSESSION OF THIS INFORMATION CONFERS NO RIGHT IN OR LICENSE TO USE OR TO DISCLOSE TO OTHERS THE SUBJECT MATTER CONTAINED HEREIN FOR ANY BUT AUTHORIZED PURPOSES. ALL RIGHTS RESERVED.

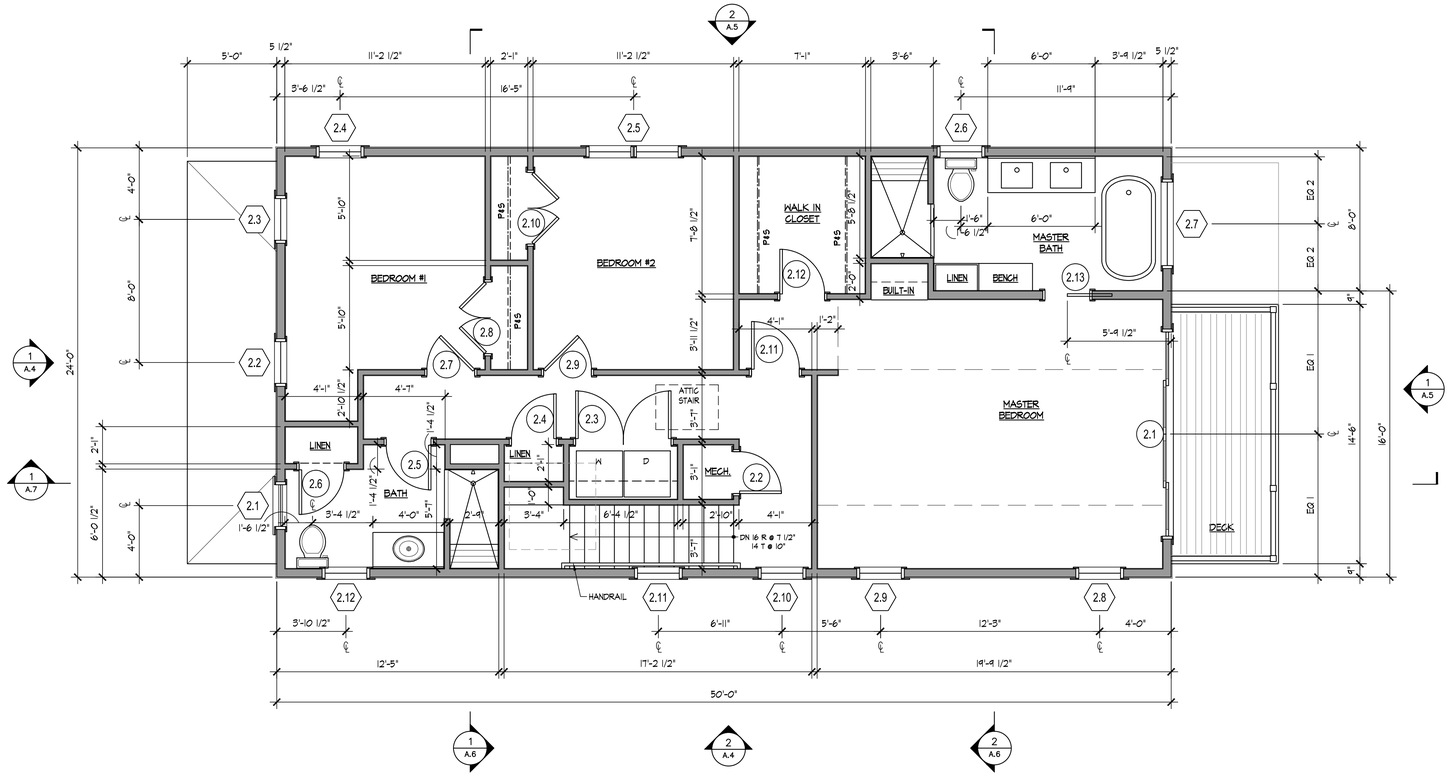

2 A.3 SECOND FLOOR PLAN

1/4"=1'-0"

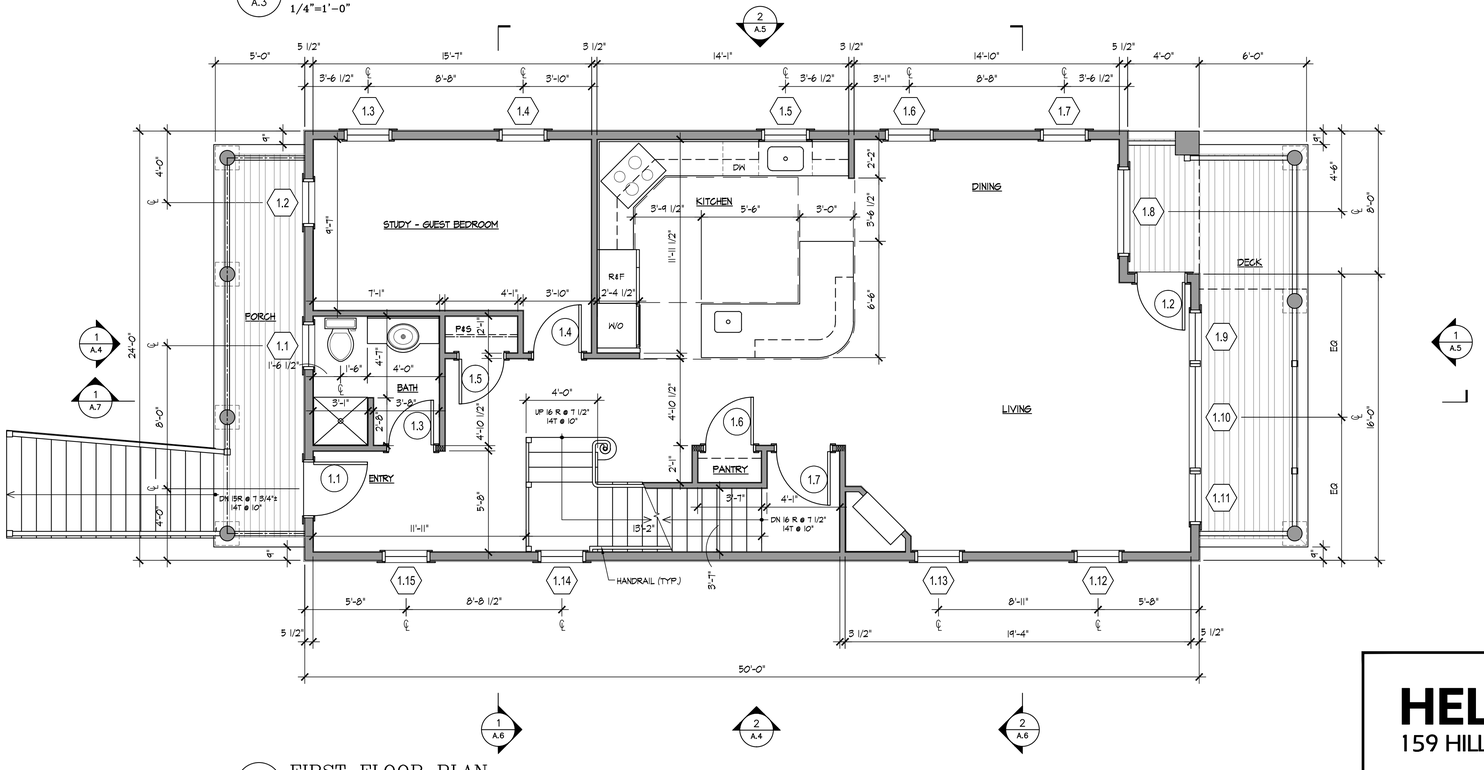

1 A.3 FIRST FLOOR PLAN

1/4"=1'-0"

FOR BUILDING PERMIT

Wayne S. Garrick A.I.A.
Architects
991 Whitney Avenue New Haven, Connecticut 06511
203 - 776 - 1874 fax 203 - 776 - 8002

Revisions:
12.30.13
5.8.14

Project Number: 1301
Scale: AS NOTED
Date: 05.07.2013
Drawn By: ZK
Checked By: WSG

HELD

159 HILLSIDE AVENUE MILFORD CT

N

A.3

CONFIDENTIAL
PROPRIETARY INFORMATION

THE INFORMATION HEREIN IS OF A PROPRIETARY NATURE AND IS SUBMITTED IN CONFIDENCE FOR USE BY OUR CLIENTS ONLY. UNAUTHORIZED REPRODUCTION, PUBLICATION, DISTRIBUTIONOR DISSEMINATION, IN WHOLE OR IN PART, IS EXPRESSEDLY PROHIBITED. THE INFORMATION CONTAINED HEREIN IS AND REMAINS THE PROPERTY OF W. S. GARRICK ARCHITECTS, AND RECEIPT OR POSSESSION OF THIS INFORMATION CONFERS NO RIGHT IN OR LICENSE TO USE OR TO DISCLOSE TO OTHERS THE SUBJECT MATTER CONTAINED HEREIN FOR ANY BUT AUTHORIZED PURPOSES. ALL RIGHTS RESERVED.

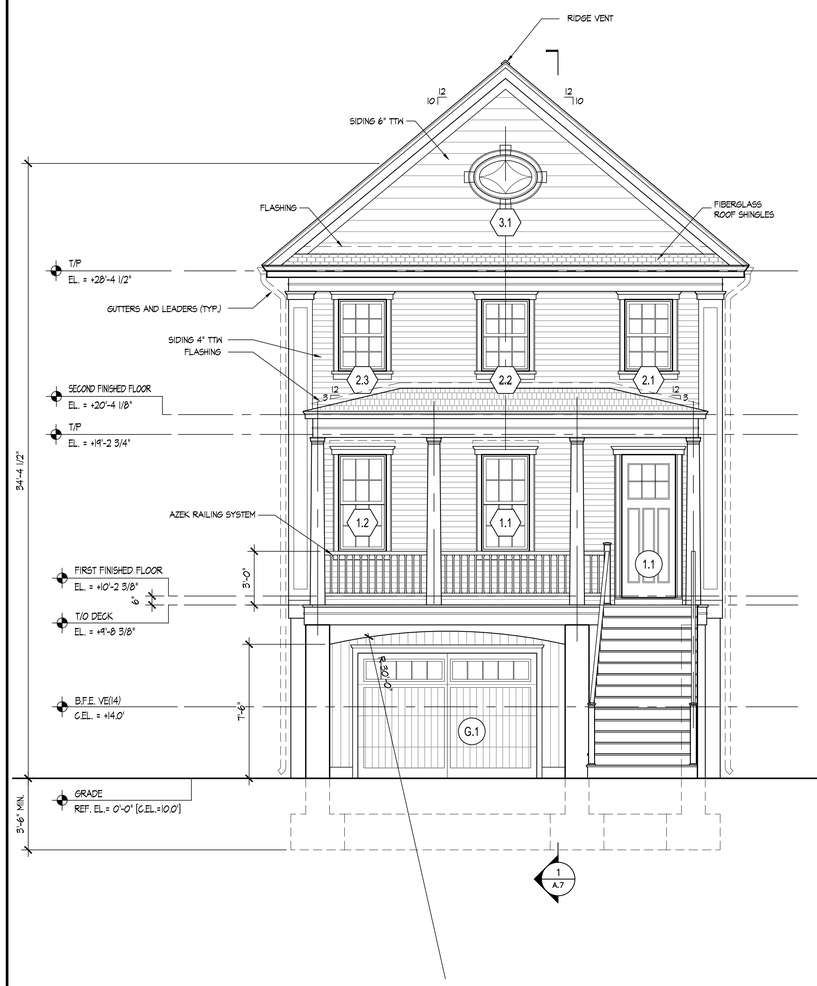

1 A.4 NORTH ELEVATION

1/4"=1'-0"

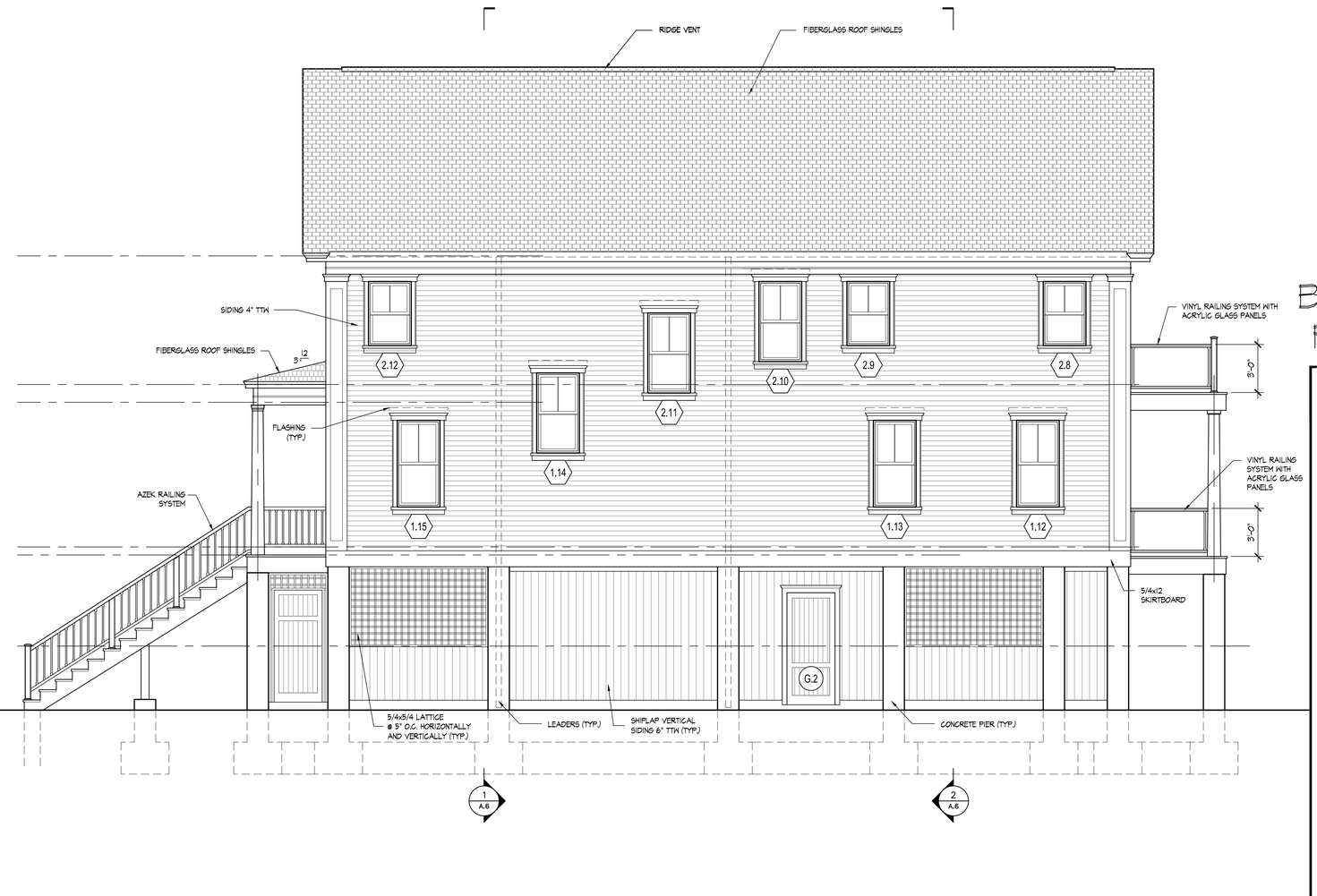

2 A.4 WEST ELEVATION

1/4"=1'-0"

FOR BUILDING PERMIT

Wayne S. Garrick A.I.A.
Architects
291 Whitney Avenue New Haven, Connecticut 06511
203 - 776 - 1814 fax 203 - 776 - 8002

Revisions:
12.30.13
5.8.14

Project Number: 1301
Scale: AS NOTED
Date: 05.07.2013
Drawn By: ZK
Checked By: WSG

HELD

159 HILLSIDE AVENUE MILFORD CT

A.4

CONFIDENTIAL
PROPRIETARY INFORMATION

THE INFORMATION HEREIN IS OF A PROPRIETARY NATURE AND IS SUBMITTED IN CONFIDENCE FOR USE BY OUR CLIENTS ONLY. UNAUTHORIZED REPRODUCTION, PUBLICATION, DISTRIBUTIONOR DISSEMINATION, IN WHOLE OR IN PART, IS EXPRESSEDLY PROHIBITED. THE INFORMATION CONTAINED HEREIN IS AND REMAINS THE PROPERTY OF W. S. GARRICK ARCHITECTS, AND RECEIPT OR POSSESSION OF THIS INFORMATION CONFERS NO RIGHT IN OR LICENSE TO USE OR TO DISCLOSE TO OTHERS THE SUBJECT MATTER CONTAINED HEREIN FOR ANY BUT AUTHORIZED PURPOSES. ALL RIGHTS RESERVED.

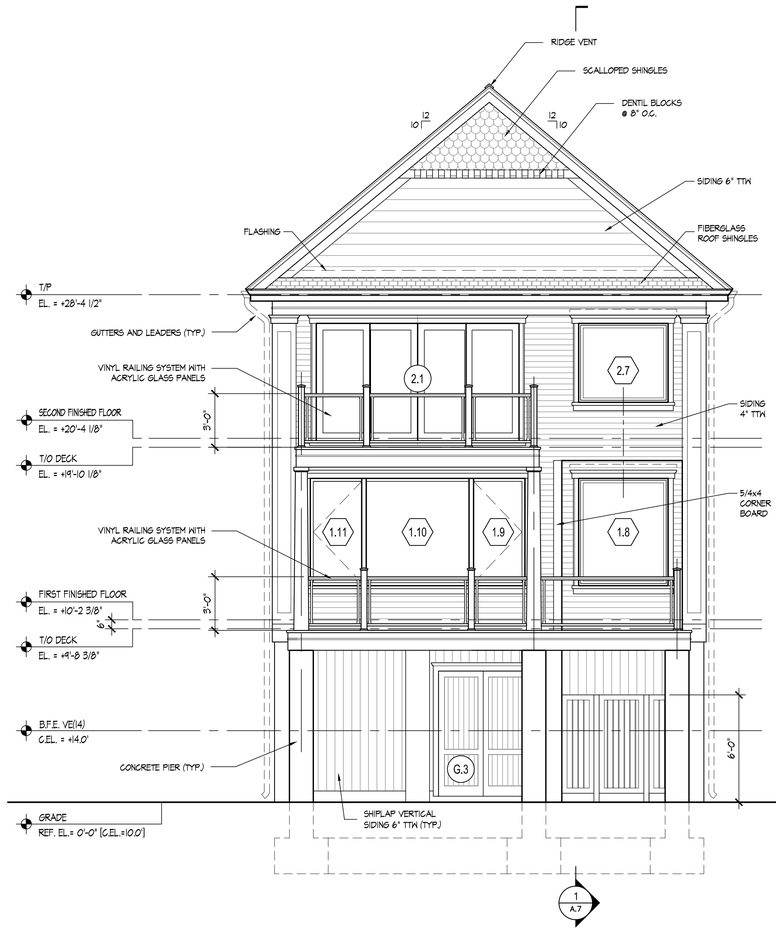

1 A.5 SOUTH ELEVATION

1/4"=1'-0"

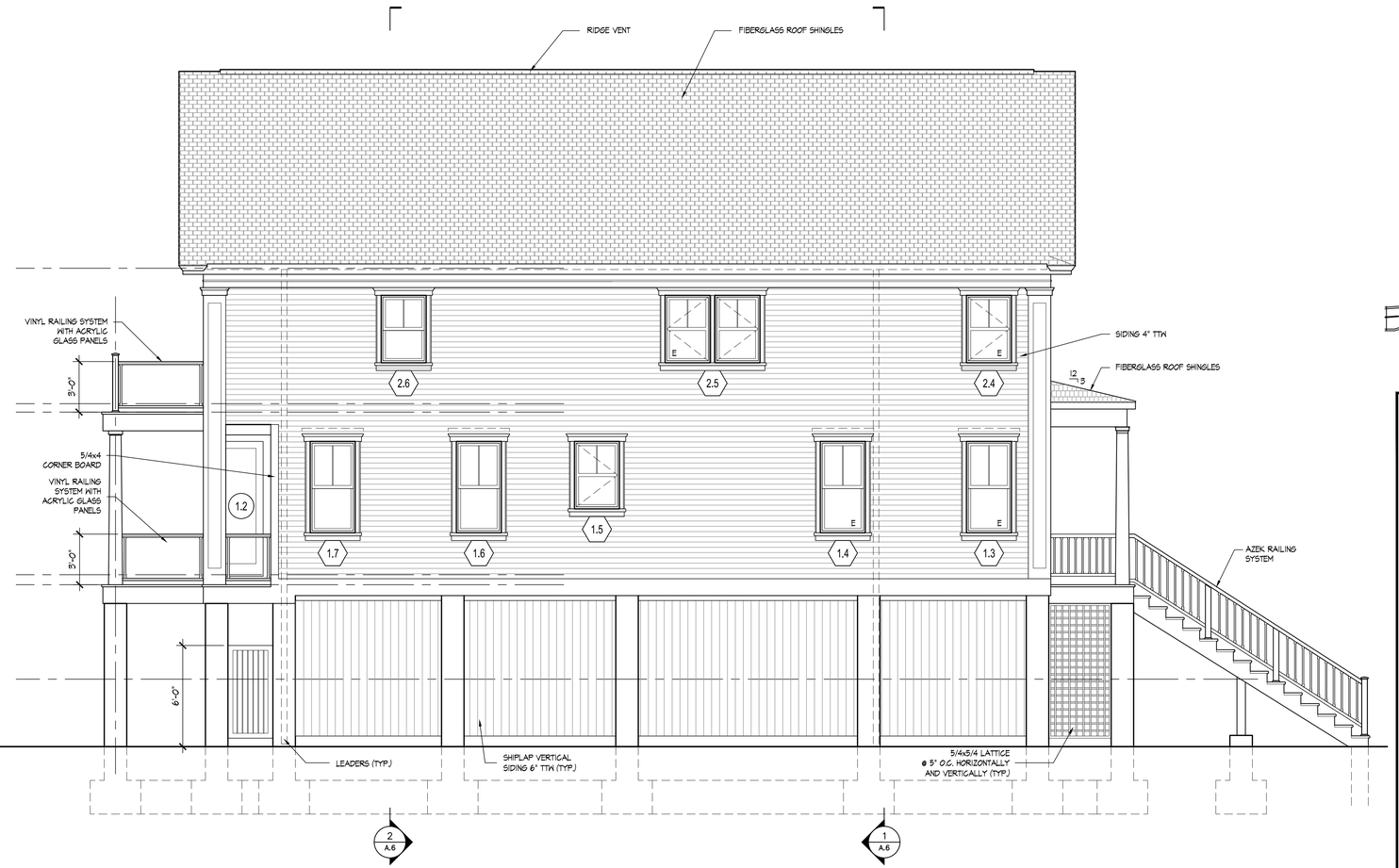

2 A.5 EAST ELEVATION

1/4"=1'-0"

FOR BUILDING PERMIT

Wayne S. Garrick A.I.A.
Architects
291 Whitney Avenue New Haven, Connecticut 06511
203 - 776 - 1674 fax 203 - 776 - 8002

Revisions-
12.30.13
5.8.14

Project Number: 1301
Scale: AS NOTED
Date: 05.07.2013
Drawn By: ZK
Checked By: WSG

HELD

159 HILLSIDE AVENUE MILFORD CT

A.5

CONFIDENTIAL
PROPRIETARY INFORMATION

THE INFORMATION HEREIN IS OF A PROPRIETARY NATURE AND IS SUBMITTED IN CONFIDENCE FOR USE BY OUR CLIENTS ONLY. UNAUTHORIZED REPRODUCTION, PUBLICATION, DISTRIBUTIONOR DISSEMINATION, IN WHOLE OR IN PART, IS EXPRESSEDLY PROHIBITED. THE INFORMATION CONTAINED HEREIN IS AND REMAINS THE PROPERTY OF W. S. GARRICK ARCHITECTS, AND RECEIPT OR POSSESSION OF THIS INFORMATION CONFERS NO RIGHT IN OR LICENSE TO USE OR TO DISCLOSE TO OTHERS THE SUBJECT MATTER CONTAINED HEREIN FOR ANY BUT AUTHORIZED PURPOSES. ALL RIGHTS RESERVED.

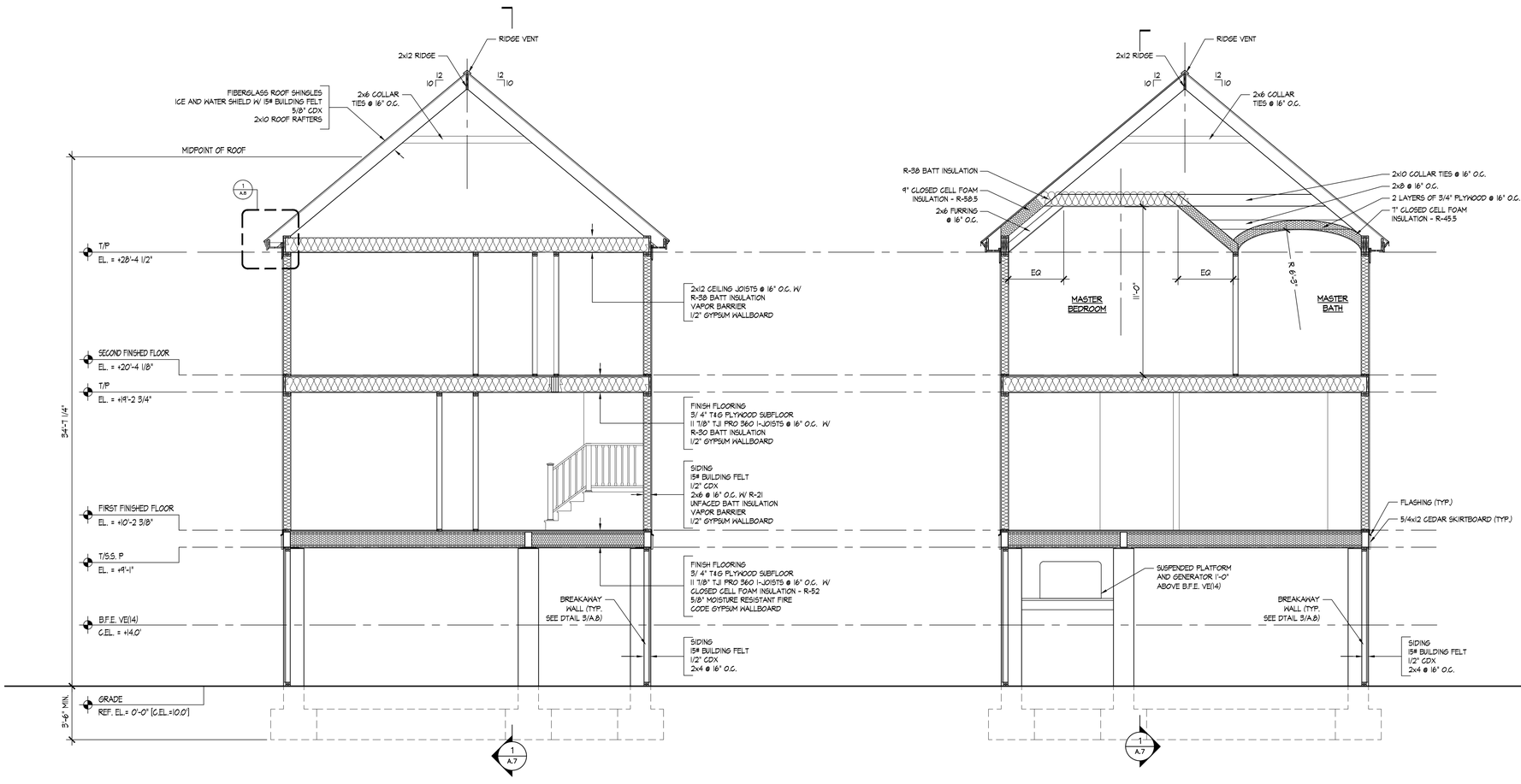

1 A.6 SECTION
1/4"=1'-0"

2 A.6 SECTION
1/4"=1'-0"

FOR
BUILDING
PERMIT

Wayne S. Garrick A.I.A.
Architects
991 Whitney Avenue New Haven, Connecticut 06511
203 - 776 - 1874 fax 203 - 776 - 8002

Revisions:
12.30.13
5.8.14

Project Number: 1301
Scale: AS NOTED
Date: 05.07.2013
Drawn By: ZK
Checked By: WSG

HELD
159 HILLSIDE AVENUE MILFORD CT

A.6

CONFIDENTIAL
PROPRIETARY INFORMATION

THE INFORMATION HEREIN IS OF A PROPRIETARY NATURE AND IS SUBMITTED IN CONFIDENCE FOR USE BY OUR CLIENTS ONLY. UNAUTHORIZED REPRODUCTION, PUBLICATION, DISTRIBUTIONOR DISSEMINATION, IN WHOLE OR IN PART, IS EXPRESSEDLY PROHIBITED. THE INFORMATION CONTAINED HEREIN IS AND REMAINS THE PROPERTY OF W. S. GARRICK ARCHITECTS, AND RECEIPT OR POSSESSION OF THIS INFORMATION CONFERS NO RIGHT IN OR LICENSE TO USE OR TO DISCLOSE TO OTHERS THE SUBJECT MATTER CONTAINED HEREIN FOR ANY BUT AUTHORIZED PURPOSES. ALL RIGHTS RESERVED.

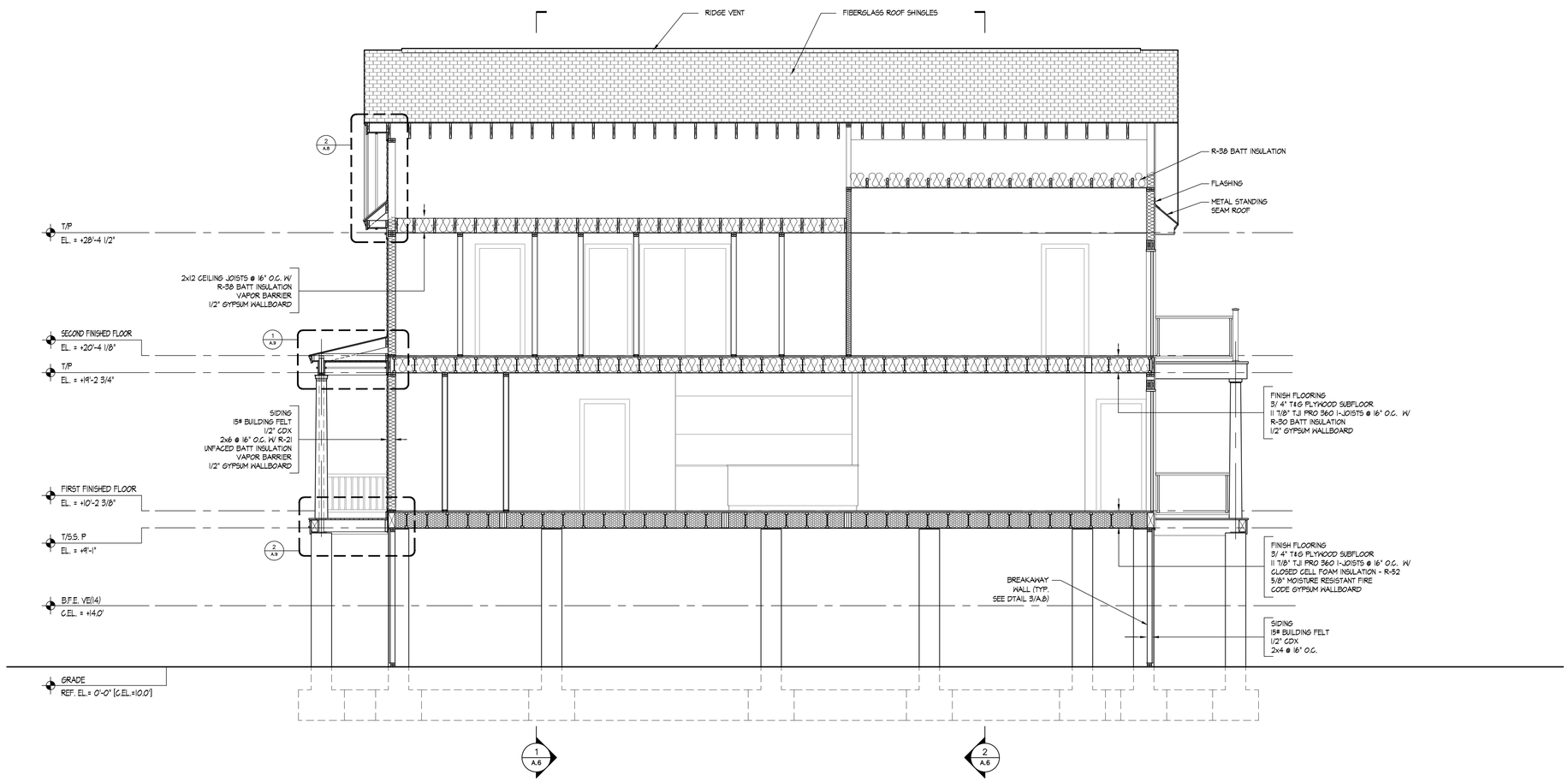

1 A.7 SECTION

1/4"=1'-0"

FOR BUILDING PERMIT

Wayne S. Garrick A.I.A.
Architects
291 Whitney Avenue New Haven, Connecticut 06511
203 - 776 - 1674 fax 203 - 776 - 8002

Revisions-
12.30.13
5.8.14

Project Number: 1301
Scale: AS NOTED
Date: 05.07.2013
Drawn By: ZK
Checked By: WSG

HELD

159 HILLSIDE AVENUE MILFORD CT

A.7

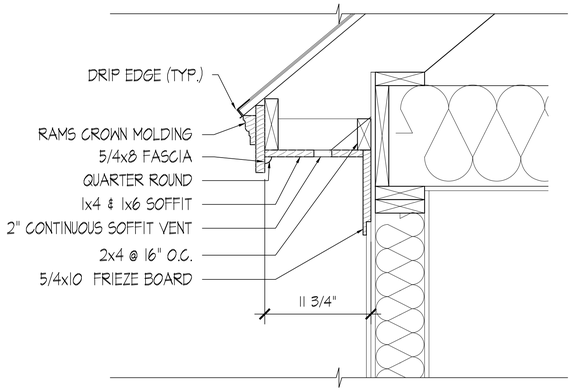

1 / A.8 SOFFIT DETAIL

1 1/2"=1'-0"

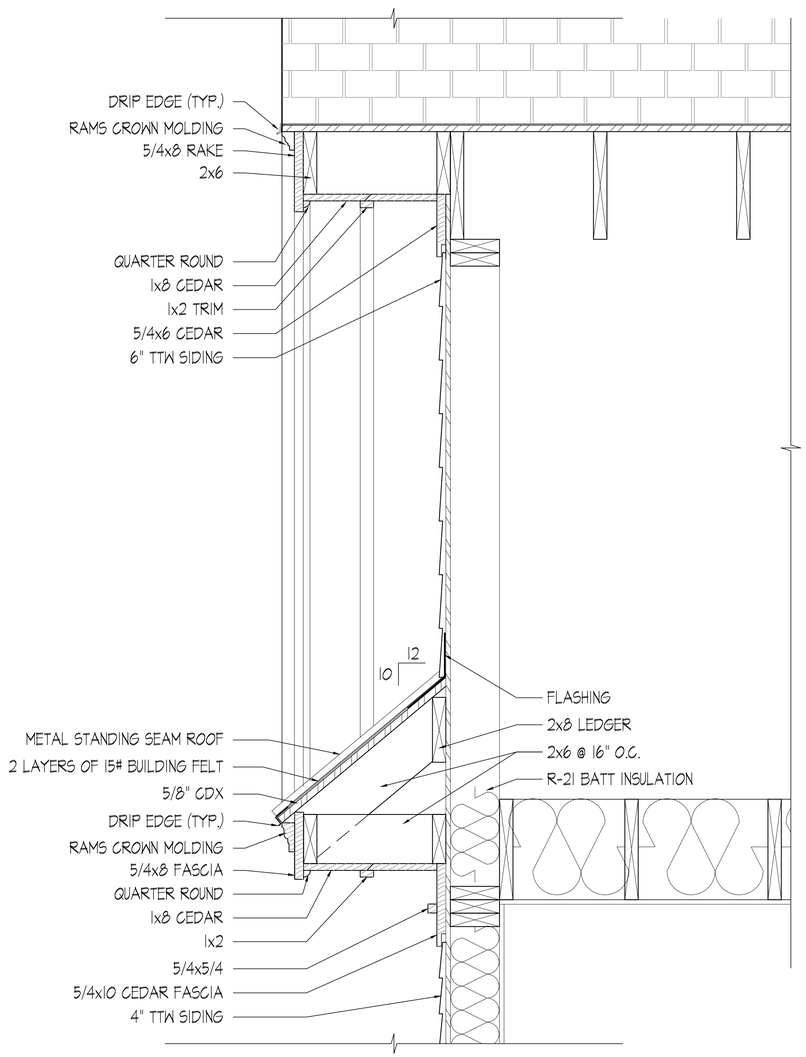

2 / A.8 ROOF DETAIL

1 1/2"=1'-0"

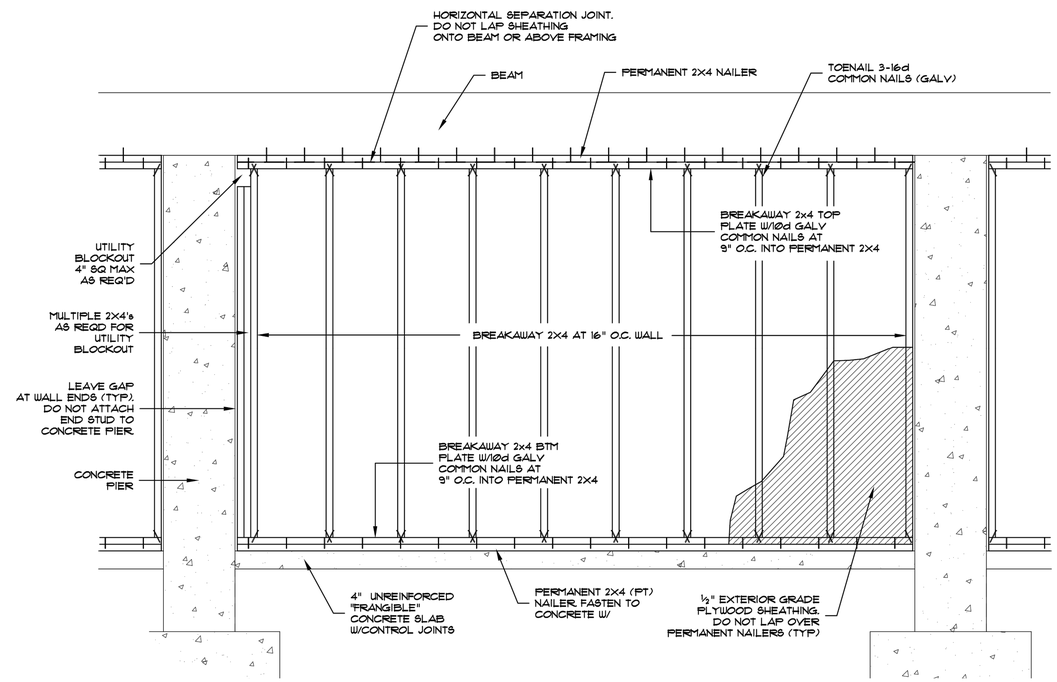

3 / A.8 BREAKAWAY WALL ELEVATION

3/4"=1'-0"

CONFIDENTIAL
PROPRIETARY INFORMATION

THE INFORMATION HEREIN IS OF A PROPRIETARY NATURE AND IS SUBMITTED IN CONFIDENCE FOR USE BY OUR CLIENTS ONLY. UNAUTHORIZED REPRODUCTION, PUBLICATION, DISTRIBUTIONOR DISSEMINATION, IN WHOLE OR IN PART, IS EXPRESSEDLY PROHIBITED. THE INFORMATION CONTAINED HEREIN IS AND REMAINS THE PROPERTY OF W. S. GARRICK ARCHITECTS, AND RECEIPT OR POSSESSION OF THIS INFORMATION CONFERS NO RIGHT IN OR LICENSE TO USE OR TO DISCLOSE TO OTHERS THE SUBJECT MATTER CONTAINED HEREIN FOR ANY BUT AUTHORIZED PURPOSES. ALL RIGHTS RESERVED.

FOR
BUILDING
PERMIT

Wayne S. Garrick A.I.A.
Architects
291 Whitney Avenue New Haven, Connecticut 06511
203 - 776 - 1874 fax 203 - 776 - 6002

Revisions:
12.30.13
5.8.14

Project Number: 1301
Scale: AS NOTED
Date: 05.07.2013
Drawn By: ZK
Checked By: WSG

HELD

159 HILLSIDE AVENUE MILFORD CT

A.8

CONFIDENTIAL
PROPRIETARY INFORMATION

THE INFORMATION HEREIN IS OF A PROPRIETARY NATURE AND IS SUBMITTED IN CONFIDENCE FOR USE BY OUR CLIENTS ONLY. UNAUTHORIZED REPRODUCTION, PUBLICATION, DISTRIBUTIONOR DISSEMINATION, IN WHOLE OR IN PART, IS EXPRESSEDLY PROHIBITED. THE INFORMATION CONTAINED HEREIN IS AND REMAINS THE PROPERTY OF W. S. GARRICK ARCHITECTS, AND RECEIPT OR POSSESSION OF THIS INFORMATION CONFERS NO RIGHT IN OR LICENSE TO USE OR TO DISCLOSE TO OTHERS THE SUBJECT MATTER CONTAINED HEREIN FOR ANY BUT AUTHORIZED PURPOSES. ALL RIGHTS RESERVED.

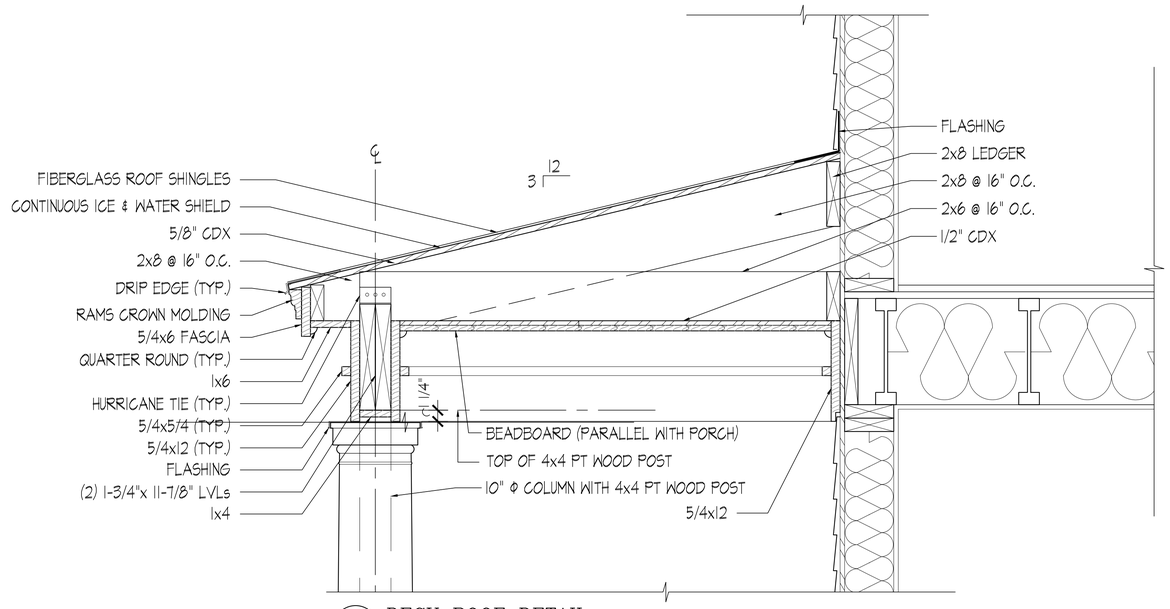

1 / A.9 DECK ROOF DETAIL
1 1/2"=1'-0"

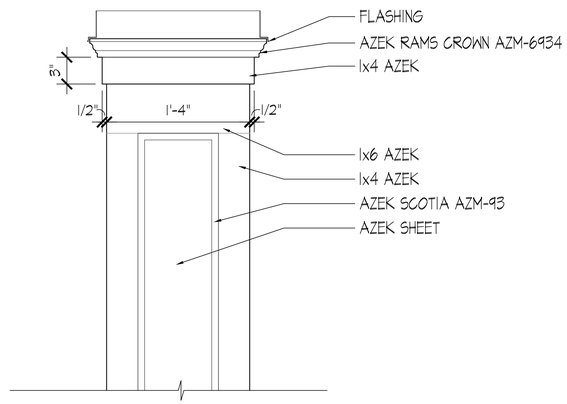

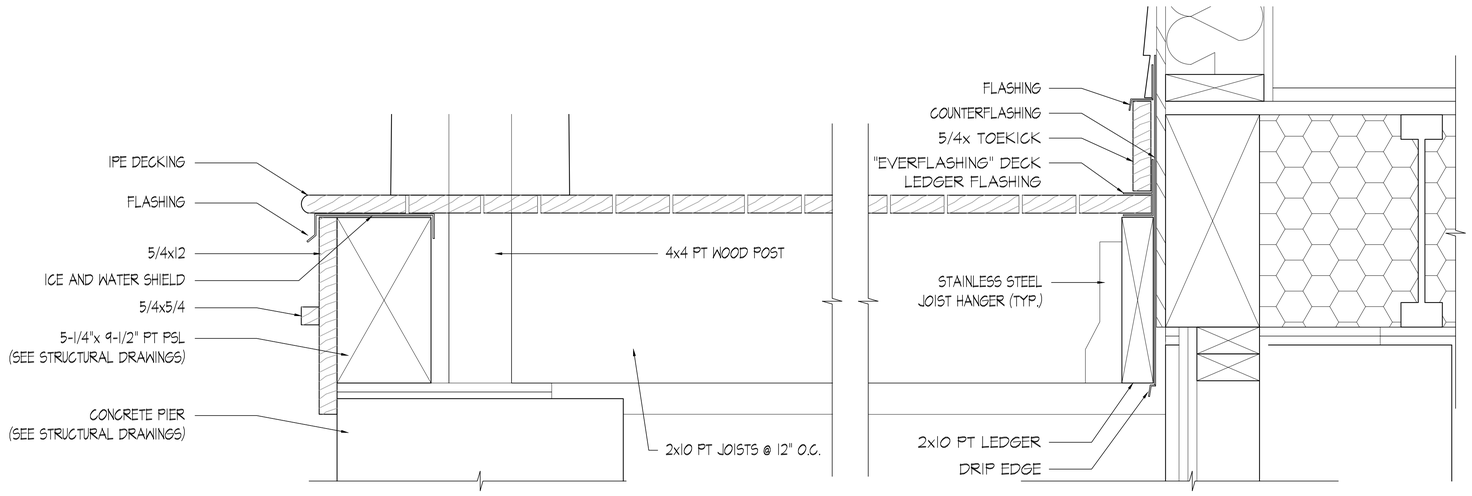

2 / A.9 DECK DETAIL
3"=1'-0"

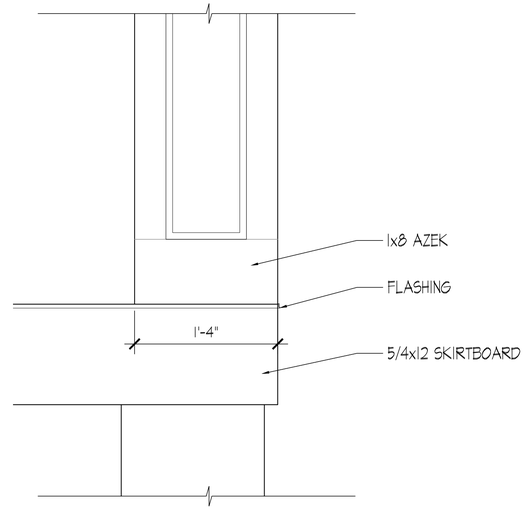

3 / A.9 PILASTER (TYP.)
3"=1'-0"

FOR BUILDING PERMIT

Wayne S. Garrick A.I.A.
Architects
991 Whitney Avenue New Haven, Connecticut 06511
203 - 776 - 1874 fax 203 - 776 - 8002

Revisions-
12.30.13
5.8.14

Project Number- 1301
Scale- AS NOTED
Date- 05.07.2013
Drawn By- ZK
Checked By- WSG

HELD
159 HILLSIDE AVENUE MILFORD CT

A.9

CONFIDENTIAL
PROPRIETARY INFORMATION

THE INFORMATION HEREIN IS OF A PROPRIETARY NATURE AND IS SUBMITTED IN CONFIDENCE FOR USE BY OUR CLIENTS ONLY. UNAUTHORIZED REPRODUCTION, PUBLICATION, DISTRIBUTIONOR DISSEMINATION, IN WHOLE OR IN PART, IS EXPRESSEDLY PROHIBITED. THE INFORMATION CONTAINED HEREIN IS AND REMAINS THE PROPERTY OF W. S. GARRICK ARCHITECTS, AND RECEIPT OR POSSESSION OF THIS INFORMATION CONFERS NO RIGHT IN OR LICENSE TO USE OR TO DISCLOSE TO OTHERS THE SUBJECT MATTER CONTAINED HEREIN FOR ANY BUT AUTHORIZED PURPOSES. ALL RIGHTS RESERVED.

WINDOW SCHEDULE

#	LOCATION	TYPE	MANUFACTURER	CAT. NO.	R.O.	REMARKS
1.1	BATH	DOUBLE-HUNG	ANDERSEN	TW2652	2'-8 1/8" x 5'-4 7/8"	1, 2, 4, 5, 6, 7, 9, 10, 11, 12
1.2	STUDY	DOUBLE-HUNG	ANDERSEN	TW2652	2'-8 1/8" x 5'-4 7/8"	1, 2, 4, 5, 6, 7, 9, 10, 11, 12
1.3	STUDY	DOUBLE-HUNG	ANDERSEN	TW2852	2'-10 1/8" x 5'-4 7/8"	1, 2, 3, 4, 5, 6, 7, 9, 10, 11, 12
1.4	STUDY	DOUBLE-HUNG	ANDERSEN	TW2852	2'-10 1/8" x 5'-4 7/8"	1, 2, 3, 4, 5, 6, 7, 9, 10, 11, 12
1.5	KITCHEN	CASEMENT	ANDERSEN	CX145	2'-8" x 4'-5 3/8"	1, 2, 4, 5, 8, 9, 10, 11, 14, 15
1.6	DINING	DOUBLE-HUNG	ANDERSEN	TW2652	2'-8" x 5'-4 7/8"	1, 2, 4, 5, 6, 8, 9, 10, 11, 12
1.7	DINING	DOUBLE-HUNG	ANDERSEN	TW2652	2'-8" x 5'-4 7/8"	1, 2, 4, 5, 6, 8, 9, 10, 11, 12
1.8	DINING	PICTURE	ANDERSEN	P5060	5'-0 3/8" x 6'-0 3/8"	1, 2, 5, 9, 10
1.9	LIVING	CASEMENT	ANDERSEN	CX16	2'-8" x 6'-0 3/8"	1, 2, 4, 5, 8, 9, 10, 15
1.10	LIVING	PICTURE	ANDERSEN	P6060	6'-0 3/8" x 6'-0 3/8"	1, 2, 5, 9, 10
1.11	LIVING	CASEMENT	ANDERSEN	CX16	2'-8" x 6'-0 3/8"	1, 2, 4, 5, 8, 9, 10, 15
1.12	LIVING	DOUBLE-HUNG	ANDERSEN	TW2652	2'-8" x 5'-4 7/8"	1, 2, 4, 5, 6, 8, 9, 10, 11, 12
1.13	LIVING	DOUBLE-HUNG	ANDERSEN	TW2652	2'-8" x 5'-4 7/8"	1, 2, 4, 5, 6, 8, 9, 10, 11, 12
1.14	STAIR	DOUBLE-HUNG	ANDERSEN	TW2646	2'-8" x 4'-8 7/8"	1, 2, 4, 5, 6, 7, 9, 10, 11, 12
1.15	ENTRY	DOUBLE-HUNG	ANDERSEN	TW2652	2'-8" x 5'-4 7/8"	1, 2, 4, 5, 6, 7, 9, 10, 11, 12
2.1	BATH	DOUBLE-HUNG	ANDERSEN	TW26310	2'-8" x 4'-0 7/8"	1, 2, 4, 5, 6, 7, 9, 10, 11, 12
2.2	BEDROOM #1	DOUBLE-HUNG	ANDERSEN	TW26310	2'-8" x 4'-0 7/8"	1, 2, 4, 5, 6, 7, 9, 10, 11, 12
2.3	BEDROOM #1	DOUBLE-HUNG	ANDERSEN	TW26310	2'-8" x 4'-0 7/8"	1, 2, 4, 5, 6, 7, 9, 10, 11, 12
2.4	BEDROOM #1	CASEMENT	ANDERSEN	CX14	2'-8" x 4'-0 1/2"	1, 2, 3, 4, 5, 7, 9, 10, 11, 15
2.5	BEDROOM #2	CASEMENT	ANDERSEN	CX24	5'-3 1/4" x 4'-0 1/2"	1, 2, 3, 4, 5, 7, 9, 10, 11, 15
2.6	MASTER BATH	DOUBLE-HUNG	ANDERSEN	TW26310	2'-8" x 4'-0 7/8"	1, 2, 4, 5, 6, 8, 9, 10, 11, 12
2.7	MASTER BATH	PICTURE	ANDERSEN	P5045	5'-0 3/8" x 4'-5 3/8"	1, 2, 5, 9, 10
2.8	MASTER BEDROOM	DOUBLE-HUNG	ANDERSEN	TW26310	2'-8" x 4'-0 7/8"	1, 2, 4, 5, 6, 8, 9, 10, 11, 12
2.9	MASTER BEDROOM	DOUBLE-HUNG	ANDERSEN	TW26310	2'-8" x 4'-0 7/8"	1, 2, 4, 5, 6, 8, 9, 10, 11, 12
2.10	HALL	DOUBLE-HUNG	ANDERSEN	TW2646	2'-8" x 4'-8 7/8"	1, 2, 4, 5, 6, 7, 9, 10, 11, 12
2.11	STAIR	DOUBLE-HUNG	ANDERSEN	TW2646	2'-8" x 4'-8 7/8"	1, 2, 4, 5, 6, 7, 9, 10, 11, 12
2.12	BATH	DOUBLE-HUNG	ANDERSEN	TW26310	2'-8" x 4'-0 7/8"	1, 2, 4, 5, 6, 7, 9, 10, 11, 12
3.1	ATTIC	FIXED	ANDERSEN	OVL2030	3'-0" x 2'-0"	1, 2, 5, 11, 16

KEY

1. EXTERIOR: VINYL CLAD
2. INTERIOR FRAME: WOOD - NATURAL
3. EGRESS
4. HARDWARE: WHITE
5. GLAZING: INSULATING LOW-E4, IMPACT RESISTANT
6. PERFORMANCE GRADE UPGRADE
7. SCREENS: CHARCOAL MESH, WHITE FRAME
8. TRU SCENE, WHITE FRAME
9. INTERIOR CASING: SEE SPECIFICATION
10. EXTERIOR CASING: SEE SPECIFICATION
11. FULL DIVIDED LIGHT
12. JAMB-LINER - WHITE
13. TILE JAMBS AND CASING
14. CHECK RAIL
15. CORROSION - RESISTANT COMPONENTS
16. KEY BLOCK KIT INSTALLATION

NOTES: MANUFACTURER AND GENERAL CONTRACTOR TO SUBMIT SHOP DRAWINGS TO ARCHITECT FOR REVIEW PRIOR TO ORDER AND FABRICATION. ALL WINDOWS TO BE SET IN COPPER PAN, FABRIGATED WITH SOLDERED JOINTS AND SEAMS.

DOOR SCHEDULE

#	LOCATION	SIZE	MANUFACTURER	CAT. NO.	HARDWARE	REMARKS
6.1	GARAGE	10'-0" x 7'-0"				PROVIDE AN ALLOWANCE OF $2500. AND OPERATOR WITH FLOOD SENSOR
6.2	GARAGE	3'-0" x 7'-0"	JELD WEN	AP-24	1, 3, 4, 8, 12	
6.3	GARAGE	5'-0" x 7'-0"	JELD WEN	AP-24	1, 3, 4, 6, 8, 11, 12, 20	
1.1	ENTRY	3'-0" x 8'-0" x 1 3/4"	SIMPSON	7662	1A, 4, 5, 7, 15, 18, 19	PROVIDE A HARDWARE ALLOWANCE OF $600.
1.2	LIVING	2'-8" x 8'-0"	ANDERSEN	FWH 2480 AL	5, 19, 21	
1.3	BATH	2'-6" x 7'-0" x 1 3/8"	MASONITE	2 PANEL	1, 2, 4, 7	
1.4	STUDY	2'-8" x 7'-0" x 1 3/8"	MASONITE	2 PANEL	1, 3, 4, 7	
1.5	STUDY	2'-6" x 7'-0" x 1 3/8"	MASONITE	2 PANEL	1, 3, 4, 8	
1.6	PANTRY	2'-8" x 7'-0" x 1 3/8"	MASONITE	2 PANEL	1, 3, 4, 8	
1.7	STAIR	3'-0" x 7'-0" x 1 3/8"	SIMPSON	3 PANEL	1, 3, 4, 7, 12, 15	
2.1	MASTER BEDROOM	11'-4" x 6'-11"	ANDERSEN	FWG 120611-4	5, 19, 21	
2.2	MECHANICAL	2'-4" x 6'-8" x 1 3/8"	MASONITE	2 PANEL	1, 3, 4, 8	
2.3	LAUNDRY	2- 2'-8" x 6'-8" x 1 3/8"	MASONITE	2 PANEL	1, 4, 8, 11 (2), 13, 20	
2.4	LINEN	2'-6" x 6'-8" x 1 3/8"	MASONITE	2 PANEL	1, 3, 4, 8	
2.5	BATH	2'-6" x 6'-8" x 1 3/8"	MASONITE	2 PANEL	1, 2, 4, 8	
2.6	BATH	2'-6" x 6'-8" x 1 3/8"	MASONITE	2 PANEL	1, 3, 4, 8	
2.7	BEDROOM #1	2'-8" x 6'-8" x 1 3/8"	MASONITE	2 PANEL	1, 3, 4, 8	
2.8	BEDROOM #1	2- 2'-0" x 6'-8" x 1 3/8"	MASONITE	2 PANEL	1, 4, 8, 10, 13, 20	
2.9	BEDROOM #2	2'-8" x 6'-8" x 1 3/8"	MASONITE	2 PANEL	1, 3, 4, 7	
2.10	BEDROOM #2	2- 2'-0" x 6'-8" x 1 3/8"	MASONITE	2 PANEL	1, 4, 8, 10, 13, 20	
2.11	MASTER BEDROOM	2'-8" x 6'-8" x 1 3/8"	MASONITE	2 PANEL	1, 3, 4, 7	
2.12	WALK IN CLOSET	2'-6" x 6'-8" x 1 3/8"	MASONITE	2 PANEL	1, 3, 4, 8	
2.13	MASTER BATH	2'-6" x 6'-8" x 1 3/8"	MASONITE	2 PANEL	10A, 10B, 17	

SUBMIT SHOP DRAWINGS/PRODUCT LITERATURE PRIOR TO FABRIGATION/ORDER TO ARCHITECT FOR REVIEW
A. MASONITE - MOLDED 2 PANEL, RAISED, SMOOTH, "SAFE AND SOUND", SOLID CORE.
B. ALL EXTERIOR DOORS INSTALLED IN FABRIGATED, COPPER METAL PAN WITH SOLDERED SEAMS AND JOINTS.

KEY

1. 1-1/2 PAIR BUTTS
1A. 2 PAIR BUTTS
2. PRIVACY SET
3. PASSAGE SET
4. SOLID WOOD FRAME - PRE-HUNG
5. GLAZING: CLEAR INSULATING, LOW E4, IMPACT RESISTANT
6. SURFACE BOLT TOP & BOTTOM (INACTIVE PANEL)
7. BASE MOUNTED DOOR STOP
8. HINGE MOUNTED DOOR STOP
10. PULL(S)
10A. EDGE PULL
10B. PULL FLUSH
11. DUMMY SET
12. DEAD BOLT
13. ROLLER CATCH (EACH)
15. WEATHERSTRIPPING
16. CLOSER
17. POCKET DOOR HARDWARE
18. MORTISE LOCK - LATCH SET
19. METAL PAN
20. ASTRAGAL
21. MANUFACTURER'S STANDARD HARDWARE - WHITE

FOR BUILDING PERMIT

Wayne S. Garrick A.I.A.
Architects
991 Whitney Avenue New Haven, Connecticut 06511
203 - 776 - 1874 fax 203 - 776 - 8032

Revisions-
12.30.13
5.8.14

Project Number- 1301
Scale- AS NOTED
Date- 05.07.2013
Drawn By: ZK
Checked By: WSG

HELD
159 HILLSIDE AVENUE MILFORD CT

A.10

CONFIDENTIAL
PROPRIETARY INFORMATION

THE INFORMATION HEREIN IS OF A PROPRIETARY NATURE AND IS SUBMITTED IN CONFIDENCE FOR USE BY OUR CLIENTS ONLY. UNAUTHORIZED REPRODUCTION, PUBLICATION, DISTRIBUTIONOR DISSEMINATION, IN WHOLE OR IN PART, IS EXPRESSEDLY PROHIBITED. THE INFORMATION CONTAINED HEREIN IS AND REMAINS THE PROPERTY OF W. S. GARRICK ARCHITECTS, AND RECEIPT OR POSSESSION OF THIS INFORMATION CONFERS NO RIGHT IN OR LICENSE TO USE OR TO DISCLOSE TO OTHERS THE SUBJECT MATTER CONTAINED HEREIN FOR ANY BUT AUTHORIZED PURPOSES. ALL RIGHTS RESERVED.

FINISH SCHEDULE

FLOOR	ROOM	SUBFLOOR	FINISH FLOOR	WALLS N	WALLS S	WALLS E	WALLS W	BASE	CLNG	REMARKS
GROUND FLOOR	GARAGE	16	10	1	1	1	1		6/7	
FIRST FLOOR	ENTRY	2	3	12/7	12/7	12/7	12/7	8/7	12/7	
	BATH	2	11/4	13/7	13/7	13/7	13/7	8/7	12/7	SHOWER - WALLS AND CEILING: 5/4, FLOOR: 4
	STUDY-GUEST BEDROOM	2	3	12/7	12/7	12/7	12/7	8/7	12/7	
	HALL	2	3	12/7	12/7	12/7	12/7	8/7	12/7	
	KITCHEN	2	3	12/7	12/7	12/7	12/7	8/7	12/7	
	LIVING-DINING	2	3	12/7	12/7	12/7	12/7	8/7	12/7	
SECOND FLOOR	HALL	2	3	12/7	12/7	12/7	12/7	8/7	12/7	
	MECHANICAL	2	3	6/7	6/7	6/7	6/7	8/7	6/7	
	LAUNDRY	2	11/4	13/7	13/7	13/7	13/7	8/7	12/7	
	BATH	2	11/4	13/7	13/7	13/7	13/7	8/7	12/7	SHOWER - WALLS AND CEILING: 5/4, FLOOR: 4
	BEDROOM #1	2	3	12/7	12/7	12/7	12/7	8/7	12/7	
	BEDROOM #2	2	3	12/7	12/7	12/7	12/7	8/7	12/7	
	MASTER BEDROOM	2	3	12/7	12/7	12/7	12/7	8/7	12/7	
	MASTER BATH	2	11/4	13/7	13/7	13/7	13/7	8/7	12/7	SHOWER - WALLS AND CEILING: 5/4, FLOOR: 4
	WALK IN CLOSET	2	3	12/7	12/7	12/7	12/7	8/7	12/7	

KEY

1. EXPOSED CONSTRUCTION
2. 3/4" T&G SUB-FLOOR
3. HARDWOOD
4. TILE
5. 1/2" CEMENT BOARD
6. 5/8" FIRE CODE MOISTURE RESISTANT GYPSUM WALLBOARD - TYPE 'X'
7. PAINT
8. ALIGN WOOD BASE
9. TILE BASE
10. CONCRETE
11. 1/2" PTS
12. 1/2" GWB
13. 1/2" MOISTURE RESISTANT GWB
14. SEALER
15. CROWN MOLDING
16. 3/4" CRUSHED STONE

LIGHTING SCHEDULE

SYMBOL	TYPE	MANUFACT.	CAT. NO.	LAMP	REMARKS
R	RECESSED	LIGHTOLIER	10041CX/1005WH	65W BR30	
R1	RECESSED	LIGHTOLIER	2000AIC/2005KH	50W R20	
SC	SCONCE	-	-	-	PROVIDE AN ALLOWANCE OF $150. EACH
P	PENDANT	-	-	-	PROVIDE AN ALLOWANCE OF $200. EACH
SH	RECESSED SHOWER	LIGHTOLIER	1004 ICX/ 1021	40W A19	
CH	CHANDELIER	-	-	-	PROVIDE AN ALLOWANCE OF $600. EACH
SUR	SURFACE	-	-	-	PROVIDE AN ALLOWANCE OF $150. EACH
SP2	DOUBLE HEAD SPOT	RAB-QUARTZ	QB2W	75W	
EXT	SCONCE	-	-	-	PROVIDE AN ALLOWANCE OF $200. EACH
EF	EXHAUST FAN	PANASONIC	FV15VQL5	-	
UC UC	UNDER-CABINET	-	-	-	PROVIDED BY KITCHEN CABINET CONSULTANT, INSTALLED BY ELECTRICIAN
FL	FLUORESCENT	COLUMBIA	W2117EU	17W	
TR	TRACK	TECH	8' WITH 6" STAND-OFFS	MR-16	RECTANGULAR POWER FEED. 4 HEADS/ TRACK. ALLOWANCE OF $100./ HEAD
DL	DECK LIGHT	PROGRESS	SKU: P5205-31	60 W	
EXT	EXTERIOR SCONCE				

KEY

- DUPLEX
- GFI GROUND FAULT INTERUPT
- WP WEATHERPROOF DUPLEX RECEPTACLE
- QUAD
- CABLE
- TELEPHONE
- S SWITCH
- S D SWITCH WITH DIMMER
- S 3 SWITCH 3-WAY
- S D3 SWITCH 3-WAY WITH DIMMER
- FO FLOOR OUTLET
- SD SMOKE DETECTOR (WITH BATTERY BACK-UP)
- SD/CO COMBINATION: SMOKE AND CARBON MONOXIDE DETECTOR (WITH BATTERY BACK-UP)

FOR BUILDING PERMIT

Wayne S. Garrick A.I.A.
Architects
891 Whitney Avenue New Haven, Connecticut 06511
203 · 776 · 1874 fax 203 · 776 · 8002

Revisions:
12.30.13
5.8.14

Project Number: 1301
Scale: AS NOTED
Date: 05.07.2013
Drawn By: ZK
Checked By: WSG

HELD
159 HILLSIDE AVENUE MILFORD CT

A.11

CONFIDENTIAL
PROPRIETARY INFORMATION

THE INFORMATION HEREIN IS OF A PROPRIETARY NATURE AND IS SUBMITTED IN CONFIDENCE FOR USE BY OUR CLIENTS ONLY. UNAUTHORIZED REPRODUCTION, PUBLICATION, DISTRIBUTIONOR DISSEMINATION, IN WHOLE OR IN PART, IS EXPRESSEDLY PROHIBITED. THE INFORMATION CONTAINED HEREIN IS AND REMAINS THE PROPERTY OF W. S. GARRICK ARCHITECTS, AND RECEIPT OR POSSESSION OF THIS INFORMATION CONFERS NO RIGHT IN OR LICENSE TO USE OR TO DISCLOSE TO OTHERS THE SUBJECT MATTER CONTAINED HEREIN FOR ANY BUT AUTHORIZED PURPOSES. ALL RIGHTS RESERVED.

NOTE: ALL SWITHES AND OUTLETS TO BE ABOVE BASE FLOOD ELEVATION B.F.E. VE(14)

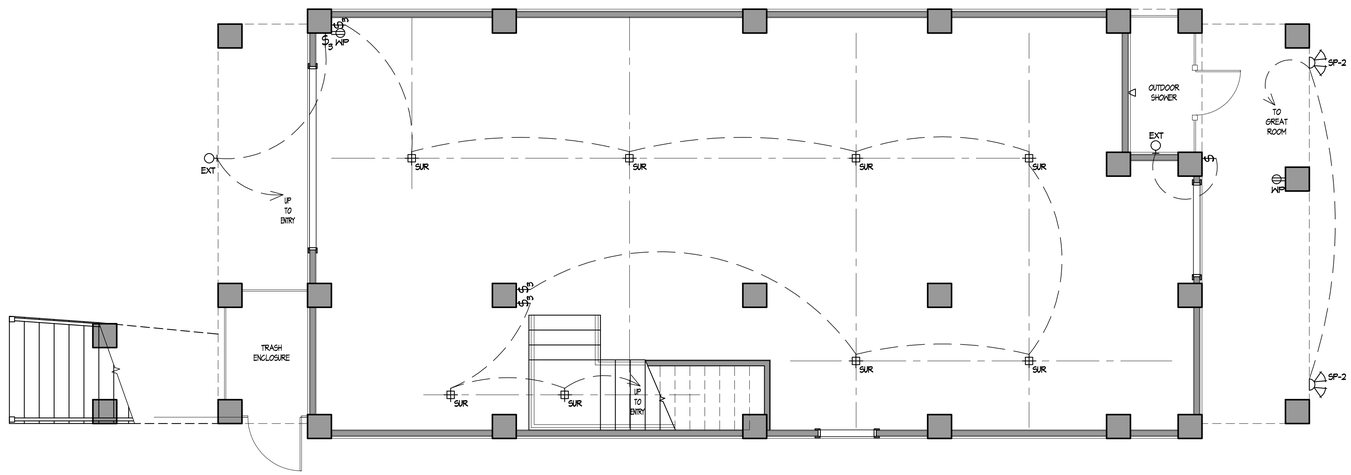

1 / A.12 GROUND FLOOR LIGHTING PLAN

1/4"=1'-0"

FOR BUILDING PERMIT

Wayne S. Garrick A.I.A.
Architects
291 Ulbrich Avenue New Haven, Connecticut 06511
203 · 776 · 1874 fax 203 · 776 · 8002

Revisions:
12.30.13
5.8.14

Project Number: 1301
Scale: 1/4" NOTED
Date: 05.07.2013
Drawn By: ZK
Checked By: WSG

HELD

159 HILLSIDE AVENUE MILFORD CT

N

A.12

CONFIDENTIAL
PROPRIETARY INFORMATION

THE INFORMATION HEREIN IS OF A PROPRIETARY NATURE AND IS SUBMITTED IN CONFIDENCE FOR USE BY OUR CLIENTS ONLY. UNAUTHORIZED REPRODUCTION, PUBLICATION, DISTRIBUTIONOR DISSEMINATION, IN WHOLE OR IN PART, IS EXPRESSEDLY PROHIBITED. THE INFORMATION CONTAINED HEREIN IS AND REMAINS THE PROPERTY OF W. S. GARRICK ARCHITECTS, AND RECEIPT OR POSSESSION OF THIS INFORMATION CONFERS NO RIGHT IN OR LICENSE TO USE OR TO DISCLOSE TO OTHERS THE SUBJECT MATTER CONTAINED HEREIN FOR ANY BUT AUTHORIZED PURPOSES. ALL RIGHTS RESERVED.

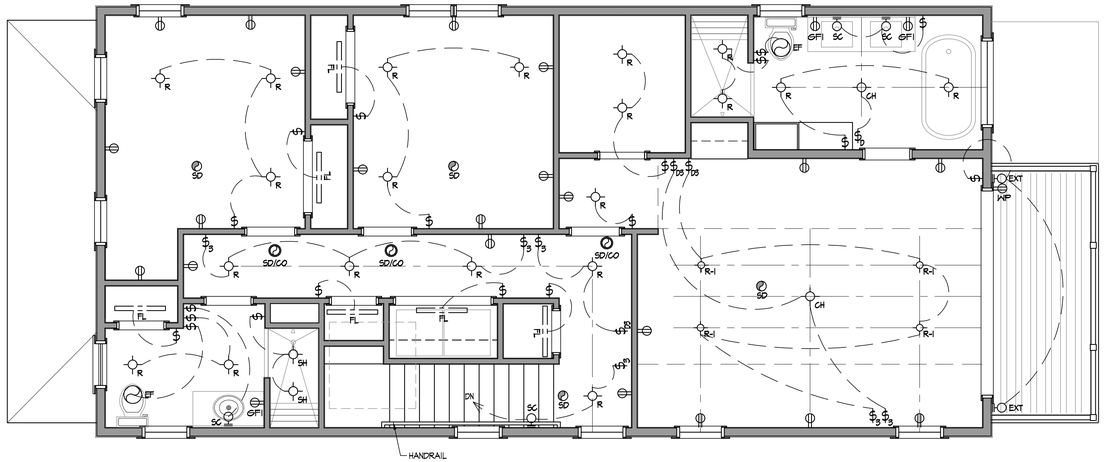

2 A.13 SECOND FLOOR LIGHTING PLAN

1/4"=1'-0"

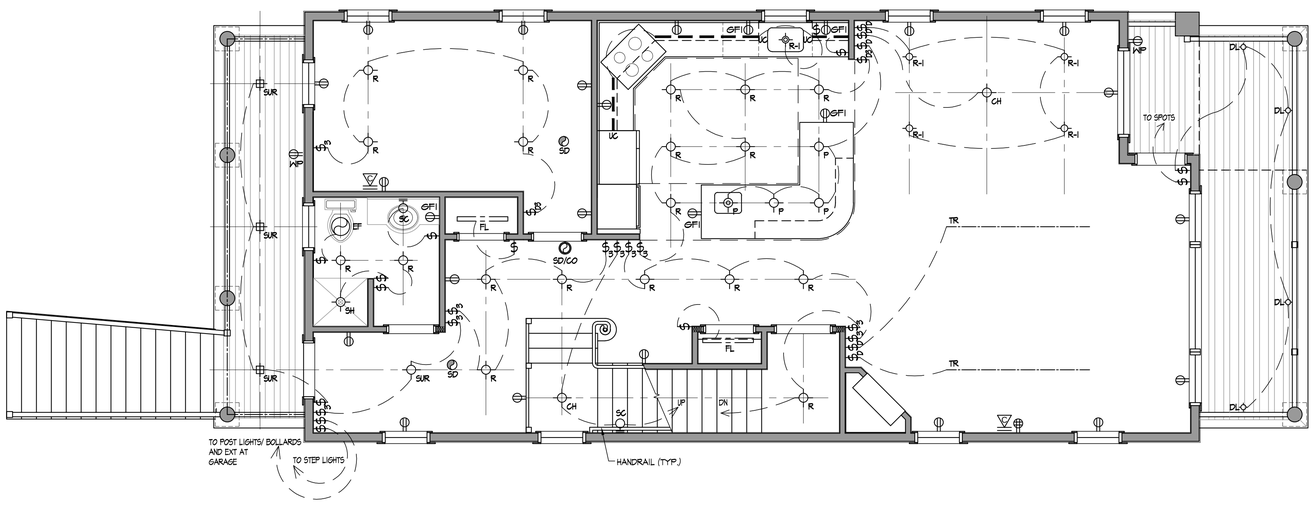

1 A.13 FIRST FLOOR LIGHTING PLAN

1/4"=1'-0"

FOR BUILDING PERMIT

Wayne S. Garrick A.I.A.
Architects
291 Whitney Avenue New Haven, Connecticut 06511
203 - 776 - 1874 fax 203 - 776 - 8002

Revisions:
12.30.13
5.8.14

Project Number: 1301
Scale: AS NOTED
Date: 05.07.2013
Drawn By: ZK
Checked By: WSG

HELD

159 HILLSIDE AVENUE MILFORD CT

N

A.13

CONFIDENTIAL
PROPRIETARY INFORMATION

THE INFORMATION HEREIN IS OF A PROPRIETARY NATURE AND IS SUBMITTED IN CONFIDENCE FOR USE BY OUR CLIENTS ONLY. UNAUTHORIZED REPRODUCTION, PUBLICATION, DISTRIBUTION, IN WHOLE OR IN PART, IS EXPRESSLY PROHIBITED. THE INFORMATION CONTAINED HEREIN IS AND REMAINS THE PROPERTY OF THOMAS K. GILLESPIE, PE, LLC AND RECEIPT OR POSSESSION OF THIS INFORMATION CONFERS NO RIGHT IN OR LICENSE TO USE OR TO DISCLOSE TO OTHERS THE SUBJECT MATTER CONTAINED HEREIN FOR ANY BUT AUTHORIZED PURPOSES. ALL RIGHTS RESERVED.

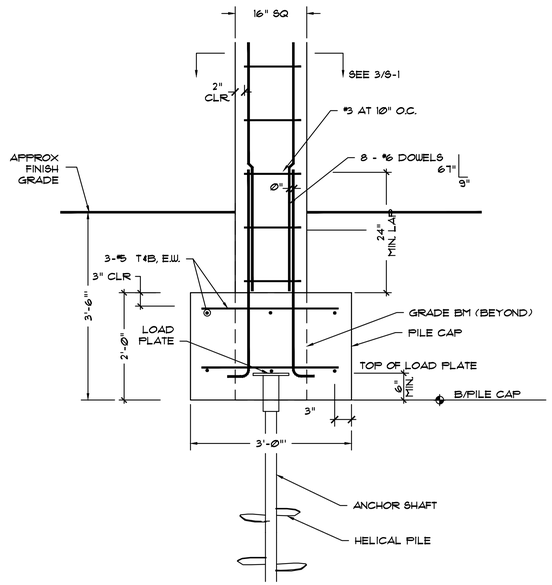

1 / S-1 COLUMN PIER / PILE CAP
SCALE: 3/4" = 1'-0"

HELICAL SCREW ANCHOR PILES

P1. ALL PILES SHALL BE PATENTED HELICAL PILES AND APPURTENANCES. ALL HELICAL PILES ARE TO BE INSTALLED BY A FACTORY CERTIFIED INSTALLER.

P2. A CONNECTICUT REGISTERED PROFESSIONAL ENGINEER SHALL BE ON SITE TO DETERMINE NUMBER, SPACING AND REQUIRED DEPTH OF HELICAL PILES AND TO ENSURE ACCORDANCE WITH STRUCTURAL PLANS AND CODES. A COMPLETE PILE LOG RECORD OF THE PILE INSTALLATION OPERATION SHALL BE PREPARED ON SITE.

P3. HELICAL PILE LEAD SECTIONS SHALL BE:
A. 1-1/2" SQUARE SHAFT AND A 10", 12" & 14" DIAMETER HELIX. FOR NEW CONSTRUCTION 30 KIP ULTIMATE PILES (15 TON DESIGN LOAD).

P4. HELICAL PILES, EXTENSIONS AND APPURTENANCES SHALL BE HOT-DIPPED GALVANIZED STEEL IN ACCORDANCE WITH ASTM A153.

P5. CONTRACTOR SHALL SUBMIT 2 COPIES MINIMUM OF SHOP DRAWINGS FOR REVIEW/APPROVAL BY THE STRUCTURAL ENGINEER OF RECORD.

P6. HELICAL PILES SHALL BE INSTALLED TO A MINIMUM DEPTH OF 12 FEET AND A MINIMUM TORQUE OF 4,000 FT-LBS. SUBJECT TO THE FOLLOWING PROVISIONS:

A. IF THE MINIMUM TORQUE REQUIREMENT HAS NOT BEEN SATISFIED AT THE MINIMUM DEPTH LEVEL, THE CONTRACTOR SHALL HAVE THE FOLLOWING OPTIONS:

a) INSTALL THE PILE DEEPER USING ADDITIONAL EXTENSIONS UNTIL THE SPECIFIED TORQUE LEVEL IS OBTAINED.
b) ADD ADDITIONAL PILES AS RECOMMENDED BY ENGINEER.

B. IF THE MAXIMUM TORQUE RATING OF THE PILE AND/OR INSTALLING UNIT HAS BEEN REACHED PRIOR TO SATISFYING THE MINIMUM DEPTH REQUIREMENT, THE CONTRACTOR SHALL HAVE:

a) THE OPTION TO INCREASE THE TERMINAL TORQUE TO A MAXIMUM OF 5,500 FT. LBS.

b) AFTER CONSULTING WITH THE ENGINEER OF RECORD, THE CONTRACTOR MAY REDUCE THE SIZE OF THE HELIX AS REQUIRED TO ACHIEVE THE MINIMUM DEPTH WHILE STILL ACHIEVING THE MINIMUM TORQUE.

P7. HELICAL PILES SHOULD BE INSTALLED AS SHOWN ON THE ENGINEER'S PLAN. ALL CHANGES IN PILE LOCATION MUST BE APPROVED BY THE ENGINEER.

P8. IF UNDERGROUND OBSTRUCTIONS ARE ENCOUNTERED DURING INSTALLATION, THE CONTRACTOR SHALL HAVE THE OPTION OF REMOVING THE OBSTRUCTION IF POSSIBLE OR RELOCATING THE PILE WITH THE ENGINEER'S APPROVAL. THE LATTER OPTION MAY REQUIRE THE RELOCATION OF ADJACENT PILES.

P9. THE HELICAL PILE SHALL BE CONNECTED TO THE STRUCTURE USING A APPROVED STEEL BRACKET. THESE CONNECTION DEVICES SHALL BE CAPABLE OF SAFELY TRANSFERRING THE STRUCTURAL LOADS TO THE HELICAL PILE.

P10. WRITTEN INSTALLATION RECORDS SHALL BE OBTAINED FOR EACH HELICAL PILE. THESE RECORDS SHALL INCLUDE, BUT ARE NOT LIMITED TO THE FOLLOWING:

A. PROJECT NAME AND/OR LOCATION.
B. NAME OF CONTRACTOR'S FOREMAN OR REPRESENTATIVE WHO WITNESSED THE INSTALLATION.
C. DATE AND TIME OF INSTALLATION.
D. LOCATION AND REFERENCE NUMBER OF EACH PILE.
E. DESCRIPTION OF LEAD SECTION AND EXTENSIONS INSTALLED.
F. OVERALL DEPTH OF INSTALLATIONS REFERENCED FROM BOTTOM OF GRADE BEAM OR FOOTING.
G. TORQUE READING FOR THE LAST THREE FEET OF INSTALLATION IF PRACTICAL. IN LIEU OF THIS REQUIREMENT, THE TERMINAL TORQUE SHALL BE RECORDED.
H. ANY OTHER RELEVANT INFORMATION RELATING TO THE INSTALLATION.

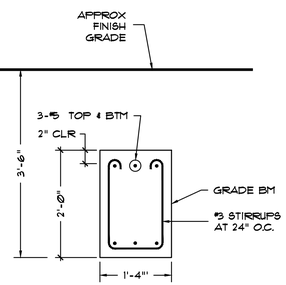

2 / S-1 GRADE BEAM DETAIL
SCALE: 3/4" = 1'-0"

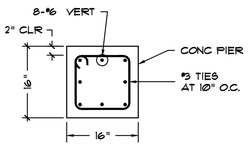

3 / S-1 PIER SECTION
SCALE: 3/4" = 1'-0"

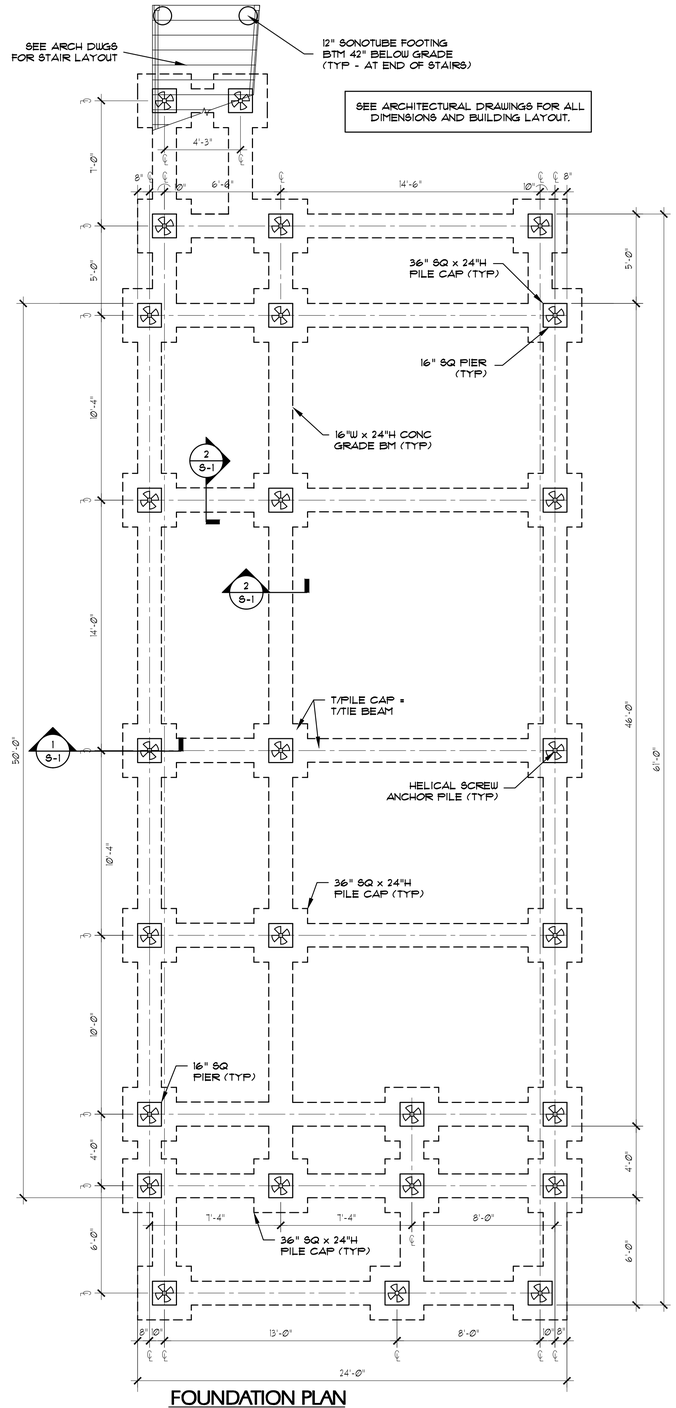

FOUNDATION PLAN

SCALE: ¼" = 1'-0"

1. BOTTOM OF FOOTING ELEVATION SHALL BE MINIMUM 3'-6" BELOW FINISH GRADE.

2. CONTRACTOR IS RESPONSIBLE FOR LOCATING AND PROTECTING ALL EXISTING UTILITIES, WHETHER INDICATED OR NOT ON DRAWINGS, WHICH MAY BE AFFECTED BY THE CONSTRUCTION PROCESS.

3. CONTRACTOR IS RESPONSIBLE FOR VERIFYING ALL FOUNDATION DIMENSIONS AND COORDINATE WITH EXISTING WOOD FLOOR FRAMING FOR PROPER FIT TO NEW FOUNDATION.

GENERAL STRUCTURAL NOTES

G1. THE OWNER/CONTRACTOR SHALL SUBMIT 2 COPIES MINIMUM OF SHOP DRAWINGS FOR REVIEW/APPROVAL BY THE STRUCTURAL ENGINEER OF RECORD.

G2. THE CONTRACTOR SHALL BEAR SOLE RESPONSIBILITY FOR MEANS AND METHODS OF CONSTRUCTION AND SAFETY ON THE JOB SITE.

G3. ALL DIMENSIONS SHOWN ARE FOR REFERENCE ONLY. CONTRACTOR IS TO VERIFY ALL DIMENSIONS, ANGLES ,ELEVATIONS, etc. PRIOR TO THE START OF FABRICATION OR CONSTRUCTION.

G4. CONTRACTOR SHALL IDENTIFY ALL EXISTING LOAD BEARING ELEMENTS PRIOR TO WORK AND SHALL DESIGN AND PROVIDE TEMPORARY SHORING AS REQUIRED TO SUPPORT CONSTRUCTION. CONTRACTOR SHALL BEAR SOLE RESPONSIBILITY FOR ALL SHORING.

CODE DATA & DESIGN LOADS

GOVERNING CODE:

ALL WORK SHALL CONFORM TO THE REQUIREMENTS OF THE 2003 INTERNATIONAL RESIDENTIAL CODE, THE 2005 CONNECTICUT SUPPLEMENT AND THE 2003 CONNECTICUT AMENDMENT.

FLOOR

FLOOR LIVE LOAD	40 PSF (MIN)
EXTERIOR DECKS	40 PSF (MIN)
FLOOR DEFLECTION (L/360 CODE)	L/480 (MIN)

SNOW

ROOF SNOW LOAD	30 PSF

WIND (PER ASCE 7-02)

BASIC WIND SPEED (MILFORD, CT)	110 MPH
EXPOSURE	C
DESIGN WIND PRESSURE (MWFRS)	q =27.05 PSF

SEISMIC

MCE SPECTRAL ACCELERATIONS	Ss = 0.263 S1 = 0.079
SEISMIC DESIGN CATEGORY	B

FOUNDATION / SOILS

F1. FOR HELICAL PILE DEEP PILE FOUNDATION DESIGN PARAMETERS, REFER TO GEOTECHNICAL STUDY PERFORMED BY DR. CLARENCE WELTI & ASSOCIATES, DATED JANUARY 8, 2013.

F2. BOTTOM OF PILE CAP FOUNDATIONS SHALL BE 3'-6" OR MORE BELOW FINISHED GRADE.

F3. WHERE GROUNDWATER IS ENCOUNTERED, A MINIMUM OF 6" OF ⅜" CRUSHED STONE SHALL BE PLACED UNDER FOOTINGS.

F4. CONTRACTOR IS RESPONSIBLE FOR LOCATING AND PROTECTING ALL EXISTING UNDERGROUND UTILITIES INCLUDING SEPTIC SYSTEM.

F5. ALL PILE CAPS SHALL BE CENTERED UNDER COLUMN PIERS UNLESS OTHERWISE NOTED.

REINFORCED CONCRETE

C1. ALL CONCRETE WORK SHALL CONFORM TO THE AMERICAN CONCRETE INSTITUTE'S "SPECIFICATIONS FOR STRUCTURAL CONCRETE FOR BUILDINGS" (ACI 301).

C2. CONCRETE MIX DESIGN:

f'c = 4000 PSI (MIN.) AT 28 DAYS
w/c RATIO = 0.48 (MAX)
MIN. CEMENT PER C.Y. = 540 LBS.
SLUMP = 4" +/- 1"
AIR ENTRAINMENT: 6%

SUBMIT CONCRETE MIX DESIGN FOR APPROVAL PRIOR TO CONCRETE PLACEMENT.

C3. REINFORCING STEEL SHALL BE ASTM A615, GRADE 60, EPOXY COATED.

C4. EPOXY COATED REBAR SHALL CONFORM TO ASTM D3963 "STANDARD SPECIFICATION FOR FABRICATION AND JOBSITE HANDLING OF EPOXY-COATED STEEL REINFORCING BARS".

C5. BAR DETAILING SHALL BE IN ACCORDANCE WITH THE "ACI DETAILING MANUAL-1998." PLACMENT DRAWINGS SHALL SHOW THE NUMBER AND LOCATION OF ALL BAR SUPPORT AND ACCESSORIES.

C6. CONCRETE COVER SHALL BE AS FOLLOWS:

CONCRETE POURED AGAINST EARTH_____ 3"
CONCRETE POUR IN FORMS
BUT EXPOSED TO EARTH/WEATHER:

#5 BARS AND SMALLER _____ 1½"
#6 BARS AND LARGER _____ 2"

C7. ALL COLD WEATHER CONCRETING SHALL CONFORM TO THE REQUIREMENTS OF ACI 306.

C8. ALL HOT WEATHER CONCRETING SHALL CONFORM TO THE REQUIREMENTS OF ACI 305.

C9. ALL CONCRETE CURING SHALL CONFORM TO THE REQUIREMENTS SET FORTH IN ACI 308.

STATE OF CONNECTICUT
THOMAS K. GILLESPIE
No. 15235
LICENSED
PROFESSIONAL ENGINEER

THOMAS K. GILLESPIE, PE
STRUCTURAL ENGINEER
47 HILLTOP TRAIL SALEM, CT 06420
PH 860.861.3111 PURDUE93@AOL.COM

HELD RESIDENCE
159 HILLSIDE AVENUE
MILFORD, CT

Scale: 1/4" = 1'-0"
Date 12/28/13
Project No. 4720

FOUNDATION PLAN

Sheet No.
S-1

ABBREVIATIONS

AFF	ABOVE FINISH FLOOR
ARCH	ARCHITECTURAL
B, BTM	BOTTOM
℄	CENTER LINE
CJ	CONTROL JOINT
COL	COLUMN
CONC	CONCRETE
CONT	CONTINUOUS
DIA	DIAMETER
DWG	DRAWING
DWL	DOWEL
EA	EACH
EF	EACH FACE
EL, ELEV	ELEVATION
EMBED	EMBEDMENT
EQ	EQUAL
EW	EACH WAY
EX, EXIST	EXISTING
FDN	FOUNDATION
FTG	FOOTING
GA	GAGE
GALV	GALVANIZED
HDR	HEADER
HORIZ	HORIZONTAL
HP	HIGH POINT
IF	INSIDE FACE
LP	LOW POINT
MAX	MAXIMUM
MIN	MINIMUM
OC	ON CENTER
OPNG	OPENING
UON	UNLESS OTHERWISE NOTED
PAF	POWDER ACTUATED FASTENER
PL	PLATE
PSF	POUNDS PER SQUARE FOOT
PT	PRESSURE TREATED
REQ'D	REQUIRED
SQ	SQUARE
T/	TOP OF
T/FTG	TOP CHORD EXTENSION
T/GB	TOP OF GRADE BEAM
T/PIER	TOP OF PIER
T/SLAB	TOP OF SLAB
T/STL	TOP OF STEEL
T/WALL	TOP OF WALL
TJ	TIE JOIST
TYP	TYPICAL
UNO	UNLESS NOTED OTHERWISE
VERT	VERTICAL
VIF	VERIFY IN FIELD
W/	WITH
WWF	WELDED WIRE FABRIC

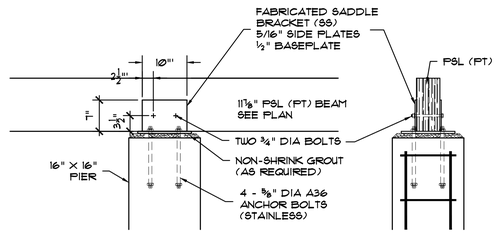

DETAIL - TOP OF PIERS

SCALE: ¾" = 1'-0"

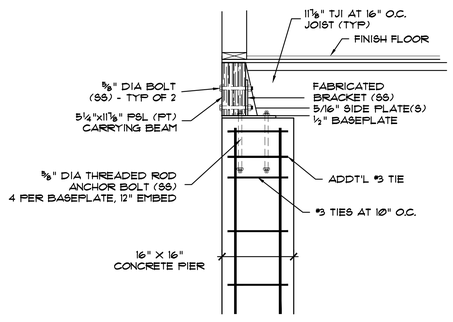

SECTION

SCALE: 3/4" = 1'-0"

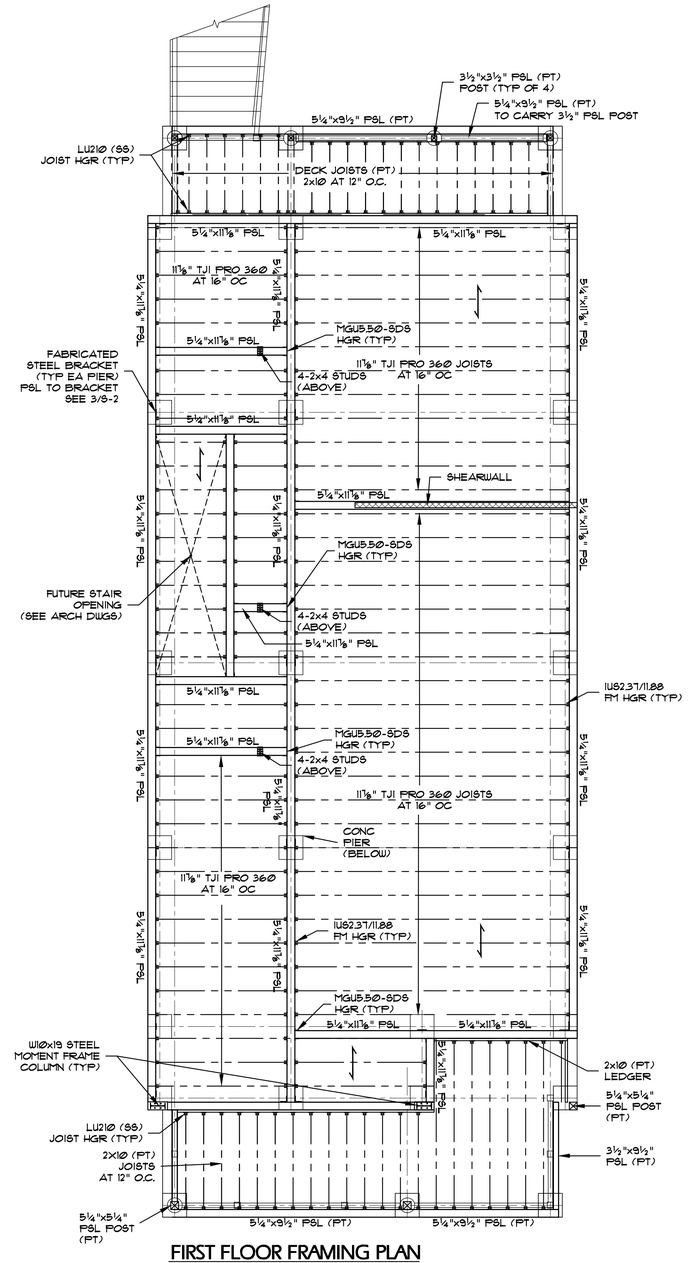

FIRST FLOOR FRAMING PLAN

SCALE: ¼" = 1'-0"

1. ⟷ INDICATES SPAN DIRECTION OF ¾" CDX PLYWOOD SHEATHING.
2. ALL EXTERIOR BEARING WALLS SHALL BE 2x6 STUDS @ 16" O.C. UNLESS NOTED OTHERWISE.
3. PROVIDE TRIPLE 2x6 STUDS CONTINUOUS TO THE FOUNDATION AT ALL BEAM BEARING LOCATIONS.
4. SEE ARCHITECTURAL DRAWINGS FOR CEILING JOIST FRAMING SIZES AND ARRANGEMENT.
5. ALL NAILING SHALL BE FASTENED IN ACCORDANCE WITH TABLE R602.3(1) OF THE 2003 INTERNATIONAL RESIDENTIAL CODE.
6. COORDINATE ALL DIMENSIONS AND ELEVATIONS WITH ARCHITECTURAL DRAWINGS.
7. ALL PSL CARRYING BEAMS TO BE ANCHORED TO CONCRETE PIERS WITH FABRICATED STEEL BRACKETS. ALL BRACKETS AND BOLTS TO BE STAINLESS STEEL. FASTEN PSL'S TO BRACKETS THROUGH 5/16" STEEL SIDE PLATES WITH TWO (2) ⅝" DIA THREADED ROD (TYP). MINIMUM OF ONE (1) SIDEPLATE PER PSL. EACH PIER CONFIGURATION IS CUSTOM - SHOP DRAWINGS TO BE PROVIDED PRIOR TO FABRICATION. BRACKET BASEPLATES TO BE ½" THICK WITH FOUR (4) ⅝" DIA ANCHOR BOLTS.

WOOD FRAMING

W1. SEE ARCHITECTURAL DRAWINGS FOR DIMENSIONED LAYOUT OF INTERIOR PARTITIONS AND DOOR/WINDOW OPENING LOCATIONS.

W2. ALL FRAMING LUMBER SHALL BE DOUGLAS FIR/ LARCH (NORTH) NO2 GRADE OR BETTER, UNLESS OTHERWISE SHOWN.

W3. ENGINEERED LUMBER:

LAMINATED VEENER LUMBER (LVL) SHALL BE MICRO-LAM 1.9E BY 1-LEVEL.

PARALLEL STRAND LUMBER (PSL) BEAMS AND HEADERS SHALL BE PARALLAM PSL 2.0E BY 1-LEVEL.

PARALLEL STRAND LUMBER (PSL) COLUMNS SHALL BE PARALLAM PSL 1.8E BY 1-LEVEL.

ALTERNATE PRODUCTS WILL ONLY BE PERMITTED IF APPROVED IN ADVANCE IN WRITING BY THE STRUCTURAL ENGINEER. ENGINEERED LUMBER SHALL BE INSTALLED PER MANUFACTURER'S RECOMMENDATIONS.

W4. ALL PLYWOOD PRODUCT AND INSTALLATION SHALL CONFORM TO THE REQUIREMENTS OF THE AMERICAN PLYWOOD ASSOC. LEAVE GAPS AT EDGES AS RECOMMENDED.

W5. ALL METAL FRAMING CONNECTIONS SHALL BE SIMPSON OR EQUAL.

W6. METAL FRAMING HANGER SCHEDULE:
2X JOIST/RAFTER_____LUS SERIES
PSL & MICROLLAM_____MGUS SERIES
POSTS_____ SEE PLAN AS APPLICABLE
TRUSS ENDS - RAFTERS_____H SERIES "HURRICANE" CLIPS

W7. EXPOSED HANGERS SHALL BE STAINLESS STEEL. FOLLOW SIMPSON STRONG-TIE RECOMMENDATIONS. SEE PLAN FOR SKEW / SLOPE REQUIREMENTS. ALL HANGERS TO BE FULLY NAILED PER MANUFACTURERS NAILING SCHEDULE.

W8. ALL BOLTS, NAILS AND ASSOCIATED FASTENERS EXPOSED TO THE WEATHER SHALL BE STAINLESS STEEL.

W8. ALL WOOD FRAMING CONNECTIONS SHALL BE FASTENED IN ACCORDANCE WITH "FASTENING SCHEDULE" OF 2003 IBC, UNLESS OTHERWISE INDICATED.

W9. EXTERIOR WALL NAILING SCHEDULE: FASTEN PANELS NOT LESS THAN 8d COMMON SPACED 4" O.C ALONG EDGES AND 9" O.C. INTERMEDIATE. ALL VERTICAL JOINTS OF PANEL SHEATHING SHALL OCCUR OVER STUDS.

W10. WALL SILL PLATES SHALL BE ANCHORED TO FOUNDATION WALL WITH 1/2" DIA. A307 ANCHOR BOLTS W/3" SQUARE WASHERS SPACED 4'-0" MAX. THERE SHALL BE A MINIMUM OF 2 ANCHOR BOLTS PER SECTION OF SOLE PLATE.

W11. ALL LUMBER EXPOSED TO WEATHER SHALL BE PRESSURE TREATED (CCQ TYPES B & D OR CBA-A, CA-B) LEVEL OF TREATMENT SHALL BE IN ACCORDANCE W/AWPA STANDARDS FOR RETENTION BASED ON END USE APPLICATION (ABOVE GROUND USE, GROUND CONTACT, DECKING, ETC.).

W12. FOR OPENINGS 6'-0" IN WIDTH OR UNDER, INSTALL ONE (1) JACKSTUD PLUS ONE (1) FULL HEIGHT KING STUD. FOR OPENINGS OVER 6'-0", INSTALL TWO (2) JACKSTUDS PLUS TWO (2) FULL HEIGHT KING STUDS, UNLESS OTHERWISE NOTED.

W13. ALL HEADERS SHALL BE PER HEADER SCHEDULE, UNLESS OTHERWISE NOTED ON THE PLANS.

W14. ALL OPENINGS SHALL BE FRAMED WITH DOUBLE MEMBERS UNLESS OTHERWISE NOTED ON THE PLANS.

HEADER SCHEDULE

OPENING WIDTH	LINTEL SIZE	BEARING EACH END
3'-6" OR LESS	2 - 1¾"x9½" MICROLLAM LVL	1 1/2"
OVER 3'-6" THRU 5'-6"	2-1¾"x11⅞" MICROLLAM LVL	3"
OVER 5'-6" THRU 8'-6"	2-1¾"X14" MICROLLAM LVL	3"

CONFIDENTIAL
PROPRIETARY INFORMATION
THE INFORMATION HEREIN IS OF A PROPRIETARY NATURE AND IS SUBMITTED IN CONFIDENCE FOR USE BY OUR CLIENTS ONLY. UNAUTHORIZED REPRODUCTION, PUBLICATION, DISTRIBUTION, IN WHOLE OR IN PART, IS EXPRESSLY PROHIBITED. THE INFORMATION CONTAINED HEREIN IS AND REMAINS THE PROPERTY OF THOMAS K. GILLESPIE, PE, LLC AND RECEIPT OR POSSESSION OF THIS INFORMATION CONFERS NO RIGHT IN OR LICENSE TO USE OR TO DISCLOSE TO OTHERS THE SUBJECT MATTER CONTAINED HEREIN FOR ANY BUT AUTHORIZED PURPOSES. ALL RIGHTS RESERVED.

STATE OF CONNECTICUT
THOMAS K. GILLESPIE
No. 18328
LICENSED
PROFESSIONAL ENGINEER

THOMAS K. GILLESPIE, PE
STRUCTURAL ENGINEER
47 HILLTOP TRAIL SALEM, CT 06420
PH 860.861.3111 PURDUE93@AOL.COM

HELD RESIDENCE
159 HILLSIDE AVENUE
MILFORD, CT

Scale: 1/4" = 1'-0"
Date: 12/28/13
Project No. 4720

FIRST FLOOR FRAMING PLAN

Sheet No.
S-2

ABBREVIATIONS

AFF	ABOVE FINISH FLOOR
ARCH	ARCHITECTURAL
B, BTM	BOTTOM
℄	CENTER LINE
CJ	CONTROL JOINT
COL	COLUMN
CONC	CONCRETE
CONT	CONTINUOUS
DIA	DIAMETER
DWG	DRAWING
DWL	DOWEL
EA	EACH
EF	EACH FACE
EL, ELEV	ELEVATION
EMBED	EMBEDMENT
EQ	EQUAL
EW	EACH WAY
EX, EXIST	EXISTING
FDN	FOUNDATION
FTG	FOOTING
GA	GAGE
GALV	GALVANIZED
HDR	HEADER
HORIZ	HORIZONTAL
HP	HIGH POINT
IF	INSIDE FACE
LP	LOW POINT
MAX	MAXIMUM
MIN	MINIMUM
OC	ON CENTER
OPNG	OPENING
UON	UNLESS OTHERWISE NOTED
PAF	POWDER ACTUATED FASTENER
PL	PLATE
PSF	POUNDS PER SQUARE FOOT
PT	PRESSURE TREATED
REQ'D	REQUIRED
SQ	SQUARE
T/	TOP OF
T/FTG	TOP CHORD EXTENSION
T/GB	TOP OF GRADE BEAM
T/PIER	TOP OF PIER
T/SLAB	TOP OF SLAB
T/STL	TOP OF STEEL
T/WALL	TOP OF WALL
TJ	TIE JOIST
TYP	TYPICAL
UNO	UNLESS NOTED OTHERWISE
VERT	VERTICAL
VIF	VERIFY IN FIELD
W/	WITH
WWF	WELDED WIRE FABRIC

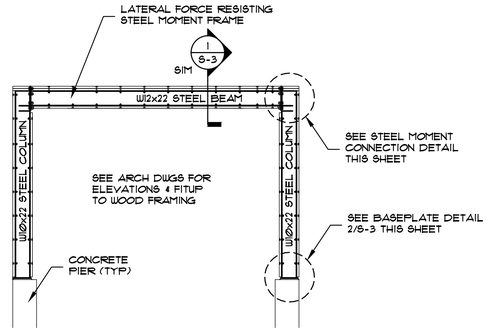

LATERAL FORCE RESISTING STEEL MOMENT FRAME

SCALE: ¼" = 1'-0"

GENERAL:

1. THE CONTRACTOR SHALL VERIFY ALL DIMENSIONS, CONDITIONS, ELEVATIONS, ETC. PRIOR TO FABRICATION AND INSTALLATION OF ANY COMPONENTS FOR THE STEEL MOMENT FRAME SYSTEM. IF ANY DISCREPANCIES ARE FOUND, THEY SHALL BE BROUGHT TO THE ATTENTION OF THE STRUCTURAL ENGINEER FOR CLARIFICATION.

MATERIAL:

1. BARS/PLATES: ASTM 572 GR 55
2. END PLATE HIGH STRENGTH BOLTS: ASTM A325, TYPE 1
3. WOOD NAILER CARRIAGE BOLTS: ASTM A307 GR. A
4. ANCHOR RODS: ASTM F1554 GR 36 OR A36
5. GROUT: ASTM C1107, MINIMUM 5,000 PSI COMPRESSIVE STRENGTH
6. WELDING SHALL BE IN ACCORDANCE WITH AWS D1.1

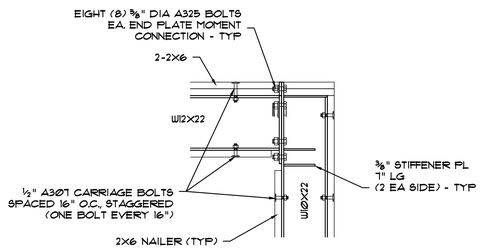

2 / S-3 STEEL MOMENT CONNECTION

SCALE: ¾" = 1'-0"

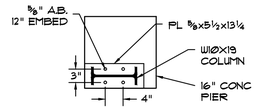

3 / S-3 STEEL MOMENT FRAME BASEPLATE DETAIL

SCALE: ¾" = 1'-0"

SEE ARCHITECTURAL DRAWINGS FOR ALL DIMENSIONS AND BUILDING LAYOUT.

HEADER SCHEDULE

OPENING WIDTH	LINTEL SIZE	BEARING EACH END
3'-6" OR LESS	2 - 1¾"x9½" MICROLLAM LVL	1 1/2"
OVER 3'-6" THRU 5'-6"	2-1¾"x11⅞" MICROLLAM LVL	3"
OVER 5'-6" THRU 8'-6"	2-1¾"x14" MICROLLAM LVL	3"

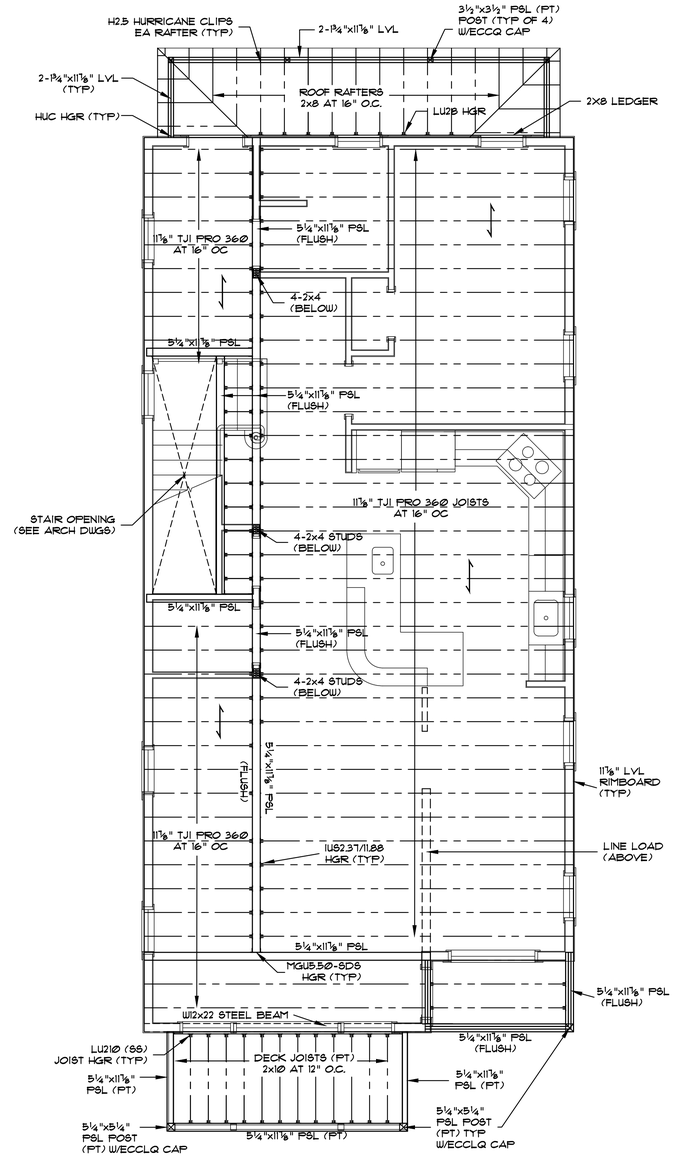

SECOND FLOOR FRAMING PLAN

SCALE: ¼" = 1'-0"

1. COORDINATE TOP OF WALL PLATE HEIGHTS WITH ARCHITECTURAL DRAWINGS.
2. ⟷ INDICATES SPAN DIRECTION OF ¾" CDX PLYWOOD SHEATHING.
3. ALL EXTERIOR BEARING WALLS SHALL BE 2x6 STUDS @ 16" O.C. UNLESS NOTED OTHERWISE.
4. PROVIDE TRIPLE 2x6 STUDS CONTINUOUS TO THE FOUNDATION AT ALL BEAM BEARING LOCATIONS.
5. SEE ARCHITECTURAL DRAWINGS FOR CEILING JOIST FRAMING SIZES AND ARRANGEMENT.
6. ALL NAILING SHALL BE FASTENED IN ACCORDANCE WITH TABLE R602.3(1) OF THE 2003 INTERNATIONAL RESIDENTIAL CODE.
7. COORDINATE ALL DIMENSIONS AND ELEVATIONS WITH ARCHITECTURAL DRAWINGS.

CONFIDENTIAL
PROPRIETARY INFORMATION

THE INFORMATION HEREIN IS OF A PROPRIETARY NATURE AND IS SUBMITTED IN CONFIDENCE FOR USE BY OUR CLIENTS ONLY. UNAUTHORIZED REPRODUCTION, PUBLICATION, DISTRIBUTION, IN WHOLE OR IN PART, IS EXPRESSLY PROHIBITED. THE INFORMATION CONTAINED HEREIN IS AND REMAINS THE PROPERTY OF THOMAS K. GILLESPIE, PE, LLC AND RECEIPT OR POSSESSION OF THIS INFORMATION CONFERS NO RIGHT IN OR LICENSE TO USE OR TO DISCLOSE TO OTHERS THE SUBJECT MATTER CONTAINED HEREIN FOR ANY BUT AUTHORIZED PURPOSES. ALL RIGHTS RESERVED.

STATE OF CONNECTICUT
THOMAS K. GILLESPIE
No. 19338
LICENSED
PROFESSIONAL ENGINEER

THOMAS K. GILLESPIE, PE
STRUCTURAL ENGINEER
47 HILLTOP TRAIL SALEM, CT 06420
PH 860.861.3111 PURDUE93@AOL.COM

HELD RESIDENCE
159 HILLSIDE AVENUE
MILFORD, CT

Scale: 1/4" = 1'-0"	Date 12/1/13	Project No. 4720

SECOND FLOOR FRAMING & LATERAL STEEL FRAME

Sheet No.
S-3

ABBREVIATIONS

AFF	ABOVE FINISH FLOOR
ARCH	ARCHITECTURAL
B, BTM	BOTTOM
℄	CENTER LINE
CJ	CONTROL JOINT
COL	COLUMN
CONC	CONCRETE
CONT	CONTINUOUS
DIA	DIAMETER
DWG	DRAWING
DWL	DOWEL
EA	EACH
EF	EACH FACE
EL, ELEV	ELEVATION
EMBED	EMBEDMENT
EQ	EQUAL
EW	EACH WAY
EX, EXIST	EXISTING
FDN	FOUNDATION
FTG	FOOTING
GA	GAGE
GALV	GALVANIZED
HDR	HEADER
HORIZ	HORIZONTAL
HP	HIGH POINT
IF	INSIDE FACE
LP	LOW POINT
MAX	MAXIMUM
MIN	MINIMUM
OC	ON CENTER
OPNG	OPENING
UON	UNLESS OTHERWISE NOTED
PAF	POWDER ACTUATED FASTENER
PL	PLATE
PSF	POUNDS PER SQUARE FOOT
PT	PRESSURE TREATED
REQ'D	REQUIRED
SQ	SQUARE
T/	TOP OF
T/FTG	TOP CHORD EXTENSION
T/GB	TOP OF GRADE BEAM
T/PIER	TOP OF PIER
T/SLAB	TOP OF SLAB
T/STL	TOP OF STEEL
T/WALL	TOP OF WALL
TJ	TIE JOIST
TYP	TYPICAL
UNO	UNLESS NOTED OTHERWISE
VERT	VERTICAL
VIF	VERIFY IN FIELD
W/	WITH
WWF	WELDED WIRE FABRIC

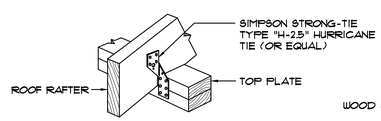

TYPICAL "H-2.5 HURRICANE TIE" (TYPICAL AT ALL ROOF RAFTERS/WOOD TRUSSES)

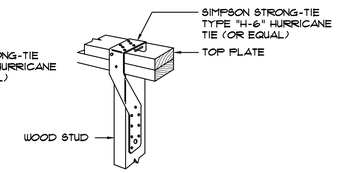

TYPICAL "H-6 HURRICANE TIE" (TYPICAL AT 4'-0" O.C. SPACING AT TOP OF ALL EXTERIOR WALLS)

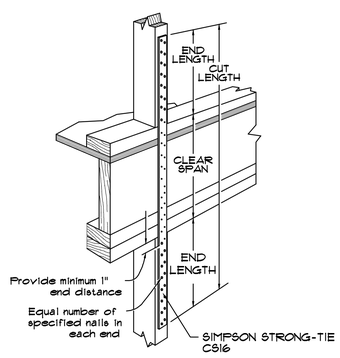

TYP FLOOR TO FLOOR STRAP CONNECTION

SPACE STRAP ANCHORS 32" O.C.

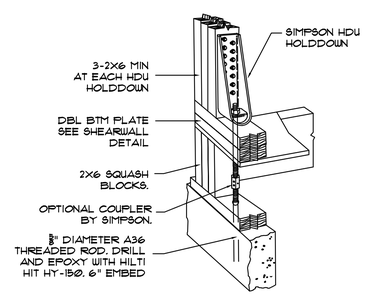

SIMPSON HDU HOLDDOWN

SEE ARCHITECTURAL DRAWINGS FOR ALL DIMENSIONS AND BUILDING LAYOUT.

HEADER SCHEDULE

OPENING WIDTH	LINTEL SIZE	BEARING EACH END
3'-6" OR LESS	2 - 1¾"X9½" MICROLLAM LVL	1 1/2"
OVER 3'-6" THRU 5'-6"	2-1¾"X11⅞" MICROLLAM LVL	3"
OVER 5'-6" THRU 8'-6"	2-1¾"X14" MICROLLAM LVL	3"

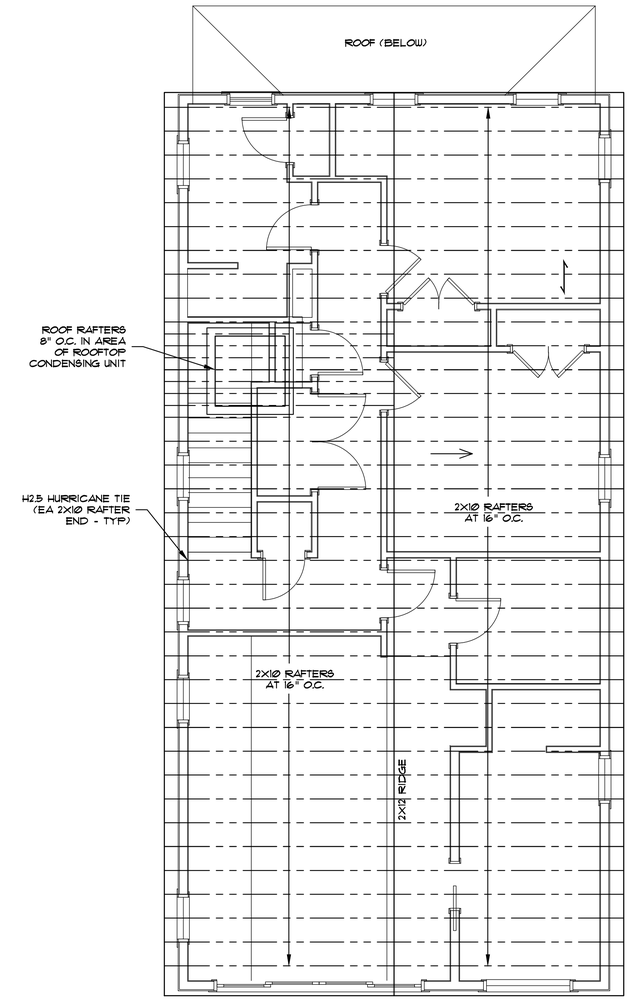

ROOF FRAMING PLAN

SCALE: ¼" = 1'-0"

1. COORDINATE TOP OF WALL PLATE HEIGHTS WITH ARCHITECTURAL DRAWINGS.
2. ⟷ INDICATES SPAN DIRECTION OF PLYWOOD SHEATHING.
3. ALL EXTERIOR BEARING WALLS SHALL BE 2x6 STUDS @ 16" O.C. UNLESS NOTED OTHERWISE.
4. PROVIDE TRIPLE 2x6 STUDS CONTINUOUS TO THE FOUNDATION AT ALL BEAM BEARING LOCATIONS.
5. SEE ARCHITECTURAL DRAWINGS FOR CEILING JOIST FRAMING SIZES AND ARRANGEMENT.
6. SEE ARCHITECTURAL DRAWINGS FOR ROOF LIMITS AND OVERHANG DETAILS .
7. ALL NAILING SHALL BE FASTENED IN ACCORDANCE WITH TABLE R602.3(1) OF THE 2003 INTERNATIONAL RESIDENTIAL CODE.
8. COORDINATE ALL DIMENSIONS AND ELEVATIONS WITH ARCHITECTURAL DRAWINGS.
9. COORDINATE ALL ROOF PENETRATIONS, UTILITIES AND MECHANICAL CHASES WITH APPLICABLE TRADES.
10. ALL ROOF RAFTERS SHALL HAVE SIMPSON H2.5 HURRICANE TIES AT EACH RAFTER TO TOP PLATE EAVE CONNECTION.

CONFIDENTIAL
PROPRIETARY INFORMATION

THE INFORMATION HEREIN IS OF A PROPRIETARY NATURE AND IS SUBMITTED IN CONFIDENCE FOR USE BY OUR CLIENTS ONLY. UNAUTHORIZED REPRODUCTION, PUBLICATION, DISTRIBUTION, IN WHOLE OR IN PART, IS EXPRESSLY PROHIBITED. THE INFORMATION CONTAINED HEREIN IS AND REMAINS THE PROPERTY OF THOMAS K. GILLESPIE, PE, LLC AND RECEIPT OR POSSESSION OF THIS INFORMATION CONFERS NO RIGHT IN OR LICENSE TO USE OR TO DISCLOSE TO OTHERS THE SUBJECT MATTER CONTAINED HEREIN FOR ANY BUT AUTHORIZED PURPOSES. ALL RIGHTS RESERVED.

THOMAS K. GILLESPIE, PE
STRUCTURAL ENGINEER
47 HILLTOP TRAIL SALEM, CT 06420
PH 860.861.3111 PURDUE93@AOL.COM

HELD RESIDENCE
159 HILLSIDE AVENUE
MILFORD, CT

Scale: 1/4" = 1'-0"
Date: 12/1/13
Project No. 4720

ROOF FRAMING PLAN

Sheet No.
S-4