Copyright © 2011 Capital Studio Architects, LLC

THE STATE OF CONNECTICUT
DEPARTMENT OF HOUSING (DOH)
COMMUNITY DEVELOPMENT BLOCK GRANT - DISASTER RECOVERY (CDBG-DR)
OWNER OCCUPIED REHABILITATION and REBUILDING PROGRAM (OORR)

May 27, 2014

csa project
1347-16
Issued for: Bidding

Mobilio Residence
Basement Rehabilitation
Application No. 2028
167 Pleasant View Road
Derby, CT 06418

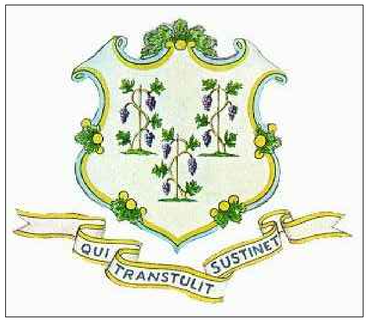

Architect

Capital Studio Architects, LLC
1379 Main Street
East Hartford, Connecticut 06108
tel: 860.289.3262 fax: 860.289.3163

Environmental Consultant

Eagle Environmental, Inc.
8 South Main Street, Suite 3
Terryville, Connecticut 06786
tel: 860.589.8257 fax: 860.585.7034

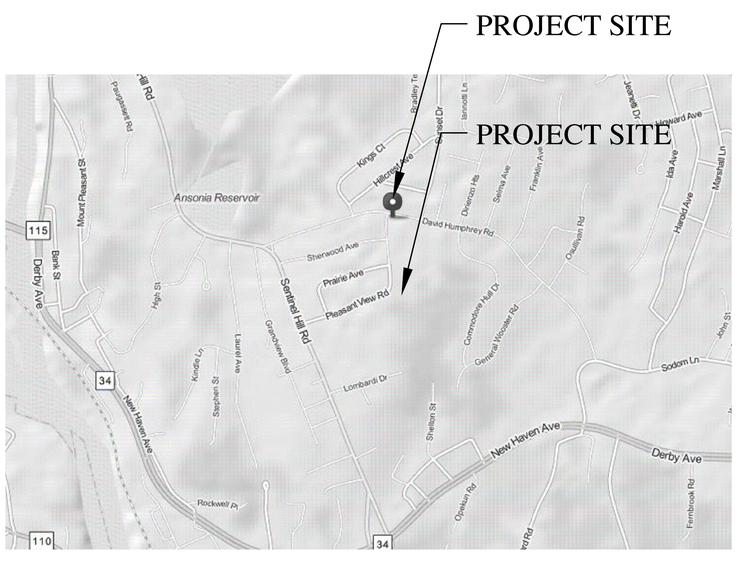

LOCATION PLAN

not to scale

Drawing List

Title Sheet
A-1 BASEMENT PLAN, DETAILS and NOTES

6/4/2014 3:30 PM Y:\2008 Projects\08-41_01 DOH Disaster Relief for Hurricane Sandy\SHA\1-dr 2028 #1 Pleasant View Road Derby - Mobilio\SHA\1-dr Drawings\CAD\A1-dr 2028 LD Plans and Details.dwg

Copyright © 2013 Capital Studio Architects, LLC

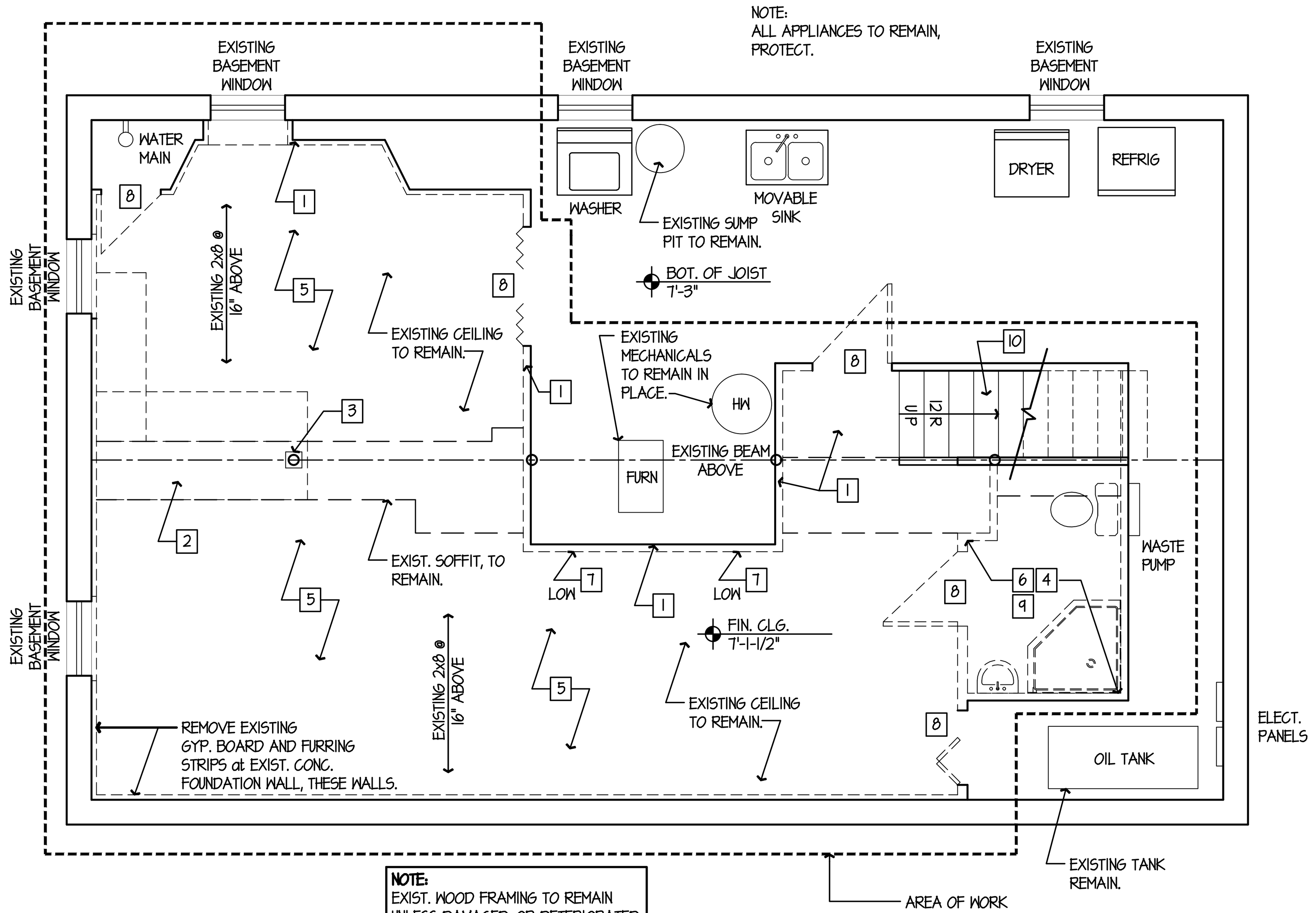

1 / A-1 DEMOLITION PLAN

SCALE: 1/4"=1'-0"

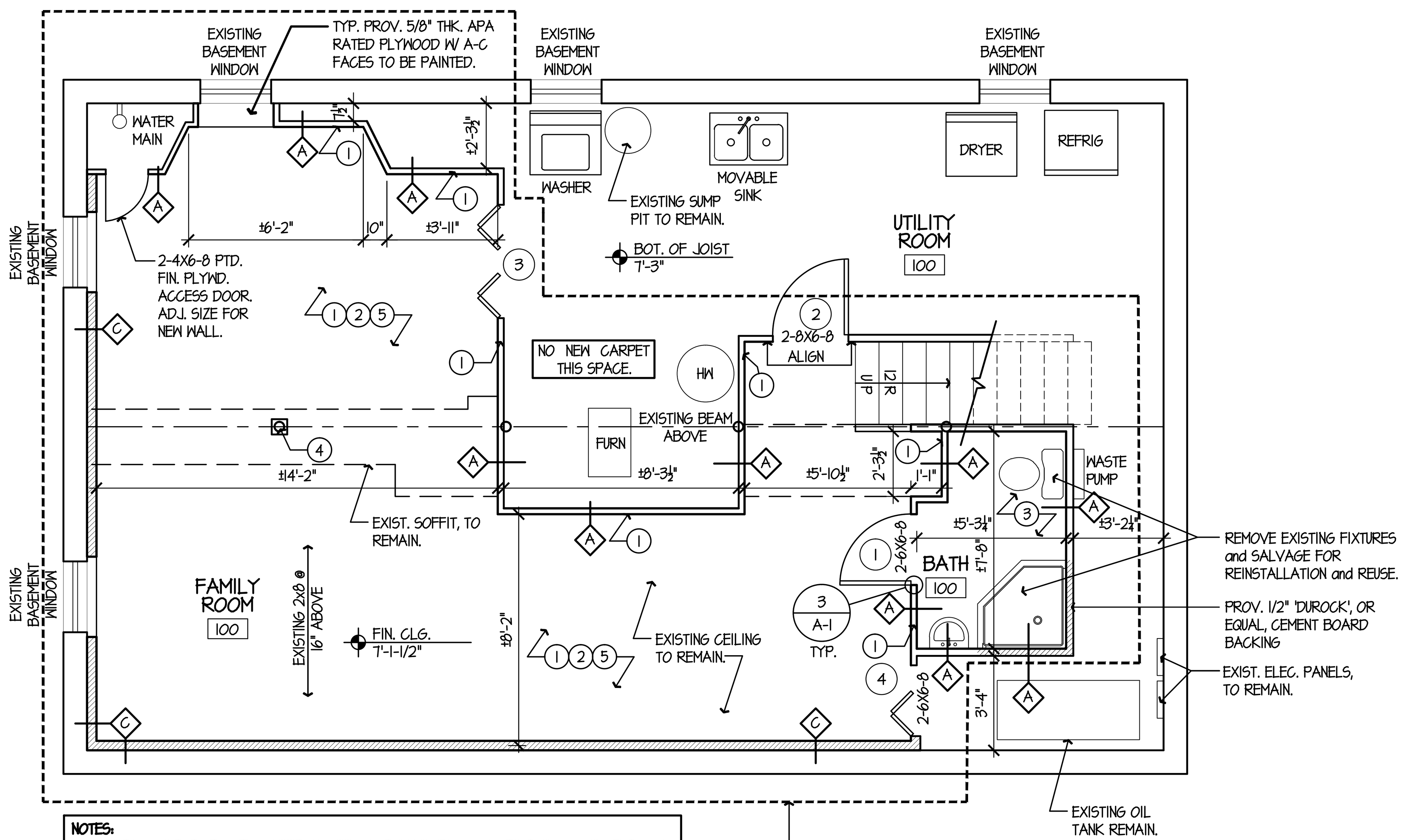

NOTES:
1. AREA TO RECEIVED NEW CARPETING, PROVIDE SAMPLES TO OWNER FOR COLOR SELECTION.
2. PROVIDE ELECTRICAL BOX EXTENSIONS AT ALL WALLS THAT RECEIVE NEW GWB.

2 / A-1 FLOOR PLAN

SCALE: 1/4"=1'-0"

DOOR SCHEDULE

No.	DOOR ROOM	DOOR DES.	DOOR SIZE	DOOR MAT'L/ FIN.	FRAME DES.	FRAME MAT'L/ FIN.	HARDWARE REMARKS
1	BATH	D1	3'-0" x 6'-8"	WOOD-PRIME/PTD.	EXIST.	EXIST.	PRIVACY LOCK SET
2	LAUNDRY	D1	3'-0" x 6'-8"	WOOD-PRIME/PTD.	EXIST.	EXIST.	PASSAGE HANDLE SET
3	FAMILY	D2	3'-0" x 6'-8"	WOOD-PRIME/PTD.	EXIST.	EXIST.	BI-FOLD KIT
4	OIL TANK/MECH	D2	3'-0" x 6'-8"	WOOD-PRIME/PTD.	EXIST.	EXIST.	BI-FOLD KIT

NOTES:
DOORS SHALL BE HOLLOW CORE, 6 PANEL DOORS W/ EITHER WELDED WOOD FIBER OR HARDBOARD / MASONITE FACES PANELS AS MANUFACTURERED BY 'JELD-WEN' OR APPROVED EQUAL.

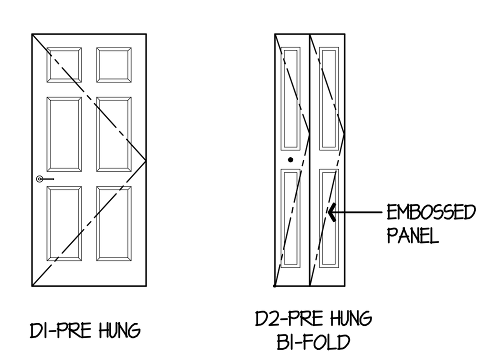

DOOR ELEVATIONS

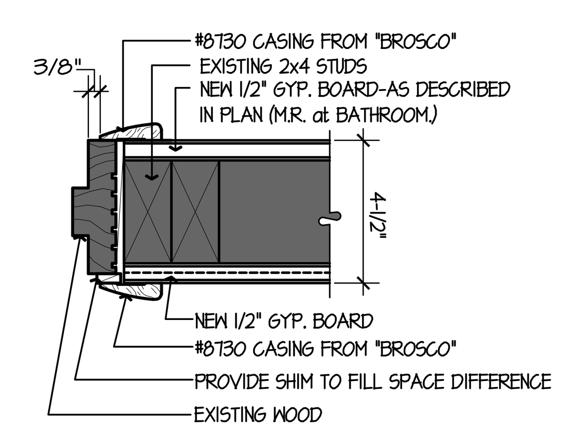

3 / A-1 JAMB DETAIL

SCALE: 1/4"=1'-0"

ABBREVIATIONS

Conc.	Concrete
Exist.	Existing
Gyp. Brd.	Gypsum Board
O/C	On center
P.T.	Pressure Treated
R	Riser
w/	with
Cont.	continuous

LEGEND

- REVISION NUMBER
- DETAIL NUMBER: DETAIL NUMBER, SHEET NUMBER
- ELEVATION MARK (HEIGHT)
- CENTERLINE
- SECTION MARKER: DETAIL NUMBER, SHEET NUMBER
- EXISTING WALL
- WALL TO BE REMOVED
- NEW WALL

DEMOLITION KEYNOTES

1. REMOVE EXISTING WALL PANELING, BASE, AND CROWN MOLDING. EXISTING STUDS TO REMAIN. TREAT WOOD STUDS AS REQ'D FOR MOLD AND OTHER HAZMAT MATERIALS, REPLACE ROTTED AND DETERIORATED STUDS AND BOTTOM PLATES, RE: UNITS PRICES.
2. REMOVE EXISTING WOOD CABINETRY.
3. REMOVE EXISTING COLUMN SURROUND.
4. REMOVE EXISTING GWB AT BATH WALLS.
5. REMOVE ALL LOOSE DEBRIS AND ADHESIVE FROM CONCRETE FLOOR, PREP FLOOR FOR NEW FINISHES.
6. REMOVE EXIST. CERAMIC TILE FLOOR, INCLUDING GROUT and MUDSET.
7. REMOVE AND SALVAGE FOR REUSE, EXISTING THRU-WALL VENTS AT BOTTOM OF WALLS.
8. REMOVE EXISTING DOOR AND PREP FOR NEW DOOR.
9. REMOVE AND SALVAGE FOR REUSE ALL EXISTING BATHROOM FIXTURES.
10. REMOVE EXIST. CARPETING at STAIRS, COMPLETE, INCLUDING ANY PADDING and ADHESIVE.

NEW WORK KEYNOTES

1. PROVIDE 1/2" PRIMED AND PAINTED GWB AT FINISHED SIDE OF NEW / EXISTING WOOD STUDS.
2. PROVIDE NEW PRIMED AND PAINTED WOOD BASE.
3. PROVIDE NEW 1/2" PRIMED AND PAINTED MOISTURE RESISTANT GWB.
4. PROV. NEW WOOD STUD and PTD. GWB. COLUMN ENCLOSURE.
5. FINISHED AREA OF WORK, INCLUDING STAIRS, TO RECEIVE NEW CARPET and PADDING PER FINISH SCHEDULE.
6. PROV. NEW CERAMIC TILE FLOORING, COLOR TO BE SELECTED BY OWNER.

FINISH NOTES

1.) PRIME AND PAINT ROOM WITH 2 COATS OF BENJAMIN MOORE WHITE-EGGSHELL
2.) PRIME AND PAINT ALL WOOD MOLDINGS AND TRIM.-COLOR TO BE SELECTED BY OWNER.
3.) ROOMS TO HAVE "SHAW" LIVING BERBER SAND LOOP 12 IN. X 12 IN. CARPET TILES-PROVIDE 15 TILES FOR FUTURE REPLACEMENT.
4.) DO NOT PROCEED WITH CHANGE IN SCOPE OF WORK WITHOUT WRITTEN APPROVAL FROM OWNER OR ARCHITECT.

WALL TYPES

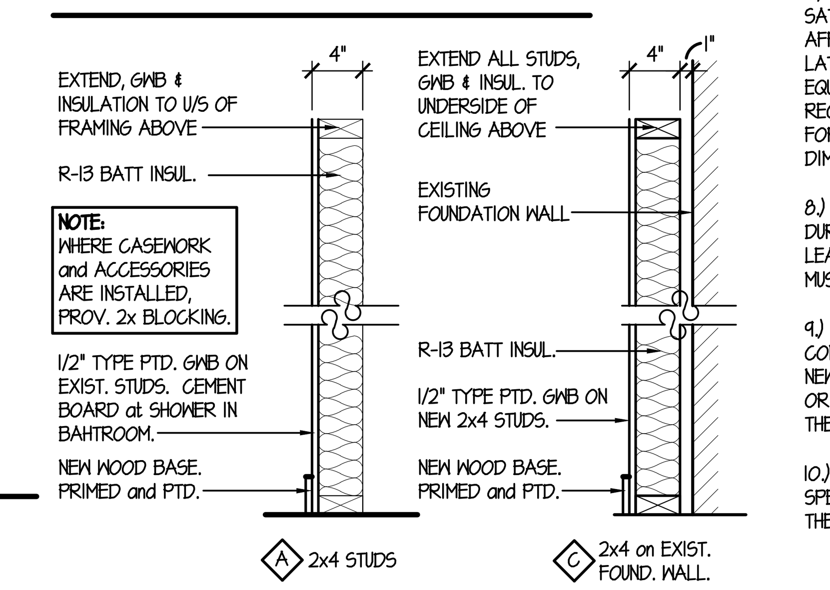

SCOPE OF WORK

- REFER TO SPECIFICATIONS FOR ADDITIONAL DESCRIPTIONS.

BASE BID ITEMS:

1. SELECTIVE DEMOLITION, INCLUDING REMOVAL OF INTERIOR BASEMENT WALL PANELING.
2. REMOVAL OF ALL EXISTING INTERIOR BASEMENT DOORS.
3. REMOVAL OF EXISTING BAR/SETEE AREA.
4. MOLD and WATER REMEDIATION OF ENTIRE BASEMENT, INCLUDING WOOD STUDS. RE: SPEC. SECTION 02092.
5. INSTALLATIN OF NEW 1/2" GWB (FINISH SIDE), PRIME AND PAINT.
6. REINSTALLATION OF EXISTING BATHROOM FIXTURES, INCLUDING BATHROOM ACCESSORIES.
7. INSTALLATION OF NEW INT. DOORS, CASING, AND TRIM. PRIME AND PAINT.
8. INSTALL NEW CARPET AND PADDING.

DEMOLITION NOTES:

1.) ALL DEMOLITION SHOWN ON THESE DRAWINGS IS DIAGRAMMATIC. CONTRACTOR IS RESPONSIBLE FOR ALL DEMOLITION AND RELOCATION WORK NECESSARY TO PROPERLY COMPLETE THE PROJECT, REGARDLESS IF DEMOLITION WORK IS SHOWN OR NOT ON DRAWINGS.

2.) ALL DEMOLITION WORK SHALL BE DONE IN STRICT ACCORDANCE WITH THE LATEST STATE OF CONNECTICUT BUILDING AND FIRE CODES (SEE CODE DATA).

3.) WORK PERMITS SHALL BE THE CONTRACTOR'S RESPONSIBILITY. THE CONTRACTOR SHALL SECURE ALL REQUIRED LOCAL AND STATE OF CONNECTICUT PERMITS PRIOR TO COMMENCING WORK. ALL COSTS OF SECURING PERMITS SHALL BE PAID BY THE CONTRACTOR.

4.) THE CONTRACTOR IS RESPONSIBLE FOR LEGAL DISPOSAL OF ALL CONSTRUCTION WASTE AND REMOVED ELEMENTS, UNLESS NOTED OTHERWISE ON DRAWINGS. DEBRIS SHALL BE DISPOSED OF ON A DAILY BASIS.

5.) ALL EXISTING OR NEW CONSTRUCTION DISTURBED OR DAMAGED DURING THE COURSE OF CONSTRUCTION SHALL BE RESTORED TO MATCH EXISTING ADJACENT SURFACES OR ORIGINAL CONSTRUCTION.

6.) THE CONTRACTOR SHALL PROVIDE ALL STRUCTURAL SHORING, BRACING AND SHEATHING AS REQUIRED FOR SAFETY AND FOR PROPER EXECUTION OF WORK AND HAVE SAME REMOVED WHEN WORK IS COMPLETED.

7.) THE OWNER RETAINS THE RIGHT TO SALVAGE ANY DEMOLISHED OR CONTRACTOR REMOVED MATERIAL(S). CONTACT OWNER BEFORE REMOVAL FROM SITE

DRAWING NOTES:

1.) CONTRACTOR TO FIELD MEASURE ALL SPACES AND VERIFY ALL EXISTING CONDITIONS PRIOR TO START OF WORK.

2.) NOTIFY ARCHITECT IMMEDIATELY OF DISCREPANCIES BETWEEN DRAWINGS AND GENERAL CONDITIONS.

3.) DRAWINGS ARE + OR - AND ARE BASED ON BEST INFORMATION AVAILABLE AT THE TIME OF PRODUCTION.

4.) DO NOT SCALE DRAWINGS.

5.) DO NOT PROCEED WITH CHANGE IN SCOPE OF WORK WITHOUT WRITTEN APPROVAL FROM OWNER OR ARCHITECT.

GENERAL CONSTRUCTION NOTES:

1.) ALL WORK SHALL BE DONE IN STRICT ACCORDANCE WITH APPLICABLE STATE OF CONNECTICUT BUILDING AND FIRE CODES (SEE CODE DATA).

2.) WORK PERMITS SHALL BE THE CONTRACTOR'S RESPONSIBILITY. THE CONTRACTOR SHALL SECURE ALL REQUIRED LOCAL AND STATE OF CONNECTICUT PERMITS PRIOR TO COMMENCING WORK. ALL COSTS OF SECURING PERMITS SHALL BE PAID BY THE CONTRACTOR.

3.) ALL MATERIALS AND EQUIPMENT THAT WILL BE USED IN THE CONSTRUCTION OF THIS PROJECT ARE SUBJECT TO THE APPROVAL OF THE OWNER. ALL MATERIALS AND EQUIPMENT REQUIRED BY NOTES OR SPECIFICATIONS SHALL BE SUBMITTED IN THE FORM OF SAMPLES AND SHOP DRAWINGS FOR APPROVAL BY OWNER. WHERE COLOR SELECTIONS ARE MADE, COMPLETE SAMPLES SHALL BE FURNISHED TO THE OWNER.

4.) ALL EXISTING OR NEW CONSTRUCTION DISTURBED OR DAMAGED DURING THE COURSE OF THIS WORK SHALL BE RESTORED TO MATCH EXISTING ADJACENT SURFACES OR ORIGINAL CONSTRUCTION.

5.) PRECAUTION MUST BE EXERCISED AT ALL TIMES FOR THE PROTECTION OF PERSONS AND PROPERTY. THE SAFETY PROVISIONS OF APPLICABLE LAWS AND CONSTRUCTION CODES MUST BE OBSERVED. CONTRACTOR SHALL TAKE OR CAUSE TO BE TAKEN SUCH ADDITIONAL SAFETY AND HEALTH MEASURES AS ARE REASONABLY NECESSARY. MACHINERY, EQUIPMENT AND OTHER HAZARDS GUARDED IN ACCORDANCE WITH SAFETY PROVISIONS OF THE "MANUAL OF ACCIDENT PREVENTION IN CONSTRUCTION" PUBLISHED BY THE ASSOCIATED GENERAL CONTRACTORS OF AMERICA, TO THE EXTENT THAT SUCH PROVISIONS ARE NOT IN CONTRAVENTION OF APPLICABLE LAWS.

6.) IT SHALL BE THE RESPONSIBILITY OF THE CONTRACTOR TO PROTECT AND PRESERVE IN OPERATIONAL CONDITION ALL UTILITIES TRAVERSING THE WORK AREA. DAMAGE TO ANY UTILITY DUE TO WORK UNDER THIS CONTRACT SHALL BE REPAIRED TO THE SATISFACTION OF THE OWNER AT NO ADDITION COST TO THE OWNER. UTILITY SHUT DOWNS MUST BE COORDINATED WITH THE OWNER.

7.) EACH BIDDER WILL BE HELD TO HAVE EXAMINED THE PREMISES AND SATISFIED HIMSELF WITH THE CONDITIONS WHICH WOULD IN ANY MANNER AFFECT THE WORK UNDER THE CONTRACT OR ALTERNATE WORK AND HAVE NO LATER CLAIMS FOR EXTRA COMPENSATION FOR LABOR, MATERIALS AND EQUIPMENT WHICH COULD HAVE BEEN FORESEEN BY SUCH EXAMINATION WILL BE RECOGNIZED. THE CONTRACTOR SHALL TAKE ALL NECESSARY MEASUREMENTS FOR HIS WORK AT THE SITE AND SHALL VERIFY ALL MEASUREMENTS AND DIMENSION GIVEN ON THE DRAWINGS. DO NOT SCALE DRAWINGS.

8.) PROVIDE TEMPORARY WEATHER PROTECTION AND SECURITY DEVICES DURING THE PERIOD OF CONSTRUCTION. G.C. TO INSURE THAT NO WATER LEAKAGE OCCURS TO EXISTING SPACES. ANY DAMAGE THAT DOES OCCUR MUST BE REPAIRED BY THE G.C. TO IT'S PRE-CONSTRUCTION CONDITION.

9.) WHERE FINISHES ARE SHOWN TO BE REMOVED FROM EXISTING CONSTRUCTION, REPAIR AND PATCH REMAINING SUBSTRATE AND PREPARE FOR NEW FINISH. REPAIR AND PATCH ALL REMAINING SUBSTRATES THAT WERE ORIGINALLY CONCEALED BY EXISTING FINISHES, BUT WILL NOW BE EXPOSED IN THE NEW CONSTRUCTION.

10.) ALL TRADES SHALL PROVIDE ALL DRAWINGS,. DOCUMENTS, OR SPECIFICATIONS REQUIRED TO SECURE NECESSARY PERMITS RELATIVE TO THEIR TRADES.

CAPITAL STUDIO
architects LLC
1379 MAIN STREET 860.289.3262
EAST HARTFORD CT. 06108 fax 860.289.3163

THE STATE OF CONNECTICUT DEPARTMENT OF HOUSING (DOH) COMMUNITY DEVELOPMENT BLOCK GRANT - DISASTER RECOVERY (CDBG-DR) OWNER OCCUPIED REHABILITATION and REBUILDING PROGRAM (OORR)

MOBILIO RESIDENCE BASEMENT REHABILITATION APPLICATION No. 2028
167 Pleasant View Road
Derby, CT 06418

date	description	no.

revisions

FLOOR PLANS, DETAILS and NOTES

A-1

date	27 MAY 2014
drawn	BD
scale	AS SHOWN
checked	JP/DH
project no.	1347-16
application no.	2028

Y:\2013 Projects\13-47_CT DOH Disaster Relief for Hurricane Sandy\1347-16 2028 167 Pleasant View Road Derby - Mobilio\1347-16 Drawings\Cd\1347-16 2028 CD Plans and Details.dwg
6/4/2014 1:29 PM