Copyright © 2011 Capital Studio Architects, LLC

THE STATE OF CONNECTICUT
DEPARTMENT OF HOUSING (DOH)
COMMUNITY DEVELOPMENT BLOCK GRANT - DISASTER RECOVERY (CDBG-DR)
OWNER OCCUPIED REHABILITATION and REBUILDING PROGRAM (OORR)

January 26, 2015

csa project 1347-02
Issued for:
Bidding and Construction

QUI TRANSTULIT SUSTINET

PROJECT SITE

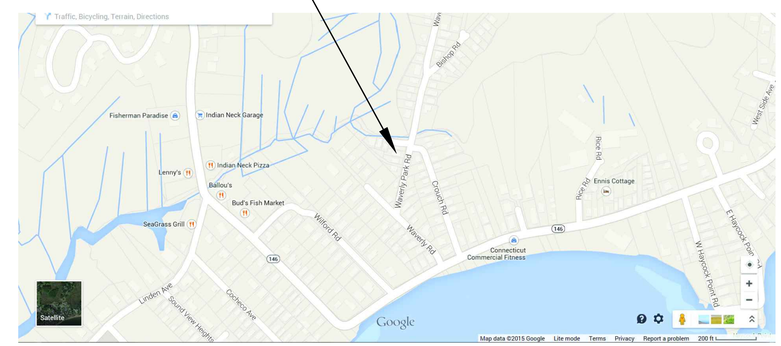

LOCATION PLAN
not to scale

Reilly Residence Rehabilitation and Mitigation
Application No. 1180
14 Waverly Park Road
Branford, CT 06405

Architect

Capital Studio Architects, LLC
1379 Main Street
East Hartford, Connecticut 06108
tel: 860.289.3262 fax: 860.289.3163

Civil / Site Engineer

Design Professionals, Inc.
PO Box 1167
425 Sullivan Avenue
South Windsor, CT 06074
tel: 860.291.8755 fax: 860.291.8757

Environmental Consultant

Eagle Environmental, Inc.
8 South Main Street, Suite 3
Terryville, Connecticut 06786
tel: 860.589.8257 fax: 860.585.7034

Structural Engineer

William M. Lapoint, PE
1379 Main Street
East Hartford, CT 06108
tel: 860.622.0840

MEP Engineer

Consulting Engineering Services
811 Middle Street
Middletown, CT 06457
tel: 860.632.1682

Drawing List

TITLE SHEET
A-0.0 GENERAL NOTES
C-1 PLOT PLAN
S-1.0 FOUNDATION PLAN
S-1.1 FIRST FLOOR FRAMING PLAN
S-2.0 SECTIONS & NOTES
A-1.0 FLOOR PLANS
A-2.0 ELEVATIONS
A-3.0 SECTIONS & DETAILS
A-4.0 STAIR DETAILS
A-4.1 DETAILS & SCHEDULES
MEP-1.0 FLOOR PLANS
MEP-1.1 DETAILS & SCHEDULES
MEP-2.0 SPECIFICATIONS

Copyright ©2015 Capital Studio Architects, LLC

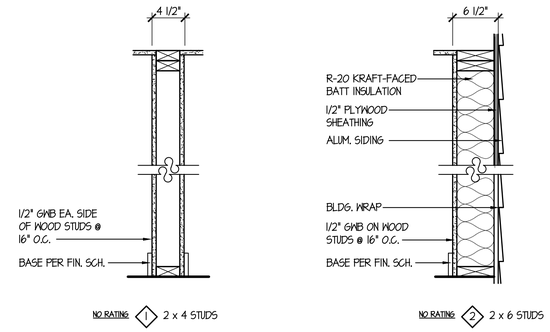

5 / A-0.0 PARTITION TYPES

NO SCALE

1. ALL WORK SHALL BE DONE IN STRICT ACCORDANCE WITH APPLICABLE STATE OF CONNECTICUT BUILDING AND FIRE CODES AND SAFETY CODES. BEFORE WORK BEGINS CONTRACTOR IS TO CONTACT CALL BEFORE YOU DIG AT 1-800-922-4455 TO LOCATE ALL UNDERGROUND UTILITIES.

2. WORK PERMITS SHALL BE THE CONTRACTOR'S RESPONSIBILITY. THE CONTRACTOR SHALL SECURE ALL REQUIRED LOCAL AND STATE OF CONNECTICUT PERMITS PRIOR TO COMMENCING WORK. ALL COSTS OF SECURING PERMITS SHALL BE PAID BY THE OWNER.

3. ALL MATERIALS AND EQUIPMENT THAT WILL BE USED IN THE CONSTRUCTION OF THIS PROJECT ARE SUBJECT TO THE APPROVAL OF THE OWNER. ALL MATERIALS AND EQUIPMENT REQUIRED BY NOTES OR SPECIFICATIONS SHALL BE SUBMITTED IN THE FORM OF SAMPLES AND SHOP DRAWINGS FOR APPROVAL BY ARCHITECT. WHERE COLOR SELECTIONS ARE MADE, COMPLETE SAMPLES SHALL BE FURNISHED TO THE ARCHITECT.

4. ALL EXISTING OR NEW CONSTRUCTION DISTURBED OR DAMAGED DURING THE COURSE OF THIS WORK SHALL BE RESTORED TO MATCH EXISTING ADJACENT SURFACES OR ORIGINAL CONSTRUCTION.

5. PRECAUTION MUST BE EXERCISED AT ALL TIMES FOR THE PROTECTION OF PERSONS AND PROPERTY. THE SAFETY PROVISIONS OF APPLICABLE LAWS AND CONSTRUCTION CODES MUST BE OBSERVED. CONTRACTOR SHALL TAKE OR CAUSE TO BE TAKEN SUCH ADDITIONAL SAFETY AND HEALTH MEASURES AS ARE REASONABLY NECESSARY. MACHINERY, EQUIPMENT AND OTHER HAZARDS GUARDED IN ACCORDANCE WITH SAFETY PROVISIONS OF THE "MANUAL OF ACCIDENT PREVENTION IN CONSTRUCTION" PUBLISHED BY THE ASSOCIATED GENERAL CONTRACTORS OF AMERICA, TO THE EXTENT THAT SUCH PROVISIONS ARE NOT IN CONTRADICTION OF APPLICABLE LAWS.

6. IT SHALL BE THE RESPONSIBILITY OF THE CONTRACTOR TO PROTECT AND PRESERVE IN OPERATIONAL CONDITION ALL UTILITIES TRAVERSING THE WORK AREA. DAMAGE TO ANY UTILITY DUE TO WORK UNDER THIS CONTRACT SHALL BE REPAIRED TO THE SATISFACTION OF THE OWNER AT NO ADDITION COST TO THE OWNER. UTILITY SHUT DOWNS MUST BE COORDINATED WITH THE OWNER.

7. EACH BIDDER WILL BE HELD TO HAVE EXAMINED THE PREMISES AND SATISFIED HIMSELF WITH THE CONDITIONS WHICH WOULD IN ANY MANNER AFFECT THE WORK UNDER THE CONTRACT AND NO LATER CLAIMS FOR EXTRA COMPENSATION FOR LABOR, MATERIALS AND EQUIPMENT WHICH COULD HAVE BEEN FORSEEN BY SUCH EXAMINATION WILL BE RECOGNIZED.

8. THE CONTRACTOR SHALL TAKE ALL NECESSARY MEASUREMENTS FOR HIS WORK AT THE SITE AND SHALL VERIFY ALL MEASUREMENTS AND DIMENSION GIVEN ON THE DRAWINGS. DO NOT SCALE DRAWINGS.

9. DO NOT PROCEED WITH CHANGE IN SCOPE OF WORK WITHOUT WRITTEN APPROVAL FROM OWNER OR ARCHITECT.

10. ALL DEMOLITION SHOWN ON THESE DRAWINGS IS DIAGRAMMATIC. CONTRACTOR IS RESPONSIBLE FOR ALL DEMOLITION AND RELOCATION WORK NECESSARY TO PROPERLY COMPLETE THE PROJECT, REGARDLESS IF DEMOLITION WORK IS SHOWN OR NOT ON DRAWINGS.

11. THE CONTRACTOR IS RESPONSIBLE FOR LEGAL DISPOSAL OF ALL CONSTRUCTION WASTE AND REMOVED ELEMENTS, UNLESS NOTED OTHERWISE ON DRAWINGS. DEBRIS SHALL BE DISPOSED OF ON A DAILY BASIS.

12. THE CONTRACTOR SHALL PROVIDE ALL STRUCTURAL SHORING, BRACING AND SHEATHING AS REQUIRED FOR SAFETY AND FOR PROPER EXECUTION OF WORK AND HAVE SAME REMOVED WHEN WORK IS COMPLETED.

13. THE OWNER RETAINS THE RIGHT TO SALVAGE ANY DEMOLISHED OR CONTRACTOR REMOVED MATERIAL(S). CONTACT OWNER BEFORE REMOVAL FROM SITE

1 / A-0.0 GENERAL CONSTRUCTION and DEMOLITION NOTES

NO SCALE

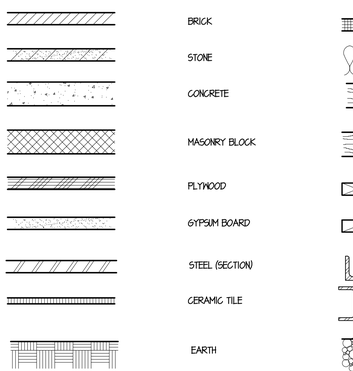

4 / A-0.0 MATERIALS LEGEND

NO SCALE

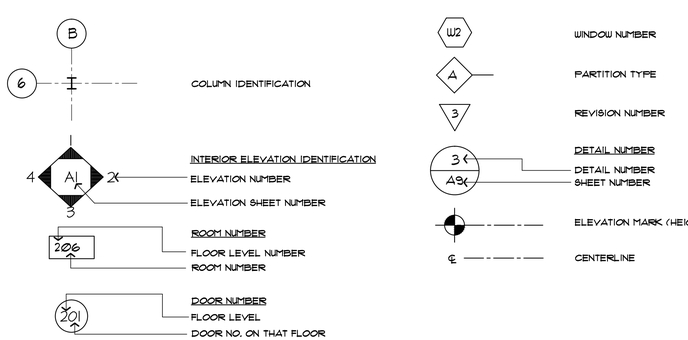

3 / A-0.0 SYMBOLS LEGEND

NO SCALE

A.C.T.	ACOUSTICAL CEILING TILE
ACOUST.	ACOUSTIC
ALT.	ALTERNATE
ALUM.	ALUMINUM
ARCH.	ARCHITECTURAL
ASB.	ASBESTOS
A.T.	ASPHALT TILE
@	AT
B.C.	BRICK COURSE
BD.	BOARD
B.F.	BOTTOM OF FOOTING
BLDG.	BUILDING
CAB.	CABINET
C/C	CENTER TO CENTER
C.T.	CERAMIC TILE
C.J.	CONTROL JOINT
C.L.	CENTER LINE
CLG.	CEILING
C.O.	CASED OPENING
COL.	COLUMN
COMP.	COMPACTED
CONC.	CONCRETE
CONN.	CONNECTION
CONT.	CONTINUOUS
CORR.	CORRIDOR
CSK.	COUNTERSINK
D.F.	DRINKING FOUNTAIN
DET.	DETAIL
DWG.	DRAWING
DN.	DOWN
DP.	DAMPPROOFING
ELECT.	ELECTRICAL
E.J.	EXPANSION JOINT
ELEV.	ELEVATION (ELEVATOR)
E.P.	ELECTRICAL PANEL
EQUIP.	ELECTRICAL WATER COOLER
E.W.C.	
EXP.	EXPANSION
F.A.P.	FIRE ALARM PANEL
F.D.	FLOOR DRAIN
F.E.	FIRE EXTINGUISHER
F.H.C.	FIREHOSE CABINET
FIN.	FINISH
FL.	FLOOR
F/M	FACE OF MASONRY
F/F	FACE OF FRAMING
FDN	FOUNDATION
F.R.	FIRE RATED
FTG.	FOOTING
G.M.U.	GLAZED MASONRY UNIT
GWB	GYPSUM WALLBOARD
GALV.	GALVANIZED
GL.	GLASS
GLZ.	GLAZING
GYP. BD.	GYPSUM WALL BOARD
HGT.	HEIGHT
H.M.	HOLLOW METAL
H.P.	HIGH POINT
HDWD.	HARDWOOD
HDWR.	HARDWARE
I.D.	INSIDE DIAMETER
INSUL.	INSULATION
JAN.	JANITOR
JT.	JOINT
LAM.	LAMINATED
L.P.	LOW POINT
LCKR.	LOCKER
MAS.	MASONRY
MAT.	MATERIAL
MAX.	MAXIMUM
M.C.	MASONRY COURSE
MECH.	MECHANICAL
MEM.	MEMBRANE
MFR.	MANUFACTURER
MIN.	MINIMUM
MIR.	MIRROR
MISC.	MISCELLANEOUS
M.O.	MASONRY OPENING
N.I.C.	NOT IN CONTRACT
NO.	NUMBER
N.T.S.	NOT TO SCALE
O/C	ON CENTER
O.D.	OUTSIDE DIAMETER
OPNG.	OPENING
OPP.	OPPOSITE
PERF.	PERFORATED
P.T.	PRESSURE TREATED
R.	RISER (RADIUS)
R.B.	RUBBER BASE
REF.	REFERENCE
REINF.	REINFORCING
R.L.	RAIN LEADER
RM.	ROOM
SIM.	SIMILAR
SPEC.	SPECIFICATION
STL.	STEEL
STRUCT.	STRUCTURAL
STOR.	STORAGE
SUSP.	SUSPENDED
TERR.	TERRAZZO (TERRACE)
T&G.	TONGUE AND GROOVE
THRESH.	THRESHHOLD
T.	TREAD
T/S	TOP OF SLAB
T/STL	TOP OF STEEL
T/W	TOP OF WALL
TYP.	TYPICAL
V.C.T.	VINYL COMPOSITE TILE
V.B.	VINYL BASE
VERT.	VERTICAL
VEST.	VESTIBULE
V.I.F.	VERIFY IN FIELD
V.W.C.	VINYL WALL COVERING
W/	WITH
W.C.	WATER CLOSET
WD.	WOOD
WIND.	WINDOW
W.P.	WATERPROOFING

2 / A-0.0 ABBREVIATIONS

NO SCALE

CAPITAL STUDIO architects LLC
1379 MAIN STREET EAST HARTFORD CT. 06108
860.289.3262 fax 860.289.3163

THE STATE OF CONNECTICUT DEPARTMENT OF HOUSING (DOH) COMMUNITY DEVELOPMENT BLOCK GRANT - DISASTER RECOVERY (CDBG-DR) OWNER OCCUPIED REHABILITATION and REBUILDING PROGRAM (OORR)

REILLY RESIDENCE REHABILITATION and MITIGATION APPLICATION No. 1180
14 Waverly Park Road
Branford, CT 06405

date	description	no.

revisions

GENERAL INFORMATION

ISSUED FOR:
BIDDING and CONSTRUCTION

A-0.0

date	26 JAN 2015
drawn	BD/PM/NF
scale	AS SHOWN
checked	JP/DH
project no.	1341-02
application no.	1180

Zoning Information

ZONE: R-2 Residential

ITEM	REQUIRED	EXISTING CONDITIONS	PROPOSED CONDITIONS
Minimum Lot Area	4,500 s.f.	3,450 s.f.*	3,450 s.f.*
Minimum Lot Area per Unit	4,000 s.f.	3,450 s.f.*	3,450 s.f.*
Minimum Lot Frontage	50 feet	36.20 feet*	36.20 feet*
Minimum Square	50 feet	36.2 feet*	36.2 feet*
Minimum Front Yard Setback	15 feet	29.4 feet	17.79 feet
Minimum Side Yard Setback	10 feet	6.5 feet*	6.5 feet*
Minimum Rear Yard Setback	20 feet	12.3 feet*	12.3 feet*
Maximum Building Height	35 feet	16.7 feet	27.9 feet
Maximum Floor Area Ratio	0.50	0.28	0.28
Maximum Lot Coverage	0.25	0.35*	0.37**

* Existing non-conformity

** Requesting Variance

Note:
Building setbacks reported in above chart does not include existing sheds on the property.

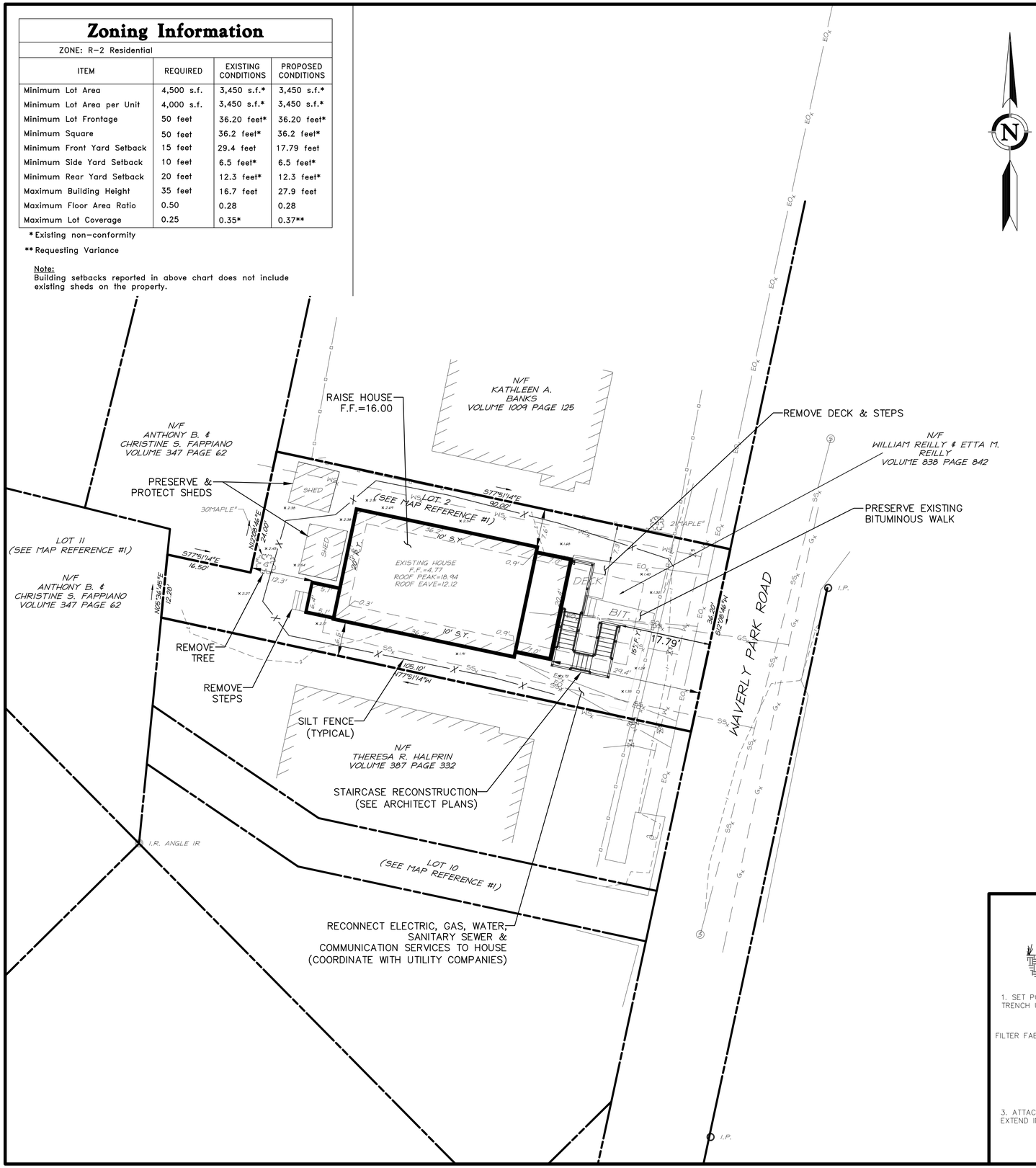

LEGEND

EXISTING	DESCRIPTION
COMMUNICATION	
C_X	OVERHEAD COMM. LINES (CABLE, TEL, ETC.)
DOMESTIC WATER	
W_X	WATER MAIN
WS_X	WATER SERVICE
	WATER VALVE
	FIRE HYDRANT
LIGHTING	
	POLE MOUNTED LIGHT
NATURAL GAS	
G_X	GAS MAIN
POWER	
EO_X	ELECTRICAL LINES, OVERHEAD
EU_X	ELECTRICAL LINES, UNDERGROUND
	UTILITY POLE
PROPERTY	
	PROPERTY LINE
	IRON PIN
	MONUMENT
ROADS	
	GUARD RAIL
SITE FEATURES	
X X	BARBED WIRE FENCE
	CHAIN LINK FENCE
	RAIL FENCE
	STOCKADE FENCE
+ +	WIRE FENCE
OR	TREE
	TREE LINE
SANITARY SEWER	
S_X	SANITARY SEWER MAIN
S	SANITARY SEWER MANHOLE
STORM SEWER	
D_X	STORM DRAIN PIPE
D	STORM DRAIN MANHOLE
	CURB INLET
	CATCH BASIN
TOPOGRAPHY	
95	CONTOUR
X61.95	SPOT ELEVATION
WETLANDS	
	WETLANDS LINE

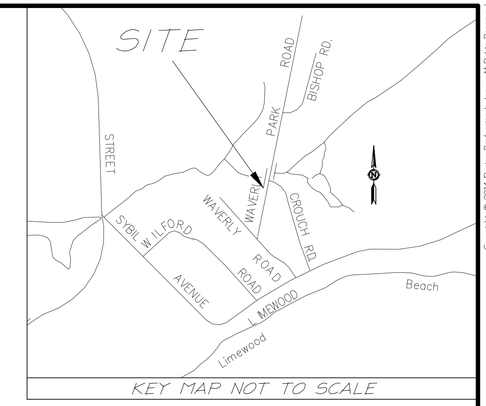

SEDIMENTATION AND EROSION CONTROL:

1. ALL EROSION CONTROL MEASURES SHALL BE CONSTRUCTED IN ACCORDANCE WITH THE "GUIDELINES FOR SOIL EROSION AND SEDIMENT CONTROL" BY THE CONNECTICUT COUNCIL FOR SOIL AND WATER CONSERVATION.
2. EROSION AND SEDIMENTATION CONTROL MEASURES SHALL BE INSTALLED PRIOR TO CONSTRUCTION, AND SHALL BE MAINTAINED OR REPLACED AS NECESSARY.
3. CONTRACTOR IS RESPONSIBLE FOR IMPLEMENTATION AND MAINTENANCE OF ALL SEDIMENTATION AND EROSION CONTROL MEASURES SHOWN ON THESE PLANS. ANY PROPOSED CHANGES TO THIS PLAN MUST BE APPROVED BY THE ENGINEER AND/OR THE TOWN OF BRANFORD.
4. CONTRACTOR SHALL BE RESPONSIBLE FOR SWEEPING EXISTING ROADS & DRIVEWAYS AS DEEMED NECESSARY.
5. AREAS TO BE LEFT BARE FOR MORE THAN 15 DAYS SHALL BE TREATED WITH AIR DRIED WOOD CHIP MULCH OR SEEDED WITH PERENNIAL RYE-GRASS, UNTIL FINAL GRADING AND STABILIZATION EFFORTS TAKE PLACE.

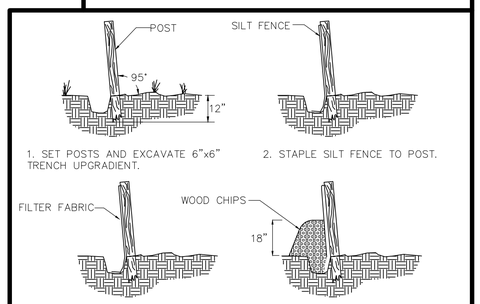

SILT FENCE
N.T.S.

NOTES:
1. PROPERTY IS IN THE R-2 ZONE.
2. PARCEL CONTAINS 3,450 SQUARE FEET OR 0.079 ACRES.
3. HORIZONTAL CONTROL IS BASED ON THE NORTH AMERICAN DATUM OF 1983/2012 (NAVD 83/2012) AND VERTICAL CONTROL IS BASED ON THE NORTH AMERICAN VERTICAL DATUM OF 1988 (NAVD 88).
4. PROPERTY FALLS WITHIN THE LIMITS OF A FLOOD HAZARD ZONE "AE" (EL=12) AS DEPICTED ON: "FIRM FLOOD INSURANCE RATE MAP NEW HAVEN COUNTY, CONNECTICUT (ALL JURISDICTIONS) PANEL 468 OF 635 MAP NUMBER 09009C0468J MAP REVISED JULY 8,2013 FEDERAL EMERGENCY MANAGEMENT AGENCY.
5. EXISTING HOUSE, SHEDS AND DECK ARE NON-COMFORMING TO CURRENT ZONING REQUIREMENTS WITH RESPECT TO SIDE AND REAR YARD REQUIREMENTS.
6. PROPERTY IS TOGETHER WITH THE RIGHT TO PASS AND REPASS OVER, ALONG AND UPON THE ROADS KNOWN AS WAVERLY ROAD, AND CROUCH ROAD AND TO THE USE IN COMMON THE BEACH LOCATED AT THE SOUTHERLY ENDS OF WAVERLY AND CROUCH ROADS FOR BOATING AND RECREATIONAL PURPOSES.
7. PROPERTY IS TOGETHER WITH THE RIGHT TO USE IN COMMON LOT 13 FOR RECREATIONAL PURPOSES ONLY.
8. THE PROPERTY IS TOGETHER WITH THE RIGHT TO USE IN COMMON LOT 10 AND LOT 11 AS SHOWN ON MAP REFERENCE #1 FOR THE PURPOSE OF PASSING AND REPASSING OVER THE SAME LOT 13 AS SHOWN ON SAID MAP.
9. PROPERTY TOGETHER WITH THE RIGHT TO THE USE LOT 11 AS SHOWN ON SAID MAP FOR THE PURPOSE OF PASSING AND REPASSING OVER THE SAME TO SAID LOT 2.
10. TOGETHER WITH THE RIGHT TO USE IN COMMON WITH OTHERS LOT 11 FAR A DRAINAGE BED TO BE MAINTAINED BY THE OWNERS OF LOTS 1,2,3,4,5,6,&7 AS SHOWN ON MAP REFERENCE #1.
11. UNDERGROUND UTILITY, STRUCTURE AND FACILITY LOCATIONS DEPICTED AND NOTED HEREON HAVE BEEN COMPILED, IN PART, FROM RECORD MAPPING SUPPLIED BY THE RESPECTIVE UTILITY COMPANIES OR GOVERNMENTAL AGENCIES, FROM PAROL TESTIMONY AND FROM OTHER SOURCES. THESE LOCATIONS MUST BE CONSIDERED AS APPROXIMATE IN NATURE. ADDITIONALLY, OTHER SUCH FEATURES MAY EXIST ON THE SITE. THE EXISTENCE OF WHICH ARE UNKNOWN TO DESIGN PROFESSIONALS, INC. THE SIZE, LOCATION AND EXISTENCE OF ALL SUCH FEATURES MUST BE FIELD DETERMINED AND VERIFIED BY THE APPROPRIATE AUTHORITIES PRIOR TO CONSTRUCTION.
12. CONTRACTOR SHALL CONTACT "CALL BEFORE YOU DIG" FOR UNDERGROUND UTILITY MARKING AT LEAST TWO FULL WORKING DAYS PRIOR TO START OF CONSTRUCTION: 1-800-922-4455 OR WWW.CBYD.COM.

MAP REFERENCES:
1. MAP OF LAND OF THOMAS F AND PAULINE M. FITZPATRICK WAVERLY PARK ROAD, BRANFORD, CONN. SCALE 1"=20' JUNE 16,1953 REVISED JUNE 24, 1953 AND SEPT. 4,1953 BY JAMES WESSON PHELPS, L.S.
2. SOUTHERN CONNECTICUT REGIONAL WATER AUTHORITY SCALE 1" = 40'
3. WAVERLY ROAD BRANFORD THE SOUTHERN CONNECTICUT GAS CO. DATE DRAWN: 8-27-98 SCALE: 1" = 40' WAVERLY ROAD #0-#50

SURVEY NOTES:
1. THIS SURVEY AND MAP HAS BEEN PREPARED PURSUANT TO THE REGULATIONS OF CONNECTICUT STATE AGENCIES SECTIONS 20-300b-1 THRU 20-300b-20 AND THE "STANDARDS FOR SURVEYS AND MAPS IN THE STATE OF CONNECTICUT" AS ADOPTED BY THE CONNECTICUT ASSOCIATION OF LAND SURVEYORS, INC. ON SEPTEMBER 26, 1996.
   - TYPE OF SURVEY IS AN IMPROVEMENT LOCATION SURVEY - RECORD - AND IS INTENDED TO DEPICT THE LOCATION OF IMPROVEMENTS RELATIVE TO PROPERTY LINES.
   - THIS IS A DEPENDENT RESURVEY BASED ON MAP REFERENCE #1.
   - HORIZONTAL ACCURACY MEETS CLASS A-2 STANDARDS AND VERTICAL ACCURACY MEETS CLASS T-2 STANDARDS.

TO MY KNOWLEDGE AND BELIEF, THIS MAP IS SUBSTANTIALLY CORRECT AS NOTED HEREON.

LAWRENCE R. GEISSLER, JR., L.S. — 12327 LIC. NO.

Copyright © 2014 Design Professionals, Inc. - All Rights Reserved

Design Professionals
425 SULLIVAN AVENUE
P.O. BOX 127
SOUTH WINDSOR, CT 06074
860-291-8755 - T
860-291-8757 - F
www.designprofessionalsinc.com
CIVIL & TRAFFIC ENGINEERS / PLANNERS / SURVEYORS
GIS ANALYSTS / LANDSCAPE ARCHITECTS

- This plan is made subject to any state of facts, and original survey, that may be shown on a subsequent survey, map, or landscape architect.
- Underground utilities depicted hereon are based on available information and should be field verified prior to construction.
- Reproduction techniques used in the production of this plan can cause distortion of the original document. Do not scale from reproduced copies. Contact DPI if additional information is required.
- The signature, seal, and/or other markings on this document, or any copy or derivative thereof, are the property of Design Professionals, Inc. (DPI) as instruments of service and shall remain the property of DPI. The alteration, duplication, or distribution of this document without the express written consent of DPI is prohibited. Any alterations, duplications, or distributions of this document without the express written consent of DPI, shall be at the user's sole risk.

PREPARED FOR:
WILLIAM REILLY & RITA M. REILLY
14 WAVERLY PARK ROAD
BRANFORD, CONNECTICUT

PROJECT NO.	DATE	DRAWN BY:	CHECKED BY:
3400.1980	8-20-14	AK	AK

WILLIAM REILLY & RITA M. REILLY
14 WAVERLY PARK ROAD
BRANFORD, CONNECTICUT

REVISIONS

NO.	DATE		BY
1	9/16/2014	Add note (remove tree)	AK
2	11/7/2014	Erosion control measures	AK

PLOT PLAN

SCALE: 0 5' 10' 20'
1" = 10'

SHEET 1

File: C:\jobs\3400\1980-Reilly\AutoCad\Site Plan.dwg Layout: 1 Plotted: 2/18/2015 10:52 AM Last Saved: 2/18/2015 10:07 AM Last Saved By: Djameson

Copyright © 2014 Capital Studio Architects, LLC

CLARENCE WELTI ASSOC., INC. P.O. BOX 397 GLASTONBURY, CONN 06033	CLIENT	PROJECT NAME: REILLY RESIDENCE	
	CAPITOL STUDIO ARCHITECTS	LOCATION: 14 WAVERLY PARK ROAD, BRANFORD, CT.	
		SURFACE ELEV.	HOLE NO. B-1

	AUGER	CASING	SAMPLES	CORE BAR.	OFFSET	GROUND WATER OBSERVATIONS	START DATE 7/30/14
TYPE	HSA		SS	NQ	LINE & STA.	AT 3.0 FT. AFTER 0 HOURS	
SIZE I.D.	3.75"		1.375"	2.0"	N. COORDINATE	AT FT. AFTER HOURS	FINISH DATE 7/30/14
HAMMER WT.			140 lbs		E. COORDINATE		
HAMMER FALL			30"				

DEPTH	SAMPLE NO.	BLOWS/6"	DEPTH	A	STRATUM DESCRIPTION + REMARKS	ELEV.
0	1	2-10-14-12	0.00'-2.00'		TOPSOIL 0.42 BR. FINE-CRS. SAND, LITTLE SILT, TRACE GRAVEL, FEW COBBLES - FILL	
	2	9-13-10-3	2.00'-4.00'			
	3	1-1-1-1	4.00'-6.00'		GREY ORGANIC SILT 4.0	
5	4	1-0-1-1	6.00'-8.00'			
	5	1-1-1-1	8.00'-10.00'			
10	6	1-0-1-0	10.00'-12.00'			
	7	1-0-1-0	12.00'-14.00'			
15	8	3-4-12-80	14.00'-15.67'		WEATHERED ROCK 15.0	
					CORED BEDROCK - GNEISS 16.5 RUN #1 16.5' - 21.5' RECOVERED 58" RQD=63%	
20						
25						
30						
35					BOTTOM OF BORING @ 21.5' 21.5	

LEGEND: COL. A:
SAMPLE TYPE: D=DRY A=AUGER C=CORE U=UNDISTURBED PISTON S=SPLIT SPOON
PROPORTIONS USED: TRACE=0-10% LITTLE=10-20% SOME=20-35% AND=35-50%

DRILLER: T. CZMYR
INSPECTOR:
SHEET 1 OF 1 | HOLE NO. B-1

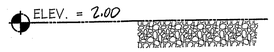

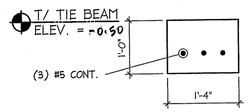

2 S-1.0 "TB-1" CONC. TIE BEAM
SCALE: 3/4"=1'-0"

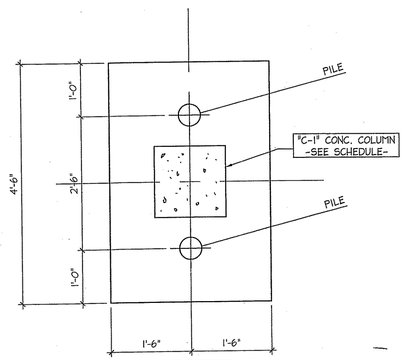

ALL PILE CAPS LOCATED ON CENTERLINE OF "C-1"

3 S-1.0 "PC-1" -PILE LOCATION PLAN
SCALE: 3/4"=1'-0"

STEEL PILE NOTES: 20 TON CAPACITY
1. ALL PILES SHALL BE DRIVEN TO REFUSAL.
2. PROVIDE ALL POINTS, SHOES, BOOTS & SPLICERS FOR PILES TO OWNER/ENGINEER FOR REVIEW.
3. ALL STEEL PILES EXPOSED TO WEATHER AT FINISH SHALL BE PAINTED.
4. STEEL SHALL BE GRADE C, Fy = 46ksi
5. PROVIDE A AS-BUILT LOCATION SURVEY OF ALL PILE LOCATIONS AT FINISH.

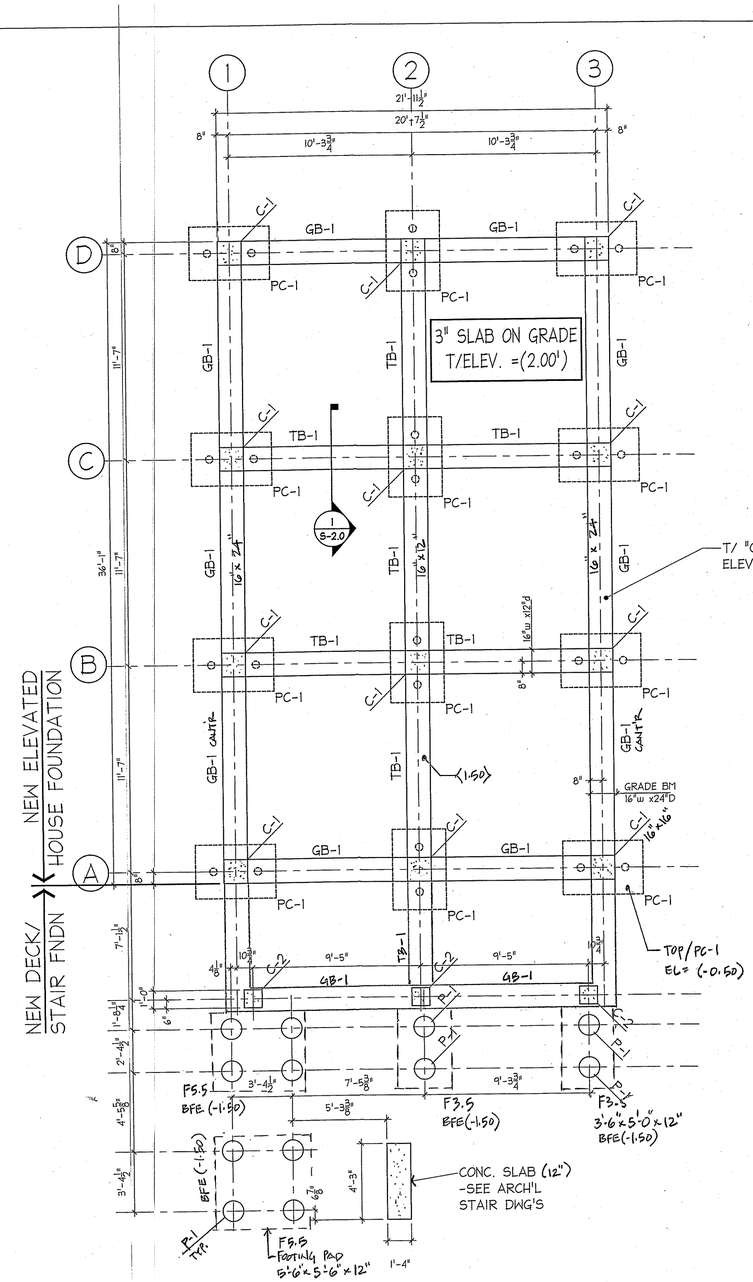

1 S-1.0 FOUNDATION PLAN
SCALE: 1/4"=1'-0"

PC-1: PILE CAP
(2) PILES/PC-1

GB-1: GRADE BEAM
16" x 24" d

NOTES:

1. TOP/ SLAB-ON-GRADE ELEV = 0'-0" (LOCAL ELEV. 5.83') UNLESS NOTED THUS (±). ALL ELEVATIONS (+ OR -)
2. SLAB-ON-GRADE SHALL BE 3" THICK (3500 psi), REINFORCED w/ 6X6 W2.0xW2.0 WWF OR FIBERMESH ALTERNATIVE ON 4" PROCESS GRAVEL OVER 10 MIL POLY VAPOR BARRIER ON 8" NEW COMPACTED STRUCTURAL FILL.
3. BOTTOM/ PILES ELEVATION = REFUSAL (-16'-0"±)
4. FIBERMESH OPTION: @ CONCRETE SLAB, SYNTHETIC FIBER UNIFORMLY DISPERSED IN CONCRETE MIXTURE @ MANUF. RECOMMENDED RATE; NOT LESS THAN 1.5lb\c.y.
5. EXTERIOR DECK:
   4"ϕ, SCHED. 40 PIPE C.R.S.
   CAP PLATE: 3/8" x8 x8
   BASE PLATE: 1/4" x12 x12 w/ (4) 3/8"ϕ A.B. (GALV.)
   ALL STEEL PRIME & RUST PROOF PAINTED

FOOTING SCHEDULE

TYPE:	SIZE:	REINF.
F-2.0	2'-0" x 2'-0" x 1'-0"	(3) #5 E.W. BOTT.
F-3.0	3'-0" x 3'-0" x 1'-0"	(3) #5 E.W. BOTT.
FS-3.5 (STRIP)	3'-6"wide x 1'-6"deep	(6) #5 L.W. #5 @ 12" S.W. (2 LAYERS)
FS-4.0 (STRIP)	4'-0"wide x 1'-6"deep	(8) #5 L.W. #5 @ 12" S.W. (2 LAYERS)

COL/PIER SCHEDULE

NO:	SIZE:	REINF.
C-1	16 x 16	(4) #6 #3 TIES @ 16"
C-2	12 x 12	(4) #5
P-1	14"ϕ SONO-TUBE	(2) #5

GRADE BEAM "GB-1"

NO:	SIZE:	REINF.
GB-1	16 x 12	(3) # 6 TOP (3) #7 BOTT #3 TIES @ 42"oc

PILE CAP "PC-1"

NO:	SIZE:	REINF.
PC-1	54 x 36 x 36"dp	(6) #6 x 2'-6" (4) #6 x 4'-0"

CAPITAL STUDIO architects LLC
1379 MAIN STREET EAST HARTFORD CT. 06108
860.289.3262 fax 860.289.3163

THE STATE OF CONNECTICUT DEPARTMENT OF HOUSING (DOH) COMMUNITY DEVELOPMENT BLOCK GRANT - DISASTER RECOVERY (CDBG-DR) OWNER OCCUPIED REHABILITATION and REBUILDING PROGRAM (OORR)

REILLY RESIDENCE REHABILITATION and MITIGATION
APPLICATION No. 1180
14 Waverly Park Road
Branford, CT 06405

WML WILLIAM M. LAPOINTE, PE
379 Main Street
East Hartford, CT 06108
www.wmlpe.com
wml@wmlpe.com

date	description	no.
revisions		
ISSUED FOR BID	- 01/26/15	

FOUNDATION PLAN

S-1.0

date	26 JAN. 2015
drawn	JB
scale	AS SHOWN
checked	WML
project no.	1347-02
application no.	1180

Copyright © 2014 Capital Studio Architects, LLC

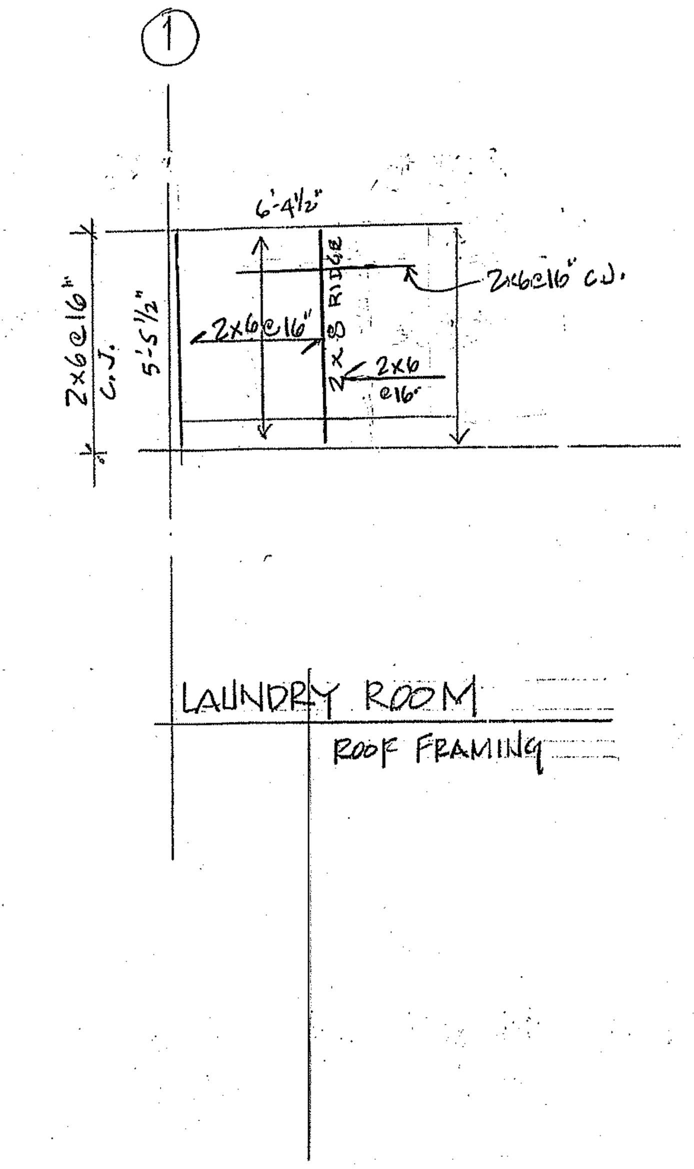

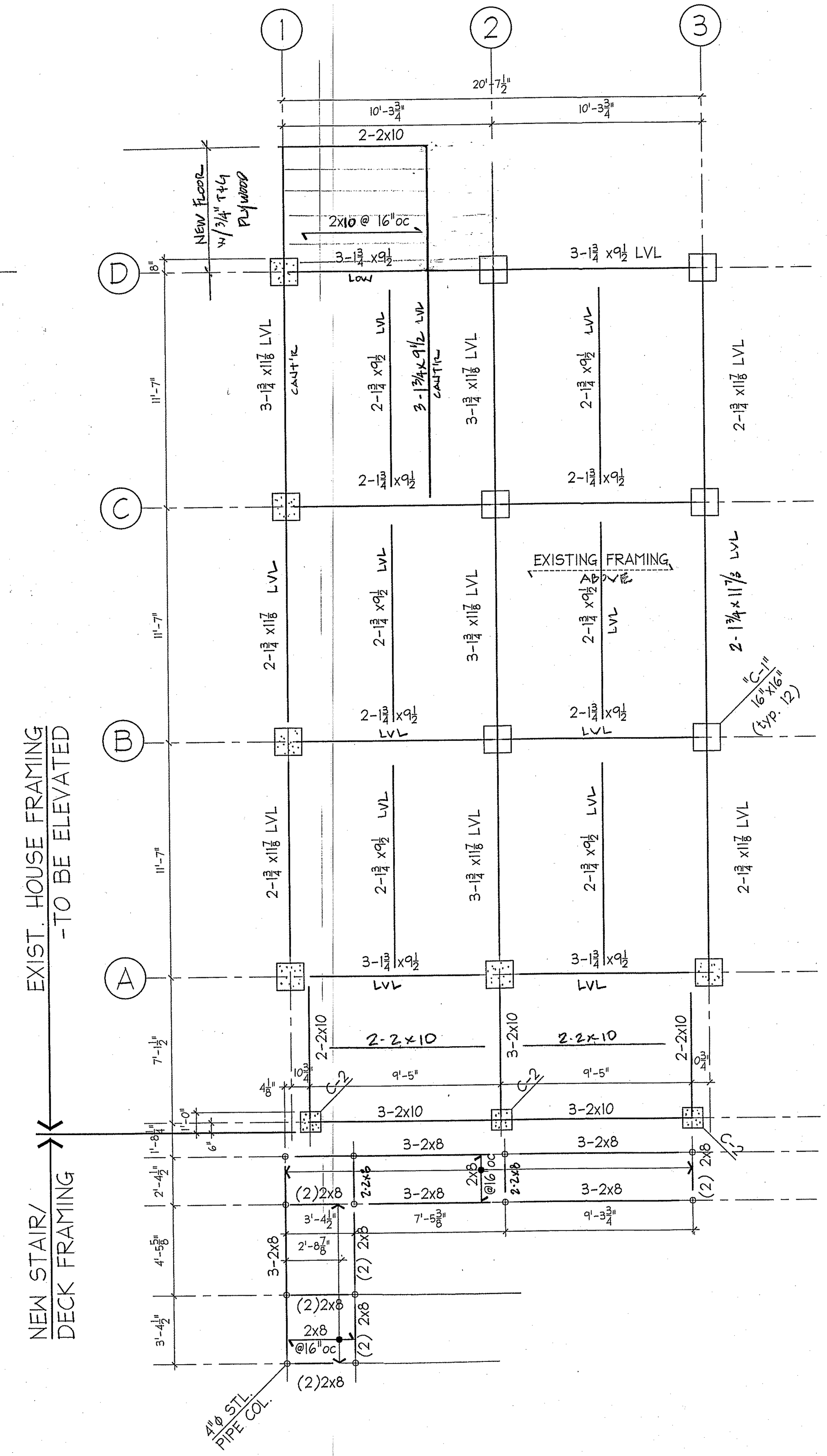

FRAMING PLAN

1 / S-1.1 SCALE: 1/4"=1'-0" 1ST FLOOR SUPPORT

NORTH

DECK NOTES:

1. TOP/EXIST. 1st FLOOR FRAMING ELEV.= 16.00'
2. ALL FASTENERS TO BE GALV. OR S.S.
3. POST CONNECTIONS:
   CAP= PC2/EPC2 -SIMPSON STRONG-TIE
   BASE= CBQ66 -SIMPSON STRONG-TIE

CAPITAL STUDIO architects LLC
1379 MAIN STREET EAST HARTFORD CT. 06108
860.289.3262 fax 860.289.3163

THE STATE OF CONNECTICUT DEPARTMENT OF HOUSING (DOH) COMMUNITY DEVELOPMENT BLOCK GRANT - DISASTER RECOVERY (CDBG-DR) OWNER OCCUPIED REHABILITATION and REBUILDING PROGRAM (OORR)

REILLY RESIDENCE REHABILITATION and MITIGATION APPLICATION No. 1180
14 Waverly Park Road
Branford, CT 06405

WML WILLIAM M. LAPOINTE P.E.
379 Main Street
East Hartford, CT 06108

date	description	no.
revisions		
ISSUED FOR BID - 01/26/15		
NEW LAUNDRY RM - 02-18-15		

1st FLOOR FRAMING PLAN

S-1.1

date	26 JAN. 2015
drawn	JB
scale	AS SHOWN
checked	WML
project no.	1347-02
application no.	1180

Copyright © 2014 Capital Studio Architects, LLC

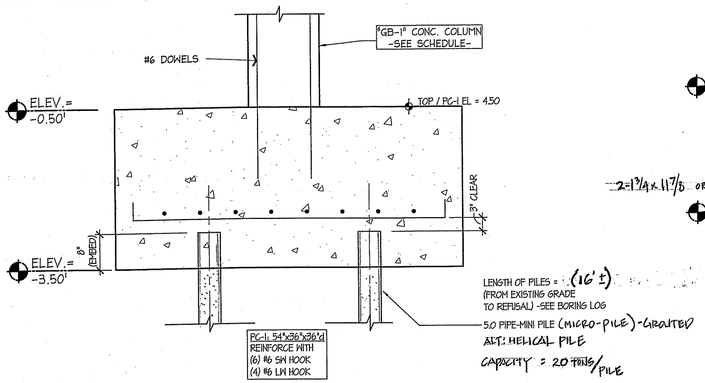

1 / S-2.0 PC-1" PILE CAP

SCALE: 3/4"=1'-0"

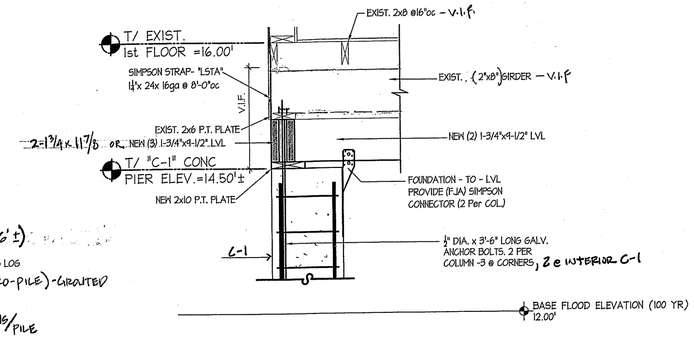

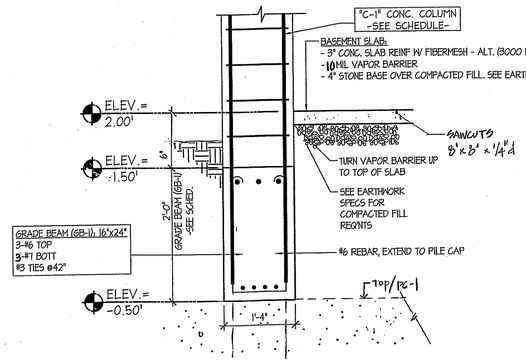

2 / S-1.1 "GB-1" -GRADE BEAM

SCALE: 3/4"=1'-0"

STRUCTURAL NOTES:

A. GENERAL

1. ALL WORK SHALL CONFORM TO THE CT BUILDING CODES: IRC 2003, & 2007 & 2009 CONNECTICUT SUPPLEMENT , ALL FEMA Requirements and the Town of Branford.
2. THE CONTRACTOR SHALL BE RESPONSIBLE FOR ALL TEMPORARY SHORING AND BRACING REQUIRED TO MAINTAIN STRUCTURAL STABILITY DURING CONSTRUCTION.
3. IF REQ'D, ALL FIELD TESTING SHALL PERFORMED BY AN ACCREDITED TESTING LABORATORY.

B. FOUNDATION

4. ALL FOUNDATIONS SHALL BEAR ON STEEL PILES and PILE CAPS. ANY UNSUITABLE SOIL CONDITION UNDER SLAB SHALL BE BROUGHT TO THE ATTENTION OF THE OWNER/ARCHITECT/ENGINEER.
5. SLAB-ON-GRADE SUB-GRADE SHALL BE COMPACTED USING A VIBRATORY TAMPER OR JUMPING SOIL RAMMER AFTER THE STRUCTURAL BACKFILL HAS BEEN APPROVED.
6. PROVIDE BACKFILL MATERIAL (Submit for Approval) FOR BELOW SLAB-ON-GRADE & SHALL BE PLACED IN LAYERS NOT TO EXCEED 8". REF: BACKFILL SPECIFICATIONS.
7. WHERE BOTT/FOOTINGS ARE BELOW THE GROUNDWATER ELEVATION, PLACE 8" OF 3/8" CRUSHED STONE UNDER FOOTINGS.

C. CONCRETE (All materials to be submitted for Review before start of work)

8. CONCRETE MATERIALS ARE AS FOLLOWS: 3000 psi at WALLS, FOOTINGS, and EXTERIOR SLABS, 3000 psi at SLAB-ON GRADE & 4000 psi COLUMNS/PIERS.
9. REINFORCEMENT: ASTM A615, Fy = 60 ksi.
10. CONCRETE WORK SHALL CONFORM TO ACI 301-03 & ACI 318-03.
11. MINIMUM COVER FOR REBAR:
    1 CONCRETE AGAINST EARTH.....3"
    2 CONCRETE EXPOSED TO WEATHER.....2"
    3 CONCRETE AT INTERIOR SLABS.....1"
12. INTERIOR FLOOR
    BASEMENT SLAB SHALL HAVE A STEEL TROWEL FINISH. PITCH TO EXTERIOR. EXTERIOR SLABS SHALL RECEIVE A COURSE BROOM FINISH. VERIFY WITH OWNER ON SLAB TREATMENT BEFORE PRECEEDING.
13. APPLY CURING COMPOUND TO SLABS IMMEDIATELY FOLLOWING TROWELING, Cure-N-Seal #830 or EQUAL.
14. GROUT & RUB ALL EXPOSED SURFACES OF FOUNDATION WALLS WITHIN 48 HOURS OF POUR.
15. SAW CUT SLAB-ON-GRADE CONTROL JOINTS AT A MAX. (8' x 8') MAX. JOINTS SHALL BE CUT 1/4" min. and WITHIN 24 HOURS OF POUR. FILL JOINTS WITH NON SHRINK GROUT.

D. STEEL (All materials to be submitted for Review before start of work)

16. MATERIALS: (All exposed steel shall be galvanizzd)
    W or HP Sections.....ASTM A992, Fy = 50 ksi.
    PLATES, ANGLES, ETC.....ASTM A36, Fy = 36 ksi.
    ANCHOR BOLTS (galv).....ASTM A307.
    EXTERIOR PIPE COLS.....ASTM A501, Fy = 36 ksi.

    STEEL PILES: TYPE SHALL BE MICRO PILES, MINI PILES OR APPROVED HELICAL ANCHORS. RATED = 20 TON CAPACITY. STEEL SHALL BE 50 KSI, OR 46 KSI
    SUBMIT MATERIAL & SPECS FOR REVIEW

E. WOOD (All materials to be submitted for Review before start of work)

17. MATERIALS: USE HEM OR DOUG FIR-LARCH, NO. 1 OR BETTER FOR ALL CONVENTIONAL FRAMING. USE LUMBER WITH LESS THAN 19 PERCENT MOISTURE CONTENT.
    Design Data – Fb = 1000 psi, E = 1500 ksi
18. MATERIALS: USE LVL OR EQUAL (micro-lam) BEAMS AS INDICATED ON DRAWINGS. FOLLOW MANUF. REQUIREMENTS FOR INSTALLATION AT EXTERIOR DECK. MIN BEARING = 3 ½"
    Design Data – Fb = 2800 psi, E = 2000 ksi
19. USE TJI (truss joist or Approved Equal) FLOOR TRUSSES AS INDICATED ON DRAWINGS. USE WEB STIFFENERS AND SOLID BLOCKING AT ALL BEARING POINTS AND AS REQUIRED PER MANUFACTURE. TJI's ARE UNSTABLE UNTIL BRACED LATERALLY, PROVIDE TEMPORARY BRACING AND SHORING BEFORE ALL FLOORING IS IN PLACE. MIN. BEARING FOR TJI's = 3 ½".
20. USE SIMPSON (or Approved Equal) STRONG TIE JOIST HANGERS AND FRAMING CONNECTORS. SUBMIT TO ENGINEER FOR REVIEW.
21. TIE RAFTERS TO WALL PLATES WITH SIMPSON HURRICANE CONNECTORS. SEE DETAILS.
22. DOUBLE UP FLOOR JOISTS NEXT TO ALL FLOOR PENETRATIONS GREATER THAN 24".
23. DO NOT CUT HOLES IN FLOOR JOISTS WITHOUT APPROVAL FROM ENGINEER OR MANUF.
24. ANY LUMBER TOUCHING CONCRETE OR EXPOSED TO WEATHER SHALL BE PRESSURE TREATED.
25. IT IS CRITICAL THAT ALL ROOF RAFTERS, RIDGE BEAMS, HEADERS AND BEARING WALLS CARRY THEIR LOADS DOWN TO THE FOUNDATION. WHENEVER A BEAM OR HEADER BEARS ON A FRAMED WALL, INSTALL A 3-2X4 COL(OR AS NOTED) IN T HE FRAMED WALL VERTICALLY UNDER THE BEARING POINT LOAD. USE SOLIB BLOCKING BETWEEN FLOORS.
28. CONTRACTOR SHALL CONFORM TO THE **"WOOD FRAME CONSTRUCTION MANUAL", 100 mph, EXPOSURE C** (WFCM), FOR ALL NAILING PATTERNS, FASTENING & CONNECTIONS. SEE DWGS FOR ADDITIONAL SHEAR WALL CONNECTIONS.

F. DESIGN CRITERIA (BRANFORD, CT)

FIRST FLOOR LIVE LOAD = 40 psf
SECOND FLOOR (Bedrooms) LIVE LOAD = 30 psf
ATTIC FLOOR LIVE LOAD = 10 psf
EXTERIOR DECK LIVE LOAD = 60 psf
ROOF LIVE LOAD = 30 psf
WIND LOAD (App K).....100 mph (3 sec)
PRESUMPTIVE SOIL BEARING PRESSURE.....PILES ON LEDGE

NOTE: The structural design was performed only for general conformance at this Site in Branford, CT., using the assumed local site conditions and general compliance with the CT State Code and based on information provided by the Architect/Owner. The Building Contractor is responsible for: existing framing sizes & dimensions, and shall be confirmed and coordinated at the job site with the Architect & Owner, information that pertains to the fabrication process, or to the means, methods, techniques, sequences, and procedures of construction. The Contractor is responsible for all work in a safe and satisfactory manner. Any discrepancies shall be brought to the attention of the Architect/Engineer/ Owner before the start of Work.

CAPITAL STUDIO
architects LLC
1379 MAIN STREET EAST HARTFORD CT. 06108
860.289.3262 fax 860.289.3163

THE STATE OF CONNECTICUT DEPARTMENT OF HOUSING (DOH) COMMUNITY DEVELOPMENT BLOCK GRANT - DISASTER RECOVERY (CDBG-DR) OWNER OCCUPIED REHABILITATION and REBUILDING PROGRAM (OORR)

REILLY RESIDENCE REHABILITATION and MITIGATION APPLICATION No. 1180
14 Waverly Park Road
Branford, CT 06405

WML WILLIAM M. LAPOINT, PE
109 Main Street
East Hartford, CT 06108
Voice 860.632.2840
www.lapointpe.com

date	description	no.

revisions
ISSUED FOR B.P. - 01/26/15

SECTIONS & NOTES

S-2.0

date	26 JAN. 2015
drawn	JB
scale	AS SHOWN
checked	WML
project no.	1347-02
application no.	1180

Copyright © 2015 Capital Studio Architects, LLC

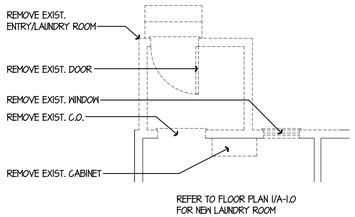

3 / A-1.0 DEMOLITION
SCALE: 1/4" = 1'-0"

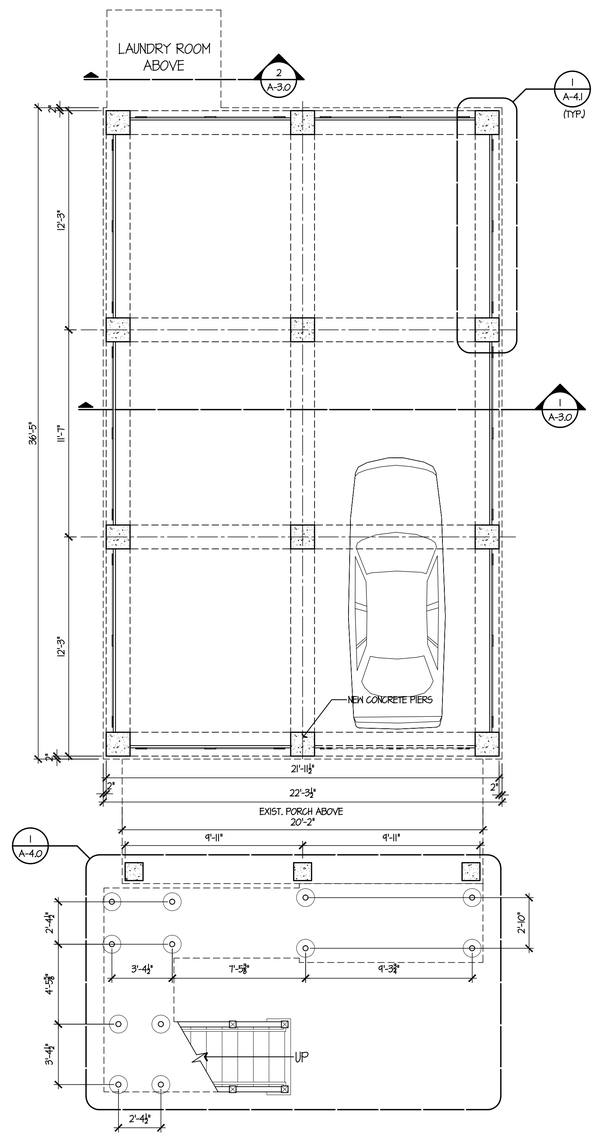

2 / A-1.0 GROUND FLOOR PLAN
SCALE: 1/4" = 1'-0"

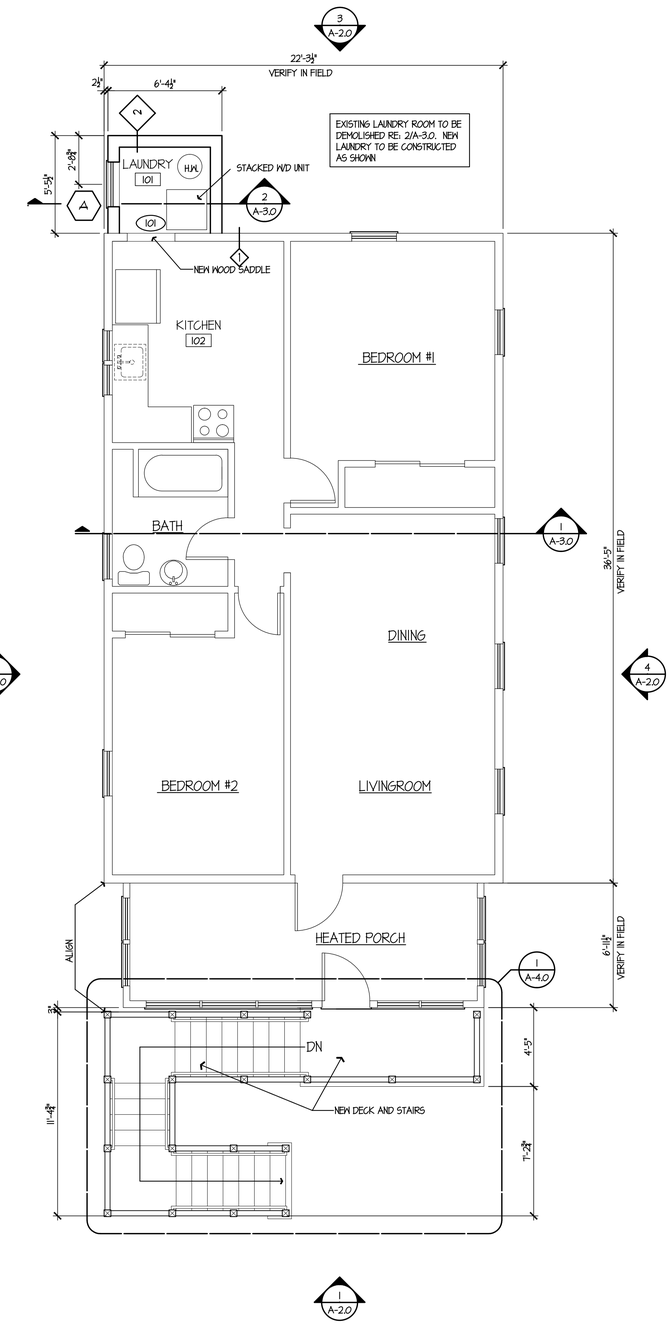

1 / A-1.0 FIRST FLOOR PLAN
SCALE: 1/4" = 1'-0"

CAPITAL STUDIO architects LLC
1379 MAIN STREET EAST HARTFORD CT. 06108
860.289.3262 fax. 860.289.3163

THE STATE OF CONNECTICUT DEPARTMENT OF HOUSING (DOH) COMMUNITY DEVELOPMENT BLOCK GRANT - DISASTER RECOVERY (CDBG-DR) OWNER OCCUPIED REHABILITATION and REBUILDING PROGRAM (OORR)

REILLY RESIDENCE REHABILITATION and MITIGATION APPLICATION No. 1180
14 Waverly Park Road
Branford, CT 06405

date	description	no.
revisions		

FLOOR PLAN

ISSUED FOR:
BIDDING and CONSTRUCTION

A-1.0

date	26 JAN 2015
drawn	BD/PM/NF
scale	AS SHOWN
checked	JP/DH
project no.	1341-02
application no.	1180

Copyright © 2015 Capital Studio Architects, LLC

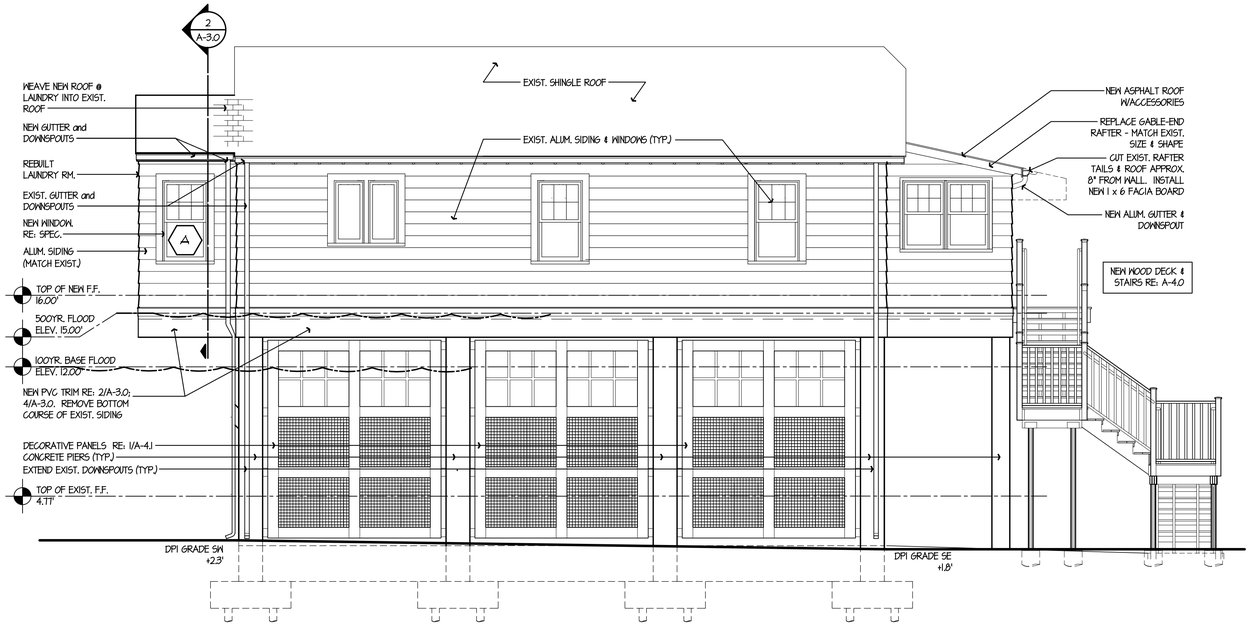

2 A-2.0 SOUTH ELEVATION

SCALE: 1/4" = 1'-0"

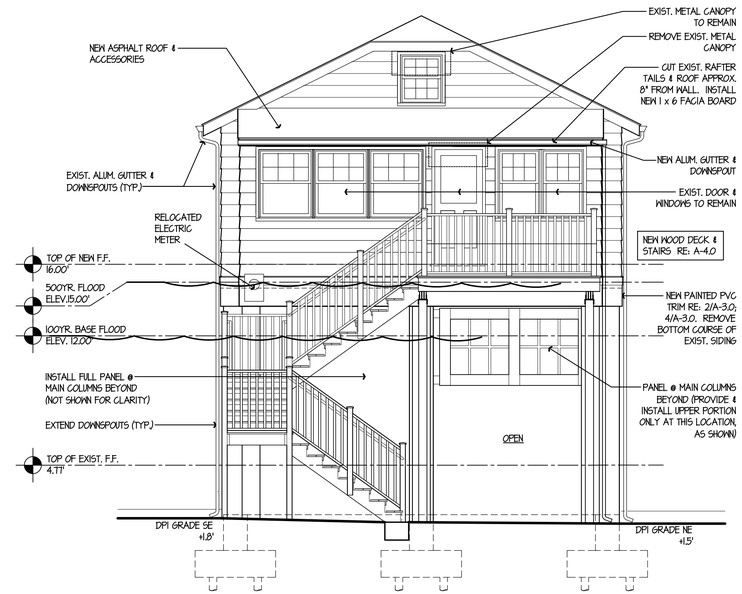

1 A-2.0 EAST ELEVATION

SCALE: 1/4" = 1'-0"

NOTE - DESIGN FLOOD ELEVATION INCLUDES 1'-0" OF FREEBOARD.

4 A-2.0 NORTH ELEVATION

SCALE: 1/4" = 1'-0"

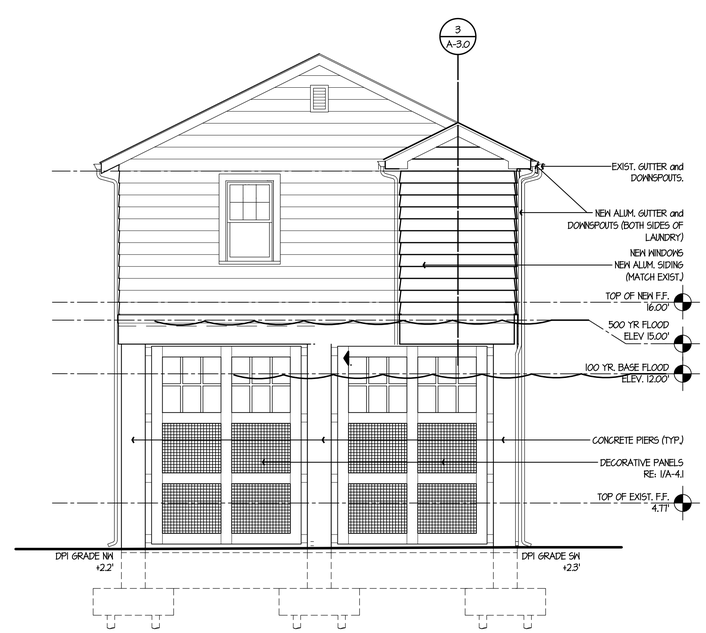

3 A-2.0 WEST ELEVATION

SCALE: 1/4" = 1'-0"

CAPITAL STUDIO architects LLC
1379 MAIN STREET 860.289.3262
EAST HARTFORD CT. 06108 fax 860.289.3163

THE STATE OF CONNECTICUT DEPARTMENT OF HOUSING (DOH) COMMUNITY DEVELOPMENT BLOCK GRANT - DISASTER RECOVERY (CDBG-DR) OWNER OCCUPIED REHABILITATION and REBUILDING PROGRAM (OORR)

REILLY RESIDENCE REHABILITATION and MITIGATION APPLICATION No. 1180
14 Waverly Park Road
Branford, CT 06405

date	description	no.

revisions

ELEVATIONS

ISSUED FOR:
BIDDING and CONSTRUCTION

A-2.0

date	26 JAN 2015
drawn	BD/PM/NF
scale	AS SHOWN
checked	JP/DH
project no.	1347-02
application no.	1180

Copyright © 2015 Capital Studio Architects, LLC

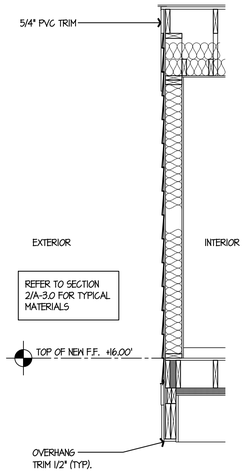

3 A-3.0 SECTION
SCALE: 1/2" = 1'-0"

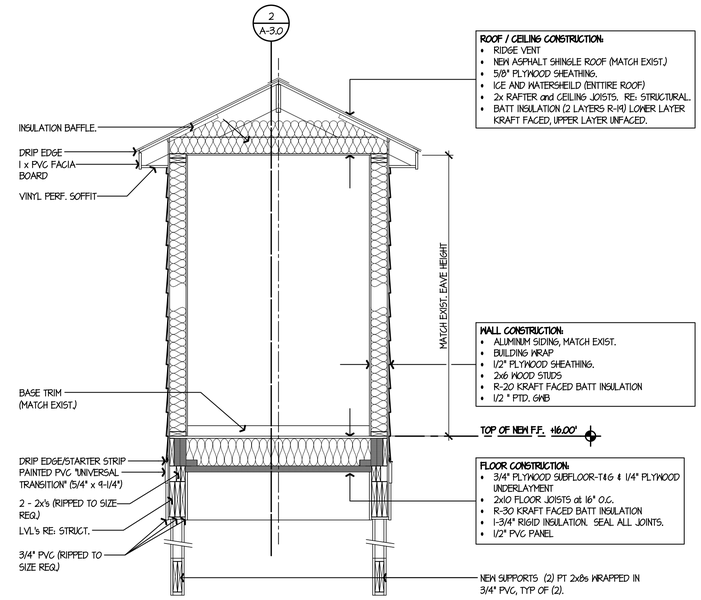

2 A-3.0 SECTION Thru LAUNDRY ROOM
SCALE: 1/2" = 1'-0"

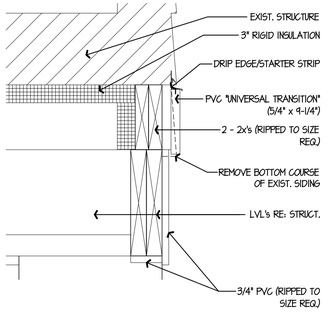

4 A-3.0 DETAIL
SCALE: 1-1/2" = 1'-0"

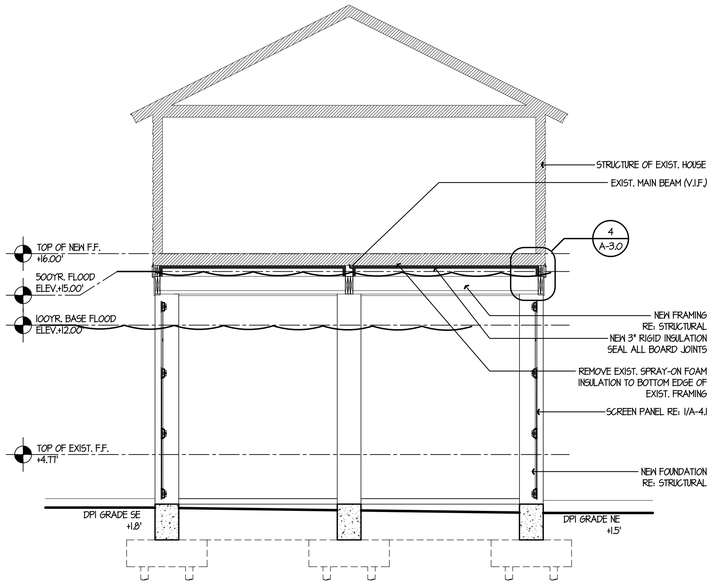

1 A-3.0 SECTION Thru HOUSE
SCALE: 1/4" = 1'-0"

CAPITAL STUDIO
architects LLC
1379 MAIN STREET EAST HARTFORD CT. 06108
860.289.3262 fax 860.289.3163

THE STATE OF CONNECTICUT DEPARTMENT OF HOUSING (DOH) COMMUNITY DEVELOPMENT BLOCK GRANT - DISASTER RECOVERY (CDBG-DR) OWNER OCCUPIED REHABILITATION and REBUILDING PROGRAM (OORR)

REILLY RESIDENCE REHABILITATION and MITIGATION APPLICATION No. 1180
14 Waverly Park Road
Branford, CT 06405

date	description	no.

revisions

SECTIONS & DETAILS

ISSUED FOR:
BIDDING and CONSTRUCTION

A-3.0

date	26 JAN 2015
drawn	BD/PM/NF
scale	AS SHOWN
checked	JP/DH
project no.	1347-02
application no.	1180

Copyright © 2015 Capital Studio Architects, LLC

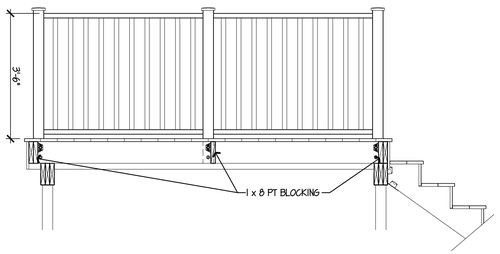

6 A-4.0 DECK & STAIR SECTION
SCALE: 1/2" = 1'-0"

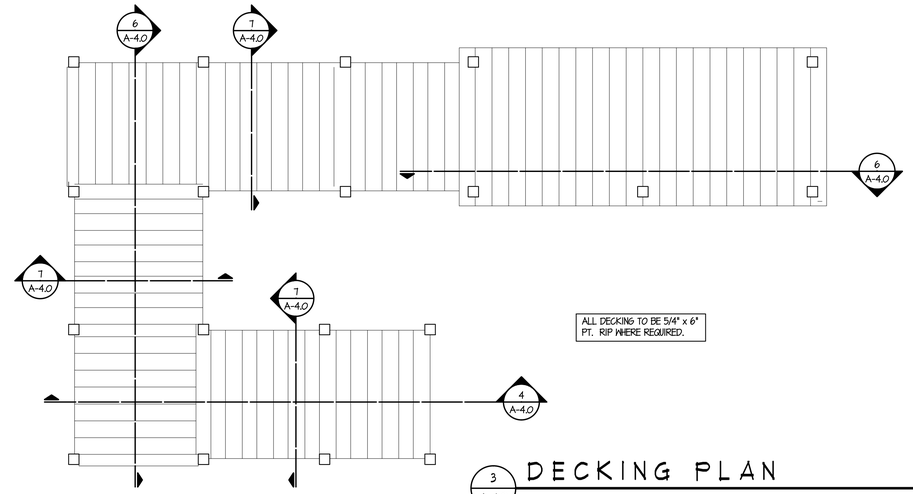

3 A-4.0 DECKING PLAN
SCALE: 1/2" = 1'-0"

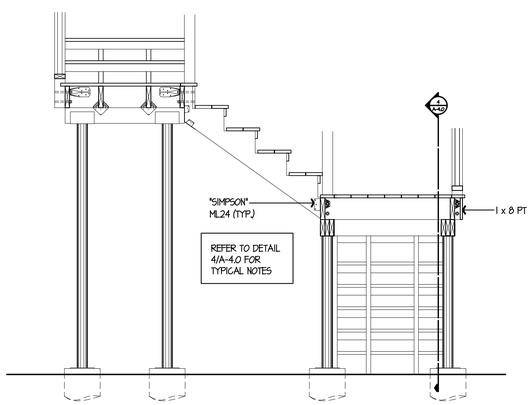

5 A-4.0 STAIR SECTION
SCALE: 1/2" = 1'-0"

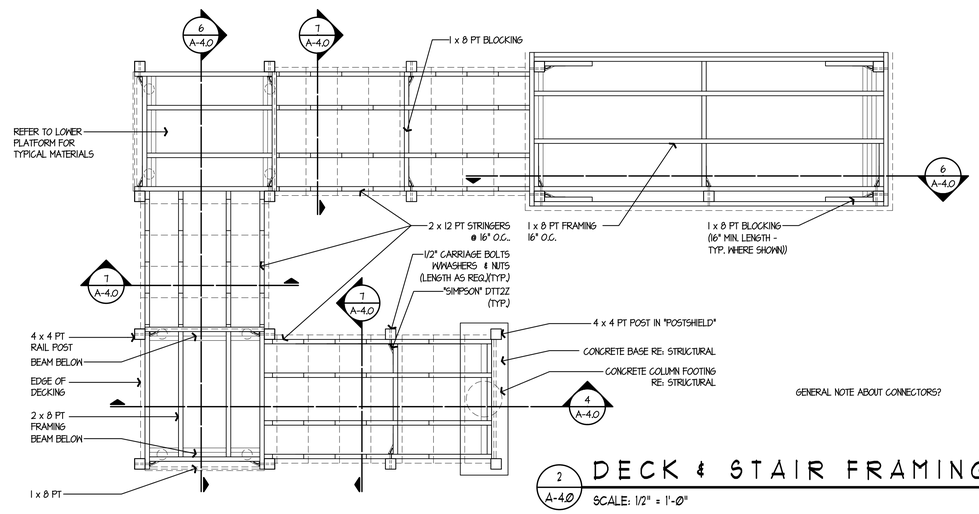

2 A-4.0 DECK & STAIR FRAMING
SCALE: 1/2" = 1'-0"

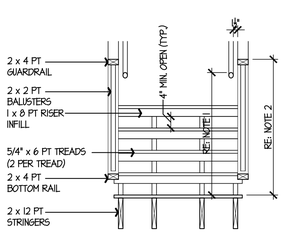

NOTE 1 - HANDRAIL MIN. HEIGHT 34" - MAX HEIGHT 38"
NOTE 2 - GUARDRAIL MIN. HEIGHT 36"

HANDRAIL TO BE LOCATED MIN. 1-1/2" BELOW GUARDRAIL

7 A-4.0 STAIR SECTION
SCALE: 1/2" = 1'-0"

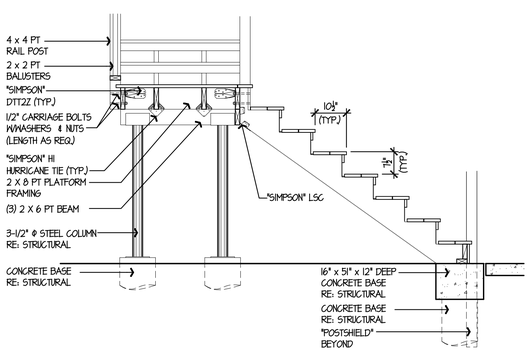

4 A-4.0 STAIR SECTION
SCALE: 1/2" = 1'-0"

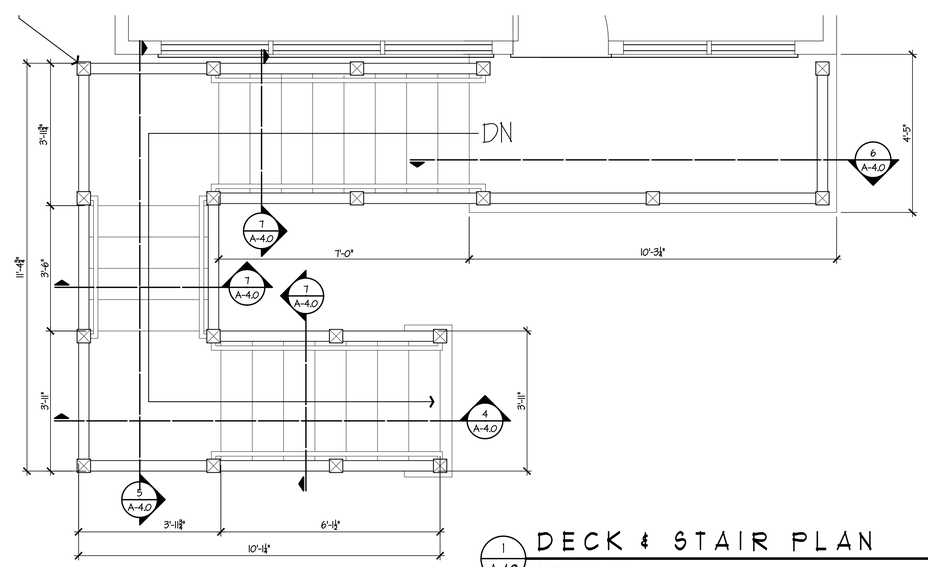

1 A-4.0 DECK & STAIR PLAN
SCALE: 1/2" = 1'-0"

CAPITAL STUDIO
architects LLC
1379 MAIN STREET EAST HARTFORD CT. 06108
860.289.3262 fax 860.289.3163

THE STATE OF CONNECTICUT DEPARTMENT OF HOUSING (DOH) COMMUNITY DEVELOPMENT BLOCK GRANT - DISASTER RECOVERY (CDBG-DR) OWNER OCCUPIED REHABILITATION and REBUILDING PROGRAM (OORR)

REILLY RESIDENCE REHABILITATION and MITIGATION APPLICATION No. 1180
14 Waverly Park Road
Branford, CT 06405

date	description	no.

revisions

STAIR DETAILS

ISSUED FOR:
BIDDING and CONSTRUCTION

A-4.0

date	26 JAN 2015
drawn	BD/PM/NF
scale	AS SHOWN
checked	JP/DH
project no.	1341-02
application no.	1180

Copyright © 2015 Capital Studio Architects, LLC

DOOR SCHEDULE

LABEL	TYPE	STYLE	SIZE (W x H)	NOTES
101	CASED OPENING	NA	3'-0" x **"	**MATCH HEAD HEIGHT OF EXIST. OPENINGS TRIM TO MATCH EXIST.

FINISH SCHEDULE

ROOM NAME	No.	FLOOR		WALLS	CEILING	CLG. HT.	REMARKS
		FLOORING	BASE				
LAUNDRY	101	VINYL	WOOD (MATCH EXIST.)	PAINT	GWB- PTD.	(MATCH EXIST.)	MATCH EXIST. MATERIALS & FINISHES
KITCHEN	102	EXISTING	WOOD (MATCH EXIST.)	PAINT	GWB- PTD.	EXIST.	MATCH EXIST. MATERIALS & FINISHES

WINDOW SCHEDULE

DESIGNATION	SIZE DESIGNATION	MODEL #	MANUFACTURER	REMARKS
A	TW20210	SERIES 400	ANDERSEN	WITH "STORMWATCH" PROTECTION

2 / A-4.1 SCHEDULES

NO SCALE

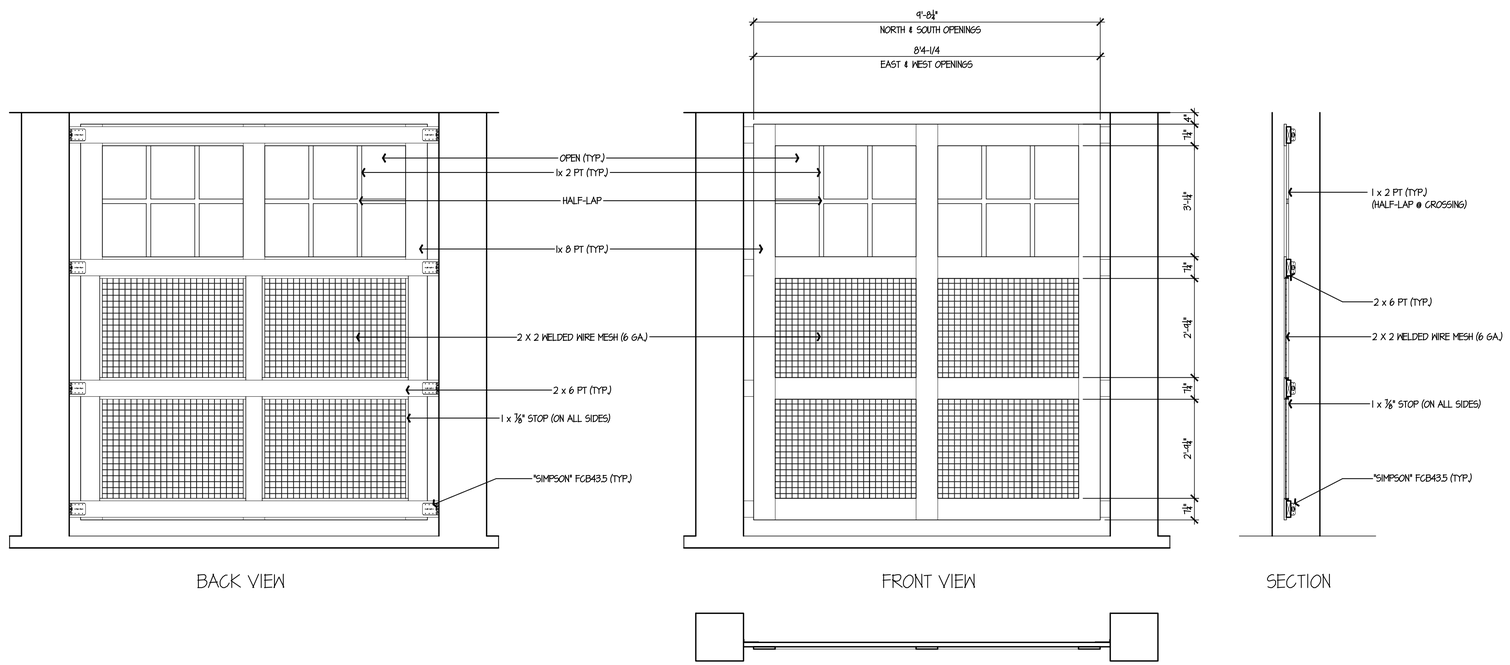

1 / A-4.1 SCREENS @ GROUND FLOOR

SCALE: 1/2" = 1'-0"

CAPITAL STUDIO
architects LLC
1379 MAIN STREET EAST HARTFORD CT. 06108
860.289.3262 fax 860.289.3163

THE STATE OF CONNECTICUT DEPARTMENT OF HOUSING (DOH) COMMUNITY DEVELOPMENT BLOCK GRANT - DISASTER RECOVERY (CDBG-DR) OWNER OCCUPIED REHABILITATION and REBUILDING PROGRAM (OORR)

REILLY RESIDENCE REHABILITATION and MITIGATION APPLICATION No. 1180
14 Waverly Park Road
Branford, CT 06405

date	description	no.

revisions

DETAILS & SCHEDULES

ISSUED FOR:
BIDDING and CONSTRUCTION

A-4.1

date	26 JAN 2015
drawn	BD/PM/NF
scale	AS SHOWN
checked	JP/DH
project no.	1341-02
application no.	1180

Copyright © 2014 Capital Studio Architects, LLC

GENERAL NOTES ALL TRADES

1. ELECTRICAL AND PLUMBING ITEMS INCLUDING BUT NOT LIMITED TO PIPING, WIRING, EQUIPMENT, SWITCHES, OUTLETS, ETC SHALL BE INSTALLED ABOVE THE FLOOD PLANE AS DETERMINED BY THE ARCHITECTURAL PLANS.
2. WORK SHALL BE COORDINATED WITH ARCHITECTURAL PLANS INCLUDING ACCESS PANELS FOR VALVES AND EQUIPMENT, DIFFUSER LOCATIONS, THERMOSTAT AND SENSOR LOCATIONS, ETC.
3. CONTRACTOR SHALL FIELD VERIFY ACTUAL CONDITIONS PRIOR TO PROVIDING ALL EQUIPMENT AND PIPING.
4. CIRCUITS SHALL BE #12 FOR 20A-1P CIRCUIT BREAKERS AND #14 FOR 15A-1P CIRCUIT BREAKERS IN PANEL INDICATED UNLESS OTHERWISE NOTED.

PLUMBING KEY NOTES

- (P1) REMOVE WATER METER AND ALL ASSOCIATED PIPING BACK TO STREET. REMOVE PIPING AFTER METER AS INDICATED.
- (P2) REMOVE GAS METER AND ALL ASSOCIATED PIPING BACK TO STREET. REMOVE PIPING AFTER METER AS INDICATED.
- (P3) REMOVE EXISTING COLD WATER, HOT WATER, WASTE, AND VENT PIPING SERVING CLOTHES WASHER AS INDICATED ON FLOOR PLANS.
- (P4) REMOVE WATER HEATER AND ASSOCIATED PIPING. REMOVE PIPING BACK INTO HOUSE AS INDICATED ON FLOOR PLANS
- (P5) PROVIDE NEW WATER METER NEAR PROPERTY LINE ON STREET. METER SHALL BE INSTALLED IN METER PIT. VERIFY ALL INSTALLATION LOCATIONS AND PIT REQUIREMENTS WITH UTILITY COMPANY PRIOR TO BIDDING AND INSTALLATION.
- (P6) PROVIDE NEW GAS METER. COORDINATE EXACT LOCATION WITH UTILITY PRIOR TO BIDDING AND INSTALLATION. CONNECT NEW PIPING TO EXISTING PIPING AS INDICATED ON FLOOR PLANS.
- (P7) PROVIDE NEW WATER HEATER. REFER TO SCHEDULES FOR MORE DETAILS. CONNECT NEW PIPING AS INDICATED ON FLOOR PLANS AND DETAILS.
- (P8) PROVIDE SANITARY WASTE PIPING AS REQUIRED FOR RAISING OF HOUSE. CONTRACTOR TO FIELD VERIFY PIPING LOCATION AND SIZE PRIOR TO BIDDING AND INSTALLATION .
- (P9) ALL NEW AND EXISTING DOMESTIC COLD WATER SUPPLY PIPING EXPOSED BELOW THE PROPERTY SHALL BE INSULATED WITH 1/2" FIBERGLASS INSULATION WITH CONTINUOUS PVC JACKETING. ALL HOT AND COLD WATER PIPING EXPOSED BELOW THE PROPERTY SHALL BE HEAT TRACED WITH SELF REGULATION HEAT TRACE CABLE MODEL H612 AS MANUFACTURED BY PENTAIR. CABLE SHALL BE 120V INPUT AND HAVE AN OUTPUT OF 6W PER FOOT. PROVIDE ONE HEAT TAPE FOR HOT WATER PIPING AND ONE HEAT TAPE FOR COLD WATER PIPING. PROVIDE ALL NECESSARY ACCESSORIES NEEDED FOR COMPLETE AND OPERATIONAL SYSTEM. PROVIDE ONE 20A/120V DEDICATED POWER CIRCUIT FOR EVERY 150 FEET OF HEAT TRACE CABLE.
- (P10) PROVIDE NEW EXTERIOR WALL HYDRANT 3' ABOVE FINAL FINISHED GRADE. PROVIDE LOW POINT DRAIN ON PIPING DROP FROM HOUSE. HOSE BIB SHALL BE ANTISIPHON, BRASS, WITH ¾" THREADED OUTLET AS MANUFACTURED BY WOODFORD OR APPROVED EQUAL.
- (P11) PROVIDE 4" DRYER EXHAUST DUCT. DUCT SHALL BE ALUMINUM RIDGED FLEXIBLE DUCTWORK. TERMINATE THROUGH WALL WITH DRYER EXHAUST CAP.
- (P12) CONNECT NEW SANITARY TO EXISTING PIPE IN KITCHEN. CONTRACTOR TO FIELD VERIFY EXACT PIPING LOCATION.
- (P13) PROVIDE WATER-TITE MODEL #W2700 HA WASHING MACHINE OUTLET BOX..
- (P14) PROVIDE ISOLATION VALVE ON DROP ABOVE FLOOD PLANE.

ELECTRICAL KEY NOTES

- (E1) DISCONNECT AND REMOVE ALL EXISTING BRANCH CIRCUIT WIRING ASSOCIATED WITH EXISTING GAS FIRED WATER HEATER TO BE RELOCATED.
- (E2) PROVIDE 120VAC/20AMP GFCI RECEPTACLE FOR GAS FIRED WATER HEATER. PROVIDE 12-2 WIRING BACK TO NEW 20A/1P CIRCUIT BREAKER IN PANEL 'EP-1'
- (E3) PROVIDE NEW ELECTRIC SERVICE TO THE RESIDENCE. PROVIDE NEW WEATHER HEAD, WIRING (FROM WEATHER HEAD TO METER), METER, METER SOCKET, NEW FEEDER TO PANEL 'EP-1' AND CONNECTION TO PANEL 'EP-1'. REFER TO DISTRIBUTION RISER DIAGRAM FOR MORE INFORMATION. EC SHALL COORDINATE WITH THE UTILITY COMPANY ALL WORK, ROUTING AND PARTS ASSOCIATED WITH PROVIDING A NEW SERVICE.
- (E4) DISCONNECT AND REMOVE EXISTING WASHER/DRYER RECEPTACLE AND WIRING BACK TO SOURCE PANEL 'EP'.
- (E5) PROVIDE (2) DUPLEX GFCI 120VAC/20AMP RECEPTACLE AT WASHER AND DRYER LOCATION AS PER THE DWGS. PROVIDE 12-2 WIRING TO C/B IN PANEL 'EP-1'. REFER TO PANEL BOARD SCHEDULE FOR CIRCUIT DESIGNATION AND MORE INFORMATION.
- (E6) NEW TELEPHONE SERVICE SHALL BE PROVIDED. CONNECT TO EXISTING TELEPHONE DISTRIBUTION EQUIPMENT AND CABLING. COORDINATE WITH THE TELEPHONE COMPANY ALL WORK AND PARTS ASSOCIATED WITH PROVIDING A NEW SERVICE.
- (E7) DISCONNECT AND REMOVE EXISTING PANEL 'EP', WIRING, FEEDERS, AND EQUIPMENT ASSOCIATED WITH CURRENT ELECTRICAL SERVICE. REFER TO KEYNOTE 'E3' FOR MORE INFORMATION.
- (E8) NEW CATV SERVICE SHALL BE PROVIDED. CONNECT TO EXISTING CATV DISTRIBUTION EQUIPMENT AND CABLING. COORDINATE WITH THE CATV COMPANY ALL WORK AND PARTS ASSOCIATED WITH PROVIDING A NEW SERVICE.
- (E9) PROVIDE NEW SPLICE/JUNCTION BOX FLUSH IN WALL FOR EXTENSION OF BRANCH CIRCUITS TO NEW PANEL IN NEW LOCATION.
- (E10) RUN CIRCUITS BEING EXTENDED IN PVC RACEWAY IN STRUCTURE BELOW FLOOR.
- (E11) PROVIDE NEW PANEL 'EP-1' 125A/MCB, 2P, 120/240V, 3-WIRE.
- (E12) PROVIDE 12-2 WIRING AND JUNCTION BOX TO THIS LOCATION. WIRING AND JUNCTION BOX SHALL BE PROTECTED FOR FUTURE USE AND INSTALLATION OF LIGHTING FIXTURE. OWNER SHALL PROVIDE LIGHTING FIXTURE BASED ON ALLOWANCE PROVIDED UNDER THIS PROJECT. REFER TO PANELBOARD SCHEDULE FOR CKT INFORMATION. REFER TO DWGS FOR WIRING INFORMATION.

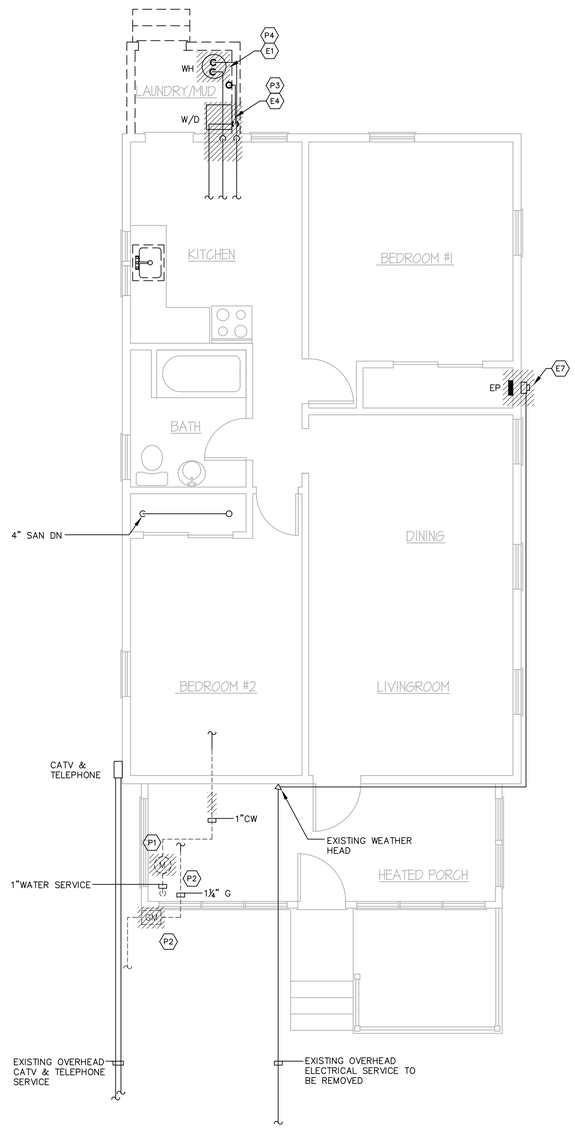

1 DEMOLITION FLOOR PLAN

SCALE: 1/4" = 1'-0"

NORTH

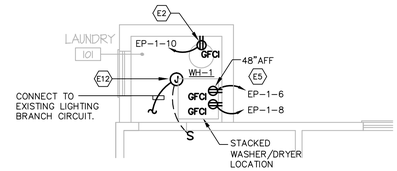

2 ELECTRICAL LAUNDRY ROOM PART PLAN

SCALE: 1/4" = 1'-0"

NORTH

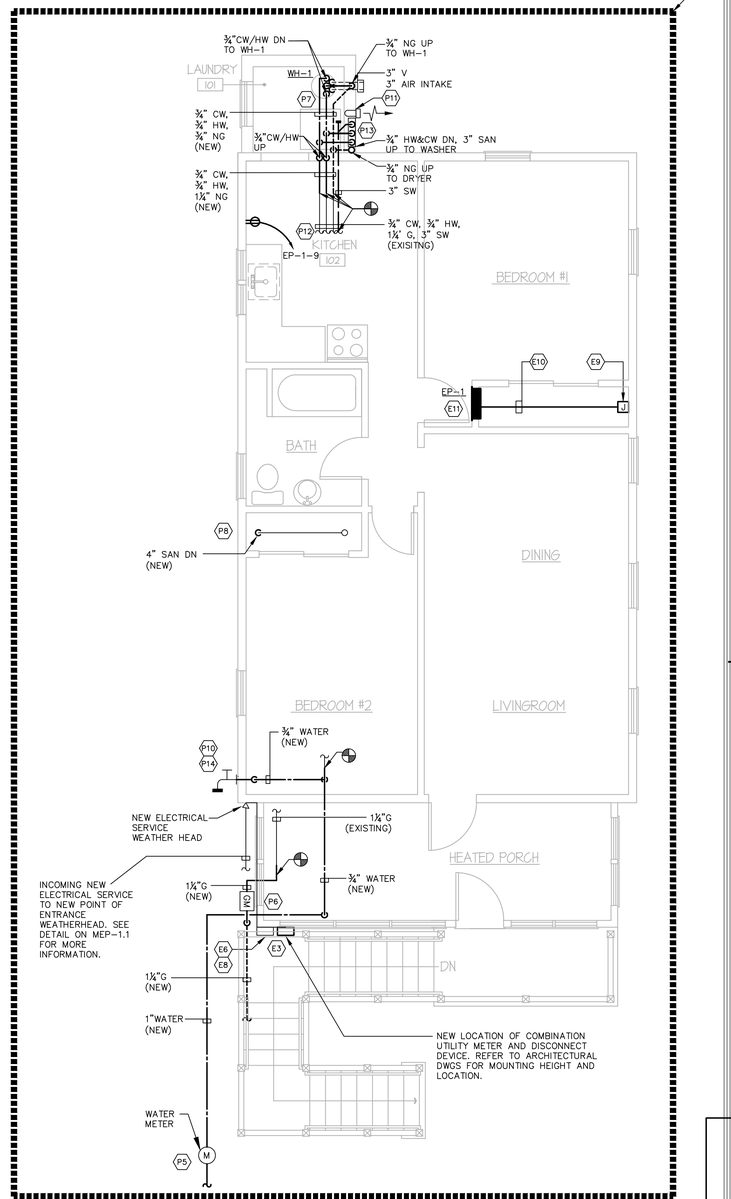

3 NEW WORK FLOOR PLAN

SCALE: 1/4" = 1'-0"

NORTH

CAPITAL STUDIO architects LLC
1379 MAIN STREET EAST HARTFORD CT. 06108
860.289.3262 fax 860.289.3163

THE STATE OF CONNECTICUT DEPARTMENT OF HOUSING (DOH) COMMUNITY DEVELOPMENT BLOCK GRANT - DISASTER RECOVERY (CDBG-DR) DOH OCCUPIED REHABILITATION and REBUILDING PROGRAM (OORR)

REILLY RESIDENCE REHABILITATION and MITIGATION APPLICATION No. 1180
14 Waverly Park Road
Branford, CT 06405

CES Consulting Engineering Services, Inc.
151 Middle Street
Middletown, CT 06457
Tel. (860) 632-1652
Fax. (860) 632-1768
CES #2014064.00

date	description	no.

revisions

MEP-1.0

date	JANUARY 26, 2015
drawn	ANK/VCM
scale	AS SHOWN
checked	DTB
project no.	1347-02
application no.	1180

Copyright © 2014 Capital Studio Architects, LLC

PLUMBING SYMBOL LEGEND

SYMBOL	DESCRIPTION
	BALL VALVE
M	WATER METER
GM	GAS METER
	CONNECT NEW TO EXISTING

PLUMBING PIPING LEGEND

SYMBOL	DESCRIPTION
	COLD WATER
	HOT WATER (110°F)
	SANITARY WASTE ABOVE FLOOR
	SANITARY WASTE BURIED
FM	FORCE MAIN ABOVE FLOOR
FM	FORCE MAIN BURIED
ST	STORM ABOVE FLOOR (PRIMARY)
ST	STORM BURIED (PRIMARY)
SST	STORM ABOVE FLOOR (SECONDARY)
G	NATURAL GAS ABOVE FLOOR
G	NATURAL GAS BURIED
	90° ELBOW DOWN
	90° ELBOW UP
	TEE UP
	TEE DOWN
	DROP AND RUN
	TEE OFF TOP OF PIPE
	TEE OFF BOTTOM OF PIPE
	END CAP
	CLEANOUT
	WALL HYDRANT

WATER HEATER SCHEDULE-GAS FIRED

SYMBOL	MANUFACTURER/ MODEL NUMBER	TYPE	LOCATION	FUEL TYPE	BTUH INPUT	STORAGE CAPACITY GALLONS	RECOVERY IN GPH AT 90°F RISE	HW STORAGE TEMP.	ELEC DATA HP-VOLTS-PH	REMARKS
WH-1	LOCHINVAR/PRN040	S	LAUNDRY	NATURAL GAS	40,000	40	70	140	120V-1ø	ALL

NOTES:
S = STORAGE TYPE HEATER.
I = INSTANTANEOUS TYPE HEATER

REMARKS:
1. REFER TO DETAIL FOR PIPING ARRANGEMENT.
2. PROVIDE PVC INTAKE AND VENT. INSTALL INTAKE A ND VENTING PER INSTALLATION INSTRUCTION.

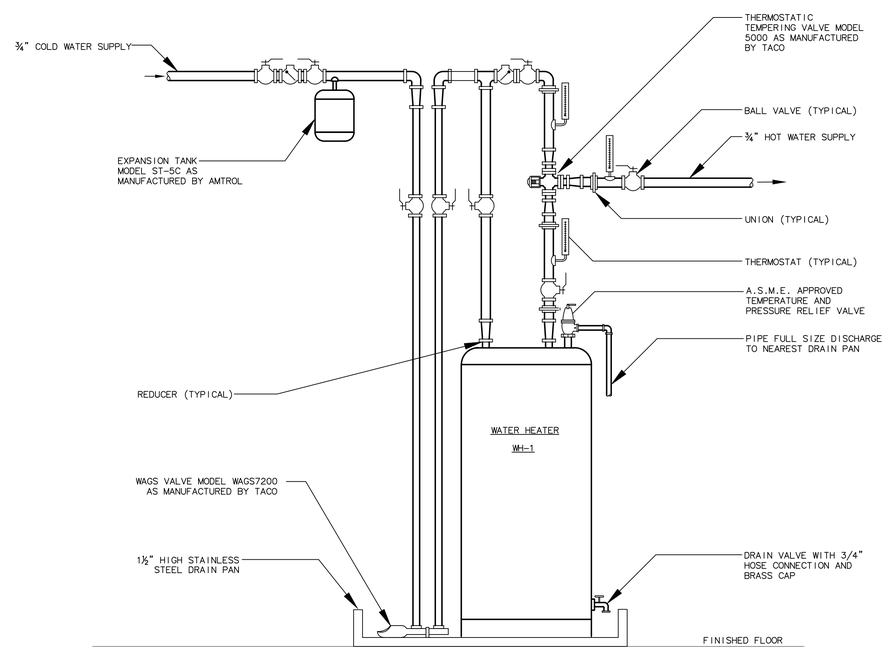

WATER HEATER PIPING DIAGRAM
N.T.S.

CAPITAL STUDIO
architects LLC
1379 MAIN STREET 860.289.3262
EAST HARTFORD CT. 06108 fax 860.289.3163

THE STATE OF CONNECTICUT DEPARTMENT OF HOUSING (DOH) COMMUNITY DEVELOPMENT BLOCK GRANT - DISASTER RECOVERY (CDBG-DR) DOH OCCUPIED REHABILITATION and REBUILDING PROGRAM (OORR)

REILLY RESIDENCE REHABILITATION and MITIGATION APPLICATION No. 1180
14 Waverly Park Road
Branford, CT 06405

CES
Consulting Engineering Services, Inc.
811 Middle Street
Middletown, CT 06457
Tel. (860) 632-1682
Fax. (860) 632-1758
CES #2014064.00

date	description	no.

revisions

MEP-5.0

date	JANUARY 26, 2015
drawn	ANK/VCM
scale	AS SHOWN
checked	DTB
project no.	1347-02
application no.	1180

Copyright © 2014 Capital Studio Architects, LLC

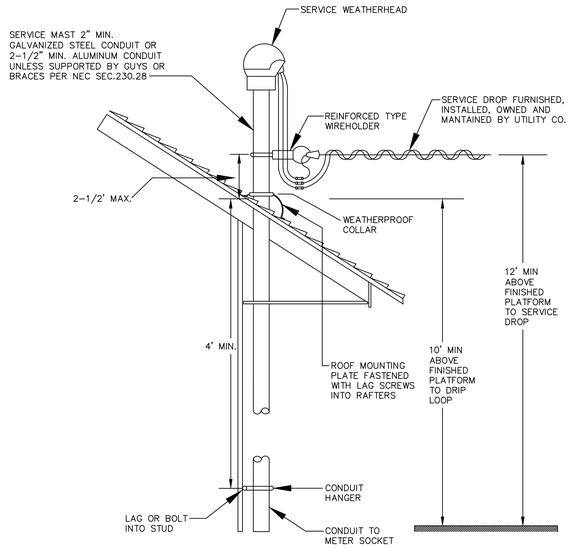

TYPICAL ELECTRICAL SERVICE MAST DETAIL

N.T.S.

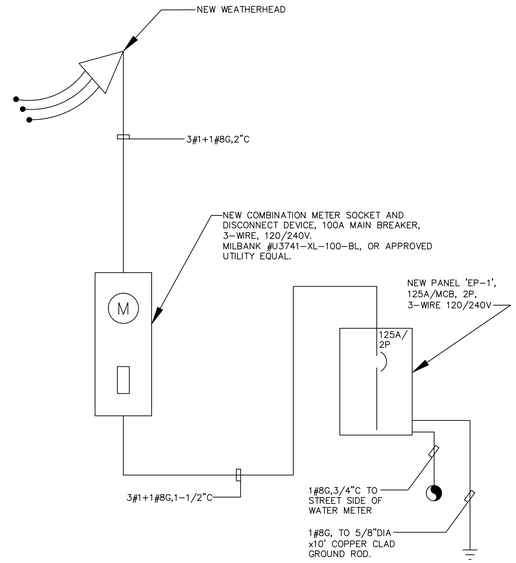

SERVICE ENTRANCE / DISTRIBUTION RISER DIAGRAM

N.T.S.

PANELBOARD SCHEDULE

PANELBOARD	LOCATION	MAIN	VOLTAGE	PHASE	WIRE	FEEDER	SE RATED	MOUNTING	MIN SCR	REMARKS
EP-1	BEDROOM#1	125A/2P MCB	120/240	1	3	3#1+1#8G,1-1/2"C	N/A	RECESSED	14,000	

CKT	DESCRIPTION	P	AT	AF	CIRCUITRY	KVA	CKT	DESCRIPTION	P	AT	AF	CIRCUITRY	KVA
1	SEE REMARK #8&9	1	*	*	12-2	1.4	2	SEE REMARK #8&9	1	*	*	12-2	1.5
3	SEE REMARK #8&9	1	*	*	12-2	1.4	4	SEE REMARK #8&9	1	*	*	12-2	1.5
5	RANGE	2	50	50	6-3	8.0	6	WASHER RCPT	1	20	20	12-2	1.5
7	–	–	–	–	–	–	8	DRYER RCPT	1	20	20	12-2	1.5
9	FRIDGE	1	20	20	12-2	1.5	10	WH-1	1	20	20	12-2	1.2
11	SPARE	1	20	20	–	–	12	SPARE	1	20	20	–	–
13	SPARE	1	20	20	–	–	14	SPARE	1	20	20	–	–
15	SPACE IN BUS	–	–	–	–	–	16	SPACE IN BUS	–	–	–	–	–
					SUBTOTAL KVA	12.3						SUBTOTAL KVA	7.2
												TOTAL KVA	19.5

* CONTRACTOR SHALL FIELD VERIFY THE WIRING SIZE OF EXISTING CIRCUITS AND PROVIDE APPROPRIATELY SIZED AFCI CIRCUIT BREAKERS.

PANELBOARD REMARKS:

1. PROVIDE WITH EQUIPMENT GROUND BUS.
2. PROVIDE WITH 100% RATED NEUTRAL BUS.
3. BRANCH CIRCUIT BREAKERS SHALL BE BOLT-ON TYPE.
4. PROVIDE WITH HINGED DOOR WITH[IN DOOR TRIM.
5. PROVIDE A TYPED WRITTEN PANELBOARD DIRECTORY AND A DIRECTORY HOLDER ON THE INSIDE COVER OF DOOR.
6. PROVIDE WITH COPPER BUS.
7. THE CONTRACTOR SHALL BE RESPONSIBLE FOR ALL TYPES AND QUANTITIES OF CIRCUIT BREAKERS INDICATED ON THE DRAWINGS.
8. CIRCUITS UNDER THIS NOTE ARE EXISTING AND SHALL BE EXTENDED AND RECONNECTED TO THE NEW LOCATION OF PANEL 'EP-1'. SEE PANEL BOARD SCHEDULE FOR FEEDER INFORMATION. ALL CIRCUIT BREAKERS SPECIFIED UNDER THIS NOTE SHALL BE OF AFCI TYPE.
9. CIRCUIT BREAKERS SHALL BE OF AFCI TYPE.

ELECTRICAL ABBREVIATIONS

A/AMP	AMPERE	NEC	NATIONAL ELECTRIC CODE
AC	ALTERNATING CURRENT	NIC	NOT IN CONTRACT
ACU	AIR CONDITIONING UNIT	NL	NEW LOCATION OF EXISTING RELOCATED
AFF	ABOVE FINISHED FLOOR	NR	NEW TO REPLACE EXISTING
AFG	ABOVE FINISHED GRADE	NTS	NOT TO SCALE
AWG	AMERICAN WIRE GAUGE	P	POLE
BSMT	BASEMENT	PE	PRIMARY ELECTRICAL SERVICE
C	CONDUIT	PF	POWER FACTOR
CATV	CABLE TELEVISION	PH/ø	PHASE
C/B	CIRCUIT BREAKER	PNL	PANEL
CKT	CIRCUIT	PVC	POLYVINYL CHLORIDE CONDUIT
°	DEGREE	RE	REMOVE EXISTING
DIA/ø	DIAMETER	RGS	RIGID GALVANIZED STEEL CONDUIT
DN	DOWN	RL	RELOCATE EXISTING
DWG	DRAWING	RM	ROOM
ETR	EXISTING TO REMAIN	RR	REMOVE AND REPLACE ON NEW SURFACE
ELEC	ELECTRICAL	SPEC	SPECIFICATION
EWH	ELECTRIC WATER HEATER	SWBD	SWITCHBOARD
GFCI	GROUND FAULT INTERRUPTER	TELE	TELECOMMUNICATIONS/TELEPHONE
JB	JUNCTION BOX	TV	TELEVISION
KVA	KILOVOLT AMPERE	T/TX	TRANSFORMER
KW	KILOWATT	TYP	TYPICAL
MAX	MAXIMUM	V	VOLTS
MCCB	MOLDED CASE CIRCUIT BREAKER	VA	VOLT AMPERE
MIN	MINIMUM	VAC	VOLTS ALTERNATING CURRENT
MLO	MAIN LUGS ONLY	W	WATT, WIRE
NA	NOT APPLICABLE	WP	WEATHERPROOF

ELECTRICAL SYMBOL LIST

SYMBOL	DESCRIPTION
	SURFACE MOUNTED PANELBOARD
	RECESSED PANELBOARD
	ELECTRICAL MOTOR
	ELECTRICAL METER
	BRANCH CIRCUIT WIRING, CONCEALED IN WALLS OR CEILINGS
	HOMERUN TO PANELBOARD, UNLESS INDICATED OTHERWISE SHALL BE CONNECTED TO A 1 POLE, 20 AMP CIRCUIT BREAKER
	BRANCH CIRCUIT WIRING, SWITCHED
J , J	JUNCTION BOX
	SPECIAL PURPOSE RECEPTACLE, NEMA CONFIGURATION AS INDICATED
S_2	TWO POLE MOTOR RATED TOGGLE SWITCH
S_E	EMERGENCY POWER OFF (EPO) TOGGLE SWITCH
	ROUND CEILING MOUNTED LIGHTING FIXTURE
S	SINGLE POLE SWITCH
GFCI	GFCI DUPLEX RECEPTACLE

CAPITAL STUDIO
architects LLC
1379 MAIN STREET 860.289.3262
EAST HARTFORD CT. 06108 fax 860.289.3163

THE STATE OF CONNECTICUT DEPARTMENT OF HOUSING (DOH) COMMUNITY DEVELOPMENT BLOCK GRANT - DISASTER RECOVERY (CDBG-DR) DOH OCCUPIED REHABILITATION and REBUILDING PROGRAM (OORR)

REILLY RESIDENCE REHABILITATION and MITIGATION
APPLICATION No. 1180
14 Waverly Park Road
Branford, CT 06405

CES
Consulting Engineering Services, Inc.
511 Middle Street
Middletown, CT 06457
Tel. (860) 632-1682
Fax. (860) 632-1768
CES #2014064.00

date	description	no.

revisions

MEP-5.1

date	JANUARY 26, 2015
drawn	ANK/VCM
scale	AS SHOWN
checked	DTB
project no.	1347-02
application no.	1180

Copyright © 2014 Capital Studio Architects, LLC

GENERAL PROCEDURES ALL TRADES

1. THESE SPECIFICATIONS ARE APPLICABLE TO ALL PLUMBING, MECHANICAL AND ELECTRICAL DRAWINGS UNLESS NOTED OTHERWISE.

2. DESCRIPTION

   A. THIS PROJECT COMPRISES ALTERATIONS AND RENOVATIONS TO THE EXISTING BUILDING. THE EXISTING BUILDING IS CURRENTLY OCCUPIED AND THE PROJECT WILL PROCEED IN A MANNER WHICH WILL MINIMIZE ANY INCONVENIENCE TO THE BUILDING OCCUPANTS.

   B. SCOPE OF WORK CONSISTS OF INSTALLATION OF MATERIALS TO BE FURNISHED UNDER THE CONTRACT DOCUMENTS AND WITHOUT LIMITING GENERALITY THEREOF CONSISTS OF FURNISHING LABOR, MATERIALS, EQUIPMENT, HOISTING, PLANT, TRANSPORTATION, RIGGING, STAGING, APPURTENANCES, AND SERVICES NECESSARY AND/OR INCIDENTAL TO PROPERLY COMPLETE ALL WORK AS SHOWN ON THE DRAWINGS AND AS DESCRIBED HEREIN.

3. DEFINITIONS: THE FOLLOWING DEFINITIONS APPLY TO THIS CONTRACT

   A. FURNISH: THE TERM "FURNISH" MEANS TO "SUPPLY AND DELIVER TO THE PROJECT SITE, READY FOR UNLOADING, UNPACKING, ASSEMBLY, INSTALLATION, AND SIMILAR OPERATIONS."

   B. INSTALL: THE TERM "INSTALL" IS USED TO DESCRIBE OPERATIONS AT PROJECT SITE INCLUDING THE ACTUAL "UNLOADING, UNPACKING, ASSEMBLY, ERECTION, PLACING, ANCHORING, APPLYING, WORKING TO DIMENSION, FINISHING, CURING, PROTECTING, CLEANING, AND SIMILAR OPERATIONS."

   C. PROVIDE: THE TERM "PROVIDE" MEANS "TO FURNISH AND INSTALL, COMPLETE AND READY FOR THE INTENDED USE."

   D. REMOVE: THE TERM REMOVE MEANS TO DISCONNECTFROM ITS PRESENT POSITION, REMOVE FROM THE PREMISES AND TO DISPOSE OF IN A LEGAL MANNER.'

   E. SUBSTITUTIONS: 'SUBSTITUTIONS' ARE REQUESTS FOR CHANGES IN PRODUCTS, MATERIALS AND METHODS OF CONSTRUCTION AS PROPOSED BY THE CONTRACTOR AFTER AWARD OF THE CONTRACT.

4. DRAWINGS

   A. PROVIDE ALL MATERIALS, EQUIPMENT AND LABOR NECESSARY TO COMPLETE THE WORK OUTLINED ON THESE CONTRACT DOCUMENTS. THE CONTRACTOR IS TO NOTE THAT THESE DOCUMENTS ARE DIAGRAMMATIC ONLY AND THAT FINAL PLACEMENT OF EQUIPMENT OR DEVICES IN THE FIELD MAY NOT DIRECTLY CORRESPOND TO THAT WHICH IS SHOWN ON THE DRAWINGS. IF A CONFLICT IN POSITIONING OCCURS THE CONTRACTOR IS TO NOTIFY THE ENGINEER IMMEDIATELY TO ASCERTAIN WHAT THE INTENT WAS BY THE DESIGN PROFESSIONAL.

5. SURVEY AND MEASUREMENTS:

   A. PRIOR TO SUBMITTING BID, VISIT SITE AND IDENTIFY EXISTING CONDITIONS AND DIFFICULTIES THAT WILL AFFECT WORK TO BE PERFORMED. NO COMPENSATION WILL BE GRANTED FOR ADDITIONAL WORK CAUSED BY UNFAMILIARITY WITH SITE CONDITIONS THAT ARE VISIBLE OR READILY IDENTIFIED BY EXPERIENCED OBSERVERS. INCLUDE IN THE BID ALL DEMOLITION WORK REQUIRED.

   B. DO NOT SCALE DRAWINGS. SCALE INDICATED ON DRAWINGS IS FOR ESTABLISHING REFERENCE POINTS ONLY. ACTUAL FIELD CONDITIONS SHALL GOVERN ALL DIMENSIONS.

   C. PRIOR TO ORDERING ANY MATERIALS AND EQUIPMENT, THOROUGHLY REVIEW THE SITE CONDITIONS TO DETERMINE IF ADEQUATE CLEARANCES AND ACCESS IS ALLOWED TO INSTALL THE COMPONENTS. ORDER EQUIPMENT BROKEN DOWN AS NECESSARY TO ALLOW FOR PROPER RIGGING THROUGH THE PROJECT AREA. PROVIDE ALL NECESSARY ALTERATIONS TO THE STRUCTURE OF THE BUILDING AS NECESSARY TO RIG THE EQUIPMENT IN PLACE.

   D. ARRANGE INSTALLATION TO PROVIDE ACCESS TO EQUIPMENT FOR EASY MAINTENANCE AND REPAIR.

6. CODES AND STANDARDS: ALL WORK SHALL BE COMPLETED IN ACCORDANCE WITH THE LATEST STATE OF CONNECTICUT ACCEPTED VERSION OF THE FOLLOWING

   A. INTERNATIONAL RESIDENTIAL CODE

   B. INTERNATIONAL BUILDING CODE

   C. INTERNATIONAL PLUMBING CODE

   D. INTERNATIONAL MECHANICAL CODE

   E. NATIONAL ELECTRIC CODE (NFPA 70)

   F. THE LIFE SAFETY CODE (NFPA 101)

7. PERMITS AND FEES: THE CONTRACTOR SHALL GIVE ALL NECESSARY NOTICES, OBTAIN ALL PERMITS; AND PAY ALL GOVERNMENT AND STATE SALES TAXES AND FEES WHERE APPLICABLE, AND OTHER COSTS, INCLUDING UTILITY CONNECTIONS OR EXTENSIONS IN CONNECTION WITH THE WORK. FILE ALL NECESSARY DRAWINGS, PREPARE ALL DOCUMENTS AND OBTAIN ALL NECESSARY APPROVALS OF ALL GOVERNMENTAL AND STATE DEPARTMENTS HAVING JURISDICTION, OBTAIN ALL REQUIRED CERTIFICATES OF INSPECTION FOR HIS WORK, AND DELIVER A COPY TO THE OWNER AND ENGINEER BEFORE REQUEST FOR ACCEPTANCE AND FINAL PAYMENT FOR THE WORK.

8. SHOP DRAWINGS:

   A. SUBMIT NEWLY PREPARED INFORMATION, DRAWN TO ACCURATE SCALE OF 1/4"=1'0". HIGHLIGHT, ENCIRCLE, OR OTHERWISE INDICATE DEVIATIONS FROM THE CONTRACT DOCUMENTS. DO NOT REPRODUCE CONTRACT DOCUMENTS OR COPY STANDARD INFORMATION AS THE BASIS OF SHOP DRAWINGS. STANDARD INFORMATION PREPARED WITHOUT SPECIFIC REFERENCE TO THE PROJECT IS NOT CONSIDERED SHOP DRAWINGS.

   B. SHOP DRAWINGS INCLUDE EQUIPMENT SUBMITTALS, FABRICATION AND INSTALLATION DRAWINGS, SETTING DIAGRAMS, SCHEDULES, PATTERNS, TEMPLATES AND SIMILAR DRAWINGS. INCLUDE THE FOLLOWING INFORMATION:

      a. DIMENSIONS.

      b. IDENTIFICATION OF PRODUCTS AND MATERIALS INCLUDED.

      c. COMPLIANCE WITH SPECIFIED STANDARDS AND PERFORMANCE DATA AS INDICATED.

      d. NOTATION OF COORDINATION REQUIREMENTS.

      e. NOTATION OF DIMENSIONS ESTABLISHED BY FIELD MEASUREMENT.

      f. SUBMIT 3 BLACK-LINE PRINTS AND 2 ADDITIONAL PRINTS WHERE REQUIRED FOR MAINTENANCE MANUALS, PLUS THE NUMBER OF PRINTS NEEDED BY THE ENGINEER FOR DISTRIBUTION. ONE PRINT WILL BE RETAINED; THE REMAINDER RETURNED. ONE OF THE PRINTS RETURNED SHALL BE MARKED-UP AND MAINTAINED AS A "RECORD DOCUMENT".

      g. DO NOT USE SHOP DRAWINGS WITHOUT AN APPROPRIATE FINAL STAMP INDICATING ACTION TAKEN IN CONNECTION WITH CONSTRUCTION.

      h. DO NOT ORDER ANY MATERIALS OR EQUIPMENT PRIOR TO RECEIVING FINAL APPROVED SHOP DRAWINGS.

      i. PROVIDE SUBMITTALS AS INDICATED IN SPECIFIC SPECIFICATION SECTIONS.

9. USE ADEQUATE NUMBERS OF SKILLED WORKMEN WHO ARE THOROUGHLY TRAINED AND EXPERIENCED IN THE NECESSARY CRAFTS AND WHO ARE COMPLETELY FAMILIAR WITH THE SPECIFIED REQUIREMENTS AND THE METHODS NEEDED FOR PROPER PERFORMANCE OF THE WORK.

10. THE CONTRACTOR SHALL COORDINATE ALL INTERRUPTIONS OF SERVICES AND LIMITATIONS OF ACCESS WITH THE OWNER NO LESS THAN 5 DAYS PRIOR TO THE INTERRUPTION.

11. OPERATION AND MAINTENANCE

   A. UPON COMPLETION OF ALL WORK AND TESTS, THE CONTRACTOR SHALL INSTRUCT THE OWNER OR THE OWNER'S REPRESENTATIVE IN THE OPERATION, ADJUSTMENT AND MAINTENANCE OF ALL EQUIPMENT FURNISHED. THE CONTRACTOR SHALL GIVE AT LEAST SEVEN (7) DAYS NOTICE TO THE OWNER AND THE ENGINEER IN ADVANCE OF THIS PERIOD.

   B. THE CONTRACTOR SHALL PREPARE THREE (3) COPIES OF A COMPLETE OPERATION AND MAINTENANCE MANUAL, BOUND IN BOOKLET FORM. ORGANIZE OPERATING AND MAINTENANCE DATA INTO SUITABLE SETS OF MANAGEABLE SIZE. BIND PROPERLY INDEXED DATA IN INDIVIDUAL HEAVY-DUTY 3-RING VINYL-COVERED BINDERS, WITH POCKET FOLDERS FOR FOLDED SHEET INFORMATION AND DESIGNATION PARTITIONS WITH IDENTIFICATION TABS. MARK APPROPRIATE IDENTIFICATION ON FRONT AND SPINE OF EACH BINDER.

   C. OPERATION AND MAINTENANCE MANUAL SHALL INCLUDE THE FOLLOWING:

      a. MANUFACTURER'S PRINTED OPERATING AND MAINTENANCE PROCEDURES.

      b. MAINTENANCE PROCEDURES FOR ROUTINE PREVENTATIVE MAINTENANCE AND TROUBLESHOOTING.

      c. COPIES OF WARRANTIES.

      d. APPROVED SHOP DRAWINGS AND PRODUCT DATA.

      e. BALANCE REPORTS.

      f. INCLUDE IN THE MANUAL, A TABULATED EQUIPMENT SCHEDULE FOR ALL EQUIPMENT. SCHEDULE SHALL INCLUDE PERTINENT DATA SUCH AS: MAKE, MODEL NUMBER, SERIAL NUMBER, VOLTAGE, NORMAL OPERATING CURRENT, BELT SIZE, FILTER QUANTITIES AND SIZES, BEARING NUMBER, ETC. SCHEDULE SHALL INCLUDE MAINTENANCE TO BE DONE AND FREQUENCY.

      g. MAINTENANCE AND INSTRUCTION MANUALS SHALL BE SUBMITTED TO THE OWNER AT THE SAME TIME AS THE SEVEN (7) DAY NOTICE IS GIVEN PRIOR TO THE INSTRUCTION PERIOD.

12. AS-BUILT DRAWINGS

   A. PREPARE AS-BUILT DRAWINGS TO A SCALE OF 1/4"=1'-0" OR LARGER; DETAILING THE ACTUAL INSTALLATION OF MAJOR ELEMENTS, COMPONENTS, AND SYSTEMS OF MECHANICAL EQUIPMENT AND MATERIALS. WHERE SHOP DRAWINGS ARE USED, RECORD A CROSS-REFERENCE AT THE CORRESPONDING LOCATION ON THE AS-BUILT DRAWINGS. GIVE PARTICULAR ATTENTION TO CONCEALED ELEMENTS THAT WOULD BE DIFFICULT TO MEASURE AND RECORD AT A LATER DATE.

   B. MARK NEW INFORMATION THAT IS IMPORTANT TO THE OWNER, BUT WAS NOT SHOWN ON CONTRACT DRAWINGS OR SHOP DRAWINGS.

   C. NOTE RELATED CHANGE ORDER NUMBERS WHERE APPLICABLE.

   D. ORGANIZE AS-BUILT DRAWINGS INTO MANAGEABLE SETS, BIND WITH DURABLE PAPER COVER SHEETS, AND PRINT SUITABLE TITLES, DATES AND OTHER IDENTIFICATION ON THE COVER OF EACH SET.

13. OBTAIN IN OWNER'S NAME WRITTEN EQUIPMENT AND MATERIAL WARRANTIES OFFERED IN MANUFACTURER'S PUBLISHED PRODUCT DATA WITHOUT EXCLUSION OR LIMITATION.

14. GUARANTEE WORK OF THESE CONTRACT DOCUMENTS IN WRITING FOR NOT LESS THAN ONE (1) YEAR FROM DATE OF FINAL NOTICE OF ACCEPTANCE. REPAIR OR REPLACE DEFECTIVE MATERIALS, EQUIPMENT, WORKMANSHIP AND INSTALLATION THAT DEVELOP WITHIN THIS PERIOD, PROMPT AND TO OWNER'S SATISFACTION AND CORRECT DAMAGE CAUSED IN MAKING NECESSARY REPAIRS AND REPLACEMENTS UNDER GUARANTEE WITHIN CONTRACT PRICE.

15. SUBMIT TO THE OWNER AN OFFICIAL CERTIFICATE OF INSURANCE FOR THEIR RECORDS.

MEANS AND METHODS ALL TRADES

1. INSTALL ALL EQUIPMENT AND MATERIALS IN ACCORDANCE WITH MANUFACTURER'S RECOMMENDATIONS

2. DO NOT BURN WASTE MATERIALS. DO NOT BURY DEBRIS OR EXCESS MATERIALS ON THE OWNER'S PROPERTY. DO NOT DISCHARGE VOLATILE, HARMFUL OR DANGEROUS MATERIALS INTO DRAINAGE SYSTEMS. REMOVE AND DISPOSE OF ALL WASTE MATERIALS, PACKAGING MATERIAL, SKIDS ETC. FROM THE SITE AND DISPOSE OF IN A LAWFUL MANNER IN ACCORDANCE WITH MUNICIPAL, STATE AND FEDERAL REGULATIONS.

3. MATERIALS AND EQUIPMENT SHALL BE UL LISTED WHERE STANDARD HAS BEEN ESTABLISHED.

4. CAREFULLY INSPECT ALL BUILDING ELEMENTS PRIOR TO CUTTING OR DRILLING INTO WALL, FLOORS OR CEILINGS. PATCH AND PAINT SURFACES DISTURBED BY WORK UNDER THIS CONTRACT AS REQUIRED TO RESTORE THEM TO THEIR ORIGINAL CONDITION.

5. SCAFFOLDING, RIGGING, HOISTING: THE CONTRACTOR SHALL FURNISH ALL SCAFFOLDING, RIGGING, HOISTING AND SERVICES NECESSARY FOR ERECTION AND DELIVERY INTO THE PREMISES ANY EQUIPMENT AND APPARATUS FURNISHED UNDER THIS DIVISION. REMOVE SAME FROM PREMISES WHEN NO LONGER REQUIRED.

6. EXCAVATION AND BACKFILLING: IT IS THE RESPONSIBILITY OF THE CONTRACTOR TO COORDINATE SIZES, DEPTHS, FILL AND BEDDING REQUIREMENTS AND ANY OTHER EXCAVATION WORK REQUIRED UNDER THESE SPECIFICATIONS

7. WATERPROOFING: WHERE ANY WORK PIERCES WATERPROOFING, INCLUDING WATERPROOF CONCRETE, ROOFS, EXTERIOR WALLS AND FLOORS IN WET AREAS, THE METHOD OF INSTALLATION SHALL BE REVIEWED BY THE ENGINEER BEFORE WORK IS DONE. THE CONTRACTOR SHALL FURNISH ALL NECESSARY SLEEVES, CAULKING AND FLASHING REQUIRED TO MAKE OPENINGS ABSOLUTELY WATERTIGHT.

8. PROVIDE FIRESTOPPING AROUND ALL FIRE PROTECTION, PLUMBING, MECHANICAL AND ELECTRICAL PENETRATIONS THROUGH FIRE RATED PARTITIONS. PROVIDE ASBESTOS FREE FIRESTOPPING SYSTEM CAPABLE OF MAINTAINING AN EFFECTIVE BARRIER AGAINST FLAME AND GASES. SYSTEM SHALL BE UL LISTED AND COMPLY WITH ASTM E 814.

9. ACCESS DOORS SHALL BE PROVIDED IN CEILINGS, WALLS AND FLOORS AT ALL DAMPERS, VALVES, CONTROL DEVICES, AND OTHER APPARATUS AND EQUIPMENT REQUIRING PERIODIC SERVICE AND INSPECTION. COORDINATE TYPE AND LOCATION WITH ARCHITECTURAL PLANS.

10. SEISMIC RESTRAINTS SHALL BE INSTALLED AS REQUIRED PER BUILDING CODE AND FIRE SAFETY CODE. RESTRAINTS SHALL BE INSTALLED IN ACCORDANCE WITH NFPA 13 AND SMACNA STANDARDS. SUBMIT SHOP DRAWINGS INCLUDING SEISMIC CALCULATIONS WITH PROFESSIONAL ENGINEER'S SEAL FOR REVIEW BY ENGINEER.

PLUMBING

1. PIPING:

   A. DOMESTIC WATER PIPING SHALL BE COPPER TUBING TYPE L. SOLDER FILLER METALS SHALL BE 95-5 TIN-ANTIMONY SOLDER JOINTS.

   B. WASTE AND VENT [STORM] PIPING SHALL BE PVC, TYPE DWV PIPE AND FITTINGS WITH SOLVENT CEMENTED JOINTS.

   C. NATURAL GAS PIPING SHALL BE SCHEDULE 40, CARBON STEEL PIPE, WITH THREADED JOINTS AND FITTINGS OR TYPE L COPPER TUBING.

2. FLUE AND COMBUSTION AIR PIPING
   A. ALL NATURAL GAS FIRED EQUIPMENT COMBUSTION AIR PIPING, FLUE AND JOINTS SHALL BE SCHEDULE 40 POLYVINYL CHLORIDE (PVC). JOINTS SHALL BE SOLVENT WELD.

3. INSULATION:

   A. INSULATION SHALL BE IN ACCORDANCE WITH LATEST EDITION OF THE IECC EXCEPT THAT PIPE INSULATION SHALL NOT BE LESS THAN 1" THICK. ALL INSULATION MATERIALS, ADHESIVES, COATINGS, AND OTHER ACCESSORIES SHALL HAVE FLAME SPREAD RATINGS OF 25 OR LESS, AND SMOKE DEVELOPED RATINGS OF 50 OR LESS AS TESTED BY ASTM E 84 (NFPA 255) METHOD. ALL INSULATION MATERIALS SHALL BE INSTALLED IN ACCORDANCE WITH THE MANUFACTURERS RECOMMENDATIONS AND IN ACCORDANCE WITH THE LATEST EDITION OF SMACNA AND ASHRAE STANDARDS.

   B. PIPE INSULATION SHALL BE FIBERGLASS WITH VAPOR BARRIER JACKET. PROVIDE INSULATION FOR THE FOLLOWING PIPING SYSTEMS:

      a. DOMESTIC COLD WATER PIPING

      b. DOMESTIC HOT WATER PIPING

   C. ALL EXPOSED DOMESTIC WATER PIPE SHALL BE WRAPPED WITH A PVC VAPOR BARRIER JACKET AS MANUFACTURED BY ZESTON OR APPROVED EQUAL. PVC JACKETING SHALL BE FINISHED TO BE WATER TIGHT.

4. PIPING INSTALLATION:

   A. INSTALL PIPING IN ACCORDANCE WITH ALL APPLICABLE CODES AND GOOD PRACTICES.

   B. INSTALL UNIONS OR FLANGES IN PIPES ADJACENT TO EACH VALVE, CONTROL DEVICE AND AT FINAL CONNECTIONS EACH PIECE OF EQUIPMENT.

   C. INSTALL DIELECTRIC UNIONS TO JOIN DISSIMILAR METALS.

   D. INSTALL AND ANCHOR PIPING TO ENSURE PROPER EXPANSION AND CONTRACTION.

   E. ANCHOR PIPING TO ENSURE PROPER DIRECTION OF EXPANSION AND CONTRACTION.

   F. SUPPORT PIPING TO PREVENT VIBRATION OR SAGGING. PROVIDE HANGER SPACING ACCORDING TO DISTANCES LISTED IN APPLICABLE CODES AND REGULATIONS.

5. PLUMBING IDENTIFICATION

   A. PLUMBING IDENTIFICATION WORK SHALL COMPLY WITH ANSI A13.1. NAMES, ABBREVIATIONS AND OTHER DESIGNATIONS USED IN MECHANICAL IDENTIFICATION WORK, SHALL CORRESPOND WITH DESIGNATIONS SHOWN. SPECIFIED OR SCHEDULED.

   B. VALVE TAGS SHALL BE 1-1/2' DIAMETER, 19-GAGE POLISHED BRASS WITH STAMP-ENGRAVED LETTERING. ATTACH VALVES IN ACCORDANCE WITH MANUFACTURER'S RECOMMENDATIONS.

   C. PROVIDE VALVE TAG ON EVERY VALVE, EXCLUDING DRAIN VALVES.

   D. PIPE IDENTIFICATION, PLASTIC PIPE MARKERS, FACTORY FABRICATED, FLEXIBLE, SEMI-RIGID PLASTIC. PERFORMED TO FIT AROUND PIPE OR PIPE COVERING, MINIMUM INFORMATION INDICATING FLOW DIRECTION ARROW AND IDENTIFICATION OF FLUID BEING CONVEYED.

6. TESTING AND. ADJUSTING

   A. ALL WATER PIPING SHALL BE TESTED IN ACCORDANCE WITH THE INTERNATIONAL PLUMBING CODE. THE SYSTEM SHALL BE PROVED TIGHT UNDER WATER PRESSURE OF 100 PSIG. THE PRESSURE SHALL BE APPLIED GRADUALLY AND THEN HELD FOR A MINIMUM OF TWO HOURS.

   B. ALL WASTE PIPING SHALL BE TESTED IN ACCORDANCE WITH THE INTERNATIONAL PLUMBING CODE. THE SYSTEM SHALL BE FILLED WITH WATER TO A HEAD OF NOT LESS THAN 10 FEET. THE WATER LEVEL AT THE TOP OF THE TEST HEAD OF WATER SHALL NOT DROP FOR AT LEAST 15 MINUTES.

   C. THE CONTRACTOR SHALL PROVIDE ALL NECESSARY EQUIPMENT FOR ALL TESTING.

ELECTRICAL SPECIFICATIONS

1. CONTACT THE POWER COMPANY FOR NECESSARY COORDINATION OF SERVICE REQUIREMENTS AND PAY FOR ALL RELATED CHARGES FOR THE SERVICE INSTALLATION. PROVIDE ALL NECESSARY EQUIPMENT, GROUNDING, CONDUITS, WIRE, TRENCHING, SAND AND BACKFILL ETC., FOR THE POWER COMPANY SERVICE CONNECTIONS AND ACTIVATION OF SERVICE FOR THE PROJECT. ALL EQUIPMENT SHALL MEET THE POWER COMPANIES REQUIREMENTS AND SHALL BE SUBMITTED TO THE POWER COMPANY PRIOR TO ORDERING OR INSTALLATION.

2. CONTACT THE TELEPHONE COMPANY FOR NECESSARY COORDINATION OF SERVICE REQUIREMENTS AND PAY FOR ALL RELATED CHARGES FOR THE SERVICE INSTALLATION. PROVIDE ALL BOXES, TERMINATIONS, CONDUITS AND WIRING PER DRAWINGS.

3. CONTACT THE CABLE TELEVISION COMPANY FOR NECESSARY COORDINATION OF SERVICE REQUIREMENTS AND PAY FOR ALL RELATED CHARGES FOR THE SERVICE INSTALLATION. PROVIDE ALL BOXES, TERMINATION, CONDUITS AND WIRING PER DRAWINGS.

4. SERVICE-DISCONNECTING MEANS SHALL BE OF THE TYPE AS INDICATED WITH EXTERNAL HANDLE FOR MANUAL OPERATION. WHEN SERVICE DISCONNECTING MEANS IS A PART OF AN ASSEMBLY, THE ASSEMBLY SHALL BE LISTED AS SUITABLE FOR SERVICE ENTRANCE EQUIPMENT. ENCLOSURES SHALL BE SHEET METAL WITH HINGED COVER FOR SURFACE MOUNTING UNLESS OTHERWISE INDICATED.

5. MOUNT PANELBOARDS, CIRCUIT BREAKERS, AND DISCONNECTING SWITCHES SO HEIGHT OF OPERATING HANDLE AT ITS HIGHEST POSITION IS MAXIMUM 78 INCHES ABOVE FLOOR.

6. GROUNDING SHALL BE COMPLETED IN ACCORDANCE WITH NFPA 70.

   A. GROUND EXPOSED, NON-CURRENT-CARRYING METALLIC PARTS OF ELECTRICAL EQUIPMENT, GROUNDING CONDUCTOR IN NONMETALLIC RACEWAYS, GROUNDING CONDUCTOR OF NONMETALLIC SHEATHED CABLES, AND NEUTRAL CONDUCTOR OF WIRING SYSTEMS.

   B. MAKE GROUND CONNECTION AT MAIN SERVICE EQUIPMENT, AND EXTEND GROUNDING CONDUCTOR TO POINT OF ENTRANCE OF METALLIC WATER SERVICE. MAKE CONNECTION TO WATER PIPE BY SUITABLE GROUND CLAMP WITH METER JUMPER OR LUG CONNECTION TO PLUGGED TEE. IF FLANGED PIPES ARE ENCOUNTERED, MAKE CONNECTION WITH LUG BOLTED TO STREET SIDE OF FLANGED CONNECTION. SUPPLEMENT METALLIC WATER SERVICE GROUNDING SYSTEM WITH ADDITIONAL MADE ELECTRODE IN COMPLIANCE WITH NFPA 70. MAKE GROUND CONNECTION TO DRIVEN GROUND RODS ON EXTERIOR OF BUILDING. GROUND RODS SHALL BE OF COPPER-CLAD STEEL CONFORMING TO UL 467 NOT LESS THAN 19.1 MM (3/4 INCH) IN DIAMETER BY 2.4 METER (8 FEET) IN LENGTH OF THE SECTIONAL TYPE DRIVEN FULL LENGTH INTO THE EARTH WHERE GROUND FAULT PROTECTION IS EMPLOYED, ENSURE THAT CONNECTION OF GROUND AND NEUTRAL DOES NOT INTERFERE WITH CORRECT OPERATION OF FAULT PROTECTION.

8. WIRING SHALL BE COMPLETED IN ACCORDANCE WITH NFPA 70.

   A. CONDUCTORS NO. 8 AWG AND LARGER DIAMETER SHALL BE STRANDED ANNEALED COPPER. CONDUCTORS NO. 10 AWG AND SMALLER DIAMETER SHALL BE SOLID ANNEALED COPPER. CONDUCTOR SIZES AND AMPACITIES SHOWN ARE BASED ON COPPER, UNLESS INDICATED OTHERWISE. UNLESS SPECIFIED OR INDICATED OTHERWISE OR REQUIRED BY NFPA 70. UNLESS OTHERWISE INDICTED WIRING METHODS SHALL BE:

      a. SERVICE ENTRANCE WIRING AND WIRING TO DISTRIBUTION PANELS. WIRES SHALL BE IN PVC CONDUIT AND SHALL BE 600-VOLT, TYPE THWN/THHN ANNEALED COPPER.

      b. BRANCH CIRCUITING INSIDE THE BUILDING IN DRY AREAS SHALL BE 600 VOLT, TYPE NM-B.

      c. BRANCH CIRCUITING OUTSIDE THE BUILDING AND IN WET/DAMP AREAS SHALL BE 600 VOLT, TYPE UF-B.

      d. WIRES SUBJECT TO DAMAGE SHALL BE IN PVC CONDUIT.

   B. MAKE ALL SPLICES IN ACCESSIBLE LOCATIONS. MAKE SPLICES IN CONDUCTORS NO. 10 AWG AND SMALLER DIAMETER WITH INSULATED, PRESSURE-TYPE CONNECTOR. MAKE SPLICES IN CONDUCTORS NO. 8 AWG AND LARGER DIAMETER WITH SOLDERLESS CONNECTOR, AND COVER WITH INSULATION MATERIAL EQUIVALENT TO CONDUCTOR INSULATION.

   C. PHASE CONDUCTORS SHALL BE IDENTIFIED BY COLOR CODING. THE COLOR OF THE INSULATION ON PHASES A AND B RESPECTIVELY (FOR SINGLE PHASE) OF DIFFERENT VOLTAGE SYSTEMS SHALL BE AS FOLLOWS: 120/240 VOLT, SINGLE/PHASE: BLACK AND RED.

9. BOXES:

   A. ALL OUTLETS, SWITCH AND JUNCTION BOXES SHALL BE NONMETALLIC BOXES.

   B. BOXES SHALL BE SIZED IN ACCORDANCE WITH NFPA 70.

   C. EXTERIOR BOXES SHALL BE GASKETED AND WATERTIGHT.

10. OUTLETS AND SWITCHES:

   A. ALL OUTLETS AND SWITCHES SHALL BE WHITE.

   B. MOUNT LIGHTING SWITCHES 48 INCHES ABOVE FINISHED FLOOR, RECEPTACLES 18 INCHES ABOVE FINISHED FLOOR, AND OTHER DEVICES AS INDICATED. MEASURE MOUNTING HEIGHTS OF WIRING DEVICES AND OUTLETS TO TOP OF DEVICE OR OUTLET.

   C. SINGLE AND DUPLEX RECEPTACLES SHALL BE RATED 15 AMPERES, 125 VOLTS, TWO-POLE, THREE-WIRE, GROUNDING TYPE WITH POLARIZED PARALLEL SLOTS. RECEPTACLE SHALL BE SIDE OR BACK WIRED WITH TWO SCREWS PER TERMINAL. THE THIRD GROUNDING POLE SHALL BE CONNECTED TO THE METAL MOUNTING YOKE.

   D. RECEPTACLES WITH GROUND FAULT CIRCUIT INTERRUPTERS SHALL HAVE THE CURRENT RATING AS INDICATED, AND SHALL BE UL CLASS A TYPE UNLESS OTHERWISE SHOWN. GROUND FAULT CIRCUIT PROTECTION SHALL BE PROVIDED AS REQUIRED BY NFPA 70 AND AS INDICATED ON THE DRAWINGS.

   E. WALL SWITCHES SHALL BE OF THE TOTALLY ENCLOSED TUMBLER TYPE. WIRING TERMINALS SHALL BE OF THE SCREW TYPE OR OF SOLDERLESS PRESSURE TYPE HAVING SUITABLE CONDUCTOR-RELEASE ARRANGEMENT. SWITCHES SHALL BE RATED 15 AMPERE 120/277-VOLT FOR USE ON ALTERNATING CURRENT ONLY.

   F. DEVICE PLATES SHALL BE ONE-PIECE TYPE AND BE PROVIDED FOR ALL RECEPTACLES, OUTLETS, SWITCHES AND FITTINGS. PLATES ON UNFINISHED WALLS AND ON FITTINGS SHALL BE OF IMPACT RESISTANT PLASTIC HAVING ROUNDED OR BEVELED EDGES. PLATES ON FINISHED WALLS SHALL BE IMPACT-RESISTANT PLASTIC. PLATES SHALL BE INSTALLED WITH ALL FOUR EDGES IN CONTINUOUS CONTACT WITH FINISHED WALL SURFACES WITHOUT THE USE OF MATS OR SIMILAR DEVICES. PLATES SHALL BE INSTALLED WITH AN ALIGNMENT TOLERANCE OF 1/16 INCH. THE USE OF SECTIONAL-TYPE DEVICE PLATES WILL NOT BE PERMITED. PLATES INSTALLED IN WET LOCATIONS SHALL BE GASKETED AND PROVIDED WITH A HINGED, GASKETED COVER, UNLESS OTHERWISE SPECIFIED.

11. PROVIDE ALL NECESSARY JUNCTION BOXES, PULL BOXES, PULL WIRES, COVER PLATES AND OTHER MISCELLANEOUS EQUIPMENT WHICH IS NOT SHOWN ON THE CONTRACT DOCUMENTS BUT NECESSARY TO COMPLETE THE WORK.

12. PROVIDE ALL NECESSARY WIRE, CONDUIT AND EQUIPMENT TO SUPPLY POWER TO THE HEATING, VENTILATION AND AIR CONDITIONING EQUIPMENT, AND PLUMBING EQUIPMENT.

13. COORDINATE ALL WORK WITH OTHER TRADES AND ARRANGE INSTALLATION TO AVOID CLASHES BETWEEN EQUIPMENT, WORK OF OTHER TRADES AND BUILDING STRUCTURE.

CAPITAL STUDIO
architects LLC
1379 MAIN STREET EAST HARTFORD CT. 06108
860.289.3262 fax 860.289.3163

THE STATE OF CONNECTICUT DEPARTMENT OF HOUSING (DOH) COMMUNITY DEVELOPMENT BLOCK GRANT - DISASTER RECOVERY (CDBG-DR) DOH OCCUPIED REHABILITATION and REBUILDING PROGRAM (OORR)

REILLY RESIDENCE REHABILITATION and MITIGATION
APPLICATION No. 1180
14 Waverly Park Road
Branford, CT 06405

CES
Consulting Engineering Services, Inc.
1811 Middle Street
Middletown, CT 06457
Tel. (860) 632-1682
Fax. (860) 632-1758
CES #2014064.00

date	description	no.

revisions

MEP-5.2

date	JANUARY 26, 2015
drawn	ANK/VCM
scale	AS SHOWN
checked	DTB
project no.	1347-02
application no.	1180