CAIN RESIDENCE

Limited Hazardous Materials Inspection Report

19 Stevens Street
East Haven, CT
Connecticut Department of Housing Application No. 1010
Lothrop Associates Project No. 1524-20

Lothrop Associates LLP

Hartford, CT

April, 2014
Revised July 2014

Fuss & O'Neill EnviroScience, LLC
56 Quarry Road
Trumbull, CT 06611

Project No. 20140370.A1E

Table of Contents

Limited Hazardous Materials Inspection Report
Lothrop Associates LLP

1 Introduction 1

2 Asbestos Inspection 1

2.1 Results 3
2.2 Discussion 5
2.3 Conclusion 5

3 Lead-Based Paint Testing 6

3.1 Results 6
3.2 TCLP Analysis 6
3.3 Lead in Soil 6
3.4 Conclusion 7

4 Mold Visual Assessment 8

4.1 Observations 8
4.2 Recommendations 8

5 Airborne Radon Information, Sampling and Procedure 9

5.1 Radon Facts and Health Effects 9
5.2 Airborne Radon Sampling 9
5.3 Airborne Radon Quality Assurance Procedure 10
5.4 Airborne Radon Analytical Results 10
5.5 Conclusion 11

Appendices

APPENDIX A - FUSS & O'NEILL ENVIROSCIENCE CERTIFICATIONS
APPENDIX B - ~~XXXX

1 Introduction

On April 9, 2014, through April 11, 2014, Fuss & O'Neill EnviroScience, LLC (EnviroScience) Environmental Analyst, Eduardo Miguel Marques, a State of Connecticut Licensed Asbestos and Certified Lead Paint Inspector, performed a limited hazardous materials inspection at 19 Stevens Street located in East Haven, Connecticut. On May 2, 2014, EnviroScience licensed lead inspector/risk assessor, Ulkens Auguste, performed lead in soil testing. Refer to *Appendix A* for EnviroScience certifications and licenses.

This inspection was performed in response to the Connecticut Department of Housing Community Development Block Grant Disaster Recovery (CDBG-DR) "Hurricane Sandy". The inspection included the following:

- Inspection for asbestos containing materials (ACM)
- Comprehensive lead based-paint inspection
- Mold visual assessment
- Airborne radon assessment

The asbestos inspection was limited and addressed specific materials to be impacted by renovation activities as detailed in the Lothrop Associates LLP initial property inspection report. Refer to *Appendix B* for report.

2 Asbestos Inspection

A Property Owner must ensure that performance of a thorough inspection for asbestos-containing materials (ACM), prior to possible disturbance of materials containing asbestos during renovation or demolition, is conducted. This is a requirement of the U.S. Environmental Protection Agency (EPA) National Emission Standards for Hazardous Air Pollutants (NESHAP) regulation 40 CFR Part 61, Sub-Part M.

This includes Friable, Non-Friable Category I, and Non-Friable Category II ACM.

- A Friable Material is defined as material that contains greater than one percent (>1%) asbestos, that when dry **can** be crumbled, pulverized, or reduced to powder by hand pressure.
- A Category I Non-Friable Material refers to material that contains greater than one percent (>1%) asbestos (e.g. packings, gaskets, resilient floor coverings, asphalt roofing products, etc.) that when dry **cannot** be crumbled, pulverized, or reduced to powder by hand pressure.
- A Category II Non-Friable Material refers to any non-friable material (excluding Category I materials) that contains greater than one percent (>1%) asbestos that when dry **cannot** be crumbled, pulverized, or reduced to powder by hand pressure.

During this inspection, suspect ACM were separated into three EPA categories. These categories are: thermal system insulation (TSI), surfacing ACM, and miscellaneous ACM. TSI includes all materials used to prevent heat loss or gain or water condensation on mechanical systems. Examples of TSI are pipe insulation, boiler insulation, duct insulation, and mudded insulation on pipe fittings. Surfacing ACM includes all ACM that is sprayed, troweled, or otherwise applied to an existing surface. Surfacing ACM is

commonly used for fireproofing, decorative, and acoustical applications. Miscellaneous materials include all ACM not listed in thermal or surfacing, such as linoleum, vinyl asbestos flooring, and ceiling tiles.

Samples are recommended to be collected in a manner sufficient to determine asbestos content and include homogenous building materials. The EPA NESHAP regulation does not specifically identify a minimum number of samples to be collected, but recommends the use of sampling protocols included in 40 CFR Part 763, Sub-Part E - Asbestos Containing Materials in Schools.

Samples of suspect asbestos-containing materials were collected in accordance with EPA recommendations and Asbestos Hazard Emergency Response Act (AHERA) protocols. The protocols included the following:

1. Surfacing Materials (SURF) (e.g. plaster, spray-on fireproofing, etc.) were collected in a randomly distributed manner representing each homogenous area based on the overall quantity represented by the sampling as follows:
   a. Three samples collected from each homogenous area that is less than or equal to (≤) 1,000 square feet.
   b. Five samples collected from each homogenous area that is greater than (>) 1,000 square feet, but less than or equal to 5,000 square feet.
   c. Seven samples collected from each homogenous area that is greater than (>) 5,000 square feet.

2. Thermal System Insulation (TSI) (e.g. pipe insulation, tank insulation, etc.) was collected in a randomly distributed manner representing each homogenous area. Three bulk samples were collected as representative of each homogeneous material type, and sent to laboratory for asbestos analysis. Also, a minimum of one sample of any patching material (less than 6 linear of square feet) applied to TSI was collected.

Miscellaneous Materials (MISC) (e.g. floor tile, gaskets, construction mastics, etc.) had a minimum of two samples collected as representative of each homogenous material type. Sampling was conducted in a manner sufficient to determine asbestos content of the homogenous material as determined by the Asbestos Inspector. If materials identified were of (significant) minimal quantity, only a single sample was collected.

The Asbestos Consultant – Inspector collected samples and prepared proper chain of custody for transmission of samples to an accredited laboratory for analysis by Polarized Light Microscopy (PLM). The sampling locations, material type, quantity, sample identification, and asbestos content are identified by bulk sample analysis in Tables 1 and 2 of the "Results" section and Table 3 of the "Discussion" section. Any materials on the site not listed in the following tables should be considered suspect ACM until sample results prove otherwise. Refer to *Appendix C* for PLM analytical results for asbestos bulk samples.

2.1 Results

Utilizing the EPA protocol and criteria, the following materials were determined to be **ACM**:

Table 1
Asbestos-Containing Materials

Sample No.	Location	Material Type	Estimated Quantity	Asbestos Content
040914EMM-17A	Exterior siding	Transite siding	1,500 SF	15% Chrysotile
040914EMM-22A	Roof	Flashing	1 chimney and 3 penetrations	8% Chrysotile
040914EMM-31	Kitchen	Sink undercoating	1 sink	6% Chrysotile
040914EMM-38A	Foyer	Sheet floor/backing	75 SF	40% Chrysotile
040914EMM-40A	Rm. 1 / corridor	Faux wood floor tile	400 SF	5% Chrysotile
040914EMM-42A-B	Rm. 4 – top layer	Faux wood floor tile – type II		Contaminated with bottom layer floor tile
040914EMM-45A	Rm. 3	Yellow sheet floor/backing (patch)	60 SF	30% Chrysotile
040914EMM-47A	Rm. 3	Bottom layer beige sheet flooring/backing		25% Chrysotile

Utilizing the EPA protocol and criteria, the following materials were determined to be **non-ACM**:

Table 2
Non-Asbestos Containing Materials

Sample No.	Location	Material Type
040914EMM-18A-B	Exterior	Fiberboard behind transite
040914EMM-19A-B	Exterior	Foundation mortar
040914EMM-20A-B	Roof	Bottom layer shingle
040914EMM-21A-B	Roof	Top layer shingle
040914EMM-23A-B	Rear flat roof	Rolled sheet roof
040914EMM-24A-B	Rear flat roof	Vapor barrier under sheet roof

Sample No.	Location	Material Type
040914EMM-25A-B	Interior	Paper backing to fiberglass wall insulation
040914EMM-26A-C	Kitchen	Textured ceiling – type I
040914EMM-27A-C	Foyer	Textured ceiling – type II
040914EMM-28A-C	Room 5	Textured ceiling – type III
040914EMM-29A-B	Room 4	1x1 ceiling tile
040914EMM-30A-B	Room 5	Glue daubs associated with ceiling tile
040914EMM-32A-B	Crawlspace	Paper backing to fiberglass insulation
040914EMM-33A-B	Room 2 – bath	Sink caulk
040914EMM-34A-B	Room 2 – bath	Shower panel adhesive
040914EMM-35A-B	Room 2 – bath	Shower panel caulk
040914EMM-36A-B	Room 1 – kitchen	Backing/adhesive associated with formica
040914EMM-37A-C	Windows (foyer, C side, D side)	Exterior window glazing compound
040914EMM-39A-B	Foyer	Yellow adhesive associated with sheet floor
040914EMM-41A-B	Rm. 1 / corridor	Brown mastic associated with faux wood floor tile
040914EMM-43A-B	Rm. 4 – top layer	Clear mastic associated with faux wood floor tile
040914EMM-44A-B	Rm. 2 – bath	Self-adhesive faux wood floor
040914EMM-46A-B	Rm. 3	Top layer self-adhesive flooring
040914EMM-48A-B	Kitchen	Bottom layer tan yellow floor
040914EMM-49A-B	Kitchen	Bottom layer mastic
040914EMM-50A-B	Kitchen	Top layer floor tile
040914EMM-51A-B	Kitchen	Top layer floor tile mastic
040914EMM-52A-C	Wall, wall, ceiling	Sheetrock/joint compound (composite)[1]
040914EMM-53A-C	Wall, wall, ceiling	Joint compound

Note: **1** See *Section 2.2* for Point Count Analysis

2.2 Discussion

The EPA defines any material that contains greater than one percent (>1%) asbestos, utilizing PLM, as being an ACM. Materials that are identified as "none detected" are specified as not containing asbestos. At EnviroScience, materials that are identified as containing less than four percent (<4%) asbestos are analyzed further utilizing the "point-counting" technique to verify asbestos content. This policy is supported by EPA requirements for "point-counting" confirmation of low level PLM results. The following samples were analyzed by point-counting based on initial PLM results of <4% asbestos.

Table 3
Analysis Results using Point-Counting

Sample No.	Location	Material	Asbestos Content	Verified ACM?
040914EMM-52C	Ceiling	Sheetrock/joint compound (composite)	0.50% Chrysotile	**No**

2.3 Conclusion

ACM identified in *Section 2.1 - Table 1* must be removed by a State of Connecticut licensed Asbestos Abatement Contractor prior to building renovations that will disturb the materials. This is a requirement of the State of Connecticut Department of Public Health (CTDPH) Standards for Asbestos Abatement.

The non-friable roofing materials identified in Section 2.1 - Table 1 have been de-regulated by the Connecticut Department of Public Health (CTDPH). The identified non-friable roofing materials can be removed either by a CTDPH licensed Asbestos Abatement Contractor or by a roofing contractor provided they adhere to all Occupational Safety and Health Administration (OSHA) training requirements and EPA NESHAP regulations. All asbestos waste must be properly sealed (leak/airtight containers) and disposed of in a landfill approved to accept asbestos waste. A licensed Asbestos Abatement Contractor is only required should the ACM be made friable and become a regulated asbestos containing material (RACM) by work activities. All applicable CTDPH regulations shall apply if the material becomes RACM. Materials containing trace amounts of asbestos less than 1% asbestos must comply with the Occupational Safety and Health Administration (OSHA) Asbestos in Construction regulations in regards to worker exposure to asbestos. Materials containing less than 1% asbestos if disturbed will be subject to the OSHA requirements to determine worker exposure and training requirements.

Materials containing trace amounts of asbestos less than 1% asbestos are not regulated by the above mentioned regulations and standards with the exception of the OSHA regulations with regard to worker exposure to asbestos. Materials noted as containing less than 1% asbestos if disturbed will be subject to the OSHA requirements to determine worker exposure and training requirements.

<u>Any suspect material encountered during renovation/demolition that is not identified in this report as being non-ACM, should be assumed to be ACM unless sample results prove otherwise.</u>

3 Lead-Based Paint Testing

Comprehensive testing for lead paint was performed at 19 Stevens Street in East Haven, Connecticut, by EnviroScience's Environmental Analyst Eduardo Miguel Marques on April 9, 2014, for the purpose of compliance with EPA's Renovation, Repair and Painting Rule (RRP) (40 CFR 745.80 through 92) and the U.S. Department of Housing and Urban Development (HUD) Lead-Safe Housing Rule (24 CFR 35. Sub-part B-R). A direct reading X-ray fluorescence (XRF) analyzer was used to perform the testing. The testing was conducted in accordance with the protocol outlined in the attached document: Testing Procedures and Equipment (*Appendix D).*

For the purpose of this testing, interior and exterior components representing the initial painting history of the buildings and any building-wide repainting by the owners/managers of these building components were tested. The purpose of this testing was to identify trends in the painting history of the buildings in order to determine if Toxicity Characteristic Leaching Procedure (TCLP) analysis is required.

The one-story residential building was constructed with wood. Window and door systems are composed of metal and wood and walls and ceilings are constructed of sheetrock. There were no children under the sage of six present within the residence at the time of the inspection.

3.1 Results

The testing indicated consistent painting trends throughout the building interior and exterior. No painted components were determined to contain toxic levels of lead (greater than 1.0 milligrams of lead per square centimeter of paint) with the exception of the following:

Table 4
Lead Painted Building Components

Item	Location	Reading (mg/cm^2)	Defective
Exterior wood faccia	Exterior	>9.9	No
Wood siding	Interior – entry foyer	6.3	No
Wood window well	Interior – Room 2	1.5	No
Wood window well	Interior – Room 5	1.0	Yes
Wood ceiling joist	Interior – room 3	1.4	No

The field testing sheets are provided as *Appendix E* in this report.

3.2 TCLP Analysis

If components of building that is slated for renovation or demolition have toxic levels of lead-based paint, a TCLP analysis needs to be conducted to determine whether the debris generated from demolition needs to be disposed of as lead waste. EPA has determined that if the result of the analysis is more than 5.0 mg/L (milligram per liter), the waste needs to be disposed of as lead-contaminated waste. The TCLP sample came back with a result of 0.89 mg/L.

The TCLP testing results are provided as *Appendix F* in this report.

3.3 Lead in Soil

On May 2, 2014, EnviorScience Lead Inspector/Risk Assessor collected one composite soil sample from the exterior bare soil area on the B-side of the residential structure. The sample result is as follows:

Table 5
Soil Sample Results

Sample No.	Location	Results
050214UA-39	B-side, composite at drip line	250 mg/kg

The soil sample result was below the Connecticut standard for lead in soil of 400 mg/kg (ppm). A lead in soil hazard does not exist in the bare soil area tested.

The analytical sample results and their locations are provided as *Appendix G* in this report.

3.4 Conclusion

The following building components were determined to contain toxic levels of lead (greater than 1.0 milligrams of lead per square centimeter of paint):

- Exterior wood faccia
- Wood siding – interior, entry foyer
- Wood window wells
- Wood ceiling joists – room 3

The TCLP sample came back with a result of 0.89 mg/L, which is below the Resource Conservation and Recovery Act (RCRA) standard of 5.0 mg/L. Therefore, the non-asbestos waste from 19 Stevens Street in East Haven, Connecticut, may be treated as and disposed of as standard construction debris.

The composite soil sample collected from the B-side bare soil area was determined to be acceptable and below the Connecticut standard for lead in soil.

The residential building is tentatively scheduled to be demolished, therefore, lead in dust and lead in drinking water was not assessed.

<u>The Contractor shall be aware that OSHA has not established a level of lead in a material below which 29 CFR 1926.62 does not apply. The Contractor shall comply with exposure assessment criteria, interim worker protection, and other requirements of the regulation as necessary to protect workers and building occupants.</u>

For purposes of complying with the U.S. Environmental Protection Agency's Renovation, Repair and Painting Rule (RRP) (40 CFR 745.80 through 92) a Comprehensive Lead Inspection of the entire structure

or targeted areas scheduled for renovation is necessary to determine if the RRP rule is applicable. A Comprehensive Lead Inspection includes testing representative coated surfaces of each building component in each room or room equivalent for Lead-Based paint content. All similar components to the surface tested on a per room basis shall be considered as having the same paint (e.g. If more than one window or door in a room typically only one is tested but remaining must be assumed to be the same as the one tested). **This inspection was performed as a comprehensive inspection of all representative surfaces within the residence that are scheduled to be disturbed and can be utilized to determine applicability requirements for the RRP rule on surfaces tested.**

Those surfaces which contain lead paint are subject to RRP work practice and training requirements if more than de-minimus amounts are disturbed in renovation or for projects involving window replacement. Those surfaces which do not contain lead paint are not subject to the RRP requirements. If a specific component or surface is not identified as having been tested it should be presumed to contain lead paint unless tested. Contractor's should be aware that the threshold limit of 1.0 mg/cm^2 for purposes of RRP requirements is not recognized by the Occupational Safety and Health Administration (OSHA) and workers' exposures are still subject to lead in construction regulation 29 CFR 1926.62 regardless of paint testing results.

4 Mold Visual Assessment

On April 9, 2014, EnviroScience representative Eduardo Miguel Marques performed a visual assessment for the presence of suspect mold and water intrusion. Based on our findings, suspected mold growth was identified in limited areas throughout the buildings on various types of building materials.

Potential exposure to mold during renovation should be considered and appropriate work protection, possible use of engineering controls and surface treatment of mold on building materials to remain should be considered.

4.1 Observations

During this inspection, evidence of water damage was observed on the floor and ceiling in the kitchen. Visual mold growth was identified along the lower sheetrock walls in rooms 3- 5.

4.2 Recommendations

Building materials to remain in areas of visible suspect mold growth should be cleaned and have a mold inhibitor applied to them, if possible. Remediation of visible suspect mold growth and removal of water damaged building materials should be performed under negative pressure using properly trained and protected workers. Removal should comply with guidance according to EPA and the Institute of Inspection, Cleaning and Restoration Certification (IICRC).

5 Airborne Radon Information, Sampling and Procedure

5.1 Radon Facts and Health Effects

Radon is a naturally-occurring radioactive gas produced by the natural breakdown (decay) of uranium which is found in soil and rock throughout the United States. Radon travels through soil and enters buildings through cracks and other penetrations in building foundations. Eventually the gas itself decays into radioactive particles (decay products) that can become trapped in the lungs during human respiration. As these particles in turn decay they release small bursts of radiation which can damage lung tissue and lead to lung cancer over the course of a person's lifespan.

EPA studies have found that radon concentrations in outdoor air average approximately 0.4 picoCuries per liter of air (pCi/L). However, radon and its decay products can accumulate too much higher concentrations inside a building. The EPA has adopted an action level of 4.0 pCi/L; equal to or above which the EPA recommends that building owners take action to reduce the level of airborne radon with the building.

Radon is a colorless, odorless and tasteless gas and thus the only way to know whether or not an elevated level of radon is present in a building is to test. Each frequently occupied room that is in contact with the ground should be measured as even adjacent rooms can have significantly different levels of radon.

Again, radon is a known human carcinogen. Prolonged exposure to elevated radon concentrations causes an increased risk of lung cancer. Like other environmental pollutants, there is some uncertainty about the magnitude of radon health risks. However, scientists are more certain about radon risks than risks from most other cancer-causing environmental pollutants as estimates of radon risk are based on studies of cancer in humans (underground miners). Additional studies on more typical, non-occupationally exposed, populations are underway.

EPA estimates that radon may cause about 14,000 lung cancer deaths in the U.S. each year, with a range of 7,000 to 30,000. The U.S. Surgeon General has warned that radon is the second-leading cause of lung cancer deaths after smoking, and is the leading cause among non-smokers.

5.2 Airborne Radon Sampling

On April 9, 2014 through April 11, 2014, EnviroScience representative Eduardo Miguel Marques set up passive radon detection canisters in the residence and then retrieved the same canisters at least 48 hours but not later than 96 hours later. The canisters were supplied by Radon Testing Corporation of America (RTCA). It is recommended that such canisters be placed at least 20 inches from the floor and 12 inches away from exterior walls. Also, it is recommended that the canisters not be placed near drafts resulting from HVAC intakes and returns, doors, and at least 36 inches from windows. Canisters should also not be exposed to direct sunlight, be covered up, or otherwise disturbed during the testing period. A closed building condition is also utilized for 12 hours prior to testing being conducted.

Sample analysis is performed by RTCA and results are included in *Appendix H*.

5.3 Airborne Radon Quality Assurance Procedure

EPA strongly recommends that quality assurance measurements are included in radon measurement studies. Quality assurance measurements include side-by-side canisters (duplicates), and unexposed control canisters (blanks).

Duplicates are pairs of canisters deployed in the same location, side by side, for the same measurement period. Duplicates are placed in at least ten percent of all sampling locations. These duplicate canisters are stored, deployed, removed, and shipped to the laboratory for analysis in the same manner as the other canisters. If either or both of the analyses in a duplicate pairing is above the EPA standard of 4.0 pCi/L the relative percent difference (RPD) between the two tests must be determined. If the allowable difference is exceeded, the test is determined to be invalid and a new duplicate test must be run. If both canister results are below the EPA standard then the RPD is not calculated since, despite any disparity, both results are below the EPA standard.

Blanks are utilized to determine whether the manufacturing, shipping, storage, and processing of the canisters has affected the accuracy of airborne radon sampling procedures. Blanks are unopened, unexposed canisters which are set out with and shipped with the exposed canisters so that the processing laboratory treats them equally. The number of blanks is at least five percent of the number of canisters deployed up to a maximum of 25 canisters.

5.4 Airborne Radon Analytical Results

Three canisters, including one duplicate and one blank, were placed inside the residence during the sampling period that occurred between April 9, 2014, and April 11, 2014. The concentration of radon in the sample and associated duplicate sample ranged from 0.1 pCi/L to 0.2 pCi/L. The EPA threshold for radon is 4.0 pCi/L.

In *Table 6,* the location and result of the quality control duplicate test is listed below.

Table 6
Duplicate Sample Result

Location	Canister Numbers	Radon Concentration (pCi/Liter)			Relative Percent Difference (RPD, %)
		Sample	Sample Duplicate	Sample Average	
Living Room	2304781 2304811	0.2	0.1	0.15	Percent Difference Not Needed (No Concentrations Above 4.0 pCi/Liter)

Note Duplicate testing result was satisfactory.

In *Table 7,* the location and result of the quality control blank test is listed below.

Table 7
Blank Sample Result

Location	Canister Numbers	Radon Concentration (pCi/Liter)
Living room	2302456	0.1

Note Blank testing result was satisfactory.

5.5 Conclusion

During the course of the airborne radon measurement assessment, three sampling canisters, including one duplicate and one blank, were placed in the residence. The samples were below EPA recommended action guideline of 4.0 pCi/L.

Report prepared by Environmental Analyst Eduardo Miguel Marques.

Reviewed by:

Kevin McCarthy
Project Manager

Robert L. May, Jr.
President
NEHA NRPP # 105366 RT

Appendix A

Fuss &O'Neill EnviroScience Certifications

Dear Licensed/Certified Professional,

Attached you will find your validated license/certification for the coming year. Should you have any questions about your license/certificate renewal, please do not hesitate to write or call.

Department of Public Health (860) 509-7603
P.O. Box 340308
M.S. # 12HSR
http://www.dph.state.ct.us
Hartford, CT 06134-0308

Sincerely,

JEWEL MULLEN, MD, MPH, MPA, COMMISSIONER
DEPARTMENT OF PUBLIC HEALTH

0001766 FP **PRSRT T7 0 1264 08040
ULKENS AUGUSTE
146 HARTFORD RD
C/O FUSS & O'NEIL ENVIRO SCIENCE
MANCHESTER CT 06040-5992

INSTRUCTIONS:

1. Detach and sign each of the cards on this form.
2. Display the large card in a prominent place in your office or place of business.
3. The wallet card is for you to carry on your person. If you do not wish to carry the wallet card, place it in a secure place.
4. The employer's copy is for persons who must demonstrate current licensure/certification in order to retain employment or privileges. The employer's card is to be presented to the employer and kept by them as a part of your personnel file. Only one copy of this card can be supplied to you.

STATE OF CONNECTICUT
DEPARTMENT OF PUBLIC HEALTH
PURSUANT TO THE PROVISIONS OF THE GENERAL STATUTES OF CONNECTICUT
THE INDIVIDUAL NAMED HEREIN IS CERTIFIED
BY THIS DEPARTMENT AS A
LEAD INSPECTOR RISK ASSESSOR

CERTIFICATION NO. D02234
CURRENT THROUGH 09/30/14
VALIDATION NO. 03-637409

ULKENS AUGUSTE

SIGNATURE JEWEL MULLEN, MD, MPH, MPA, COMMISSIONER

EMPLOYER'S COPY
STATE OF CONNECTICUT
DEPARTMENT OF PUBLIC HEALTH
NAME
ULKENS AUGUSTE

VALIDATION NO.	CERTIFICATION NO.	CURRENT THROUGH
03-637409	D02234	09/30/14

PROFESSION
LEAD INSPECTOR RISK ASSESSOR

SIGNATURE JEWEL MULLEN, MD, MPH, MPA, COMMISSIONER

WALLET CARD
STATE OF CONNECTICUT
DEPARTMENT OF PUBLIC HEALTH
NAME
ULKENS AUGUSTE

VALIDATION NO.	CERTIFICATION NO.	CURRENT THROUGH
03-637409	D02234	09/30/14

PROFESSION
LEAD INSPECTOR RISK ASSESSOR

SIGNATURE JEWEL MULLEN, MD, MPH, MPA, COMMISSIONER

Fuss & O'Neill EnviroScience, LLC

146 Hartford Road, Manchester, CT 06040 – (860) 646-2469

This is to certify that

Ulkens Auguste

xxx-xx-6277

has successfully completed the

8 Hour Lead Inspector Risk Assessor Refresher Course

(Approved per Sec. 20-477, CT General Statutes)

Under civil and criminal penalties of law for the making or submission of false or fraudulent statements or representations (U.S.C. 1001 and 15 U.S.C. 2615), I certify that this training complies with all applicable requirements of Title IV of TSCA, 40 CFR part 745 and any other applicable Federal, State, or local requirements.

Brian Santos, Principal Instructor

Robert L. May, Jr., Training Manager

February 20 & 25, 2014

Date of Course

LIRA-R-02/14-1

Certificate Number

February 25, 2014

Examination Date

February 25, 2015

Expiration Date

Dear Licensed/Certified Professional,

Attached you will find your validated license/certification for the coming year. Should you have any questions about your license/certificate renewal, please do not hesitate to write or call:

Department of Public Health **(860) 509-7603**
P.O. Box 340308
M.S.#12MQA **http://www.dph.state.ct.us**
Hartford, CT 06134-0308

Sincerely,

JEWEL MULLEN, MD, MPH, MPA, COMMISSIONER
DEPARTMENT OF PUBLIC HEALTH

0001729 FP **PRSRT T7 0 0664 06040
EDUARDO M. MARQUES
FUSS & ONEILL ENVIRO SCIENCE LLC
146 HARTFORD ROAD
MANCHESTER CT 06040

INSTRUCTIONS:

1. Detach and sign each of the cards on this form.
2. Display the large card in a prominent place at your office or place of business.
3. The wallet card is for you to carry on your person. If you do not have a wallet card, place it in a safe place.
4. The employer's copy is for persons who must demonstrate current licensure/certification in order to retain employment or privileges. The employer's card is to be presented to the employer and kept by them as a part of your personnel file. Only one copy of this card can be supplied to you.

STATE OF CONNECTICUT
DEPARTMENT OF PUBLIC HEALTH
PURSUANT TO THE PROVISIONS OF THE GENERAL STATUTES OF CONNECTICUT
THE INDIVIDUAL NAMED BELOW IS LICENSED
BY THIS DEPARTMENT AS A

ASBESTOS CONSULTANT-INSP/MGMT PLANNER

LICENSE NO.
000201
CURRENT THROUGH
02/28/15
VALIDATION NO.
03-720789

EDUARDO M. MARQUES

SIGNATURE COMMISSIONER

EMPLOYER'S COPY

STATE OF CONNECTICUT
DEPARTMENT OF PUBLIC HEALTH

NAME
EDUARDO M. MARQUES

VALIDATION NO	LICENSE NO.	CURRENT THROUGH
03-720789	000201	02/28/15

PROFESSION
ASBESTOS CONSULTANT-INSP/MGMT PLANNER

SIGNATURE COMMISSIONER

WALLET CARD

STATE OF CONNECTICUT
DEPARTMENT OF PUBLIC HEALTH

NAME
EDUARDO M. MARQUES

VALIDATION NO	LICENSE NO.	CURRENT THROUGH
03-720789	000201	02/28/15

PROFESSION
ASBESTOS CONSULTANT-INSP/MGMT PLANNER

SIGNATURE COMMISSIONER

Fuss & O'Neill EnviroScience, LLC

146 Hartford Road, Manchester, CT 06040 – (860) 646-2469

This is to certify that

Eduardo Miguel Marques

xxx-xx-8045

has successfully completed the

4 Hr. Asbestos Inspector Refresher

Asbestos Accreditation under TSCA Title II

40 CFR Part 763

John Rowinski, Principal Instructor

Robert L. May, Jr., Training Manager

September 4, 2013

Date of Course

AI-R-09/13-9

Certificate Number

September 4, 2013; A

Examination Date & Grade

September 4, 2014

Expiration Date

0001728 FP **PRSRT T7 0 0664 06040
EDUARDO M. MARQUES
FUSS & ONEILL ENVIRO SCIENCE LLC
146 HARTFORD ROAD
MANCHESTER CT 06040

Dear Licensed/Certified Professional,

Attached you will find your validated license/certification for the coming year. Should you have any questions about your license/certificate renewal, please do not hesitate to write or call:

Department of Public Health **(860) 509-7603**
P.O. Box 340308
M.S.#12MQA **http://www.dph.state.ct.us**
Hartford, CT 06134-0308

Sincerely,

JEWEL MULLEN, MD, MPH, MPA, COMMISSIONER
DEPARTMENT OF PUBLIC HEALTH

INSTRUCTIONS:

1. Detach and size each of the cards on this form.
2. Display the large card in a prominent place in your office or place of business.
3. The wallet card is for your personal use. It can be used in place of the wallet card, place of the employer copy.
4. The employer's copy is for persons who must demonstrate current license/certification in order to retain employment or privileges. The employer's card is to be presented to his employer and sent by them as a part of your personnel file. Extra copies of this card can be supplied to you.

STATE OF CONNECTICUT
DEPARTMENT OF PUBLIC HEALTH
PURSUANT TO THE PROVISIONS OF THE GENERAL STATUTES OF CONNECTICUT
THE INDIVIDUAL NAMED BELOW IS CERTIFIED
BY THIS DEPARTMENT AS A

LEAD INSPECTOR

CERTIFICATION NO.
002132
CURRENT THROUGH
02/28/15
VALIDATION NO.
03-720788

EDUARDO M. MARQUES

SIGNATURE COMMISSIONER

EMPLOYER'S COPY

STATE OF CONNECTICUT
DEPARTMENT OF PUBLIC HEALTH
NAME
EDUARDO M. MARQUES

VALIDATION NO	CERTIFICATION NO.	CURRENT THROUGH
03-720788	002132	02/28/15

PROFESSION
LEAD INSPECTOR

SIGNATURE COMMISSIONER

WALLET CARD

STATE OF CONNECTICUT
DEPARTMENT OF PUBLIC HEALTH
NAME
EDUARDO M. MARQUES

VALIDATION NO	CERTIFICATION NO.	CURRENT THROUGH
03-720788	002132	02/28/15

PROFESSION
LEAD INSPECTOR

SIGNATURE COMMISSIONER

Fuss & O'Neill EnviroScience, LLC

146 Hartford Road, Manchester, CT 06040 – (860) 646-2469

This is to certify that

Eduardo Miguel Marques

xxx-xx-8045

has successfully completed the

8 Hour Lead Inspector Refresher Course

(Approved per Sec. 20-477, CT General Statutes)

Under civil and criminal penalties of law for the making or submission of false or fraudulent statements or representations (U.S.C. 1001 and 15 U.S.C. 2615), I certify that this training complies with all applicable requirements of Title IV of TSCA, 40 CFR part 745 and any other applicable Federal, State, or local requirements.

Brian Santos, Principal Instructor

Robert L. May, Jr., Training Manager

February 20 & 24, 2014

Date of Course

LI-R-02/14-1

Certificate Number

February 24, 2014

Examination Date

February 24, 2015

Expiration Date

Appendix C

Asbestos Sample Results and Chain of Custody

FUSS & O'NEILL
EnviroScience, LLC

146 Hartford Road, Manchester, CT 06040

www.fando.com

Phone (860)646-2469 Fax (860) 649-6883

041409779

SAMPLE LOG FOR ASBESTOS BULKS

Project Name: Lathrop Associates

Project No. 20140370.A1E

Building: 19 Stevens Street, East Haven, CT

Project Manager: KM

Sample ID	Sample Location	Material	Result (%)
040914EMM-17A-B	Exterior siding	Transite siding	15%
040914EMM-18A-B	Exterior	Fiberboard behind transite	ND
040914EMM-19A-B	Exterior	Foundation mortar	
040914EMM-20A-B	Roof	Bottom layer shingle	
040914EMM-21A-B	Roof	Top layer shingle	
040914EMM-22A-B	Roof	flashing	8%
040914EMM-23A-B	Rear flat roof	Rolled sheet roof	ND
040914EMM-24A-B	Rear flat roof	Vapor barrier under sheet roof	
040914EMM-25A-B	Interior	Paper backing to fiberglass wall insulation	
040914EMM-26A-C	Kitchen	Textured ceiling – type I	
040914EMM-27A-C	Foyer	Textured ceiling – type II	
040914EMM-28A-C	Room 5	Textured ceiling – type III	
040914EMM-29A-B	Room 4	1x1 ceiling tile	
040914EMM-30A-B	Room 5	Glue daubs associated with ceiling tile	
040914EMM-31	Kitchen	Sink undercoating	6%

Analysis Method: ☒ PLM ☐ Other

Turnaround Time: 24 hour

Based on the turnaround time indicated above, analyses are due to EnviroScience on or before this date: _____. Please call the EnviroScience Laboratory if analyses will be late at (860) 646-2469.

Fax Results to the EnviroScience Laboratory at: 888-838-1160.

Special Instructions: Stop analysis on first positive sample in each homogeneous set of samples unless otherwise noted. Do not layer samples unless indicated. EPA 400 Point Count all samples of content <4%, positive stop on all point counts.

Samples collected by: _____ **Date:** 4-9-14 **Time:** _____

Samples [Rec'd][Sent by] [ ][ ] **Date:** [ ][ ] **Time:** _____

Samples Received by: CS EFX **Date:** 4/12/14 **Time:** 1000

Shipped To: ☒ EMSL State: NJ ☐ Other _____

Method of Shipment: ☒ Fed Ex ☐ Other _____

2014 APR 10 A 9:16
CMNA HEALTH DIST. NJ

★79

FUSS & O'NEILL
EnviroScience, LLC

146 Hartford Road, Manchester, CT 06040

www.fando.com

Phone (860)646-2469 Fax (860) 649-6883

041409779

SAMPLE LOG FOR ASBESTOS BULKS

Project Name: Lathrop Associates

Project No. 20140370.A1E

Building: 19 Stevens Street, East Haven, CT

Project Manager: KM

Sample ID	Sample Location	Material	Result (%)
040914EMM-32A-B	Crawlspace	Paper backing to fiberglass insulation	ND
040914EMM-33A-B	Room 2 – bath	Sink caulk	
040914EMM-34A-B	Room 2 – bath	Shower panel adhesive	
040914EMM-35A-B	Room 2 – bath	Shower panel caulk	
040914EMM-36A-B	Room 1 – kitchen	Backing/adhesive associated with formica	
040914EMM-37A-C	Windows (foyer, C side, D side)	Exterior window glazing compound	
040914EMM-38A-B	Foyer	Sheet floor/backing	ND / 40%
040914EMM-39A-B	Foyer	Yellow adhesive associated with sheet floor	NV
040914EMM-40A-B	Rm. 1 / corridor	Faux wood floor tile	1 / 5%
040914EMM-41A-B	Rm. 1 / corridor	Brown mastic associated with faux wood floor tile	ND
040914EMM-42A-B	Rm. 4 – top layer	Faux wood floor tile – type II	
040914EMM-43A-B	Rm. 4 – top layer	Clear mastic associated with faux wood floor tile	
040914EMM-44A-B	Rm. 2 – bath	Self-adh. faux wood floor	
040914EMM-45A-B	Rm. 3	Yellow sheet floor/backing (patch)	30%
040914EMM-46A-B	Rm. 3	Top layer self-adh. flooring	

2014 APR 12 A 9:46

Analysis Method: ☒ PLM ☐ Other

Turnaround Time: 24 hour

Based on the turnaround time indicated above, analyses are due to EnviroScience on or before this date: _____. Please call the EnviroScience Laboratory if analyses will be late at (860) 646-2469.

Fax Results to the EnviroScience Laboratory at: 888-838-1160.

Special Instructions: Stop analysis on first positive sample in each homogeneous set of samples unless otherwise noted. Do not layer samples unless indicated. EPA 400 Point Count all samples of content <4%, positive stop on all point counts.

Samples collected by: _____ **Date:** 4-9-14 **Time:** _____

Samples [Rec'd][Sent by] [_____][_____] **Date:** [_____][_____] **Time:** _____

Samples Received by: _____ **Date:** _____ **Time:** _____

Shipped To: ☒ EMSL State: NJ ☐ Other _____

Method of Shipment: ☒ Fed Ex ☐ Other _____

FUSS & O'NEILL
EnviroScience, LLC

146 Hartford Road, Manchester, CT 06040

www.fando.com

Phone (860)646-2469 Fax (860) 649-6883

041409779

SAMPLE LOG FOR ASBESTOS BULKS

Project Name: Lathrop Associates

Project No. 20140370.A1E

Building: 19 Stevens Street, East Haven, CT

Project Manager: KM

Sample ID	Sample Location	Material	Result (%)
040914EMM-47A-B	Rm. 3	Bottom layer beige sheet flooring/backing	ND
040914EMM-48A-B	Kitchen	Bottom layer tan yellow floor	
040914EMM-49A-B	Kitchen	Bottom layer mastic	
040914EMM-50A-B	Kitchen	Top layer floor tile	
040914EMM-51A-B	Kitchen	Top layer floor tile mastic	—
040914EMM-52A-C	Wall, wall, ceiling	Sheetrock/joint compound (composite)	0.5%
040914EMM-53A-C	Wall, wall, ceiling	Joint compound	ND

RECEIVED
CINNAMINSON, N.J.
2014 APR 12 A 10:46

Analysis Method: ☒ PLM ☐ Other

Turnaround Time: 24 hour

Based on the turnaround time indicated above, analyses are due to EnviroScience on or before this date: _____. Please call the EnviroScience Laboratory if analyses will be late at (860) 646-2469.

Fax Results to the EnviroScience Laboratory at: 888-838-1160.

Special Instructions: Stop analysis on first positive sample in each homogeneous set of samples unless otherwise noted. Do not layer samples unless indicated. EPA 400 Point Count all samples of content <4%, positive stop on all point counts.

Samples collected by: _____ **Date:** 4-9-14 **Time:** _____

Samples [Rec'd][Sent by] [_____][_____] **Date:** [_____][_____] **Time:** _____

Samples Received by: _____ **Date:** _____ **Time:** _____

Shipped To: ☒ EMSL State: NJ ☐ Other _____

Method of Shipment: ☒ Fed Ex ☐ Other _____

EMSL Analytical, Inc.
200 Route 130 North Cinnaminson, NJ 08077
Phone/Fax: (800) 220-3675 / (856) 786-5974
http://www.EMSL.com / cinnasblab@EMSL.com

EMSL Order ID: 041409779
Customer ID: ENVI54
Customer PO:
Project ID:

Attn: Kevin McCarthy
Fuss & O'Neill EnviroScience, LLC
146 Hartford Road
Manchester, CT 06040

Phone: (860) 646-2469
Fax: (888) 838-1160
Collected: 4/ 9/2014
Received: 4/12/2014
Analyzed: 4/14/2014

Proj: 20140370.A1E / Lathrop Associates / 19 Stevens Street, East Haven, CT

Summary Test Report for Asbestos Analysis of Bulk Material via EPA 600/R-93/116 Method via Polarized Light Microscopy

Client Sample ID: 040914EMM-17A ***Lab Sample ID:*** 041409779-0001
Sample Description: Exterior siding/Transite Siding

TEST	Analyzed Date	Color	Non-Asbestos Fibrous	Non-Asbestos Non-Fibrous	Asbestos	Comment
PLM	4/14/2014	Gray	0%	85%	15% Chrysotile	

Client Sample ID: 040914EMM-17B ***Lab Sample ID:*** 041409779-0002
Sample Description: Exterior siding/Transite Siding

TEST	Analyzed Date	Color	Non-Asbestos Fibrous	Non-Asbestos Non-Fibrous	Asbestos	Comment
PLM	4/14/2014				Stop Positive (Not Analyzed)	

Client Sample ID: 040914EMM-18A ***Lab Sample ID:*** 041409779-0003
Sample Description: Exterior/Fiberboard behind Transite

TEST	Analyzed Date	Color	Non-Asbestos Fibrous	Non-Asbestos Non-Fibrous	Asbestos	Comment
PLM	4/14/2014	Brown	90%	10%	None Detected	

Client Sample ID: 040914EMM-18B ***Lab Sample ID:*** 041409779-0004
Sample Description: Exterior/Fiberboard behind Transite

TEST	Analyzed Date	Color	Non-Asbestos Fibrous	Non-Asbestos Non-Fibrous	Asbestos	Comment
PLM	4/14/2014	Brown	90%	10%	None Detected	

Client Sample ID: 040914EMM-19A ***Lab Sample ID:*** 041409779-0005
Sample Description: Exterior/Foundation Mortar

TEST	Analyzed Date	Color	Non-Asbestos Fibrous	Non-Asbestos Non-Fibrous	Asbestos	Comment
PLM	4/14/2014	Gray	0%	100%	None Detected	

Client Sample ID: 040914EMM-19B ***Lab Sample ID:*** 041409779-0006
Sample Description: Exterior/Foundation Mortar

TEST	Analyzed Date	Color	Non-Asbestos Fibrous	Non-Asbestos Non-Fibrous	Asbestos	Comment
PLM	4/14/2014	Gray	0%	100%	None Detected	

Client Sample ID: 040914EMM-20A ***Lab Sample ID:*** 041409779-0007
Sample Description: Roof/Bottom Layer Shingle

TEST	Analyzed Date	Color	Non-Asbestos Fibrous	Non-Asbestos Non-Fibrous	Asbestos	Comment
PLM	4/14/2014	Red/Black	30%	70%	None Detected	

EMSL Analytical, Inc.
200 Route 130 North Cinnaminson, NJ 08077
Phone/Fax: (800) 220-3675 / (856) 786-5974
http://www.EMSL.com / cinnasblab@EMSL.com

EMSL Order ID: 041409779
Customer ID: ENVI54
Customer PO:
Project ID:

Summary Test Report for Asbestos Analysis of Bulk Material via EPA 600/R-93/116 Method via Polarized Light Microscopy

Client Sample ID: 040914EMM-20B ***Lab Sample ID:*** **041409779-0008**
Sample Description: Roof/Bottom Layer Shingle

TEST	Analyzed Date	Color	Non-Asbestos Fibrous	Non-Asbestos Non-Fibrous	Asbestos	Comment
PLM	4/14/2014	Red/Black	20%	80%	None Detected	

Client Sample ID: 040914EMM-21A ***Lab Sample ID:*** **041409779-0009**
Sample Description: Roof/Top Layer Shingle

TEST	Analyzed Date	Color	Non-Asbestos Fibrous	Non-Asbestos Non-Fibrous	Asbestos	Comment
PLM	4/14/2014	White/Black	30%	70%	None Detected	

Client Sample ID: 040914EMM-21B ***Lab Sample ID:*** **041409779-0010**
Sample Description: Roof/Top Layer Shingle

TEST	Analyzed Date	Color	Non-Asbestos Fibrous	Non-Asbestos Non-Fibrous	Asbestos	Comment
PLM	4/14/2014	White/Black/Green	20%	80%	None Detected	

Client Sample ID: 040914EMM-22A ***Lab Sample ID:*** **041409779-0011**
Sample Description: Roof/Flashing

TEST	Analyzed Date	Color	Non-Asbestos Fibrous	Non-Asbestos Non-Fibrous	Asbestos	Comment
PLM	4/14/2014	Black	0%	92%	8% Chrysotile	

Client Sample ID: 040914EMM-22B ***Lab Sample ID:*** **041409779-0012**
Sample Description: Roof/Flashing

TEST	Analyzed Date	Color	Non-Asbestos Fibrous	Non-Asbestos Non-Fibrous	Asbestos	Comment
PLM	4/14/2014				Stop Positive (Not Analyzed)	

Client Sample ID: 040914EMM-23A ***Lab Sample ID:*** **041409779-0013**
Sample Description: Rear flat roof/Rolled Sheet Roof

TEST	Analyzed Date	Color	Non-Asbestos Fibrous	Non-Asbestos Non-Fibrous	Asbestos	Comment
PLM	4/14/2014	White/Black	30%	70%	None Detected	

Client Sample ID: 040914EMM-23B ***Lab Sample ID:*** **041409779-0014**
Sample Description: Rear flat roof/Rolled Sheet Roof

TEST	Analyzed Date	Color	Non-Asbestos Fibrous	Non-Asbestos Non-Fibrous	Asbestos	Comment
PLM	4/14/2014	White/Black	20%	80%	None Detected	

Client Sample ID: 040914EMM-24A ***Lab Sample ID:*** **041409779-0015**
Sample Description: Rear flat roof/Vapor Barrier under Sheet Roof

TEST	Analyzed Date	Color	Non-Asbestos Fibrous	Non-Asbestos Non-Fibrous	Asbestos	Comment
PLM	4/14/2014	Black	60%	40%	None Detected	

EMSL Analytical, Inc.
200 Route 130 North Cinnaminson, NJ 08077
Phone/Fax: (800) 220-3675 / (856) 786-5974
http://www.EMSL.com / cinnasblab@EMSL.com

EMSL Order ID:	041409779
Customer ID:	ENVI54
Customer PO:	
Project ID:	

Summary Test Report for Asbestos Analysis of Bulk Material via EPA 600/R-93/116 Method via Polarized Light Microscopy

Client Sample ID: 040914EMM-24B ***Lab Sample ID:*** 041409779-0016
Sample Description: Rear flat roof/Vapor Barrier under Sheet Roof

TEST	Analyzed Date	Color	Non-Asbestos Fibrous	Non-Asbestos Non-Fibrous	Asbestos	Comment
PLM	4/14/2014	Black	50%	50%	None Detected	

Client Sample ID: 040914EMM-25A ***Lab Sample ID:*** 041409779-0017
Sample Description: Interior/Paper Backing to Fiberglass Wall Insulation

TEST	Analyzed Date	Color	Non-Asbestos Fibrous	Non-Asbestos Non-Fibrous	Asbestos	Comment
PLM	4/14/2014	White/Silver	75%	25%	None Detected	

Client Sample ID: 040914EMM-25B ***Lab Sample ID:*** 041409779-0018
Sample Description: Interior/Paper Backing to Fiberglass Wall Insulation

TEST	Analyzed Date	Color	Non-Asbestos Fibrous	Non-Asbestos Non-Fibrous	Asbestos	Comment
PLM	4/14/2014	Brown/Black/Silver	75%	25%	None Detected	

Client Sample ID: 040914EMM-26A ***Lab Sample ID:*** 041409779-0019
Sample Description: Kitchen/Textured Ceiling-Type I

TEST	Analyzed Date	Color	Non-Asbestos Fibrous	Non-Asbestos Non-Fibrous	Asbestos	Comment
PLM	4/14/2014	White	0%	100%	None Detected	

Client Sample ID: 040914EMM-26B ***Lab Sample ID:*** 041409779-0020
Sample Description: Kitchen/Textured Ceiling-Type I

TEST	Analyzed Date	Color	Non-Asbestos Fibrous	Non-Asbestos Non-Fibrous	Asbestos	Comment
PLM	4/14/2014	White	0%	100%	None Detected	

Client Sample ID: 040914EMM-26C ***Lab Sample ID:*** 041409779-0021
Sample Description: Kitchen/Textured Ceiling-Type I

TEST	Analyzed Date	Color	Non-Asbestos Fibrous	Non-Asbestos Non-Fibrous	Asbestos	Comment
PLM	4/14/2014	White	0%	100%	None Detected	

Client Sample ID: 040914EMM-27A ***Lab Sample ID:*** 041409779-0022
Sample Description: Foyer/Textured Ceiling-Type II

TEST	Analyzed Date	Color	Non-Asbestos Fibrous	Non-Asbestos Non-Fibrous	Asbestos	Comment
PLM	4/14/2014	White	0%	100%	None Detected	

Client Sample ID: 040914EMM-27B ***Lab Sample ID:*** 041409779-0023
Sample Description: Foyer/Textured Ceiling-Type II

TEST	Analyzed Date	Color	Non-Asbestos Fibrous	Non-Asbestos Non-Fibrous	Asbestos	Comment
PLM	4/14/2014	White	0%	100%	None Detected	

EMSL Analytical, Inc.
200 Route 130 North Cinnaminson, NJ 08077
Phone/Fax: (800) 220-3675 / (856) 786-5974
http://www.EMSL.com / cinnasblab@EMSL.com

EMSL Order ID: 041409779
Customer ID: ENVI54
Customer PO:
Project ID:

Summary Test Report for Asbestos Analysis of Bulk Material via EPA 600/R-93/116 Method via Polarized Light Microscopy

Client Sample ID: 040914EMM-27C ***Lab Sample ID:*** 041409779-0024
Sample Description: Foyer/Textured Ceiling-Type II

TEST	Analyzed Date	Color	Non-Asbestos Fibrous	Non-Asbestos Non-Fibrous	Asbestos	Comment
PLM	4/14/2014	White	0%	100%	None Detected	

Client Sample ID: 040914EMM-28A ***Lab Sample ID:*** 041409779-0025
Sample Description: Room 5/Textured Ceiling-Type III

TEST	Analyzed Date	Color	Non-Asbestos Fibrous	Non-Asbestos Non-Fibrous	Asbestos	Comment
PLM	4/14/2014	White	0%	100%	None Detected	

Client Sample ID: 040914EMM-28B ***Lab Sample ID:*** 041409779-0026
Sample Description: Room 5/Textured Ceiling-Type III

TEST	Analyzed Date	Color	Non-Asbestos Fibrous	Non-Asbestos Non-Fibrous	Asbestos	Comment
PLM	4/14/2014	White	0%	100%	None Detected	

Client Sample ID: 040914EMM-28C ***Lab Sample ID:*** 041409779-0027
Sample Description: Room 5/Textured Ceiling-Type III

TEST	Analyzed Date	Color	Non-Asbestos Fibrous	Non-Asbestos Non-Fibrous	Asbestos	Comment
PLM	4/14/2014	White	0%	100%	None Detected	

Client Sample ID: 040914EMM-29A ***Lab Sample ID:*** 041409779-0028
Sample Description: Room 4/1x1 Ceiling Tile

TEST	Analyzed Date	Color	Non-Asbestos Fibrous	Non-Asbestos Non-Fibrous	Asbestos	Comment
PLM	4/14/2014	Brown	90%	10%	None Detected	

Client Sample ID: 040914EMM-29B ***Lab Sample ID:*** 041409779-0029
Sample Description: Room 4/1x1 Ceiling Tile

TEST	Analyzed Date	Color	Non-Asbestos Fibrous	Non-Asbestos Non-Fibrous	Asbestos	Comment
PLM	4/14/2014	Brown/White	90%	10%	None Detected	

Client Sample ID: 040914EMM-30A ***Lab Sample ID:*** 041409779-0030
Sample Description: Room 5/Glue Daubs associated with Ceiling Tile

TEST	Analyzed Date	Color	Non-Asbestos Fibrous	Non-Asbestos Non-Fibrous	Asbestos	Comment
PLM	4/14/2014	Brown	0%	100%	None Detected	

Client Sample ID: 040914EMM-30B ***Lab Sample ID:*** 041409779-0031
Sample Description: Room 5/Glue Daubs associated with Ceiling Tile

TEST	Analyzed Date	Color	Non-Asbestos Fibrous	Non-Asbestos Non-Fibrous	Asbestos	Comment
PLM	4/14/2014	Brown/White	10%	90%	None Detected	

EMSL Analytical, Inc.
200 Route 130 North Cinnaminson, NJ 08077
Phone/Fax: (800) 220-3675 / (856) 786-5974
http://www.EMSL.com / cinnasblab@EMSL.com

EMSL Order ID: 041409779
Customer ID: ENVI54
Customer PO:
Project ID:

Summary Test Report for Asbestos Analysis of Bulk Material via EPA 600/R-93/116 Method via Polarized Light Microscopy

Client Sample ID: 040914EMM-31 ***Lab Sample ID:*** 041409779-0032
Sample Description: Kitchen/Sink Undercoating

TEST	Analyzed Date	Color	Non-Asbestos Fibrous	Non-Asbestos Non-Fibrous	Asbestos	Comment
PLM	4/14/2014	White	0%	94%	6% Chrysotile	

Client Sample ID: 040914EMM-32A ***Lab Sample ID:*** 041409779-0033
Sample Description: Crawlspace/Paper Backing to Fiberglass Insulation

TEST	Analyzed Date	Color	Non-Asbestos Fibrous	Non-Asbestos Non-Fibrous	Asbestos	Comment
PLM	4/14/2014	Black	70%	30%	None Detected	

Client Sample ID: 040914EMM-32B ***Lab Sample ID:*** 041409779-0034
Sample Description: Crawlspace/Paper Backing to Fiberglass Insulation

TEST	Analyzed Date	Color	Non-Asbestos Fibrous	Non-Asbestos Non-Fibrous	Asbestos	Comment
PLM	4/14/2014	Black	80%	20%	None Detected	

Client Sample ID: 040914EMM-33A ***Lab Sample ID:*** 041409779-0035
Sample Description: Room 2-bath/Sink Caulk

TEST	Analyzed Date	Color	Non-Asbestos Fibrous	Non-Asbestos Non-Fibrous	Asbestos	Comment
PLM	4/14/2014	White	0%	100%	None Detected	

Client Sample ID: 040914EMM-33B ***Lab Sample ID:*** 041409779-0036
Sample Description: Room 2-bath/Sink Caulk

TEST	Analyzed Date	Color	Non-Asbestos Fibrous	Non-Asbestos Non-Fibrous	Asbestos	Comment
PLM	4/14/2014	White	0%	100%	None Detected	

Client Sample ID: 040914EMM-34A ***Lab Sample ID:*** 041409779-0037
Sample Description: Room 2-bath/Shower Panel Adhesive

TEST	Analyzed Date	Color	Non-Asbestos Fibrous	Non-Asbestos Non-Fibrous	Asbestos	Comment
PLM	4/14/2014	White	0%	100%	None Detected	

Client Sample ID: 040914EMM-34B ***Lab Sample ID:*** 041409779-0038
Sample Description: Room 2-bath/Shower Panel Adhesive

TEST	Analyzed Date	Color	Non-Asbestos Fibrous	Non-Asbestos Non-Fibrous	Asbestos	Comment
PLM	4/14/2014	Tan/White	0%	100%	None Detected	

Client Sample ID: 040914EMM-35A ***Lab Sample ID:*** 041409779-0039
Sample Description: Room 2-bath/Shower Panel Caulk

TEST	Analyzed Date	Color	Non-Asbestos Fibrous	Non-Asbestos Non-Fibrous	Asbestos	Comment
PLM	4/14/2014	White	0%	100%	None Detected	

EMSL Analytical, Inc.
200 Route 130 North Cinnaminson, NJ 08077
Phone/Fax: (800) 220-3675 / (856) 786-5974
http://www.EMSL.com / cinnasblab@EMSL.com

EMSL Order ID: 041409779
Customer ID: ENVI54
Customer PO:
Project ID:

Summary Test Report for Asbestos Analysis of Bulk Material via EPA 600/R-93/116 Method via Polarized Light Microscopy

Client Sample ID: 040914EMM-35B ***Lab Sample ID:*** 041409779-0040
Sample Description: Room 2-bath/Shower Panel Caulk

TEST	Analyzed Date	Color	Non-Asbestos Fibrous	Non-Asbestos Non-Fibrous	Asbestos	Comment
PLM	4/14/2014	White	0%	100%	None Detected	

Client Sample ID: 040914EMM-36A-Backing ***Lab Sample ID:*** 041409779-0041
Sample Description: Room 1-kitchen/Backing / Adhesive associated with Formica

TEST	Analyzed Date	Color	Non-Asbestos Fibrous	Non-Asbestos Non-Fibrous	Asbestos	Comment
PLM	4/14/2014	Brown	20%	80%	None Detected	

Client Sample ID: 040914EMM-36A-Adhesive ***Lab Sample ID:*** 041409779-0041A
Sample Description: Room 1-kitchen/Backing / Adhesive associated with Formica

TEST	Analyzed Date	Color	Non-Asbestos Fibrous	Non-Asbestos Non-Fibrous	Asbestos	Comment
PLM	4/14/2014	Yellow	0%	100%	None Detected	

Client Sample ID: 040914EMM-36B-Backing ***Lab Sample ID:*** 041409779-0042
Sample Description: Room 1-kitchen/Backing / Adhesive associated with Formica

TEST	Analyzed Date	Color	Non-Asbestos Fibrous	Non-Asbestos Non-Fibrous	Asbestos	Comment
PLM	4/14/2014	Brown/White	40%	60%	None Detected	

Client Sample ID: 040914EMM-36B-Adhesive ***Lab Sample ID:*** 041409779-0042A
Sample Description: Room 1-kitchen/Backing / Adhesive associated with Formica

TEST	Analyzed Date	Color	Non-Asbestos Fibrous	Non-Asbestos Non-Fibrous	Asbestos	Comment
PLM	4/14/2014	Brown	0%	100%	None Detected	

Client Sample ID: 040914EMM-37A ***Lab Sample ID:*** 041409779-0043
Sample Description: Windows-foyer/Exterior Window Glazing Compound

TEST	Analyzed Date	Color	Non-Asbestos Fibrous	Non-Asbestos Non-Fibrous	Asbestos	Comment
PLM	4/14/2014	Gray	0%	100%	None Detected	

Client Sample ID: 040914EMM-37B ***Lab Sample ID:*** 041409779-0044
Sample Description: Windows-C side/Exterior Window Glazing Compound

TEST	Analyzed Date	Color	Non-Asbestos Fibrous	Non-Asbestos Non-Fibrous	Asbestos	Comment
PLM	4/14/2014	Gray	0%	100%	None Detected	

Client Sample ID: 040914EMM-37C ***Lab Sample ID:*** 041409779-0045
Sample Description: Windows-D side/Exterior Window Glazing Compound

TEST	Analyzed Date	Color	Non-Asbestos Fibrous	Non-Asbestos Non-Fibrous	Asbestos	Comment
PLM	4/14/2014		0%	100%	None Detected	

EMSL Analytical, Inc.
200 Route 130 North Cinnaminson, NJ 08077
Phone/Fax: (800) 220-3675 / (856) 786-5974
http://www.EMSL.com / cinnasblab@EMSL.com

EMSL Order ID: 041409779
Customer ID: ENVI54
Customer PO:
Project ID:

Summary Test Report for Asbestos Analysis of Bulk Material via EPA 600/R-93/116 Method via Polarized Light Microscopy

Client Sample ID: 040914EMM-38A-Sheet Flooring ***Lab Sample ID:*** 041409779-0046
Sample Description: Foyer/Sheet Floor / Backing

TEST	Analyzed Date	Color	Non-Asbestos Fibrous	Non-Asbestos Non-Fibrous	Asbestos	Comment
PLM	4/14/2014	Brown/Red/Black	0%	100%	None Detected	

Client Sample ID: 040914EMM-38A-Backing ***Lab Sample ID:*** 041409779-0046A
Sample Description: Foyer/Sheet Floor / Backing

TEST	Analyzed Date	Color	Non-Asbestos Fibrous	Non-Asbestos Non-Fibrous	Asbestos	Comment
PLM	4/14/2014	Gray	15%	45%	40% Chrysotile	

Client Sample ID: 040914EMM-38B-Sheet Flooring ***Lab Sample ID:*** 041409779-0047
Sample Description: Foyer/Sheet Floor / Backing

TEST	Analyzed Date	Color	Non-Asbestos Fibrous	Non-Asbestos Non-Fibrous	Asbestos	Comment
PLM	4/14/2014	Various	0%	100%	None Detected	

Client Sample ID: 040914EMM-38B-Backing ***Lab Sample ID:*** 041409779-0047A
Sample Description: Foyer/Sheet Floor / Backing

TEST	Analyzed Date	Color	Non-Asbestos Fibrous	Non-Asbestos Non-Fibrous	Asbestos	Comment
PLM	4/14/2014				Stop Positive (Not Analyzed)	

Client Sample ID: 040914EMM-39A ***Lab Sample ID:*** 041409779-0048
Sample Description: Foyer/Yellow Adhesive associated with Sheet Floor

TEST	Analyzed Date	Color	Non-Asbestos Fibrous	Non-Asbestos Non-Fibrous	Asbestos	Comment
PLM	4/14/2014	Yellow	0%	100%	None Detected	

Client Sample ID: 040914EMM-39B ***Lab Sample ID:*** 041409779-0049
Sample Description: Foyer/Yellow Adhesive associated with Sheet Floor

TEST	Analyzed Date	Color	Non-Asbestos Fibrous	Non-Asbestos Non-Fibrous	Asbestos	Comment
PLM	4/14/2014	Brown	0%	100%	None Detected	

Client Sample ID: 040914EMM-40A ***Lab Sample ID:*** 041409779-0050
Sample Description: Rm 1 / corridor/Faux Wood Floor Tile

TEST	Analyzed Date	Color	Non-Asbestos Fibrous	Non-Asbestos Non-Fibrous	Asbestos	Comment
PLM	4/14/2014	Brown	0%	95%	5% Chrysotile	

Client Sample ID: 040914EMM-40B ***Lab Sample ID:*** 041409779-0051
Sample Description: Rm 1 / corridor/Faux Wood Floor Tile

TEST	Analyzed Date	Color	Non-Asbestos Fibrous	Non-Asbestos Non-Fibrous	Asbestos	Comment
PLM	4/14/2014				Stop Positive (Not Analyzed)	

EMSL Analytical, Inc.
200 Route 130 North Cinnaminson, NJ 08077
Phone/Fax: (800) 220-3675 / (856) 786-5974
http://www.EMSL.com / cinnasblab@EMSL.com

EMSL Order ID: 041409779
Customer ID: ENVI54
Customer PO:
Project ID:

Summary Test Report for Asbestos Analysis of Bulk Material via EPA 600/R-93/116 Method via Polarized Light Microscopy

Client Sample ID: 040914EMM-41A ***Lab Sample ID:*** 041409779-0052
Sample Description: Rm 1 / corridor/Brown Mastic associated with Faux Wood Floor Tile

TEST	Analyzed Date	Color	Non-Asbestos Fibrous	Non-Asbestos Non-Fibrous	Asbestos	Comment
PLM	4/14/2014	Brown	0%	100%	None Detected	

Client Sample ID: 040914EMM-41B ***Lab Sample ID:*** 041409779-0053
Sample Description: Rm 1 / corridor/Brown Mastic associated with Faux Wood Floor Tile

TEST	Analyzed Date	Color	Non-Asbestos Fibrous	Non-Asbestos Non-Fibrous	Asbestos	Comment
PLM	4/14/2014	Brown	0%	100%	None Detected	

Client Sample ID: 040914EMM-42A ***Lab Sample ID:*** 041409779-0054
Sample Description: Rm 4-top layer/Faux Wood Floor Tile-Type II

TEST	Analyzed Date	Color	Non-Asbestos Fibrous	Non-Asbestos Non-Fibrous	Asbestos	Comment
PLM	4/14/2014	Brown/Tan	0%	100%	None Detected	

Client Sample ID: 040914EMM-42B ***Lab Sample ID:*** 041409779-0055
Sample Description: Rm 4-top layer/Faux Wood Floor Tile-Type II

TEST	Analyzed Date	Color	Non-Asbestos Fibrous	Non-Asbestos Non-Fibrous	Asbestos	Comment
PLM	4/14/2014	Brown/White	0%	100%	None Detected	

Client Sample ID: 040914EMM-43A ***Lab Sample ID:*** 041409779-0056
Sample Description: Rm 4-top layer/Clear Mastic associated with Faux Wood Floor Tile

TEST	Analyzed Date	Color	Non-Asbestos Fibrous	Non-Asbestos Non-Fibrous	Asbestos	Comment
PLM	4/14/2014	Clear	0%	100%	None Detected	

Client Sample ID: 040914EMM-43B ***Lab Sample ID:*** 041409779-0057
Sample Description: Rm 4-top layer/Clear Mastic associated with Faux Wood Floor Tile

TEST	Analyzed Date	Color	Non-Asbestos Fibrous	Non-Asbestos Non-Fibrous	Asbestos	Comment
PLM	4/14/2014	Clear	0%	100%	None Detected	

Client Sample ID: 040914EMM-44A ***Lab Sample ID:*** 041409779-0058
Sample Description: Rm 2-bath/Self-adh Faux Wood Floor

TEST	Analyzed Date	Color	Non-Asbestos Fibrous	Non-Asbestos Non-Fibrous	Asbestos	Comment
PLM	4/14/2014	Brown/Black	0%	100%	None Detected	

Client Sample ID: 040914EMM-44B ***Lab Sample ID:*** 041409779-0059
Sample Description: Rm 2-bath/Self-adh Faux Wood Floor

TEST	Analyzed Date	Color	Non-Asbestos Fibrous	Non-Asbestos Non-Fibrous	Asbestos	Comment
PLM	4/14/2014	Brown/Black	0%	100%	None Detected	

EMSL Analytical, Inc.
200 Route 130 North Cinnaminson, NJ 08077
Phone/Fax: (800) 220-3675 / (856) 786-5974
http://www.EMSL.com / cinnasblab@EMSL.com

EMSL Order ID: 041409779
Customer ID: ENVI54
Customer PO:
Project ID:

Summary Test Report for Asbestos Analysis of Bulk Material via EPA 600/R-93/116 Method via Polarized Light Microscopy

Client Sample ID: 040914EMM-45A-Sheet Flooring ***Lab Sample ID:*** 041409779-0060
Sample Description: Rm 3/Yellow Sheet Floor / Backing (Patch)

TEST	Analyzed Date	Color	Non-Asbestos Fibrous	Non-Asbestos Non-Fibrous	Asbestos	Comment
PLM	4/14/2014	Yellow	0%	100%	None Detected	

Client Sample ID: 040914EMM-45A-Backing ***Lab Sample ID:*** 041409779-0060A
Sample Description: Rm 3/Yellow Sheet Floor / Backing (Patch)

TEST	Analyzed Date	Color	Non-Asbestos Fibrous	Non-Asbestos Non-Fibrous	Asbestos	Comment
PLM	4/14/2014	Gray	15%	55%	30% Chrysotile	

Client Sample ID: 040914EMM-45B-Sheet Flooring ***Lab Sample ID:*** 041409779-0061
Sample Description: Rm 3/Yellow Sheet Floor / Backing (Patch)

TEST	Analyzed Date	Color	Non-Asbestos Fibrous	Non-Asbestos Non-Fibrous	Asbestos	Comment
PLM	4/14/2014	Yellow	0%	100%	None Detected	

Client Sample ID: 040914EMM-45B-Backing ***Lab Sample ID:*** 041409779-0061A
Sample Description: Rm 3/Yellow Sheet Floor / Backing (Patch)

TEST	Analyzed Date	Color	Non-Asbestos Fibrous	Non-Asbestos Non-Fibrous	Asbestos	Comment
PLM	4/14/2014				Stop Positive (Not Analyzed)	

Client Sample ID: 040914EMM-46A ***Lab Sample ID:*** 041409779-0062
Sample Description: Rm 3/Top Layer Self-adh Flooring

TEST	Analyzed Date	Color	Non-Asbestos Fibrous	Non-Asbestos Non-Fibrous	Asbestos	Comment
PLM	4/14/2014	Gray	0%	100%	None Detected	

Client Sample ID: 040914EMM-46B ***Lab Sample ID:*** 041409779-0063
Sample Description: Rm 3/Top Layer Self-adh Flooring

TEST	Analyzed Date	Color	Non-Asbestos Fibrous	Non-Asbestos Non-Fibrous	Asbestos	Comment
PLM	4/14/2014	Gray	0%	100%	None Detected	

Client Sample ID: 040914EMM-47A-Sheet Flooring ***Lab Sample ID:*** 041409779-0064
Sample Description: Rm 3/Bottom Layer Beige Sheet Flooring / Backing

TEST	Analyzed Date	Color	Non-Asbestos Fibrous	Non-Asbestos Non-Fibrous	Asbestos	Comment
PLM	4/14/2014	Beige	0%	100%	None Detected	

Client Sample ID: 040914EMM-47A-Backing ***Lab Sample ID:*** 041409779-0064A
Sample Description: Rm 3/Bottom Layer Beige Sheet Flooring / Backing

TEST	Analyzed Date	Color	Non-Asbestos Fibrous	Non-Asbestos Non-Fibrous	Asbestos	Comment
PLM	4/14/2014	Gray	25%	50%	25% Chrysotile	

EMSL Analytical, Inc.
200 Route 130 North Cinnaminson, NJ 08077
Phone/Fax: (800) 220-3675 / (856) 786-5974
http://www.EMSL.com / cinnasblab@EMSL.com

EMSL Order ID: 041409779
Customer ID: ENVI54
Customer PO:
Project ID:

Summary Test Report for Asbestos Analysis of Bulk Material via EPA 600/R-93/116 Method via Polarized Light Microscopy

Client Sample ID: 040914EMM-47B-Sheet Flooring ***Lab Sample ID:*** **041409779-0065**
Sample Description: Rm 3/Bottom Layer Beige Sheet Flooring / Backing

TEST	Analyzed Date	Color	Non-Asbestos Fibrous	Non-Asbestos Non-Fibrous	Asbestos	Comment
PLM	4/14/2014	Beige	0%	100%	None Detected	

Client Sample ID: 040914EMM-47B-Backing ***Lab Sample ID:*** **041409779-0065A**
Sample Description: Rm 3/Bottom Layer Beige Sheet Flooring / Backing

TEST	Analyzed Date	Color	Non-Asbestos Fibrous	Non-Asbestos Non-Fibrous	Asbestos	Comment
PLM	4/14/2014				Stop Positive (Not Analyzed)	

Client Sample ID: 040914EMM-48A ***Lab Sample ID:*** **041409779-0066**
Sample Description: Kitchen/Bottom Layer Tan Yellow Floor

TEST	Analyzed Date	Color	Non-Asbestos Fibrous	Non-Asbestos Non-Fibrous	Asbestos	Comment
PLM	4/14/2014	Tan/Yellow	0%	100%	None Detected	Recommend TEM

Client Sample ID: 040914EMM-48B ***Lab Sample ID:*** **041409779-0067**
Sample Description: Kitchen/Bottom Layer Tan Yellow Floor

TEST	Analyzed Date	Color	Non-Asbestos Fibrous	Non-Asbestos Non-Fibrous	Asbestos	Comment
PLM	4/14/2014	Tan/Yellow	0%	100%	None Detected	Recommend TEM

Client Sample ID: 040914EMM-49A ***Lab Sample ID:*** **041409779-0068**
Sample Description: Kitchen/Bottom Layer Mastic

TEST	Analyzed Date	Color	Non-Asbestos Fibrous	Non-Asbestos Non-Fibrous	Asbestos	Comment
PLM	4/14/2014	Tan	0%	100%	None Detected	

Client Sample ID: 040914EMM-49B ***Lab Sample ID:*** **041409779-0069**
Sample Description: Kitchen/Bottom Layer Mastic

TEST	Analyzed Date	Color	Non-Asbestos Fibrous	Non-Asbestos Non-Fibrous	Asbestos	Comment
PLM	4/14/2014	Tan	0%	100%	None Detected	

Client Sample ID: 040914EMM-50A ***Lab Sample ID:*** **041409779-0070**
Sample Description: Kitchen/Top Layer Floor Tile

TEST	Analyzed Date	Color	Non-Asbestos Fibrous	Non-Asbestos Non-Fibrous	Asbestos	Comment
PLM	4/14/2014	Cream	0%	100%	None Detected	

Client Sample ID: 040914EMM-50B ***Lab Sample ID:*** **041409779-0071**
Sample Description: Kitchen/Top Layer Floor Tile

TEST	Analyzed Date	Color	Non-Asbestos Fibrous	Non-Asbestos Non-Fibrous	Asbestos	Comment
PLM	4/14/2014	Cream	0%	100%	None Detected	

EMSL Analytical, Inc.
200 Route 130 North Cinnaminson, NJ 08077
Phone/Fax: (800) 220-3675 / (856) 786-5974
http://www.EMSL.com / cinnasblab@EMSL.com

EMSL Order ID: 041409779
Customer ID: ENVI54
Customer PO:
Project ID:

Summary Test Report for Asbestos Analysis of Bulk Material via EPA 600/R-93/116 Method via Polarized Light Microscopy

Client Sample ID: 040914EMM-51A ***Lab Sample ID:*** **041409779-0072**
Sample Description: Kitchen/Top Layer Floor Tile Mastic

TEST	Analyzed Date	Color	Non-Asbestos Fibrous	Non-Asbestos Non-Fibrous	Asbestos	Comment
PLM	4/14/2014	Yellow	0%	100%	None Detected	

Client Sample ID: 040914EMM-51B ***Lab Sample ID:*** **041409779-0073**
Sample Description: Kitchen/Top Layer Floor Tile Mastic

TEST	Analyzed Date	Color	Non-Asbestos Fibrous	Non-Asbestos Non-Fibrous	Asbestos	Comment
PLM	4/14/2014	Yellow	0%	100%	None Detected	

Client Sample ID: 040914EMM-52A-Composite ***Lab Sample ID:*** **041409779-0074**
Sample Description: Wall/Sheetrock / Joint Compound

TEST	Analyzed Date	Color	Non-Asbestos Fibrous	Non-Asbestos Non-Fibrous	Asbestos	Comment
PLM	4/14/2014	Gray/White	10%	90%	None Detected	

Client Sample ID: 040914EMM-52B-Composite ***Lab Sample ID:*** **041409779-0075**
Sample Description: Wall/Sheetrock / Joint Compound

TEST	Analyzed Date	Color	Non-Asbestos Fibrous	Non-Asbestos Non-Fibrous	Asbestos	Comment
PLM	4/14/2014	Gray/White	10%	90%	None Detected	

Client Sample ID: 040914EMM-52C-Composite ***Lab Sample ID:*** **041409779-0076**
Sample Description: Ceiling/Sheetrock / Joint Compound

TEST	Analyzed Date	Color	Non-Asbestos Fibrous	Non-Asbestos Non-Fibrous	Asbestos	Comment
400 PLM Pt Ct	4/14/2014	Brown/Gray/Tan	10%	89.50%	0.50% Chrysotile	The sample group is not homogeneous

Client Sample ID: 040914EMM-53A ***Lab Sample ID:*** **041409779-0077**
Sample Description: Wall/Joint Compound

TEST	Analyzed Date	Color	Non-Asbestos Fibrous	Non-Asbestos Non-Fibrous	Asbestos	Comment
PLM	4/14/2014	White	0%	100%	None Detected	

Client Sample ID: 040914EMM-53B ***Lab Sample ID:*** **041409779-0078**
Sample Description: Wall/Joint Compound

TEST	Analyzed Date	Color	Non-Asbestos Fibrous	Non-Asbestos Non-Fibrous	Asbestos	Comment
PLM	4/14/2014	White	0%	100%	None Detected	

Client Sample ID: 040914EMM-53C ***Lab Sample ID:*** **041409779-0079**
Sample Description: Ceiling/Joint Compound

TEST	Analyzed Date	Color	Non-Asbestos Fibrous	Non-Asbestos Non-Fibrous	Asbestos	Comment
PLM	4/14/2014	White	0%	100%	None Detected	

EMSL Analytical, Inc.
200 Route 130 North Cinnaminson, NJ 08077
Phone/Fax: (800) 220-3675 / (856) 786-5974
http://www.EMSL.com / cinnasblab@EMSL.com

EMSL Order ID:	041409779
Customer ID:	ENVI54
Customer PO:	
Project ID:	

Summary Test Report for Asbestos Analysis of Bulk Material via EPA 600/R-93/116 Method via Polarized Light Microscopy

Analyst(s):

Dave Poitras PLM (16)

Frank Dicrescenzo PLM (8)

Patrick Carr PLM (47)

Quynh Vu PLM (9)
400 PLM Pt Ct (1)

Reviewed and approved by:

Stephen Siegel, CIH, Laboratory Manager
or Other Approved Signatory

EMSL maintains liability limited to cost of analysis. This report relates only to the samples reported above and may not be reproduced, except in full, without written approval by EMSL. This test report must not be used to claim product endorsement by NVLAP or any agency of the U.S. Government. EMSL bears no responsibility for sample collection activities or analytical method limitations. The laboratory is not responsible for the accuracy of results when requested to physically separate and analyze layered samples. PLM alone is not consistently reliable in detecting asbestos in floor coverings and similar NOBs

Samples analyzed by EMSL Analytical, Inc. Cinnaminson, NJ NVLAP Lab Code 101048-0, AIHA-LAP, LLC-IHLAP Lab 100194, NYS ELAP 10872, NJ DEP 03036

Report amended: 04/16/201409:14:15 Replaces initial report from: 04/14/201418:58:38 Reason Code: Data Entry-Change to Appearance

Appendix D

Lead Paint Testing Procedures and Equipment

STANDARD OPERATING PROCEDURES
HUD AND STATE OF CONNECTICUT LEAD-BASED PAINT INSPECTIONS

TESTING PROCEDURES AND EQUIPMENT

The U. S. Department of Housing and Urban Development (HUD) "Guidelines for the Evaluation and Control of Lead Hazards in Housing, September 1997" were consulted for this lead evaluation. HUD has been the agency at the federal level with responsibility for the establishment of national lead-based paint standards for testing and abatement. The HUD document will be referenced as the Guidelines in this report. The State of Connecticut Department of Public Health's current lead regulations, Lead Poisoning Prevention and Control (19a-111-1 through 19a-111-11) were also consulted.

This lead evaluation was comprehensive. A comprehensive inspection means that representative painted surfaces were systematically evaluated on a room-by-room basis in accordance with the Guidelines and the State of Connecticut regulations.

Lead-based paint surfaces and components were identified by utilizing on-site x-ray fluorescence (XRF) instruments. Fuss & O'Neill EnviroScience, LLC owns and utilizes Radiation Monitoring Device LPA-1s (RMD) instruments exclusively for lead-based paint testing. Each instrument is operated in accordance with state and federal and manufacturer standards on the use of the instruments. State and federal protocols provide, with the exception of wall surfaces, one reading with the instrument on a representative component in each room, i.e., baseboard, chair rail, etc., as sufficient to establish the lead paint classification of all the representatives of that component type in a room. In the case of walls, because of the large spatial areas involved and the variability in lead content in paint over such large areas, the federal and state governments want a reading on each wall surface in a room. Therefore, representative testing is not permitted for walls.

The federal government has developed Performance Characteristic Sheets (PCS) for the type of instrument cited above. Each instrument must be calibrated in accordance with these PCSs on a 1.0-milligram lead standard. Each of EnviroScience's instruments has one of these standards assigned to it. Some of the standards were purchased directly from the government and the others from the manufacturers of the instruments.

For the RMD in the standard reading mode on metal, a Substrate Equivalent Lead (SEL) concentration has to be determined. To determine the SEL, the paint is removed from the surface of the component to obtain a bare substrate reading. After removing the paint, the surface is wiped with a 5% trisodium phosphate solution (a heavy duty cleaner). All paint residue is collected and properly disposed. Once the paint and surrounding area are cleaned, the XRF is utilized to determine the SEL for each surface. The SEL values are subtracted from the XRF values to determine the Corrected Lead Concentration (CLC). The CLC is the lead content of the paint on the component tested.

The RMD instrument has federal government-determined positive and negative ranges for the definition of lead-based paint. XRF results are classified using either the threshold or the inconclusive range. For the threshold, results are classified as positive if they are greater than or equal to the threshold and negative if they are less than the threshold. There is no inconclusive

classification when using the threshold values associated with an RMD instrument. The ranges for the RMD instrument and their various operating modes are as follows:

Radiation Monitoring Device LPA Analyzer 1

30-Second Standard Mode Reading Description	Substrate	Threshold (mg/cm²)
Results corrected for substrate bias on metal substrate only.	Brick	1.0
	Concrete	1.0
	Drywall	1.0
	Metal	0.9
	Plaster	1.0
	Wood	1.0

Quick Mode Reading Description	Substrate	Threshold (mg/cm²)	Inconclusive Range (mg/cm²)
Readings not corrected for substrate bias on any substrate.	Brick	1.0	None
	Concrete	1.0	None
	Drywall	1.0	None
	Metal	1.0	None
	Plaster	1.0	None
	Wood	1.0	None

Prior to the start of any testing, a sketch of the building is drawn, and side designations are given to help identify exactly where readings were taken. Drawings depicting the room-numbering scheme are located on the cover page(s) for the building(s) inspected. Each side of the building was labeled A, B, C, or D. The wall "A" side of the unit is generally the side of primary entrance into a dwelling, and this room is always Room 1. Areas in the units include rooms, hallways, and closets. Areas are numbered in a clockwise fashion as building construction allows. This allows the inspector to indicate which substrate surface was tested. The condition of the surface is described by a check mark in the appropriate column, under the heading "condition of surface" on the testing form.

When more than one surface type was present on a side, the component tested was indicated with a number. If two windows were present on a building side, they were numbered left to right. Closet shelves and shelf supports were numbered top to bottom.

It is understood that the room layouts presented in the report are in conformance with the conditions that exist at the time the testing is performed. EnviroScience avoids labeling a room solely by its current functional use (i.e., living room, bedroom, etc.) since this use can change over time. Similarly, room layouts can change dramatically as dwellings are renovated and additions are built, incorporating existing rooms, or existing interior walls are moved or eliminated altogether.

Appendix E

Lead Testing Field Data Sheets

FUSS & O'NEILL
EnviroScience, LLC

www.fando.com

146 Hartford Road, Manchester, CT 06040

(860) 646-2469 Fax (860) 649-6883

LEAD INSPECTION COVER SHEET

Inspector's Information

Inspector's Name: Eduardo Miguel Marques
License Number: 002132
XRF Model: RMD
Serial Number: 324RI
Date of Inspection: 4-9-14
Project Number: 20014 0370.A1E

Property Information

Building Address: 19 Stevens St. (Street)
East Haven, CT (City) (State)
Age of Property:
Describe Structure: one-story residential structure

Are there lead hazards present? ☑ Yes ☐ No
Were lead dust wipes taken? ☐ Yes ☑ No
Were soil samples collected? ☐ Yes ☑ No
Were drinking water samples collected? ☐ Yes ☑ No

Single Family Dwelling ☑

Is there an EBL child present?
☐ Yes ☑ No ☐ Unknown

Is there a child under six years of age in the dwelling?
☐ Yes ☑ No ☐ Unknown

Multiple Family Dwelling ☐

Number of units in building:
Number of units tested:
Is there an EBL child present in the building?
☐ Yes ☐ No ☐ Unknown
If EBL child, which unit(s)?
Is there a child under six years of age in the building?
☐ Yes ☐ No ☐ Unknown
If child under six, which unit(s)?

XRF Calibration Check

Calibration Paint Film Used: ☐ NIST 1.02 mg/cm² ☑ Manufacturer's Standard 1.0 mg/cm²

Calibration Check Limits Used: ☑ RMD (0.7 to 1.3 mg/cm² inclusive)
☐ Scitec MAP4 (0.6 to 1.2 mg/cm² inclusive)

	Hour	First Reading	Second Reading	Third Reading	Average
First Check	7:35am	0.9	1.0	1.0	0.96
Second Check	8:40am	1.0	0.8	0.9	0.90
Third Check					
Fourth Check					

FUSS & O'NEILL
EnviroScience, LLC

www.fando.com

146 Hartford Road, Manchester, CT 06040

(860) 646-2469 Fax (860) 649-6883

Project Name: Lathrop Assoc.

Project Number: 20140370.AE

Project Manager: KM

Address: 19 Stevens St., East Haven, CT

Apt. #/Bldg #:

Floor:

Room:

Page 1 **of** 1

Number of Doors:

No. of Windows:

Diagram of: Interior

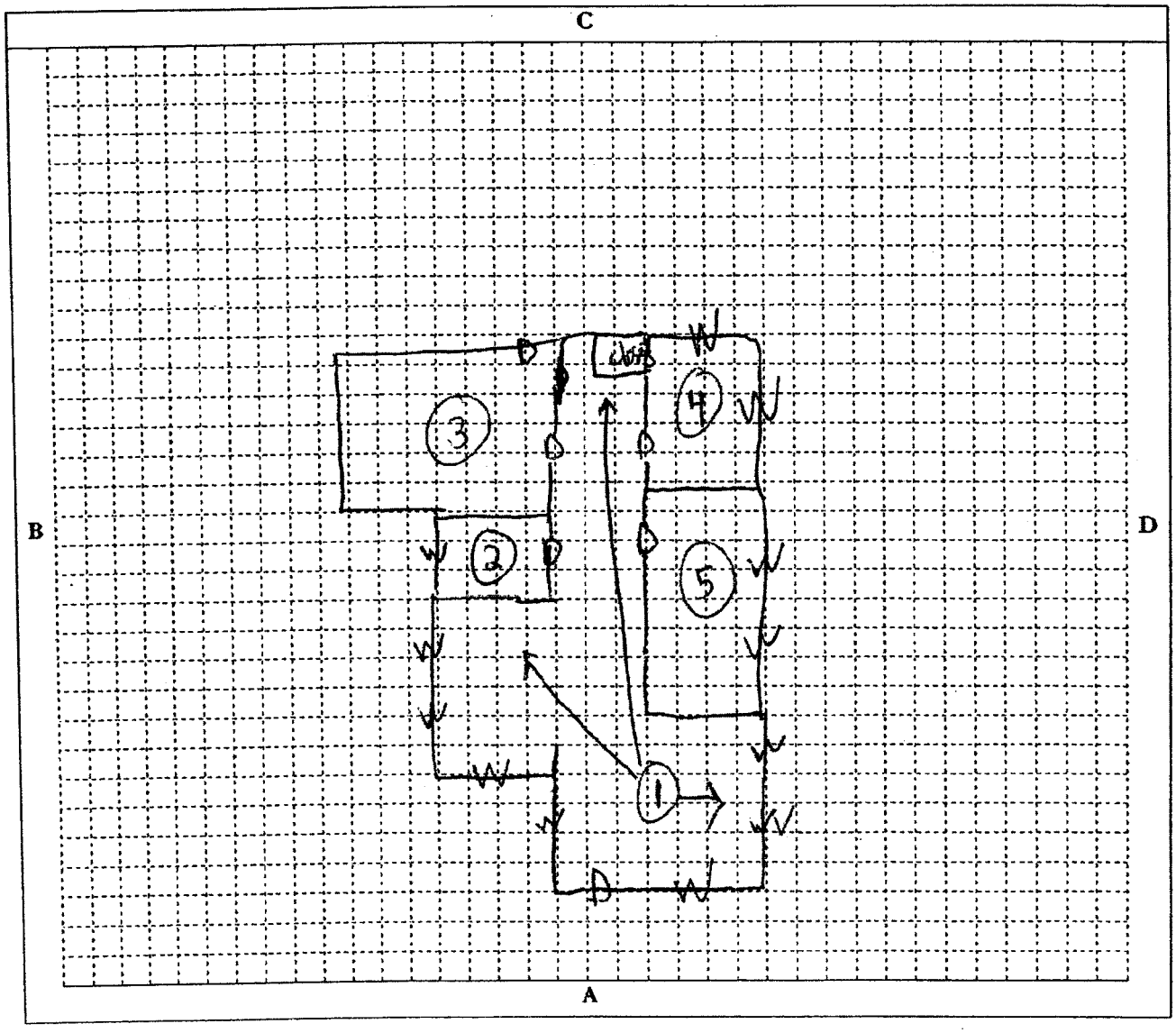

(#) Room Number Door Window Page _____ of _____

FUSS & O'NEILL
EnviroScience, LLC

www.fando.com

146 Hartford Road, Manchester, CT 06040

(860) 646-2469 Fax (860) 649-6883

XRF FIELD DATA SHEET

Address: 19 Stevens St. East Haven **Apt. #:**

Floor: **Room:** **Page** 1 **of** 4

Project Name: Lathrop Assoc. **Project Number:** 20140370.A1E

Project Manager: KM **(If Positive - Check All That Apply)**

Side	Surface	XRF Readings	POS	Substrate	Defective	Chewable	Friction	Impact	Comments
A	siding	-0.1		W					Exterior
A	w. trim	-0.0		W					
A	w. sash	0.1		W					
A	cornerboard	-0.1		W					
A	door	-0.1		M					
A	d. trim	-0.0		W					
A	d. jamb	-0.0		W					
A	fascia	79.9	✓	W	NO				
A	siding	-0.4		transite					
B	w. trim	0.5		W					
B	w. sash	0.0		M					
B	gutter	-0.2		M					
D	w. sash	0.3		W					
D	w. sill	0.3		W					
C	door	-0.0		M					
C	d. trim	-0.1		W					
C	d. jamb	0.0		W					
C	deck floor	-0.1		W					
C	deck post	0.6		W					
C	deck rail	0.1		W					
C	w. trim	0.4		W					
	Floor platform	-0.2		W					Rm. 1
A	walls	-0.0		S					
B		-0.2		S					
C		-0.3		S					
D		0.0		S					
B	baseboard	0.2		W					
	ceiling	-0.3		S					
A	w. trim	-0.1		W					
A	w. sill	0.0		W					
A	w. jamb	0.0		W					

* Substrate Type: Metal = M, Wood = W, Plaster = P, Sheetrock = S, Concrete = C, Brick = B
N/A: Not Accessible; N/C: Not Coated; COV: Covered; VR – Vinyl Replacement

Notes:

FUSS & O'NEILL
EnviroScience, LLC

www.fando.com

146 Hartford Road, Manchester, CT 06040

(860) 646-2469 Fax (860) 649-6883

XRF FIELD DATA SHEET

Address: 19 Stevens St., East Haven, CT **Apt. #:**

Floor: **Room:** **Page** 2 **of** 4

Project Name: Lathrop Assoc. **Project Number:** 20140370.AHE

Project Manager: KM **(If Positive - Check All That Apply)**

Side	Surface	XRF Readings	POS	Substrate	Defective	Chewable	Friction	Impact	Comments
A	w. well	0.3		W					Rm 1
B	column	-0.1		W					
C	crown molding	-0.0		W					
C	cabinet	-0.2		W					
C	sliding-upper	6.3	✓	W	No				✓ @ foyer
	ceiling, joist	-0.1		W					
A	door	-0.1		M					
A	door trim	0.0		W					
A	door jamb	-0.1		W					
A	wall	-0.0		S					Rm. 2
B		-0.1		S					
C		0.1		S					
D		0.1		S					
	floor	-0.2		W					
B	baseboard	-0.0		W					
B	w trim	0.0		W					
B	w sash	-0.1		W					
B	w. well	1.5	✓	W	NO				
D	door	-0.1		W					
D	door trim	0.0		W					
D	door jamb	0.1		W					
A	walls	-0.1		S					Rm 3
B		-0.3		S					
C		-0.1		S					
D		-0.0		S					
	ceiling	-0.1		S					
	ceiling	-0.0		S					Rm. 2
C	door	-0.1		M					Rm 3
C	door jamb	0.0		W					
C	door trim	N/A		—					
C	W. sash-only	-0.1		W					

* Substrate Type: Metal = M, Wood = W, Plaster = P, Sheetrock = S, Concrete = C, Brick = B
N/A: Not Accessible; N/C: Not Coated; COV: Covered; VR – Vinyl Replacement

Notes:

FUSS & O'NEILL
EnviroScience, LLC
146 Hartford Road, Manchester, CT 06040
www.fando.com
(860) 646-2469 Fax (860) 649-6883

XRF FIELD DATA SHEET

Address: 19 Stevens St, East Haven, CT
Apt. #:
Floor:
Room:
Page 3 of 4
Project Name: Lathrop Assoc.
Project Number: 20140370.AIE
Project Manager: KM
(If Positive - Check All That Apply)

Side	Surface	XRF Readings	POS	Substrate	Defective	Chewable	Friction	Impact	Comments
C	w. well	0.1		W					Rm. 3
	ceiling joist	1.4	✓	W	NO				↓
A	wall - upper	-0.5		S					Rm. 4
B	↓	-0.2		S					↓
C		-0.3		S					
D		-0.2		S					
A	wall - lower	0.0		W					
B	↓	-0.1		W					
C		0.0		W					
D		0.0		W					
C	chair rail	0.2		W					
C	crown molding	0.1		W					
C	baseboard	0.4		W					
C	w. trim	-0.2		W					
C	w. sash	-0.1		W					
C	w. sill	-0.0		W					
C	w. well	0.2		W					
B	door trim	-0.3		W					
B	door jamb	-0.0		W					
B	shelf support	-0.2		W					
A	wall - closet	-0.1		S					
B	↓	0.0		S					
C		-0.1		S					
D		-0.0		S					
	ceiling - closet	-0.0		S					↓
A	wall	-0.3		S					Rm 5
B	↓	-0.2		S					↓
C		-0.0		S					
D		-0.2		S					
	ceiling	-0.2		S					
	ceiling joist	-0.0		W					

* Substrate Type: Metal = M, Wood = W, Plaster = P, Sheetrock = S, Concrete = C, Brick = B
N/A: Not Accessible; N/C: Not Coated; COV: Covered; VR – Vinyl Replacement
Notes:

FUSS & O'NEILL
EnviroScience, LLC

www.fando.com

146 Hartford Road, Manchester, CT 06040

(860) 646-2469 Fax (860) 649-6883

XRF FIELD DATA SHEET

Address: 19 Stevens St. East Haven, CT **Apt. #:** ___

Floor: ___ **Room:** ___ **Page** 4 **of** 4

Project Name: Lathrop Assoc. **Project Number:** 20140370.AIE

Project Manager: KM **(If Positive - Check All That Apply)**

Side	Surface	XRF Readings	POS	Substrate	Defective	Chewable	Friction	Impact	Comments
B	door trim	0.1		W					Rm 5
B	door jamb	-0.1		W					
D	w. trim	0.0		W					
D	w. sash	0.0		W					
D	w. sill	-0.1		W					
D	w. well	1.0	✓	W	yes				
B	wall - closet	-0.1		S					
C		0.0		S					
D		-0.3		S					
	ceiling - closet	0.4		S					

* Substrate Type: Metal = M, Wood = W, Plaster = P, Sheetrock = S, Concrete = C, Brick = B
N/A: Not Accessible; N/C: Not Coated; COV: Covered; VR – Vinyl Replacement

Notes: ___

Appendix F

Lead TCLP and Chain of Custody

Date Samples Received: 04/11/14

Client Name : **Fuss & O'Neill EnviroScience**	CTL Lab No. : 0414224
Report Date : 04/15/14	PO/ Job No. : 20140370.A1E

RESULTS OF ANALYSIS

TCLP EPA 1311

Matrix Type :	**S**
CTL Sample No.:	**4786**
Field ID :	**040914EMM-01T**

Parameters	**RL**				**Date Analyzed**
Lead-mg/L	0.005	0.089			04/15/14

RL= Reporting Limit **ND**= Not Detected

Matrix Type: W= Water/Aqueous **S**= Soil/Solid **O**= Oil/Hydrocarbon

Connecticut Testing Laboratories, Inc.
165 Gracey Avenue / Meriden, CT 06451
(203) 634-3731 (Fax) 630-1336
Certification CT-PH0547/ MA-CT035

FUSS & O'NEILL
EnviroScience, LLC
146 Hartford Road, Manchester, CT 06040
www.fando.com
(860) 646-2469 Fax (860) 649-6883

0414224

SAMPLE LOG FOR TCLP BULKS

Sheet No. 1 of 1

Project Name: Lathrop Assoc.
Project Number: 20140370.A1E
Building: 19 Stevens St. East Haven, CT
Project Manager: KM

Sample ID Number	Sample Location/Building	Material Type	Result (ppm)	Lab Number
040914EMM-01T	19 Stevens St. East Haven	Bldg. Composite		4786

Analysis Method: TCLP Lead

Turnaround Time 3 day

Based on the turnaround time indicated above, analyses are due to Fuss & O'Neill EnviroScience on or before this date:_____.
Please call the Fuss & O'Neill EnviroScience laboratory at 860-646-2469 if analyses will be late.

Fax Results To: Fuss & O'Neill EnviroScience Laboratory at 888-838-1160

Special Instructions:

Samples Collected By: [signature] Date: 4-9-14 Time: 9 AM
Samples Rec'd/Sent By: [signature] Date: 4/11/14 Time: 1:30 pm
Samples Received By: Date: Time:

Shipped To: ☐ EMSL (State) ☑ Other CT Testing Lab

Method of Shipment: ☐ Fed Ex. ☐ UPS Overnight ☐ UPS Ground ☑ Other Courier

Appendix G

Lead in Soil Sample Results and Chain of Custody

FUSS & O'NEILL
EnviroScience, LLC

146 Hartford Road, Manchester, CT 06040

www.fando.com

(860) 646-2469 Fax (860) 649-6883

20140659 4

SAMPLE LOG FOR LEAD SOIL

Sheet No. 1 of 1

Project Name: Lothrop Assoc.
Building: 19 Strathern St. Eastchester, CT

Project Number: 20140370.01E
Project Manager: KM

Sample ID Number	Sample Location/Building	Soil Condition	Result (%)	Lab Number
1- 050214A-39	Composite B-Side drip line	Bare		

Analysis Method: EPA-SW-846-3050-7420

Turnaround Time 24 hrs

Date: Time:
Date: Time:

Based on the turnaround time indicated above, analyses are due to Fuss & O'Neill EnviroScience on or before this date: 5/5/14
Please call the Fuss & O'Neill EnviroScience laboratory at 860-646-2469 if analyses will be late.

Fax Results To: Fuss & O'Neill EnviroScience Laboratory at 888-838-1160

Special Instructions:

Samples Collected By: Ulises Angusc Date: 5/2/14 Time: 0830
Samples Rec'd/Sent By: Date: / Time: /
Samples Received By: Date: 5/2/14 Time: 10am EMSL-FX

Shipped To: ☑ EMSL (State) NJ ☐ Other

Method of Shipment: ☒ Fed Ex. ☐ UPS Overnight ☐ UPS Ground ☐ Other

(SEE REVERSE FOR DIAGRAM)

EMSL Analytical, Inc.
200 Route 130 North, Cinnaminson, NJ 08077
Phone/Fax: (856) 303-2500 / (856) 786-5974
http://www.EMSL.com cinnaminsonleadlab@emsl.com

EMSL Order:	201406594
CustomerID:	ENVI54
CustomerPO:	20140370.A1E
ProjectID:	

Attn: **Fuss & O'Neill EnviroScience, LLC**
146 Hartford Road
Manchester, CT 06040

Phone:	(860) 646-2469
Fax:	(888) 838-1160
Received:	05/03/14 10:00 AM
Collected:	5/2/2014

Project: **20140370.A1E / Lothrop Assoc. / 19 Stehen Street Easthaven,CT**

Test Report: Lead in Soils by Flame AAS (SW 846 3050B/7000B)*

Client Sample Description	*Lab ID*	*Collected*	*Analyzed*	*Lead Concentration*
0502144A-39	0001	5/2/2014	5/3/2014	250 mg/Kg
	Site: Composite @ B-Side Dripline Desc: Bare			

Julie Smith - Laboratory Director
NJ-NELAP Accredited:03036
or other approved signatory

*Analysis following Lead in Soil/Solids by EMSL SOP/Determination of Environmental Lead by FLAA. Reporting limit is 40 mg/kg based on the minimum sample weight per our SOP. Unless noted, results in this report are not blank corrected. This report relates only to the samples reported above and may not be reproduced, except in full, without written approval by EMSL. EMSL bears no responsibility for sample collection activities. Samples received in good condition unless otherwise noted. Results reported based on dry weight. "<" (less than) result signifies that the analyte was not detected at or above the reporting limit. Measurement of uncertainty is available upon request. The QC data associated with the sample results included in this report meet the recovery and precision requirements established by the AIHA-LAP, unless specifically indicated otherwise

Samples analyzed by EMSL Analytical, Inc. Cinnaminson, NJ NELAP Certifications: NJ 03036, NY 10872, PA 68-00367, AIHA-LAP, LLC ELLAP 100194, A2LA 2845.01

Initial report from 05/05/2014 10:26:00

Appendix H

Airborne Radon Assessment Results and Chain of Custody

RTCA RADON TESTING CORPORATION OF AMERICA

PC1404140020

Site Radon Inspection Report

Date : 4/15/2014

Ms. Karron Redfield
Fuss & O'Neill Enviroscience, LLC
146 Hartford Road
Manchester, CT 06040-

Client: Project #: 20140370.A1E
Test Location 19 Stevens Street
East Haven, CT 06512-

Individual Canister Results

Canister ID# : 2302456
Canister Type : Charcoal Canister 3 inch
Location : Living rm - Blank
Radon Level : **0.1 pCi/L**
Error for Measurement is: ± 0.6 pCi/L

Test Start : 04/09/2014 @ 08:45
Test Stop : 04/11/2014 @ 14:02
Received: 04/14/2014 @ 09:45
Analyzed: 04/14/2014 @ 13:17

Canister ID# : 2304781
Canister Type : Charcoal Canister 3 inch
Location : Living rm
Radon Level : **0.2 pCi/L**
Error for Measurement is: ± 0.3 pCi/L

Test Start : 04/09/2014 @ 08:45
Test Stop : 04/11/2014 @ 14:02
Received: 04/14/2014 @ 09:45
Analyzed: 04/14/2014 @ 13:17

Canister ID# : 2304811
Canister Type : Charcoal Canister 3 inch
Location : Living rm - Dup
Radon Level : **0.1 pCi/L**
Error for Measurement is: ± 0.2 pCi/L

Test Start : 04/09/2014 @ 08:45
Test Stop : 04/11/2014 @ 14:02
Received: 04/14/2014 @ 09:45
Analyzed: 04/14/2014 @ 13:17

The reported results indicate that radon levels in the building tested are below the United States Environmental Protection Agency (EPA) action level of 4.0 picoCuries per liter of air (pCi/L). The EPA recommends retesting if your living patterns change and you begin occupying a lower level of the building, such as a basement or if major remodeling is done.

General radon information may be obtained by consulting the EPA booklet: A Citizen's Guide to Radon (www.epa.gov/radon/pubs/ditguide.html). To request a copy or for further information, please contact your state health department. The EPA maintains a radon information website, including copies of its publications, at www.epa.gov/iaq/radon.

For New Jersey clients: Please see the attached guidance document entitled Radon Testing and Mitigation: The Basics for further information.

For New York clients: If the radon level of one or more testing devices is equal to or exceeds 20 pCi/L please contact the New York State Department of Health, Bureau of Environmental Radiation Protection, for technical advice and assistance at 518-402-7556 or toll free 1-800-458-1158.

NRSB

Andreas C. George
Radon Measurement Specialist
NJ MES 11089

Dante Galan
Laboratory Director

NRSB ARL0001
NYS ELAP ID: 10806
PADEP ID: 0346
NJDEP ID: NY933
NJ MEB 90036
FL DOH RB1609

(914)345-3380
FAX (914)345-8546

2 Hayes Street, Elmsford, NY 10523
www.rtca.com

FUSS & O'NEILL
EnviroScience, LLC

Disciplines to Deliver

4/14/14
ENV/H
DE

*RTCA: These items must be included on our results pages

Radon Testing Summary Sheet

*Project Number: 20140370.AIE
*Client Name: Lathrop Assoc
*Building: 19 Stevens St.
*Site Address: East Haven, CT 06512

Contact/Phone #:

Placed by: EMM
Retrieved by: EMM
Start Date: 4-9-14
Stop Date: 4-11-14
Weather at Placement: sunny, cool

Instructions: Tear off center bar coded label from canister and affix to sheet in spaces provided. Please make sure top bar coded label is left on detector. Identify test location for each detector in space provided for that detector (room #, location in room, etc.). Use additional sheets as necessary. Please mark clearly if any detector is missing or damaged at retrieval.

REMOVE THIS PORTION AND AFFIX TO TEST INFORMATION
2304781

Start Time: 8:45 am
Stop Time: 2:02 pm
Identifier: living Rm

Start Time:
Stop Time:
Identifier:

REMOVE THIS PORTION AND AFFIX TO TEST INFORMATION FORM
2304811

Start Time: 8:45 am
Stop Time: 2:02 pm
Identifier: living Rm (Bmt)

Start Time:
Stop Time:
Identifier:

REMOVE THIS PORTION AND AFFIX TO TEST INFORMATION FORM
2302456

Start Time: 8:45 am
Stop Time: 2:02 pm
Identifier: living Rm (Bmt)

Start Time:
Stop Time:
Identifier:

Start Time:
Stop Time:
Identifier:

Start Time:
Stop Time:
Identifier:

Start Time:
Stop Time:
Identifier:

Start Time:
Stop Time:
Identifier:

146 Hartford Road, Manchester, CT 06040
t (860) 646-2469
f (860) 649-6883
www.FandO.com

Connecticut
Massachusetts
Rhode Island
South Carolina