PETROGEN®

Oxy-Gasoline Cutting System

the liquid fuel torch

REFERENCE MANUAL

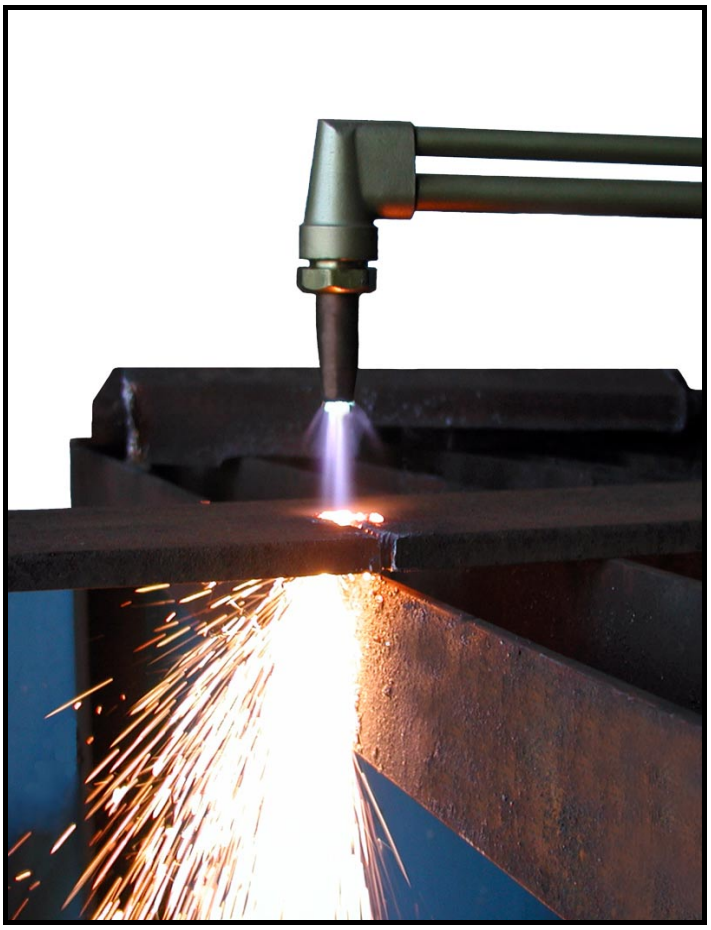

First in safety and power!

PETROGEN®
Oxy-Gasoline Cutting System

the liquid fuel torch

Congratulations. You now have the best oxy-fuel cutting torch for even the toughest steel cutting jobs. The major cost savings, safety and great performance that PETROGEN provides are now yours.

Since the PETROGEN torch uses liquid fuel, it requires a slightly different lighting and flame adjusting process than you would use with traditional compressed gas torches. Please read the information provided in this manual, especially the section Instructions for Initial Use, to familiarize yourself with the simple techniques required for PETROGEN use. With a little practice you will be making cuts with ease that would be impossible with any other torch.

This manual provides in-depth information on maintenance and repair, optional equipment, parts and other useful facts about the PETROGEN System. Please retain this manual with your PETROGEN unit.

Let us know if you have any questions or suggestions about our products. We always invite your comments, and we guarantee your complete satisfaction.

Milt Heft
General Manager

Simply Smarter
PETROGEN

GETTING STARTED . . .

1

Fill tank only at a gasoline station. Gasoline must be fresh (not over 4 months old) and not contaminated with oil or diesel fuel. Low-octane fuel works fine.

2

Install oxygen backflash arrestor between torch and oxygen hose. No need for a fuel line backflash arrestor.

Attach hoses. Green to oxygen (right hand thread). Red to gasoline (left hand thread).

3

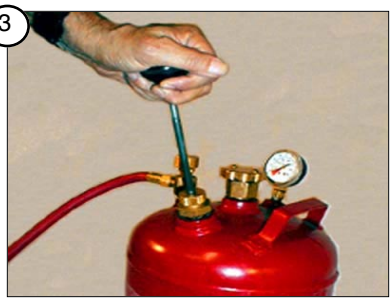

Pump tank to 20 psi. Pressure drops as torch cuts. When it drops to 10 psi, pump back to 20 psi. Fast flow safety valve needs 10 psi to function.

4

Open tank gasoline valve slowly, about 2 turns. After 30 seconds, open valve fully. If gasoline is shut off by fast flow valve, close valve, tap tank on the ground and repeat.

5

Select cutting tip and oxygen pressure from cutting chart on gasoline tank. Open oxygen bottle valve slowly and fully. Set desired pressure on oxygen regulator.

6

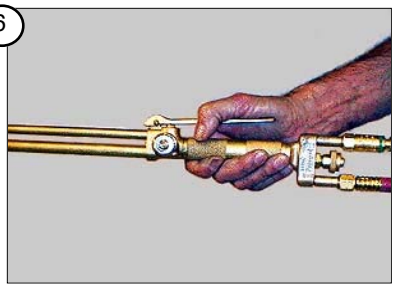

Purge oxygen line by depressing cutting lever for 5 seconds. Failure to do this may create conditions for oxygen backflash.

7

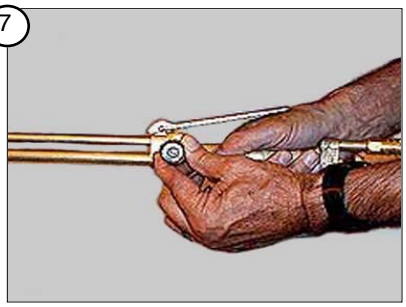

Open torch oxygen valve about 1/2 turn. Final opening depends on tip size and oxygen pressure.

8

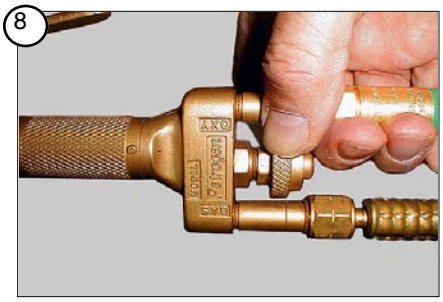

Open torch gasoline valve until light mist appears. If liquid drips from torch, increase oxygen or reduce gasoline.

9

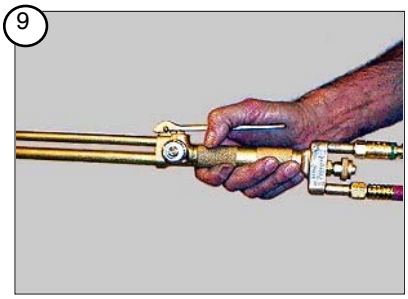

Purge oxygen line again by depressing cutting lever for 5 seconds.

10

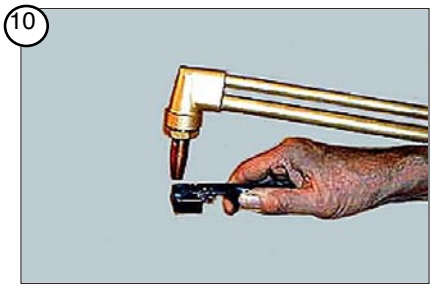

Ignite torch by striking spark close to the tip and to one side. A new hose contains air which extinguishes the flame. Just light again - about 2 or 3 times until line is purged of air.

11

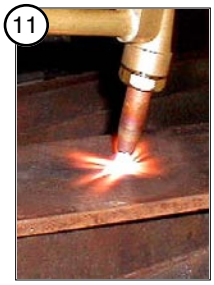

Warm tip by pressing it to steel at an angle. Adjust gas valve until the steel turns a bright red orange.

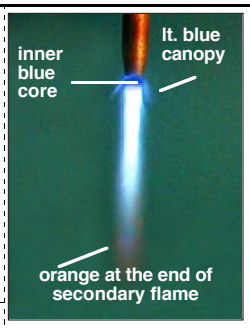

Final adjusted flame should have an inner blue core about 3/16-inch long (4-5 mm).

Important Note: New gasoline hose contains an oily residue from manufacture that causes the flame to run yellow for about 10 minutes. Longer hoses take longer for this residue to clear.

12

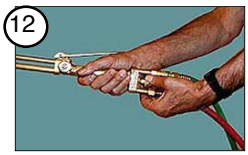

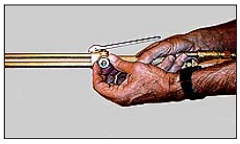

When finished cutting, shut down torch by closing **gasoline first, then oxygen.**

PETROGEN®
OXY-GASOLINE CUTTING SYSTEM

THE LIQUID FUEL TORCH

CALL US IF YOU NEED ASSISTANCE.
If you need help, we want to hear from you!
Telephone: 510-569-7877
Toll Free: 877-88-TORCH (877-888-6724)
Fax: 510-569-8070

IMPORTANT INFORMATION

*** Fill the PETROGEN tank with fresh gasoline from a gasoline station.**

Fuel from other storage tanks is often old and/or contaminated and can make the PETROGEN flame run yellow.

If the preheat flame burns yellow:

1. Tip may be too cool. Warm the tip by pressing it to the steel.
2. Flame may be too rich in gasoline. Increase oxygen or decrease gasoline.
3. Flame may be too large. Reduce deep blue core of flame to 1/8 inch (3-4 mm).
4. A new gasoline hose contains an oily residue from the manufacturing process which causes the flame to burn yellow. It will disappear in about 10 minutes for each 20 feet of hose.
5. Gasoline may be contaminated with oil. Get new fresh gas.
6. Oxygen supply may be insufficient.

If the flame goes out while cutting:

It might still be burning inside the tip. Stop the burning by quickly shutting off the preheat oxygen, and then just as quickly opening it up again. Re-light the torch. There is no danger, but you might ruin the tip if you don't act quickly.

If the tip nut gets loose:

Do not tighten the tip nut while the torch head is hot. If the torch head gets hot, the tip nut sometimes becomes loose. Tightening while the brass is hot might distort the head. Expansion of gasoline inside the cutting tip makes the tip run cool, but exposing the torch head to a very hot environment can overcome the cooling effect and the head can get hot. This heat can expand the brass in the torch head so that the threads pull away from the threads on the tip nut. The tip nut may loosen and the torch will pop and leak.

Cool the head before tightening. The head can be cooled rapidly by closing both valves, then opening only the gasoline valve. The hot tip will vaporize the gasoline instantly and cool the tip. When the vapor turns to a mist the head is cool and the tip nut can be tightened. (To keep the torch cool, take advantage of PETROGEN's long "coupling distance," described below.)

You can lift the tip high above the steel and still keep cutting:

You can back away from emerging slag and heat concentrations because of the gasoline flame's long coupling distance. The PETROGEN torch does not need to be precisely 1/4" away from the steel to continue cutting, as other torches do. Keep the tip out of the hot spots and you will Increase tip life and prevent overheating of the torch head.

You can bury the tip in mud, sand, water, etc.:

The flame might go out but will never backflash. The flame is very forceful because the gasoline in the tip expands 160 times when it changes from liquid to vapor.

You are safe:

1. The PETROGEN torch cannot backflash up the gasoline line. Liquid gasoline does not burn.
2. Any leak would leave a wet spot, would be visible and could be fixed quickly.
3. If the gasoline hose is cut, the fast flow check valve in the tank shuts off the fuel.

CONTACT US WITH QUESTIONS AT ANY TIME. WE WANT TO HEAR FROM YOU!

Toll Free (U.S.): 877-88-TORCH

(877-888-6724)

PETROGEN, Inc.

P.O. Box 1778

San Leandro, CA 94577

Tel: (510) 569-7877

Fax: (510) 569-8070

E-mail: torch@petrogen.com

Website: www.petrogen.com

Made in the U.S.A.

CONTENTS

1	SAFETY INSTRUCTIONS	page 2
2	STANDARD PACKAGE CONTENTS	page 4
3	HEAVY RESCUE UNIT	page 6
4	PORTABLE CUTTING SYSTEM	page 7
5	INSTRUCTIONS FOR INITIAL USE	page 8
6	QUICK REFERENCE GUIDE	page 11
7	SAFETY FEATURES	page 14
8	PERFORMANCE	page 15
9	HINTS ON CUTTING	page 18
10	OPERATING COSTS	page 21
11	MAINTENANCE & REPAIR	page 24
12	TROUBLE-SHOOTING	page 28
13	OPTIONAL EQUIPMENT	page 36
14	PARTS LIST & DRAWINGS	page 42
15	PARTS DESCRIPTIONS	page 51
16	APPENDICES	
	A: FUEL COMPARISONS	page 55
	B: ENERGY CONSERVATION ANALYSIS	page 56
17	INDEX	page 57

IMPORTANT SAFETY INSTRUCTIONS
(SAVE THESE INSTRUCTIONS)

IMPORTANT: NEVER USE PARTS OF ANY OTHER SYSTEM TOGETHER WITH ANY PETROGEN UNIT. THAT WOULD COMPROMISE THE SAFETY OF THE PETROGEN SYSTEM. The PETROGEN System is unique. Torch, Tank, Tips and Gasoline Hose comprise the System. All parts must be used together.

GASOLINE SOURCE.

The PETROGEN tank should always be filled at a gasoline station pump where all safety regulations for gasoline handling are observed.

TORCH OPERATION.

PURGE THE OXYGEN LINE FOR AT LEAST 5 SECONDS BEFORE IGNITING THE TORCH. Because we want to provide the safest torch in the industry, we include an oxygen backflash arrestor with each torch. However, even with the use of a backflash arrestor there is no substitute for adequately purging the oxygen line before lighting. We strongly urge that operators purge the oxygen line thoroughly, as is recommended by all other torch manufacturers. (The PETROGEN torch cannot backflash up the fuel line, so no backflash arrestor is required for the gasoline line.)

ALWAYS KEEP GASOLINE TANK PRESSURE ABOVE 10 PSI WHEN OPERATING THE TORCH. (Above the red zone on the gasoline tank pressure gage.) This ensures that the fast-flow check valve will operate in case of gasoline hose rupture.

WHEN YOU LIGHT UP:

- Purge the oxygen hose by depressing the oxygen lever for at least 5 seconds.
- Open the pre-heat **oxygen** first about 1/2 turn.
- Then open the **gasoline** until you see a light mist. You should never see dripping gasoline while operating the torch.
- Purge the oxygen line again.
- The torch is now ready to be lit. (See “Instructions for Initial Use” for more details.)

SHUTTING DOWN THE TORCH.

- Close the torch **gasoline** valve first.
- Then close the torch pre-heat **oxygen** valve.
- Make sure the gasoline tank filler cap is closed.
- Check that the gasoline tank shut-off valve is closed.

Leave the tank, torch and hose connected for storage to avoid gasoline spillage. After you close all the valves, check to make sure there is no wet spot that would indicate a leak that should be fixed. An important safety feature of the PETROGEN System is the visibility of a liquid fuel leak.

SPARKS.

Always use protective clothing, shoes and safety glasses when using the PETROGEN torch. Although the sparks produced by the PETROGEN cutting process are light weight and without much heat because the flame is 100% oxidizing, we recommend the use of full personal safety equipment when cutting steel.

STORAGE.

Storage of the PETROGEN gasoline tank should comply with all local regulations that apply to your facilities.

TESTING THE FAST-FLOW CHECK VALVE IN THE TANK GASOLINE SHUT-OFF VALVE.

All shut-off valves are factory tested. To understand how it operates, we suggest that you test it as follows:

1. Put gasoline in the tank.
2. Remove the gasoline hose from the tank fitting.
3. Pressurize the tank to 10 p.s.i. (at the edge of the red zone).
4. Take the tank to an area where a small amount of gasoline spillage will not be hazardous (approx. 2 tablespoons).
5. Open the gasoline shut-off valve as quickly as you can. This will activate the ball check and stop the flow of gasoline.
6. Reset the check valve by closing the shut-off valve. Tap the tank on the ground to shake down the ball check.

WARRANTY

If any PETROGEN product is found to be defective in materials or workmanship, PETROGEN will repair or replace that product without charge. PETROGEN may require that the product be returned to the factory for examination. Return transportation charges will be for the customer's account; replacement transportation charges will be for PETROGEN's account. This warranty is without time limit.

STANDARD PACKAGE CONTENTS

As you unpack your **PETROGEN** **Standard Package Part 100** you will find the following items included:

- Torch, 20 inch with 90 degree head (Other torch sizes are available.*)
- Gasoline tank of 2.5 gallons
- 2 Cutting tips, sizes of your choice (See tip chart next page.)
- Gasoline hose assembly, 20 feet
- Oxygen hose assembly, 25 feet
- Oxygen backflash arrestor
- Parts kit (part 4002)
- Tool kit (part 4003)
- Spark striker
- Reference Manual
- "Getting Started" color chart
- Training Video

* Torches can be provided with any combination of the following torch lengths and head angles:

- Torch lengths: 14, 20, 27, 36 and 48-inches. (Longer lengths can be made to order.)
- Head angles: 75, 90 and 180 degrees.

Part 100/50 - Standard Package with 50 ft. gasoline hose and 50 ft. oxygen hose.

Part 100/100 - Standard Package with 100 ft. gasoline hose and 100 ft. oxygen hose.

(Other hose lengths can be made to order.)

CUTTING TIP SELECTION CHART

Tip No.	Inches of Steel
0	0 - 1/4”
1 & 81*	1/4 - 1”
2	1 - 2”
3 & 83*	2 - 4”
4	4 - 6”
5	6 - 8”
6	8 - 10”
7	10 - 12”
8	12 - 14”
“L” Heating tip “R” Rail cutting tip	

* Scrapping Tips 81 and 83 have the cutting capacity of 1 and 3 tips respectively, but the preheat of an 8 tip. Used for fast ignition on dirty or heavily rusted steel.

CONTENTS OF PARTS KIT:

- mixer with wick and O-rings
- pre-heat oxygen valve
- high pressure oxygen valve
- external O-ring for high pressure oxygen valve
- internal O-rings for high pressure oxygen valve
- installation tool for internal O-rings
- lever nut
- lever screw
- 2 metal wicks
- 1 set O-rings for mixer
- filler cap gasket
- leather pump cup
- flat seal for pump check valve
- extra flint for sparker

CONTENTS OF TOOL KIT:

- tip shell reamer
- tip brush
- jack screw
- packing nut wrench
- hex allen wrench
- tip drill set

HEAVY RESCUE UNIT

Heavy Rescue Unit 6050 contains:

- 27 inch 90 degree torch
- 2 cutting tips (81 & 83)
- Petrogen 2.5-gallon fuel tank
- 50 foot gasoline hose
- 50 foot oxygen hose
- Spare parts kit
- Tool kit
- Oxygen backflash arrester
- Spark striker
- Reference Manual
- “Getting Started” color chart
- Training Video

Part 6050 is recommended for extensive steel cutting in a heavy rescue situation.

The following optional equipment is recommended for use with Part 6050:

Part No. 6051 Optional Heavy Rescue Auxiliary Package:

- #5 Cutting tip
- Oxygen regulator, part no. 3130
- 2 quick disconnects, gas, part no. 3013
- 2 quick disconnects, oxygen, part no. 3119
- Petrogen hand cart, part no. 4560

PORTABLE CUTTING SYSTEM (PCS)

PCS Part 6000 contains:

- Plastic carry case, with harness, scabbard, handle
- 20 inch 90 degree torch
- 3 cutting tips: 81, 83 & 5
- 20 foot gasoline hose
- 20 foot oxygen hose
- 2 quart gasoline tank
- 2 gasoline quick disconnects
- Oxygen backflash arrester
- 2 oxygen quick disconnects
- Spare parts kit
- Tool kit
- Spark striker
- Protective shaded glasses
- Welding gloves
- Adjustable wrench
- Pigtail for filling CGA 540 industrial oxy bottles
- Adaptor for filling and using CGA 870 medical oxygen bottles
- CGA 540 industrial oxygen bottle
- CGA 540 industrial oxygen regulator

Part 6000 PCS is recommended for short-term steel cutting where portability is important. We can furnish all items, including the oxygen cylinders.

Loaded weight is 45 pounds. Cutting time is limited by oxygen supply. The 23 cu. ft. oxygen bottle permits continuous cutting of 1/4-inch steel for about 25 minutes, 1-inch steel for 13 minutes, or 4-inch steel for 5 minutes.

If you run short of oxygen you can substitute your normal medical oxygen bottle (Jumbo D) which has the standard CGA 870 valve. Your medical oxygen bottle can be filled and used with the torch system by installing the included adapter between the medical bottle and the industrial oxygen regulator.
See detailed instructions included with the PCS unit.

Part No. 6000E contains all of the above items except for:

- Glasses, part no. 6020
- Gloves, part no. 6021
- Adjustable wrench, part no. 6022
- Filler pigtail CGA 540, part no. 6023
- CGA 540 industrial oxygen bottle, part no. 6040

INSTRUCTIONS FOR INITIAL USE

These instructions will guide you through your initial set-up of the PETROGEN System. Please read these instructions all the way through before lighting up the torch.

Because PETROGEN uses liquid fuel, lighting the torch and adjusting the flame require different techniques than are used with compressed gases. After you are thoroughly familiar with this start-up information, use the "Quick Reference Guide" on page 11 for fast reference.

System Set-up

1. Unpack your system, and check each piece against the packing slip to ensure that you have received all components.

2. Take the tank to a national brand gasoline station. Unscrew the filler cap. Fill the tank with 2.5 gallons of regular grade gasoline. Never use gasoline that might be old or contaminated. Leave 2 inches (5 cm) of air space so that you can pressurize the tank. Ethanol added to gasoline in the amount set by federal regulations will not interfere with torch operation.

3. You will notice that there is no regulator on the tank as there is with acetylene. Instead, the PETROGEN system has a built-in hand pump and a pressure gage on the tank. Pump up the gasoline tank pressure to 20 psi using the hand pump on the tank. When the pressure goes down to 10 psi, pump back up the 20. Never work with tank pressure lower than 10 psi. This ensures that the fast flow check valve will function if hose is ruptured.

4. Select a cutting tip according to the "Cutting Tip & Pressure Chart" decal on the gasoline tank. (Chart is also on page 13 of this manual.) Install the tip and tighten the tip nut to about 15 foot-pounds.

5. Connect the red and green hoses to the torch. Connect the other end of the green hose to the oxygen regulator. Use a high-flow regulator. Connect the other end of the red hose to the gasoline tank valve. All torch and tank valves should be closed at this point.

◦ You will notice that no backflash arrestor is needed on the fuel line. We include an oxygen backflash arrestor with the unit and recommend its use.

Lighting the Torch

1. Open the oxygen bottle valve slowly and fully. On the oxygen regulator, set the secondary gage to the desired pressure according to the chart on page 11 and on the gasoline tank.

2. Open the gasoline valve on the tank about two turns. The tank has a fast-flow check valve. Opening the gasoline valve too quickly will cause the check valve to shut off the fuel flow.

   (If the check valve shuts off, close the fuel valve at the top of the tank and tap the tank on the ground a few times. This will reopen the check valve.)

3. Open the tank gasoline valve fully when the fuel line has been pressurized. There is now liquid gasoline running from the tank, through the hoses, to the tip in the torch head.

   IMPORTANT: MAKE SURE THE TANK GASOLINE VALVE IS FULLY OPEN DURING USE. This ensures operation of the fast flow check valve in case of fuel hose rupture.

4. PURGE THE OXYGEN HOSE BY DEPRESSING THE HIGH PRESSURE OXYGEN LEVER FOR AT LEAST 5 SECONDS. This purges any gasoline vapors that might be present in the oxygen line. Purging of the oxygen line is required for all oxy-fuel cutting torches.

5. Open the pre-heat oxygen valve on the torch about 1/2 turn. Final setting depends on tip size and oxygen pressure selected.

6. Open the torch gasoline valve at the butt of the torch SLOWLY until you see a light mist. There should never be any gasoline dripping from the torch. If gasoline drips, increase the pre-heat oxygen or decrease the gasoline.

7. Purge oxygen line again.

8. Strike a spark very close to the tip and to one side to ignite the mixture. Don't hold the sparker for too long in the mist or it will get wet and will not light.

On first use, new gasoline hose contains air which must be bled out. An air bubble may extinguish the flame 2 or 3 times before the line is bled.

After the bubble passes through the tip the mist will appear again. Light the mist and wait for the next air bubble. When flame is steady, then the pre-heat flame can be adjusted. This process needs to be done only when first starting up or after the hose has been emptied.

Note: New gasoline hose may contain oily residue from the manufacturing process. It may cause the flame to be yellow for the first 5 to 10 minutes after lighting until the residue is cleaned out of the 20-foot hose. Longer hoses will need more time to clear this residue.

Flame Adjustment

1. When the torch is lit, do not attempt to adjust the flame but immediately press the tip to the steel surface at a slight angle for about 4 seconds to heat the tip. This warms the tip sufficiently to vaporize all the gasoline passing through.

   There is no danger of backflash up the fuel line with the PETROGEN torch as there is with acetylene, because the liquid fuel will not allow a flame front to enter the torch.

2. With the tip still pressed to the steel, adjust the flame by opening and closing the torch gasoline valve. Watch the steel react to the flame as the mixture changes. When the steel reacts with the brightest orange and red color, then adjustment is optimum. The final blue flame should be 3/16 inches long.

3. Another test for a properly adjusted flame is to press the tip to steel at a slight angle and get an orange sunburst with the rays about 2 inches long, again with the steady, mild roar.

FLAME PATTERNS

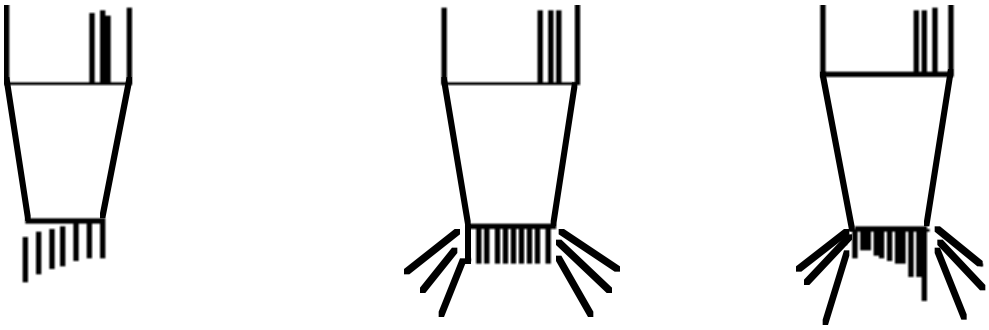

Too Little Gasoline	Balanced Flame	Too Much Gasoline
* no canopy	* canopy	* canopy
* hissing sound	* roaring sound	* wavering blue core
* flame about to separate from tip	* dark blue core 3/16" (4 mm)	* streaking yellow

Smaller pre-heat flames give sharper kerf edges. Larger pre-heat flames may permit faster cutting. We recommend the blue inner core of the flame be 3/16-inch (4 mm). A properly adjusted pre-heat flame will result in very fast ignition of the steel.

With experience, warming the tip and adjusting the flame can be done at the same time in just a few seconds.

Note on Setting Pressures: Follow the "Cutting Tip & Oxygen Pressure Chart" carefully at first. Although these suggested oxygen and gasoline pressure settings have a great deal of flexibility, too much divergence from recommended pressures will result in unacceptable performance.

Shutting Down

1. **Close the torch gasoline valve first.**

2. **Then close the torch pre-heat oxygen valve.**

3. After the torch is shut down, check to make sure the tank filler cap is closed and the tank shut-off valve is closed. Leave the tank, torch and hose connected for storage. If fuel lines must be disconnected, quick disconnects can be used so that the fuel line does not need to be bled each time the torch is used.

PETROGEN

QUICK REFERENCE GUIDE

To Light & Adjust

1. Select tip and set oxygen tank pressure according to the "Cutting Tip & Pressure Chart" on page 13. (Chart also found on the PETROGEN tank.)
2. Pump gasoline tank pressure to 20 psi.
3. Open gasoline tank valve slowly at first so that the fast-flow check valve does not seat. Then open fully
4. Purge oxygen hose for at least 5 seconds by depressing the cutting lever.
5. Open torch oxygen valve about 1/2 turn.
6. Open torch gasoline valve until fine mist appears. No drops.
7. Purge oxygen line again.
8. Strike a spark close to the tip slightly to one side.
9. Press tip to steel for about 4 seconds to warm it.
10. Adjust the flame by opening and closing gasoline valve until steel reacts with the brightest orange and red color

To Shut Down

1. Shut torch gasoline valve first.
2. Then close torch oxygen valve.
3. Check to make sure tank filler cap and tank shut-off valves are closed.

1 Select tip and set oxygen pressure according to the chart on page 13 and on the tank.

Pressurize tank to 20 psi.

Slowly open tank shut-off valve 2 turns. Then open fully. Opening too fast can activate fast-flow check valve.

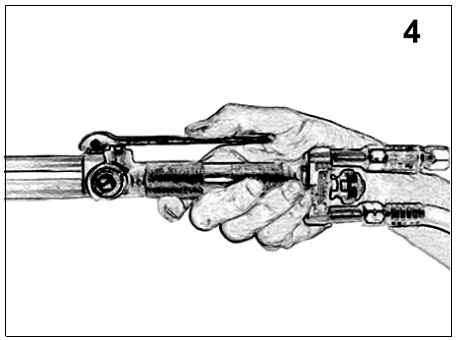

Purge oxygen line by pressing cutting lever for 5 seconds.

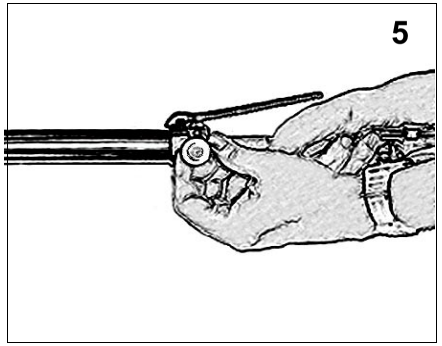

Open torch pre-heat oxygen valve approximately 1/2 turn.

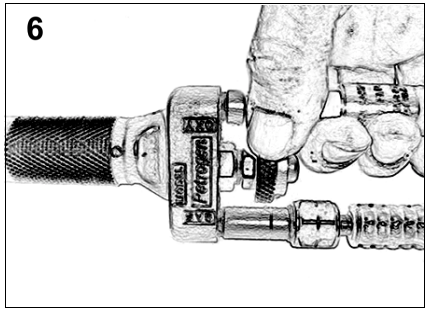

Open torch gasoline valve until light mist appears.

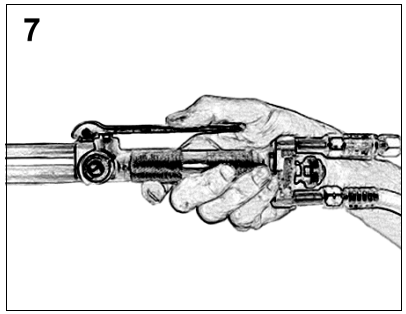

Purge oxygen line again.

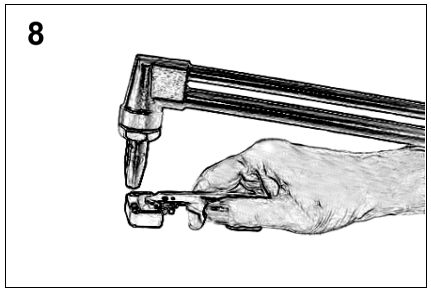

Strike spark close to the tip and slightly to one side.

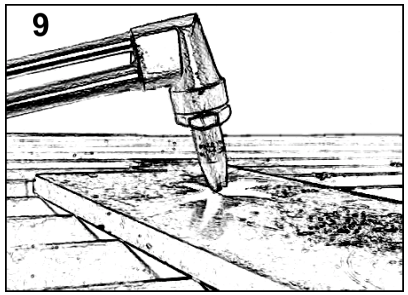

Press tip to steel and adjust gasoline valve until steel reacts with brightest orange-red color.

10 Make final flame adjustment so that dark blue flame core is about 3/16-inch long with light flame canopy around it.

CUTTING TIP & PRESSURE CHART

ENGLISH				METRIC			
INCHES STEEL	TIP NO.	POUNDS/INCH^2		MM. STEEL	TIP NO.	KPA	
		GASOLINE	OXYGEN			GASOLINE	OXYGEN
0-1/4	0	10-20	12-17	0-7	0	70-140	80-120
1/4-1	1 & 81	10-20	17-25	7-25	1 & 81	70-140	120-180
1-2	2	10-20	25-35	25-50	2	70-140	180-250
2-4	3 & 83	10-20	35-40	50-100	3 & 83	80-140	250-280
4-6	4	12-20	40-50	100-150	4	80-140	280-350
6-8	5	14-20	50-60	150-200	5	100-140	350-420
8-10	6	16-20	70-80	200-250	6	110-140	490-560
10-12	7	18-20	80-100	250-300	7	130-140	560-700
12-14	8	20	120+	300-350	8	140	800+

¥This chart shows the cutting range of each tip, and suggests gasoline and oxygen pressures. The range of each tip can be extended by higher oxygen pressures, but quality may be reduced.

¥A decal of this chart is on every PETROGEN tank.

¥The best combination of tip and pressures depends on operator technique, type and size of steel, desired cutting speed and quality of cut.

¥A good operator will keep oxygen pressure as low as possible and still do the job well.

¥These gasoline pressures are minimum. We recommend pumping to 20 psi, then allowing pressure to drop to 10 psi before pumping again.

¥Never work with tank pressure less than 10 psi. The fast-flow check valve needs 10 psi to operate properly. When operating, keep the gasoline shut-off valve fully open to ensure proper operation of the fast-flow check valve.

SAFETY FEATURES

PETROGEN is the safest oxy-fuel system ever built. Its design eliminates every major danger associated with acetylene and propane use.

- **Cannot backflash up the fuel line.** The gasoline is liquid right up into the cutting tip. Liquid gasoline can not burn. It is not possible to have a fire in the fuel line.

- **Fuel leaks can be detected.** Fuel from any leak, pinhole, or open valve can be SEEN and corrected.

- **Only low pressure needed in the tank.** Tank pressure of 10-20 psi is all that is required. The purpose is only to deliver the gasoline to the cutting tip. Inside the cutting tip the gasoline expands from liquid to vapor, resulting in a volume expansion of 160 times. It is this expansion which gives force to the pre-heat flame and makes it very difficult to extinguish the PETROGEN flame.

- **Fast flow check valve in the tank shuts off the fuel in case of a fuel hose rupture.** A cut hose results in a surge of fuel flow, which activates a floating ball check in the gasoline outlet valve.

- **The ASME code gasoline tank has a pressure relief valve which opens at 35 psi.** A Petrogen tank caught in a fire will vent off the vapor coming from the heated gasoline inside. The liquid gasoline inside the PETROGEN tank is inert and will not respond to heat or shock. An acetylene tank caught in a fire is a latent bomb.

- **Check valves in the tank prevent gasoline spillage.** There are check valves under the pressure gage and inside the outlet valve that activate in case the gage or valve are accidentally broken off.

- **Tips and torch heads run cool.** The gasoline evaporates in the tip which makes the tip a refrigerator. Tips and head run much cooler than any other torch, presenting reduced hazard to the operator. Tips resist melting to a great degree, adding to long tip life.

- **Sparks are cool and light.** Gasoline is 100% oxidizing to steel. The steel is completely burned out and the sparks have little weight or heat, resulting in reduced hazard. Acetylene is only 70% oxidizing, leaving 30% of the steel molten, heavy and hot.

Safety Certifications

- **Listed by Underwriters Laboratories**
- **Tested and Recommended by the U.S. Dept. of Energy**
- **Safety Certified by:**
  - **U.S. Navy**
  - **U.S. Coast Guard**
  - **Lloyd's Register of Shipping**
  - **GS Certificate (BAM, Germany)**
- **Deemed suitable by MSHA for use in all mines, including underground coal mines**

PERFORMANCE

The PETROGEN system out-performs all other oxy-fuel systems, cutting faster, cleaner and more efficiently. Many jobs you could not do with other torches PETROGEN will do quickly and safely. Here is the kind of performance you can expect from your PETROGEN torch:

Cut steel faster: PETROGEN cuts 2 to 4-inch steel twice as fast as acetylene, and up to 4 times faster than acetylene in the to 8 to 10-inch range. In thin steel up to about 1/4-inch, PETROGEN will cut at about the same rate as acetylene, but will not be slowed down by most surface contamination.

Because the oxy-gasoline flame carries the heat deeper and faster into the steel, you can make these cuts:

- 4-inch shaft in 30 seconds,
- 6-inch shaft in 90 seconds,
- 12-inch shaft in 3 minutes,
- punch a straight hole through a 10-inch shaft in one minute.

Work more efficiently: Burners have greater freedom of movement and positioning while using the torch because it **cannot backflash up the fuel line**, even if the tip is pressed onto the steel surface or into the ground. Also, the torch produces **less harmful sparks** for burners to contend with. The 100% oxidized slag is light weight and carries much less heat than acetylene slag.

Cut layers: To cut stacked plate, the starting edges should be lined up as evenly as possible and ignition should be obtained down the entire stack before attempting to move into the cut. After total ignition is obtained, the cut proceeds at almost the same speed as cutting a solid piece of steel. Wire rope is cut easily.

Cut across air gaps: The PETROGEN torch has the amazing ability to bridge multiple gaps up to 1/2 inch each, and even larger single gaps. Measure the height of the stacked plate and consult the cutting chart. Select the next larger size tip. Sometimes the second or third larger tip must be used. For example, 18 layers of stacked 1/4 inch (6 mm) plate measuring 7 inches (18 cm) are cut nicely with a no. 7 tip at 90 pounds (630 kpa) oxygen.

Long coupling distance: The flame has a large coupling distance. The tip can be raised high above the steel surface and still keep cutting all the way through the steel.

No grinding: The PETROGEN flame oxidizes the steel 100% so there is no molten steel in the slag. Cuts are clean and never need grinding. (Acetylene oxidizes only 70% of the steel. That means 30% remains as molten steel to re-form on the steel surfaces.)

Punch holes: The PETROGEN system can blast through 10 inches of armor plate in 50 seconds. Oxygen pressure is critical in punching holes. Not only must cutting proceed down into the hole, but there must be enough oxygen

pressure to blow the slag back out through the top until the hole is blown through. Up to 3+ inches (8+cm) of steel is easily punched with a no. 3 tip at 55-60 pounds (420 kpa) of oxygen.

Deeper holes require at least one tip size larger than normal and also need higher oxygen pressures. The problem increases rapidly with the increasing depth of the hole. Maximum capability is a 10 inch (25 cm) hole blown with a no. 8 tip at 140 pounds (980 kpa) oxygen. Too much oxygen may cool the steel to the point where ignition is lost.

To start the hole: When you see some steel begin to melt, press the cutting lever slowly. As the molten slag comes out of the hole, move the tip carefully towards you so that the slag is ejected opposite from you. Then press the cutting lever fully. This will result in the burning slag blowing away from you, and keeps you free of sparks. Hold the torch steady in this new position. **Lift it vertically if you see slag building up towards the tip. Do not let the tip enter the hole.** The hole will proceed to burn directly downwards.

Contaminated steel surfaces: PETROGEN's totally oxidizing flame burns and blows steel clean, even when covered with dirt, rust, paint or barnacles. The steel is cleaned and cut with the same pass of the torch. For maximum speed through a contaminated surface, we recommend our 81 or 83 tip. See page 51 under "high heat scrapping tips" for more information on these tips.

Concrete-backed steel and rebar: With conventional torches, cutting into steel that is backed with or embedded in concrete results in explosions and molten-steel spray that makes this work dangerous. PETROGEN does the job smoothly and quickly without any popping.

Stainless-backed steel: Because of PETROGEN's total oxidation, deep penetration, and fast heat release, mild steel backed with stainless steel is cut without difficulty. What it doesn't cut, it melts.

Sheet piling: Interlocking sheet piling often must be cut horizontally after being driven to desired depth. Cutting across the knuckle joint presents a problem that is formidable for most torches, but easily solved by PETROGEN. One common sheet piling system has knuckle joints that are about 3 inches thick. The joint consists of 3 layers of steel separated by 2 layers of very difficult dirt, gravel, mud, etc. The PETROGEN no. 5 tip at 60 or 70 pounds oxygen will continue its cut right across this joint with only a nominal drop in speed. A slight "sawing" motion may be required to maintain ignition.

Alloy steels: Some alloy steels can be cut with PETROGEN. For example, manganese steel such as used in high quality dipper teeth and cutting edges yields easily to PETROGEN. Low grade stainless steel with up to 10% nickel or 5% chrome also yields. Cast irons come in many formulas; the PETROGEN torch cuts some types easily, some with difficulty, and some not at all. A general rule of thumb is that whatever an acetylene torch might do against a cast steel or iron, PETROGEN can do better. Larger tips and higher pressures may be needed in some cases.

Galvanized steel: Toxic fumes are generated by cutting galvanized steel. With other cutting systems, these fumes are heavy, dark and ominous, but with

the PETROGEN system the fumes are enormously reduced. Breathing protection is of course still recommended.

➢ **Cut under water, mud, dirt:** The powerful flame resists being extinguished, even in water, mud and dirt. It can cut into a pressured water pipe and keep on cutting. The PETROGEN torch can be adapted for underwater cutting with a special tip and shroud.

➢ **Hot and cold weather:** Hot weather use is not a problem. In fact, if the weather is very hot, PETROGEN will be able to make cuts using diesel fuel. Cold weather is not a problem. In sub-freezing temperatures it may take more than the normal 4 seconds to warm the tip, but there is no general interference with operation.

➢ **Tips run cool, do not clog:** Because there is no molten steel in the slag, tips will never clog and can last for years with reasonable maintenance. There is a refrigeration effect in the torch head as the gasoline evaporates in the tip. Head and tips run much cooler than other torches.

➢ **Cut with 90% pure oxygen:** PETROGEN is the only oxy-fuel torch that can cut steel with impure oxygen produced by oxygen generators using the nitrogen adsorption process. These generators can produce oxygen 24 hours a day, and bottles can be filled for delivery to remote work sites. If you are interested in this type of oxygen generator, contact us for the names of suppliers.

➢ **Liquid oxygen:** PETROGEN performs the same, regardless of the oxygen source. However, the smaller sizes of liquid oxygen bottles have a rather low limit to the amount of oxygen that can be passed, about 300 Standard Cubic Feet per Hour (SCFH). To get more oxygen from a liquid source, see your oxygen supplier.

Note: The PETROGEN torch cannot be used for welding because of its 100% oxidizing flame. This complete oxidation of steel is what makes PETROGEN a superior cutting tool.

HINTS ON CUTTING

Igniting the Torch

Gasoline is hard to ignite. That helps make it a safer fuel, but it also requires a little practice on igniting technique. First open the pre-heat oxygen valve about 1/2 turn, then open the gasoline valve until you see a fine mist. (You should not see drops.)

Do not hold the sparker directly in front of the tip. It will get wet with gasoline and will not spark. Instead, hold the sparker to one side, but very close to the end of the tip. At the same time you make a spark, move the sparker into the mixture, “throwing” the spark into the stream.

If there is not enough gasoline, striking the spark will not ignite the torch because the oxygen will blow the gasoline mist away. If there is too much gasoline, striking the spark will result in a flame that is too yellow and possibly dripping with excess fuel. The correct valve settings depend on the tip size and the oxygen pressure. With experience, you will know from sight and sound when the mixture is in proper balance and of proper volume.

Warming the Tip

Before doing anything else after lighting the torch, **warm the tip**. Do not try to adjust the flame until the tip is warm. When the tip is cold, gasoline is not completely vaporized and the flame has many yellow rays. After the tip gets warm, the gasoline is completely vaporized inside the tip and the flame becomes blue.

To warm the tip, ignite the flame and lightly hold the tip against a piece of steel at a slight angle. (In the very large tip sizes just hold the tip close to the steel without touching.) In about 4 seconds, lift the tip and the flame should be devoid of yellow.

If yellow is still there, warm the tip again for 8 seconds. If heavy yellow persists, reduce the gasoline flow or increase the oxygen flow and warm again. If you cannot eliminate the yellow, the gasoline may be contaminated or old. Fill the tank with regular grade gasoline from a national brand station. A slight trace of yellow at one side usually means a small particle of dirt. To clear the dirt, hold the tip flat against the steel and raise the side where the yellow trace originated.

Adjusting the Pre-heat Flame

The pre-heat flame must be visibly enriched with fuel. An “oxy-acetylene” adjustment is too lean. A properly adjusted pre-heat flame will result in very fast ignition of the steel.

Adjust the flame by holding the preheat oxygen valve open at 1/2 turn. While holding the tip on the steel, open and close the gasoline valve until the steel reacts with the brightest orange and red color. This is the well balanced flame. Make readjustments in order to bring the length of the dark blue flame to 3/16 inch.

The most common mistake is a flame too lean. If there is no canopy and the flame has a hissing sound instead of a roar, then increase the gasoline.

Smaller pre-heat flames give sharper kerf edges. Larger pre-heat flames may permit faster cutting. A balanced pre-heat flame can be achieved at all levels of power.

With experience, warming the tip and adjusting the flame can be done at the same time in just a few seconds.

Setting Pressures

There is a decal chart on the gasoline tank giving tank and oxygen pressures for steel thickness and tip sizes. The same chart is on page 13 of this manual. Follow the pressures given in this cutting chart carefully at first. Although each suggested setting has a great deal of flexibility, too much divergence from recommended pressures will result in unacceptable performance.

Gasoline Tank Pressures: The listed gasoline pressures are minimum. We suggest pressuring the gasoline tank to 20 psi and then pumping up again when pressure falls to the minimum (10 psi). Never work with tank pressure lower than 10 psi. Gasoline pressures are not critical.

A need for more gasoline pressure becomes obvious when opening the torch gasoline valve does not produce any effect. **THE PRESSURE GAGE MUST READ OUT OF THE RED ZONE**. This will ensure operation of the fast flow check valve in the tank.

Elevation: Gasoline pressure at the torch is affected by elevation above the tank. When the difference in elevation approaches 30 feet, compensate by increasing the tank pressure. Above 30 feet, either take the tank with you or install the tank automatic pressure kit (part no. 2349), to be used with the compressed air carry tank (part no. 2365).

Oxygen Pressures: Oxygen pressure requirements are more complicated than gasoline pressures. The cutting chart is a good place to start, but final oxygen pressure depends on the steel, surface conditions, thickness, operator technique, desired speed, desired quality, and many other factors.

Cutting Speed

The powerful PETROGEN torch cuts faster than an acetylene torch. The higher speeds are more obvious as the steel becomes thicker. In 1-inch steel PETROGEN cuts 20% faster. In 2 to 4-inch steel PETROGEN cuts twice as fast. In 10-inch steel PETROGEN cuts 4 times faster. There are several reasons for this greater productivity:

1) The acetylene flame is only 70% oxidizing, leaving 30% of the cut steel to freeze to solid again. The gasoline flame is 100% oxidizing, leaving a clean cut with no chipping or grinding required. “Cutting” is actually a burning or oxidizing process and the 100% oxidizing nature of the gasoline flame greatly assists the cutting process.

2) Gasoline vapor is 4 times heavier than acetylene vapor. With the pre-heat flame lit, pressing the cutting oxygen lever reduces oxygen supply to the pre-heat flame. Therefore, some of the gasoline vapor remains unburned in the pre-heat flame but travels down into the cut with the cutting jet oxygen. As the fuel travels down the jet it continues to burn, giving off more heat while deep into the cut. With acetylene this secondary combustion is limited to about 2 inches, but with the heavier gasoline fuel, secondary combustion goes deep into the steel. Cutting with gasoline is like cutting with the long edge of a hot knife.

3) The oxy-gasoline flame temperature is 5200 degrees F. The gasoline flame releases its heat energy faster and heats the steel faster than acetylene. Though the acetylene flame is slightly warmer (5600 F), it is the gasoline flame that brings steel to ignition faster and continues to cut faster.

PETROGEN does not issue a chart of cutting speeds. It is our opinion that speed charts are inaccurate at best and misleading at worst. In any given situation, cutting speed depends on many variables: type of steel; thickness of steel; surface conditions; size of cutting tip; size of pre-heat flame; oxygen pressure; operator skill; quality of cut; torch hand-held or machine mounted.

A change in any of these variables will have a large effect on final speed, but may also have several other effects as well. For example, using a larger tip may increase speed, but will also significantly increase oxygen consumption and may have an adverse effect on quality. Operator skill must be tuned to obtain maximum speed at desired quality with minimum oxygen consumption.

OPERATING COSTS

The cost of doing a certain amount of cutting is the cost of:

Fuel + Oxygen + Labor + Maintenance.

Fuel: Gasoline is the cheapest fuel, except for natural gas used in permanent installations. The cost of fuel can be expressed in terms of cost per BTU, because the quantity of steel cut by any fuel is directly proportional to its BTU content. One gallon of gasoline does the work of 100 cubic feet of acetylene. All pure hydrocarbon fuels have about 21,000 BTU's per pound, so relative costs are in the same proportion as relative weights. In the United States, gasoline is about 90% cheaper than acetylene and about 50% cheaper than propane.

The low cost of gasoline is just the first of several savings that can be credited directly to "fuel". If the job shuts down because the acetylene or propane supplier fails to deliver fuel on time, the cost of an entire day's production can rightfully be charged to fuel. Gasoline, on the other hand, is delivered by the best fuel distribution system in the world and can be obtained anywhere, any time. It is probably available in the truck that took the work crew to the work place. Additional "fuel" costs chargeable to acetylene are cylinder delivery and demurrage charges. Accidents from handling the very heavy acetylene tanks can also be charged to fuel, and also accidents from acetylene backflashes can be considered as fuel costs.

Oxygen: In any fuel system, oxygen is a significant cost and its consumption must be watched and controlled. Oxygen consumption is largely under the control of the operator. An unskilled operator can easily use 2 or even 3 times as much oxygen as necessary. (See "Oxygen Consumption" below.)

Assuming that the operator is skilled, oxygen consumption will vary among the different fuel systems. Most acetylene operators will agree that the oxygen/fuel ratio is about 3+ to 1. That is, for every 250 cubic foot bottle of acetylene, the operator will use about 900 cubic feet of oxygen. Different fuels have different chemistries of combustion, and a cost analysis must consider this. It is found that the PETROGEN system uses the same amount of oxygen as does acetylene. It is also found that the propane system uses about 25% to 30% more oxygen than does acetylene. Switching from acetylene to gasoline does not affect oxygen costs, but switching from propane to gasoline reduces oxygen costs considerably.

Labor: The way to save labor cost is to increase productivity. The way to increase productivity is to increase cutting speed. If an operator doubles his production, he reduces his cost in half. The PETROGEN system is amazingly fast. Heavy steel pieces do not have to be soaked with heat before cutting. Ignition is the fastest. The clean cutting action eliminates chipping and grinding. Speed is up to 4 times faster than acetylene. The thicker the steel the faster the comparative speed of PETROGEN. Dirty or rusted surfaces that slow down other systems have less effect on PETROGEN speed. Many unusual cutting problems that materially affect other systems are easily handled by PETROGEN.

Maintenance: Maintaining a cutting torch system is relatively low cost. It does not vary much among the higher quality torches of the different systems, except for the factor of cutting tip life. The PETROGEN tip has an extraordinary long life, many serving a year or longer, even in rough daily usage. PETROGEN tips will not clog and will greatly resist melting - the 2 most common causes of tip failure. Savings can be significant. (See "Long Tip Life" below.)

OXYGEN CONSUMPTION

The PETROGEN system uses about the same amount of oxygen as the acetylene system, cut for cut. The PETROGEN tank of 2-1/2 gallons is the equivalent of the large acetylene tank holding 250 cubic feet. Both the PETROGEN tank and the acetylene tank use about 900 cubic feet of oxygen. Oxygen consumption depends on a number of factors.

1). Consider how much steel has been cut, not how long the torch was lit. The PETROGEN torch does more work in less time so a higher rate of oxygen consumption can be expected. This is offset by a speed of up to 4 times faster.
2). Select the smallest tip that does the job well.
3). Use the lowest oxygen pressure that does the job well.
4). Adjust the pre-heat flame to the smallest that does the job well.
5). Avoid unproductive time when the torch is lit but not cutting.

OXYGEN CONSUMPTION CHARTS

CUTTING TIPS

Pre-heat and cutting oxygen both on.		
Cutting Tip Size	Oxygen Pressure (psi)	Standard Cubic Feet per Hour (SCFH)
0	15	60
1	20	115
2	30	180
3	40	275
4	50	370
5	60	490
6	70	620
7	90	800
8	120-200	1400

HEATING TIP

Adjusted to a large flame.		
Heating Tip Size	Oxygen Pressure (psi)	SCFH
"L"	100	95

GASOLINE CONSUMPTION

Gasoline contains about 135,000 BTU's per gallon (one gallon of gasoline weighs 6.2 pounds). A small amount of gasoline cuts a large amount of steel.

For any tip size, gasoline consumption depends solely on the size of the pre-heat flame. Adjusting from a small pre-heat flame to a large one could greatly increase gasoline consumption. The following chart is based on a reasonably-sized pre-heat flame (about 3/16 inch):

GASOLINE CONSUMPTION CHARTS

CUTTING TIPS

Tip Size	Gallons of Gasoline per Hour
0	.30
1	.30
2	.40
3	.48
4	.55
5	.60
6	.62
7	.64
8	.67

HEATING TIP

Tip	Gallons of Gasoline per Hour
"L"	1.47

LONG TIP LIFE

PETROGEN tips have a very long life, even with daily use in scrap-cutting operations. Proper understanding and reasonable care can result in tip life of as much as one year. Except for abuse and accident, the 2 reasons for failure of conventional tips are clogging and melting.

The acetylene tip is damaged when molten steel blows back and lodges in one of the tip holes. Soon, the holes melt shut and ruin the tip. This cannot happen with the PETROGEN tip. There is no molten steel, only 100% oxidized slag. Acetylene is only 70% oxidizing, while gasoline is 100% oxidizing. 100% oxidized slag does not have enough weight or heat to lodge in the tip and damage it. The PETROGEN tip is resistant to melting because the tip is always cool. Gasoline vaporizes inside the tip and, because vaporization is a cooling process, the tip becomes a small refrigerator. This strong cooling effect gives great protection against melting.

Coolness is directly proportional to the amount of gasoline being vaporized. A tip will run hotter if it is a smaller size (no. 0 & 1), if the pre-heat flame is small, or if the fuel is oily.

MAINTENANCE AND REPAIR

Tools

The PETROGEN unit comes with a tool kit containing the following items:

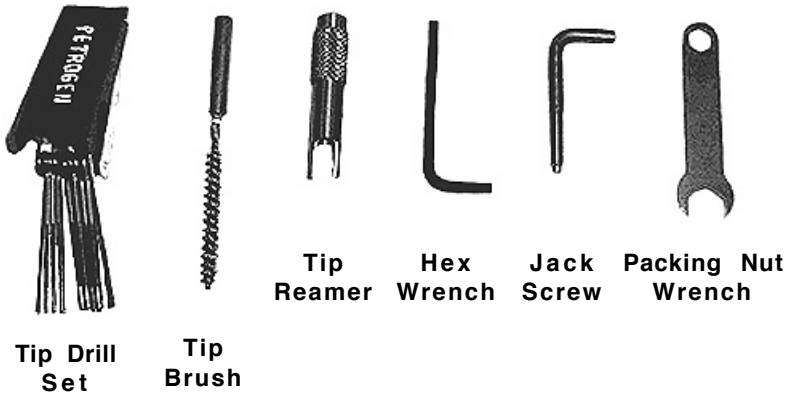

1. **Tip drill set:** cleans the high pressure oxygen path in the tip core.
2. **Tip brush:** cleans the core flutes and the shell bore.
3. **Tip reamer:** cleans carbon from inside the tip shell.
4. **Hex allen wrench:** operates the hose connectors on the torch.
5. **Jackscrew:** removes the mixer from the torch head.

Mixer

6. **Packing nut wrench:** used in the following operations:
   a. Closed hex for operating the high pressure oxygen valve nut.
   b. Open hex for operating packing nuts on pre-heat oxygen valve and torch gasoline valve. Packing nut should be tightened to stop leaks, but still permit comfortable operation.

Cutting Tips

PETROGEN tips require very little maintenance and have an extremely long life. Regular maintenance and careful use can extend the life of tips for several years.

There are 3 tools for cleaning the tip:

1. The **tip drill** is used to clean out the center bore of the cutting tip. This gets clogged only by dirt, never by slag. You will seldom need to use this tool.

2. The **tip brush** is your most important tool for good maintenance. It is used to clean the flutes of the core, the tip seat at the bottom of the core, and the inside taper of the shell where the flutes mate. A thin knife blade does an excellent job of cleaning the flutes.

3. The **tip reamer** is used to clean the inside section of the tip shell. Turning the reamer in the shell removes carbon deposits.

Leaking and Popping Tips - A leaking tip is one that leaks gasoline past the tip nut. The gasoline ignites and flame surrounds the tip nut. A popping tip is one that pops continually, one pop every few seconds or as frequently as a machine gun. A popping tip can damage the tip, mixer, high pressure oxygen valve, and even the torch head. Do not operate a tip that pops continually.

The most common cause of a leaking/popping tip is a bad fit between mixer and tip. There is both an outer and an inner seat on the 45 degree tapered surfaces. If the outer seat fails to meet, then the tip is a leaker. If the inner seat fails to meet, then the tip is a popper.

There are 2 conditions that create a bad fit between tip and mixer:

1. **Loose tip nut**
2. **Defective tip seat**

1. To Fix a Loose Tip Nut: The tip nut may become loose if the torch head gets too hot. Expansion of the brass in the torch head causes the threads in the torch head to pull away from the threads in the tip nut. The tip nut takes this opportunity to loosen. **Do not tighten the tip nut while the torch is hot**. To cool the tip rapidly, close both torch valves. Then open the gasoline valve only. The gasoline passing through the hot head and tip will vaporize immediately and throw out visible vapors. As the head and tip cool, the vapors will turn to spray, indicating that the head is now cool enough to tighten the tip nut without damage.

2. To Fix a Defective Tip Seat: First examine the tip seat for scratches, cuts and gouges. If deep scratches exist, the seat cannot be repaired. If deep scratches are not apparent, then the seating problem can be corrected by removing a small amount of brass from either the inner or the outer seat.

To correct the seating, insert the brass core of the tip into a drill press, exposing the seat. Operate the drill at about 300 RPM.

To Fix a Leaking Tip: With 320 grit emery paper, press against the **inner seat** for about 6 seconds. Cut a thin strip of emery paper in order to avoid hitting the outer seat.

To Fix a Popping Tip: With 320 grit emery paper, press against the **outer seat** for about 6 seconds.

Insert the tip into the torch and flame test it. If it still pops, repeat the emery paper process. Cutting off too much brass will convert a leaker into a popper--or a popper into a leaker.

Carbon Build-Up - Carbon can build up inside the tip, just like the carburetor of a car. This carbon comes from gasoline that is not completely burned, the result of a flame too rich for too long. If a tip is not cleaned periodically, this carbon builds up in the shell and on the core and eventually creates further problems that can destroy the tip.

Through lack of maintenance the carbon can lock the core to the shell. Then when the tip nut is removed, the twisting motion of the shell grabs the flutes of the core and twists them, ruining the core.

Until you become familiar with the rate of carbon deposit in your particular torch application, it is wise to examine your tips once or twice a week. If you neglect this maintenance you can lose the tip.

The core can also lock to the shell by operating the torch in extreme heat. Before removing a very hot tip it is best to cool it rapidly by opening only the gasoline valve. The hot tip immediately vaporizes the gasoline, which cools the tip. When the vapor changes to spray, the tip is cool. If the shell becomes stuck to the core, twist them apart by gently working them loose using two pair of pliers.

High Pressure Oxygen Valve

Broken O-ring - The symptom of a broken O-ring is a constant leak of high pressure oxygen through the cutting tip. The cause of O-ring failure is almost always a back-pop up the oxygen line.

Each tool kit comes with one installation tool and 4 O-rings. If purchased separately, the parts are as follows:

1357 internal O-ring for high pressure oxygen valve

4017 installation tool for O-ring 1357 (aluminum cone)

Installation procedure:

1. Remove cutting lever nut.
2. Remove cutting lever screw.
3. Remove cutting lever.
4. With packing nut wrench (part 4011) remove high-pressure oxygen valve.
5. Hold hex-nut of oxygen valve firmly with packing nut wrench; unscrew valve stem.
6. O-ring is located inside rim in valve stem; scrape clean.
7. Insert valve stem into installation cone and roll replacement O-ring onto rim as pictured here.

Torch Gasoline Valve

The torch gasoline control valve is a single, one-piece stainless steel rod with the needle point machined at one end. If replacement is needed, the entire gasoline valve must be ordered.

Internal Damage Requiring Disassembly at Factory

Send your torch to the factory for repair for any of the following conditions:

1. Gasoline or oxygen leaks from the weep holes in the butt handle.
2. Gasoline leaks from the compression fitting at the torch butt.
3. With the gasoline valve closed, gasoline leaks from the torch head through the 2 holes normally passing pre-heat oxygen. Looking into the torch head cavity, the 2 pre-heat oxygen holes are located a little past the deep groove from where gasoline normally exits.

WARNING: DO NOT TAMPER WITH THE COMPRESSION FITTING AT THE BOTTOM OF THE TORCH. Below the butt forging are 2 nuts. One nut under the handwheel is the packing nut for the gasoline valve. The other nut (tight against the butt forging) is the compression fitting that holds the torch together. This disassembly must be done at the factory. We urge you to send us your torches for this major repair.

Factory Repairs

The factory can repair and recondition your equipment. Contact us at the factory for return instructions.

TROUBLE-SHOOTING

Problems: Miscellaneous		
With tank and torch valves open, no gasoline exits from cutting tip.	Tank empty.	Fill tank to within 2 inches (5 cm.) from top.
	No pressure in tank.	Pressure tank to at least 10 psi.
	Fast flow check valve is shut.	Close tank shutoff valve. Bounce tank sharply on ground. This should re-set check valve. Open shutoff valve slowly.
	Obstruction in gasoline hose.	With all valves open, loosen gasoline nut at torch hose connector. If gasoline exits, then obstruction is in torch. If not, then loosen gasoline nut at tank. If gasoline exits, then obstruction is in hose.
	Obstruction inside torch.	1) Remove gasoline control rod. Examine needle point for breakage. Broken point may be lodged in valve seat in head. 2) Blow out gasoline tube with air.
	Clogged wick.	Remove mixer. Change wick.
Difficult to ignite pre-heat flame.	Mixture is too rich.	Reduce gasoline and/or increase oxygen.
	Mixture is too lean.	Reduce oxygen and/or increase gasoline.
Hard to ignite steel.	Pre-heat mixture not balanced.	Reduce gasoline and/or increase oxygen. Reduce oxygen and/or increase gasoline.
	Pre-heat flame too small.	Increase both gasoline and oxygen.
	Cutting tip not at proper distance from steel.	Move tip closer and further from steel. Look for optimum distance where steel heats fastest.
Very slow cutting	Tip too small.	Use larger tip.
	Flame too small.	Increase both gasoline and oxygen.
	Not enough oxygen pressure.	Increase pressure at oxygen regulator.
	Cutting tip not at proper distance from steel.	Move tip closer and further from steel. Look for optimum distance where cutting speed is fastest.

Opening pre-heat oxygen shuts off fuel.	Damaged tip.	Damaged tube inside copper shell. Replace tip.
Problems Prior to Lighting the Torch		
Gasoline leaks at compression fitting.	Compression fitting not seating properly at butt face.	Do not tighten. Apply thread adhesive. If leak persists return to factory for internal repair.
Gasoline leaks at gasoline hose connector.	Connector not tight in butt (right-hand thread).	Tighten with hex allen wrench. Apply some thread adhesive.
	Threads damaged.	Remove connector. Chase or clean mating threads (1/4" NPT). Wrap teflon tape and re-install. If condition persists, replace with new hose connector.
Gasoline leaks at gasoline valve packing nut.	Packing nut not tight on compression fitting.	Tighten packing nut until leak stops.
	Threads damaged.	Replace packing nut and packing.
Gasoline leaks from handle weep hole.	Internal damage: broken O-ring.	Requires internal repair. Return to factory.
Gasoline leaks in torch head from pre-heat oxygen holes.	Internal damage: copper gasket.	Requires internal repair. Return to factory.
Gasoline leaks in torch head from gasoline hole.	Gasoline needle valve does not shut properly.	Replace gasoline valve. If not cured, return to factory for internal repair.
Oxygen leaks at high pressure oxygen valve.	External O-ring damaged.	Replace O-ring (part 1356).
	Internal packing O-ring damaged.	Replace O-ring (part 1357). Inside valve under spring.
Oxygen leaks at pre-heat oxygen valve.	Packing nut not tight.	Tighten packing nut.
Oxygen leaks in torch head from pre-heat oxygen holes.	Pre-heat oxygen valve not seating properly.	Remove valve. Clean tip with abrasive paper. Blow out seat in torch. Re-install valve. If leak persists, close valve and tap sharply with light hammer. Try new valve. If valve seat in torch is damaged, torch should be returned for repair.

Oxygen leaks in torch head from bottom of head.	Damaged O-ring in h.p. valve	Replace internal O-ring (Part 1357).
	High pressure oxygen valve not seating properly in torch.	Tighten valve. If leak persists, remove valve. Remove stem. Refinish flat seat with fine abrasive paper. Blow out seat in torch. Re-install valve. Try new valve. If valve seat in torch is damaged, return torch for repair.
Oxygen leak from handle weep-hole.	Internal damage: O-ring.	Return to factory for internal repair.
Problems While Torch is Lit		
Gasoline leaks at tip nut, or torch pops.	Bad seating inside torch head between tip nut, tip, mixer & torch head.	1.) Loose tip. 2.) Bad tip seat. Try another tip. If both tips leak or pop, replace the mixer.
Torch pops once. Flame dies but may continue inside tip.	Probably isolated occurrence. Flame exit temporarily.blocked.	1. Close pre-heat oxygen valve. 2. Quickly open again. 3. Purge oxygen line. 4. Re-ignite torch.
Pre-heat flame always yellow.	Mixture too rich.	Increase oxygen and/or decrease gasoline.
	Gasoline polluted by oil or diesel or alcohol.	Rinse tank and fill with regular grade gasoline from a national brand station.
	Gasoline polluted by residue in new hose.	Run torch until yellow disappears. (About 10 minutes.)
	Not enough oxygen. getting to tip.	Check oxygen regulator: wrong pressure; bad regulator. Check oxygen supply.
	Cutting tip cold.	Heat the tip.
Yellow jet flame	Dirt in jet hole.	Ream hole with tip drill.
Pre-heat flame fluctuates or dies.	Gasoline needle valve not seating.	Spin needle point inside abrasive paper. Replace valve. If all fails, return to factory.
	Air entering fuel system.	Tighten all hose nuts and all packing nuts.
	Clogged wick	Replace wick in mixer.
	Oxygen getting into fuel system.	Copper gasket in torch head not sealing. Return to factory for internal repair.
	Mixer not seating	Try new mixer.
	Crack in gasoline shutoff valve tube inside tank.	If crack is above fuel level, tube sucks air instead of fuel. Remove valve & examine.

Flame dies when lever is pressed.	Defective new tip.	Flute cut too deep, creating opening into cutting jet passage. Replace tip. (Warranty.)
Pre-heat flame not equal around tip.	Dirt in tip flutes.	Clean tip thoroughly. If problem persists, install new tip.
Not enough gasoline flow to tip.	Tank pressure low.	Pump to proper level.
	Tank shutoff valve not fully open.	Open valve fully.
	Torch gasoline valve not fully open.	Open valve fully.
	Obstruction in tip.	Replace or repair tip.
	Obstruction in hose.	Replace hose.
	Clogged wick.	Replace wick.
	Clogged tank fuel filter.	Remove shut-off valve and clean filter.
Pre-heat flame turns yellow when cutting lever is pressed.	Oxygen pressure low.	Adjust oxygen regulator higher.
	Oxygen supply valve at bottle not fully open.	Fully open oxygen supply valves. Bottle valve may be faulty. Use new oxygen bottle.
	Too much “drawdown” of oxygen pressure.	Observe oxygen regulator while pressing cutting lever. If drawdown is large, check oxygen supply. Tanks may be near empty, or may require manifolding several together. Liquid oxygen has special problems.
	Pre-heat flame too rich.	Adjust pre-heat flame towards lean.
	Oxygen hose too small diameter.	Use larger oxygen hose. Our standard is 5/16. Try 3/8.
	Faulty oxygen regulator.	Use high flow, single-stage regulator.
	Too many torches working from same tank.	Try working single torch alone. This helps isolate problem.
Problems in the Tank		
Gasoline leaks at gasoline shutoff valve packing nut.	Loose packing nut.	Tighten packing nut.
With handwheel shut gasoline leaks from outlet of gasoline shutoff valve.	Faulty internal valve seat.	Close valve. Tap handwheel sharply with light hammer to re-seat valve. If condition persists, install new valve.

Fast-flow check does not stop gasoline flow when required.	Tank pressure too low.	Keep pressure above 10 psi (out of the red zone.)
	Shutoff valve not fully open.	Fully open tank gasoline shutoff valve.
	Can not fix problem.	Install new shutoff valve. Do not operate torch until fixed.
Tank does not hold pressure.	Tank was filled too full.	Fill tank only to 2 inches below top.
	Filler cap not shut.	Tighten filler cap.
	Air leaks from filler cap.	Remove filler cap cover. Apply leak detector solution to see if leak is at relief valve or at external gasket. If at gasket, clean or turn over or replace. If at relief valve, increase pressure by screwing in steel pressure plate. Be sure valve still relieves at proper pressure. If leak persists, dismantle valve and clean, turn over, or replace viton seal.
	Gasoline leaks past pump cylinder check valve seal.	Remove pump cylinder and replace check seal.
	Leak from gasoline shutoff valve.	If valve can not be made to close, replace with new valve.
	Leak at pressure gage.	Locate leak with leak detector. Repair or replace as indicated.
Gasoline will not exit from tank.	Tank is empty.	Fill tank.
	Shutoff valve is closed.	Open shutoff valve fully.
	Fast-flow check valve (inside shut- off valve) is still closed.	With valve closed, re-set check valve by bouncing tank on ground, or tapping valve lightly at side with wrench.
	Tank not pressured.	Pressurize tank.
	Crack in shutoff tube inside tank above fuel level.	Test by filling tank to very top. If gasoline now flows from shut- off valve, then gasoline level has covered crack in tube. Continue to deliver gasoline until delivery stops. Crack is at this level. Replace entire valve.
Pressure gage does not work.	Pressure gage broken.	Install new pressure gage.
	Check valve under gage has not re-set and air can not reach gage.	Open filler cap to release tank pressure. Bounce tank on ground to drop ball check. Pressurize.

Tank will not pressurize.	Filler cap not tight.	Tighten filler cap.
	Shutoff valve open.	Close shutoff valve.
	Leather pump cup not compressing air.	Remove pump shaft assembly. Rub a few drops of oil into the leather and open it wide.
Pump handle rises by itself, or gasoline leaks from pump cylinder cap.	Gasoline leaks past pump cylinder check valve seal.	Remove pump cylinder and replace check seal.
	Crack in solder between cylinder and base plate.	Resolder or request warranty replacement.

GENERAL TROUBLE-SHOOTING PROCEDURES

1. Check torch for internal leaks:
   a. Remove tip and mixer.
   b. Close torch valves.
   c. Check for gasoline leak inside head, and at handle weep holes.
   d. Check for oxygen leaks by immersing head in water, then immersing handle weep holes. Weep holes are located at side of butt forging.
   e. If leak persists, return torch to factory for repair.

2. Change the gasoline. Do not leave gasoline in the tank longer than 4 months. Dirty or stale gasoline can prevent complete vaporization, resulting in a flame that is always yellow. In extreme cases, stale gasoline can clog the fuel filter at the bottom of the pickup tube that extends down into the tank from the gasoline shut-off valve. In such a case the flow of gasoline is greatly reduced and the flame appears starved for fuel. You may have to remove the shut-off valve and clean the sintered bronze filter.
   Note: Several customers report that the additive **Stabil** keeps fresh gasoline fresher, longer.

3. Clean the gasoline tank. You may have dirt or water inside. Rinse the inside of the tank with a few cups of gasoline.

4. Tighten the hose connectors on the torch. They may be loose. Use the hex wrench (included with tool kit) to do this.

5. Tighten the packing nuts on the torch. There are two: the pre-heat oxygen valve and the gasoline valve. Also tighten the packing nut on the tank gasoline shut-off valve.

6. Tighten the high pressure oxygen valve on the torch. Gentle torque is sufficient.

7. Remove the mixer from the torch head. Use the jack-screw. Examine the mixer to see if the conical seating surfaces are clean and not damaged. Examine the mixer O-rings and wick.

8. Examine the tip to see if the seat is clean and not damaged. Service the tip by using the tip brush, shell reamer and tip drill.

9. Clean the inside shoulder of the tip nut. Tighten it on the tip with a torque of about 15 foot-pounds.

10. Remove the gasoline valve from torch. Examine the needle point for damage.

11. Carefully follow the Lighting Up and Flame Adjustment procedures.

FLAME CONTROL PROBLEMS

Virtually all flame control problems can be traced to one or more of the following: **1)** contaminated gasoline **2)** dirty tip **3)** faulty fit between torch head and conical mixer and tip seat **4)** faulty fit between tip seat and conical mixer **5)** Faulty fit between gasoline control rod and valve seat in torch head.

1) Contaminated gasoline: Oil contamination produces a yellow flame that refuses to burn blue. Empty the tank and fill with gasoline known to be free of oil. Dirt in the gasoline can clog the wick and stop the gasoline flow. Water can create rust that will pass to the wick and clog it. To keep the tank free of dirt, rust and water, empty and refill about once every 4 months. Do not use diesel fuel. Do not use gasoline with more than federally mandated ethanol added. NOTE: As previously mentioned, a new gasoline hose may have some residue left from the manufacturing process. Fuel coming from this hose will be yellow and very oily. Run the torch for about 5-10 minutes until fuel is clear and flame is normal. Longer hoses will take longer for residue to clear.

2) Dirty tip: 1) Turn tip reamer inside the copper tip shell. 2) Use tip brush inside tip shell and along the flutes of the brass tip core--a thin knife blade does an excellent job. 3) Brush the tip core seat where it fits against the mixer. 4) Ream the high pressure oxygen bore in the tip core with the proper size tip drill. Do not use a tip with a scarred seat. It transfers the scar to the mixer and damages the rest of your tips.

3) Faulty fit between torch head and conical mixer: Results in leaks or pops. The conical surface of the mixer can become scarred, and the head of the torch can be pressed out-of-round through abuse or accident. Our mixer design includes 2 O-rings that fill any small gap created by accident. This eliminates minor problems. If you have a problem here, try installing new O-rings. If new O-rings and/or new mixer do not solve the problem, return the torch and we can replace the head.

4) Faulty fit between tip seat and conical mixer: Can result in leaks or pops. (See page 25 for a full discussion.) The most common cause of problems here is a scar on the outer ring of the tip seat. If the torch leaks or pops, replace the tip, or the mixer, or both. For firm seating, tip nut should be torqued to about 15 foot-pounds. NOTE: Tip nuts can become loose after experiencing high heat. After hot work, check tightness after the head cools

5) Faulty fit between gasoline control rod and valve seat in torch head: Can result in a flame that dies. Try the following in sequence:

1. First check for dirt. (Dirt can enter the system while the gasoline hose is disconnected.) Remove gasoline valve and mixer. Blow air through gasoline tube.
2. Close gasoline valve hard, about 20 times. This may recover a good fit between valve and seat and restore smooth fuel flow. If that doesn't help,
3. Unscrew gasoline valve packing nut and then unscrew gasoline control rod and remove from torch. Spin the tapered needle point in 350 grit emery paper until steel is smooth. Return to the torch and close hard about 20 times.

After years of operation, wear may occur between the valve and the valve seat. A worn gasoline valve can be replaced. The female seat can be replaced.

OPTIONAL EQUIPMENT

PETROGEN offers a range of optional equipment..

Torches:

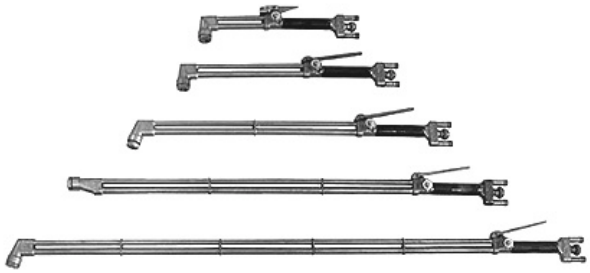

Head angles of 90, 75 and 180 degrees are available on any of the torch lengths.

Part No.	1002	14 inch 90 degree head
	1004	20 inch 90 degree head
	1005	20 inch 75 degree head
	1006	20 inch 180 degree head
	1007	27 inch 90 degree head
	1008	27 inch 75 degree head
	1009	27 inch 180 degree head
	1010	36 inch 90 degree head
	1011	36 inch 75 degree head
	1012	36 inch 180 degree head
	1013	48 inch 90 degree head
	1014	48 inch 75 degree head
	1015	48 inch 180 degree head

1003 machine torch: 18 inch 180 degree heat, 32 pitch rack. Requires torch holder p/n 4557

1016 pipe cutter torch: 13 inch 180 degree head, smooth 3-1/2 inch barrel, over-center cutting lever

1017 pipe cutter torch: 13 inch 180 degree head, smooth 8-1/2 inch barrel, over-center cutting lever

1018 rail cutter torch: 18 inch 180 degree head, over-center cutting lever, no barrel

Cutting tips are constructed of brass cores and copper shells. They are available in 9 sizes of cutting tips, 2 sizes of scrapping tips, one size heating tip, and 1 rail tip used with the rail-cutting pantograph.

Single-stage Oxygen Regulator: Single-stage high flow oxygen regulator: part 3130. Adaptor for British oxygen bottles: part 3140. Regulator with British adaptors installed: part 3135

(See additional information on oxygen regulators on page 40.)

Quick Disconnect Couplings enable you to disconnect the gasoline hose from the tank without any fuel spillage. It is a useful item for locations where operating standards require the setup to be taken apart each night for storage. If the fuel hose must be stored separately, then you need one set of quick disconnects at each end of the hose.
Gasoline Quick Disconnect, Part No. 3013.
Oxygen Quick Disconnect, Part No. 3119

PETROGEN Hand Cart: This cart has room for the gasoline tank, the oxygen bottle, and tips and tools (inside the piano-hinged tool box on top). It measures 14 x 20 x 47 inches and weighs 44 pounds. It is extremely rugged, built to endure hard service. Part No. 4560.

Tank Automatic Pressure Kit: An automatic pressurizing system is necessary when delivering gasoline to higher elevations (above 20 feet). The tank pressure required to deliver gasoline to any elevation, and still deliver 20 psi to the torch, is calculated: (.315 x E) + 20 psi = psi at the tank (where "E" is the elevation in feet). For example: at 70 feet elevation the tank pressure must be 42 psi.

The limitations of the standard hand-pumped system are:
- tank filler-cap relief-valve: 25-35 psi (16 to 48 feet)
- hand pump limited by arm strength: about 30 psi (32 feet)

For higher elevations and for underwater cutting, automatic pressurizing is necessary. An air pressure regulator replaces the hand pump.

The following parts are needed:
- 2151 tank filler-cap relief-valve: 100 psi (254 feet)
- 2360 air pressure regulator: 100 psi (254 feet)
- 2350 adapter, tank-to-air pressure regulator

These parts together are listed as Part No. 2349.

The tank air pressure regulator mounts on the gasoline tank in place of the standard hand pump. Compressed air is delivered to it from your air compressor, or from your Air Carry Tank. The regulator is adjustable from 0 psi to 100 psi for pressuring the gasoline to any level and maintaining constant pressure. It is recommended:

1. to deliver fuel to a torch over 25 feet above the tank.
2. for underwater cutting.
3. when returning to the tank is inconvenient.

The regulator is not screwed directly into the tank, but into an adaptor containing a fast-flow check valve. The check valve stops fuel flow in case the regulator accidentally breaks off. The check valve also activates if the regulator is turned too quickly when lowering tank pressure. If this happens, reset the check valve by increasing tank pressure. That forces the check valve down into open position. Now the pressure can again be reduced, slowly.

Compressed Air Carry Tank: We have selected a 5-gallon Air Carry Tank to work with our Automatic Tank Air Pressure Regulator (see previous page). The Automatic Pressure System allows the gasoline tank to be connected to a source of compressed air, and thus maintain constant pressure without hand pumping. This Air Carry Tank is more portable than an air compressor. Part No. 2365.

Machine-mounted Torches: All our machine torches have short handles (1 inch, compared to 4 inches for hand held torches). They all have 180 degree heads and over-center cutting levers. Except for the rail-cutting torch, all others have brass barrels of the standard 1-3/8 inch diameter.

All our machine torches are of the 2-hose type, with the single oxygen hose delivering both pre-heat and cutting oxygen. Therefore, our torches are semi-automatic and not designed for remote control.

Part No. 1003 - 18 inch torch for mounting on pantograph or track machine. Barrel 8-1/2 inches long with 32-pitch rack. The head of this torch will not fit through the circular type torch holder. It requires a full-opening torch holder. We recommend ordering pinion torch holder (Part No. 4557) which we install at time of assembly. Our torch holder ends in a 3/8 inch threaded shaft, which will fit or is easily adapted to most machines.

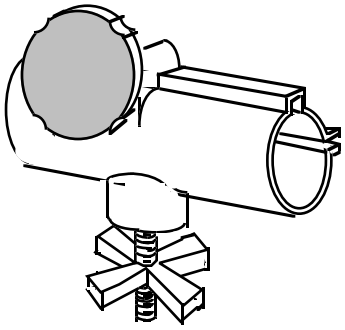

Part No. 4557: 32-pitch pinion torch holder for machine torch

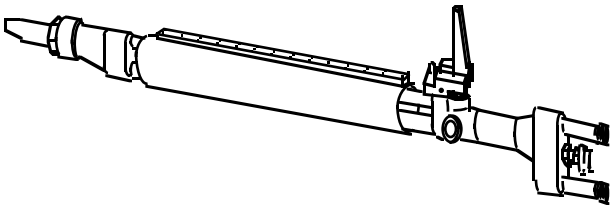

Part No. 1003: 18-inch machine torch

1016 - 13 inch torch for mounting on pipe-cutter. Smooth barrel 3-1/2 inches long. Torch head will not fit through circular type torch holder, but requires a “swing-away” type torch holder.

1017 - 18 inch torch for mounting on pipe-cutter. Smooth barrel 8-1/2 inches long. Same as 13 inch torch, but is longer to provide greater adjustment distance.

1018 - 18 inch torch for mounting on rail cutting-guide. No barrel. Instead, dove-tail torch holder (Part No. 4501) is required for mounting on rail cutting-guide (Part No. 4500).

Rail Cutting Guide: When used together with our 18 inch 180 degree rail-cutting torch, the guide permits a fast, clean slice of any size rail to be made in less than one minute. The finished surface is of a quality high enough to permit thermit welding without any dressing of the surfaces. The machine weighs 24 pounds and is easily moved from cut to cut. It locks itself to the rail without requiring any clamping. The torch movement is controlled by two levers. One lever moves the torch forwards and backwards; the other lever swivels the torch up and down.

Rail-Cutting Guide

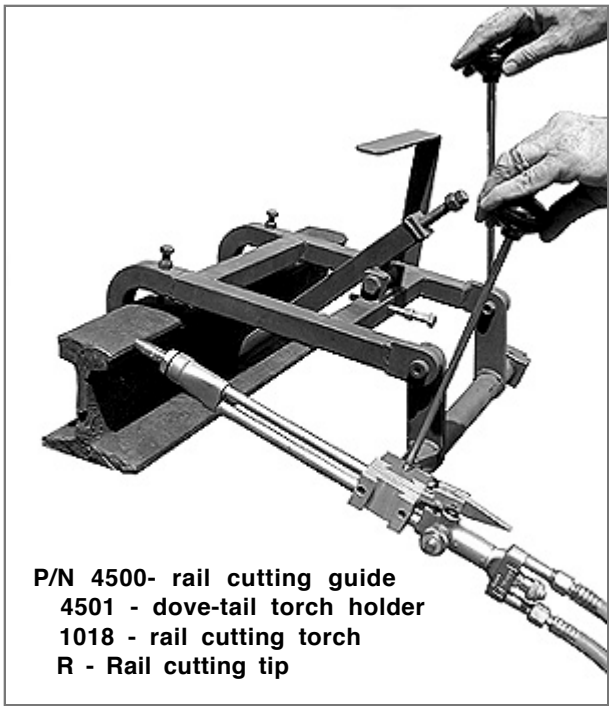

P/N 4500- rail cutting guide
4501 - dove-tail torch holder
1018 - rail cutting torch
R - Rail cutting tip

To mount the torch on to the pantograph, part no. 4500, requires dove-tailed torch holder, part number 4501. The correct torch is part no. 1018, with length 18 inches, 180 degree head, short handle, and over-center cutting lever. A special rail-cutting tip (part number “R”) delivers a thin, high-speed jet of cutting oxygen which helps create the clean, smooth cut necessary for further thermit welding. The tip requires oxygen pressure of 80 psi.

Oxygen Backflash Arrestor: A backflash up the oxygen line is possible, just as for any other cutting torch. An oxygen backflash occurs when fuel enters the oxygen line while the torch is idle and the operator forgets to purge the oxygen line before igniting the torch. Purging the oxygen line is a required procedure for all torches, by all manufacturers. Nevertheless, accidents can occur and a backflash arrestor is a useful device that will increase your safety margin. Part No. 3102.

OXYGEN REGULATORS. The oxygen regulator is an important part of the torch system. If the regulator is not of proper design or is malfunctioning, steel cutting will not be satisfactory.

For cutting steel, the proper regulator must be:

1. single stage (we do not offer a 2-stage regulator)
2. high flow (nominal 8000 SCFH rating)

Although a 2-stage regulator will work, a 1-stage is better. A 2-stage has an automatic drop to 700 psi in its first stage. This is accomplished by an internal orifice which also obstructs the oxygen flow. The 2-stage provides a very close control over final pressure. It limits the pressure drop (draw-down) while the torch is being used.

The 2-stage is used where fine control is needed, but cutting steel is not one of those applications. The draw-down of a 1-stage is well within the performance requirements of cutting steel. Using a 2-stage when the oxygen bottle falls below 700 psi will result in draw-down much more severe than if it were a 1-stage. Contrary to much belief, a 2-stage regulator is not safer than a 1-stage. A high-flow regulator is absolutely necessary. It must pass the amount of oxygen required by the tip size and the pressure setting. Our largest tip no. 8 draws 1400 SCFH when cutting 12 inches of steel. If the cutting tip uses more oxygen than the regulator can deliver, there will be a severe draw-down and the flame will become bright yellow because over-enriched with fuel.
Regulators must be checked periodically. The majoring of regulators in operation are malfunctioning to some degree. The operator must be aware of the effects of oxygen pressure on his work and be alert to changes that would indicate a new regulator is needed.

Regulator Adaptors for British Oxygen Bottles. Our standard American regulator will not fit into a British bottle. To make it fit, we offer a 2-piece adaptor consisting of: 1) stem that screws into the regulator at one end and presses into the British bottle at the nipple end. 2) nut that holds the nipple end of the stem tight against the British bottle.

Our regulators may be ordered with British stem or American stem (see price list). If no preference is indicated, we will furnish the regulator with the American stem. The adaptor may be ordered separately. Relevant part numbers are:

- 3130 - single stage oxygen regulator, for American bottle
- 3140 - 2-piece stem adaptor (stem + nut), for American regulator to British bottle

If you wish to order oxygen regulators with British bottle adaptors already installed, see Price List, part 3135. We do not offer Metric adaptors. There is no single Metric standard and each country has its own dimensions for Metric oxygen bottles.

Whip Lines: A whip line is a short (5 foot) length of more flexible hose attached to the torch, between the torch and the standard hose. The whip line permits the operator to control his torch more easily than being directly connected to the heavier standard hose. We offer whip lines for both oxygen and gasoline. The oxygen whip line is 1/4-inch inner diameter (instead of our standard 5/16). The gasoline whip line is single-braid hose (instead of our standard 2-braid hose.) Oxygen whip line: Part No. 3118. Gasoline whip line: Part No. 3012.

"Y" Valves: An oxygen "Y" valve installed at the oxygen regulator will permit two torches to operate from one oxygen bottle. A gasoline "Y" will permit two torches to operate from one gasoline tank. The "Y" connectors have a valve on each branch so that one torch can be disconnected without affecting the operation of the other. See Part Nos. 3103 and 3007.

Hose Fittings: All our hose fittings are to American CGA standard, size "B". We carry a full line of fittings for all hose diameters. The fittings include nuts, barbed nipples, machine crimp ferrules, hose screw clamps, barbed hose connectors, splicers and hose couplers. When ordering nipples, ferrules, and clamps, please give inside and outside diameter of hose (if different from our standard).

UNDERWATER CUTTING TORCH

We have separate descriptive literature for our underwater torch. Please call for our Underwater Price List, and for our manual, ***Underwater Cutting With the PETROGEN Oxy-Gasoline Cutting Torch.***

PARTS LIST

0	cutting tip
1	cutting tip
2	cutting tip
3	cutting tip
4	cutting tip
5	cutting tip
6	cutting tip
7	cutting tip
8	cutting tip
81	small scrapping tip
83	large scrapping tip
L	large heating tip
R	rail cutting tip

1000 SERIES: TORCHES

100	Standard Petrogen Package
100/50	Standard Petrogen Package with 50 foot gasoline hose & 50 foot oxygen hose
100/100	Standard Petrogen Package with 100 foot gasoline hose & 100 foot oxygen hose
1002	torch, 15 inch, 90 degree head (3 pounds)
1003	machine torch, 18 inch-180 degree head with 32-pitch barrel and over-center cutting lever (requires pinion torch holder 4557)
1004	torch, 20 inch, 90 degree head (3.5 pounds)
1005	torch, 20 inch, 75 degree head (3.5 pounds)
1006	torch, 20 inch,180 degree head (3.5 pounds)
1007	torch, 27 inch, 90 degree head (4 pounds)
1008	torch, 27 inch, 75 degree head (4 pounds)
1009	torch, 27 inch,180 degree head (4 pounds)
1010	torch, 36 inch, 90 degree head (5 pounds)
1011	torch, 36 inch, 75 degree head (5 pounds)
1012	torch, 36 inch,180 degree head (5 pounds)
1013	torch, 48 inch, 90 degree head (6 pounds)
1014	torch, 48 inch, 75 degree head (6 pounds)
1015	torch, 48 inch,180 degree head (6 pounds)
1016	pipe-cutter torch, 13 inch-180 degree head, with smooth 3-inch barrel and over-center cutting lever
1017	pipe-cutter torch, 18 inch-180 degree head, with smooth 8-inch barrel and over-center cutting lever (same as 1003 but without rack)
1018	rail-cutting torch, 18 inch-180 degree head, over-center cutting lever
1019	*custom torches:* A) 60 inches (6 pounds) B) 72 inches (6 pounds) C) 84 inches (7 pounds)
1300	preheat oxygen valve
1301	handwheel, torch valves
1350	high pressure oxygen valve
1356	0-ring, external, high pressure oxygen valve
1357	0-ring, internal, high pressure oxygen valve

1401	lever assembly with nut and screw
1403	lever nut
1404	lever screw
1450	over-center lever for high pressure oxygen valve
1650	hose connector, oxygen
1651	hose connector, gasoline
1707	gasoline valve - 20 inch
1708	gasoline valve - 27 inch
1709	gasoline valve - 36 inch
1792	female valve seat, gasoline valve
1800	mixer with wick & 0-rings (1802+1803+1804)
1802	metal wick
1803	0-ring, mixer, large end
1804	0-ring, mixer, small end
1810	tip nut

2000 SERIES: STANDARD TANK

2000	tank, complete with hand pump, 35 psi relief
2001	tank, complete with air regulator, 100 psi relief
2020	bare tank shell
2040	adaptor, tank to filler cap
2150	filler cap assembly, 35 psi relief
2151	filler cap assembly, 100 psi relief
2155	handwheel, filler cap
2156	handwheel screw, filler cap
2157	large gasket, filler cap
2176	pressure relief seal, filler cap
2200	check-valve for tank pressure gage
2211	tank pressure gage
2300	pump assembly, complete (2301+2320)
2301	pump cylinder assembly
2306	seal, pump cylinder check valve
2307	seal retainer, pump check valve
2308	spring, pump check valve
2309	nut, pump check valve
2310	lock washer, pump check valve
2320	pump shaft assembly
2321	pump shaft
2322	pump shaft handle
2324	pump shaft spring
2325	pump shaft, screw cap
2326	pump shaft, nut/washers
2327	leather pump cup
2328	pump shaft, flat washer
2329	pump shaft nut
2349	tank automatic pressure kit (2151+2350+2360)
2350	adapter required for tank air pressure regulator
2360	tank air pressure regulator (requires 2350)
2362	inlet, air pressure regulator
2363	outlet, air pressure regulator
2365	compressed air carry tank (requires part 2349 on fuel tank)
2400	tank gasoline shutoff valve
2401	handwheel, tank gasoline shutoff valve
2501	decal: "cutting chart"

3000 SERIES: HOSES

3002	gasoline hose - ferrule
3003	gasoline hose - barbed nipple
3004	gasoline hose - nut
3005	gasoline hose - barbed hose splicer
3006	gasoline hose - coupler
3007	gasoline "Y", with valves
3008	gasoline hose, by the foot
3009	gasoline hose assembly - 20 feet
3009E	Economy gasoline hose assembly (with splice) - 20 feet *
3010	gasoline hose assembly - 50 feet
3011	gasoline hose assembly - 100 feet
3012	gasoline hose assembly; 5 foot whip line
3013	gasoline hose - quick disconnect
3100	oxygen hose - nut
3101	oxygen hose - coupler
3102	oxygen backflash arrestor
3103	oxygen "Y" with valves
3104	oxygen hose - ferrule
3105	oxygen hose - barbed nipple
3106	oxygen hose - barbed hose splicer
3110	oxygen hose, by the foot
3111	oxygen hose assembly - 25 feet
3111E	Economy oxygen hose assembly (with splice) - 25 feet *
3112	oxygen hose assembly - 50 feet
3116	oxygen hose assembly - 100 feet
3118	oxygen hose assembly - 5 foot whip line (1/4 inch)
3119	oxygen hose - quick disconnect
3130	1-stage oxygen regulator, 250 psi gauge, to American bottle
3135	1-stage oxygen regulator, 250 psi gauge, to British bottle
3140	adapter stem, from U.S. oxy regulator to British bottle
3200	hose screw clamp - specify hose outer diameter

4000 SERIES: TOOLS

4000	Standard parts & tool kit (4002+4003)
4002	Standard parts kit (see Ref. Manual p.4 for contents)
4003	Standard tool kit (see Ref. Manual p.4 for contents)
4010	plastic tool box (1 x 3 x 7 inches)
4011	packing nut wrench
4012	tip reamer
4013	tip brush assembly
4016	jackscrew
4017	installation tool for high pressure oxygen valve stem 0-ring
4018	tip drill set
4019	hex allen wrench for hose connectors
4020	3-way sparker
4021	extra flint
4500	rail cutting-guide
4501	dove-tail torch holder for rail cutting-guide
4557	32-pitch pinion torch holder (for torch 1003)
4560	Petrogen hand cart

* Economy hose is new hose spliced from short ends.

5000 SERIES: UNDERWATER

5000	STANDARD UNDERWATER CUTTING TORCH OUTFIT
5010	CONVERSION PARTS PACKAGE - converts Part 100 to Underwater Application
5001	underwater torch, 14 inch 90 degree; over-center lever
5020	underwater shroud assy (5021+5022+5023)
5021	tip nut for shroud
5022	locknut
5023	heat sink
5100	complete UW parts and tool kit
5101	plastic tool box (large)
5102	wrench for shroud tip nut
5103	underwater electric sparker

6000 SERIES: FIRE RESCUE

6000	**PCS - PORTABLE CUTTING SYSTEM**
6000E	**PCS Economy Package**
6001	plastic carry case with harness, handle and scabbard
6005	gasoline hose assembly; 20 foot whip line
6009	oxygen hose assembly - 20 foot whip line
6015	2-quart gasoline tank
6020	welding glasses
6021	welding gloves
6022	adjustable wrench
6023	pigtail CGA 540
6024	medical CGA 870 adapter to pigtail
6040	CGA 540 Jumbo D 23 cu.ft. aluminum oxygen bottle
6041	medium duty CGA 540 oxygen regulator
6050	**HEAVY RESCUE OUTFIT**
6051	**OPTIONAL HEAVY RESCUE AUXILIARY PACKAGE**
-	recondition torch - labor only
-	recondition tank - labor only

PETROGEN

Standard Package Layout

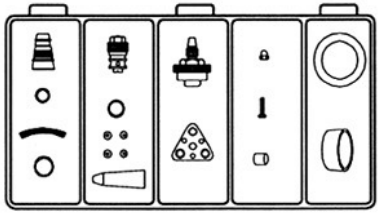

Standard Parts Kit

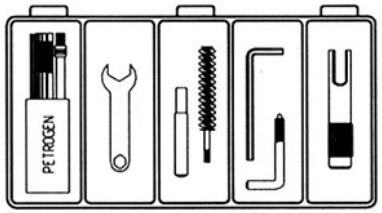

Standard Tool Kit

3-Way Sparker

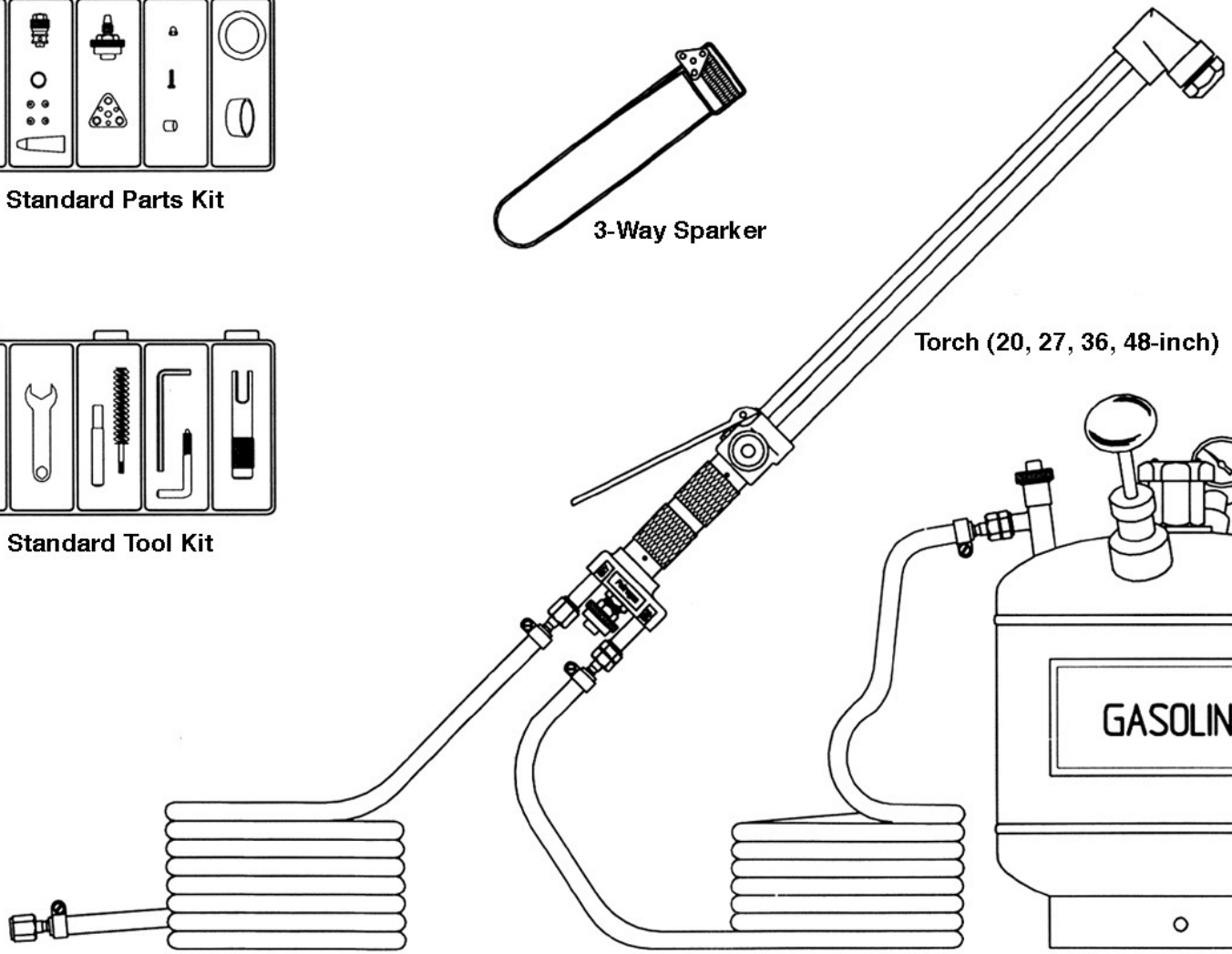

Torch (20, 27, 36, 48-inch)

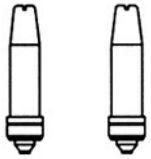

Cutting Tips #1 & 3

Oxygen Hose 25 Foot Assy.

Gasoline Hose 20 Foot Assy.

Gasoline Tank

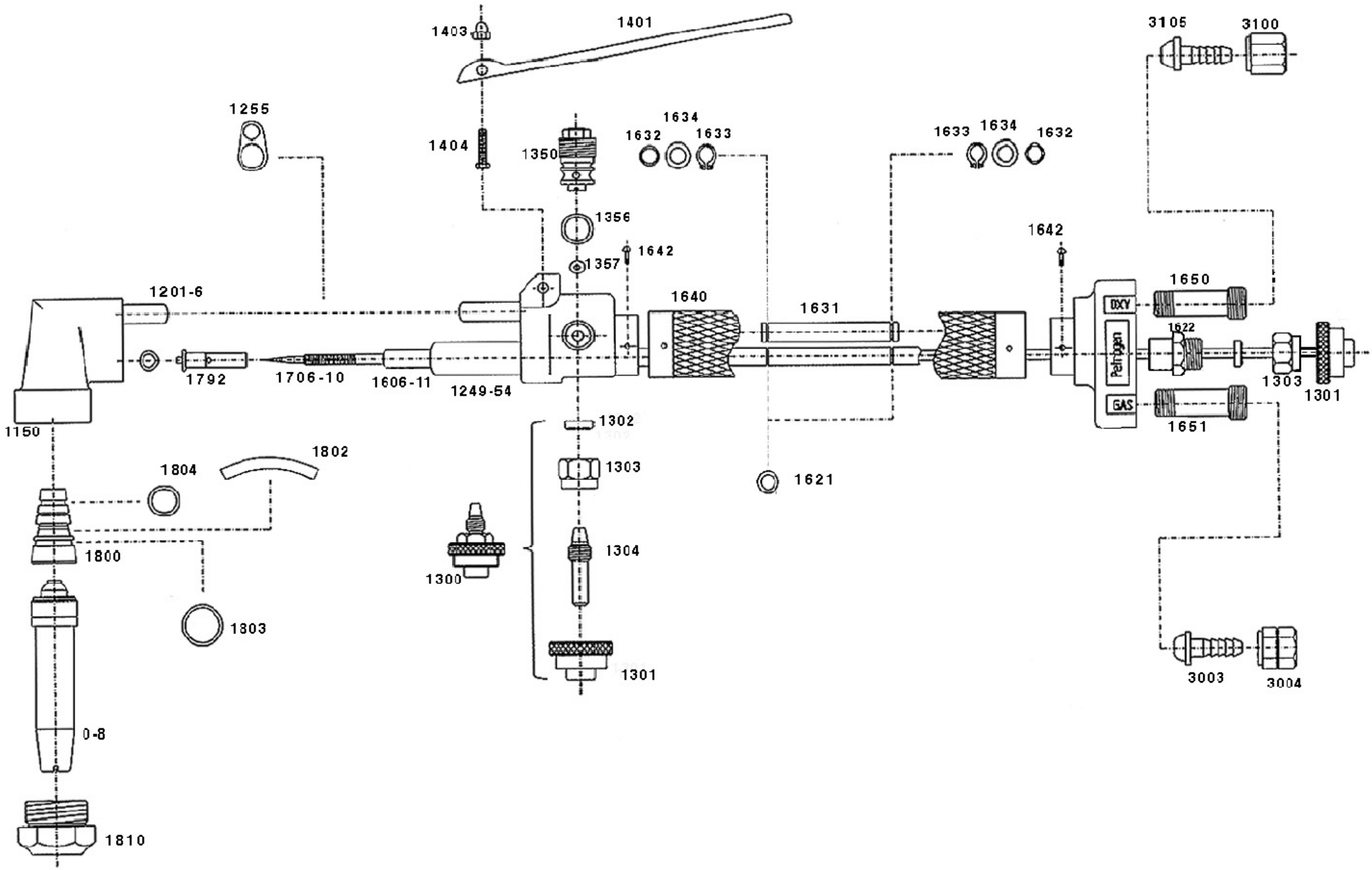
1403
1401
3105
3100
1255
1404
1350
1634
1632
1633
1633
1634
1632
1356
1642
1357
1642
1650
1201-6
1640
1631
OXY
1622
Pathogen
1303
1301
1792
1706-10
1606-11
1249-54
GAS
1651
1150
1302
1802
1804
1303
1621
1800
1304
1300
1803
1301
3003
3004
0-8
1810

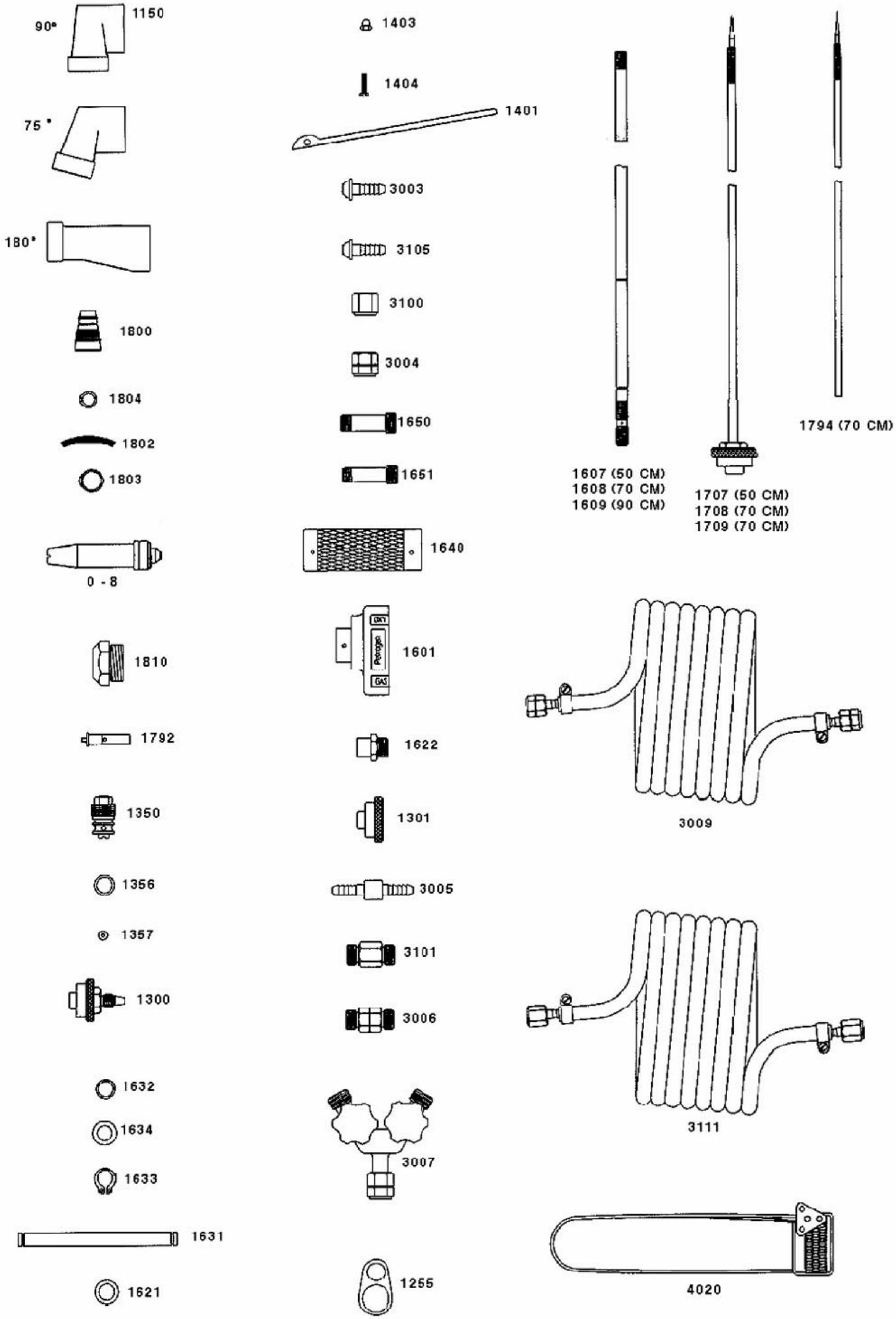
90°
1150
75 °
180°
1800
1804
1802
1803
0 - 8
1810
1792
1350
1356
1357
1300
1632
1634
1633
1631
1621
1403
1404
1401
3003
3105
3100
3004
1650
1651
1640
1601
1622
1301
3005
3101
3006
3007
1255
1607 (50 CM)
1608 (70 CM)
1609 (90 CM)
1707 (50 CM)
1708 (70 CM)
1709 (70 CM)
1794 (70 CM)
3009
3111
4020

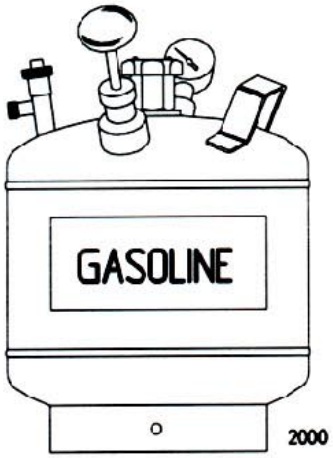
GASOLINE
2000

2211
2200

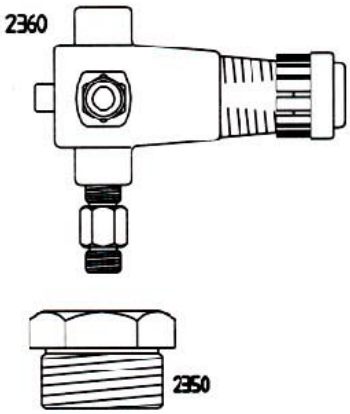
2360
2350

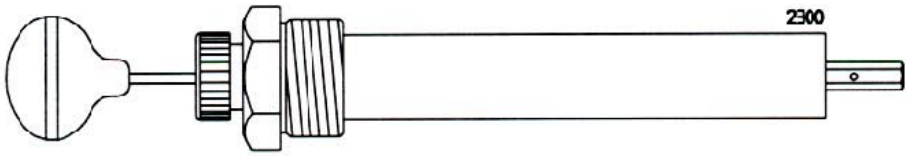
2300

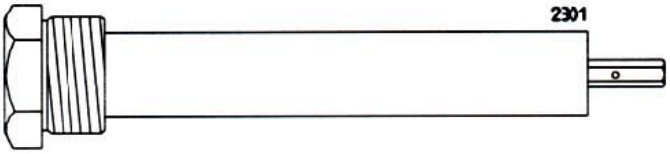
2301

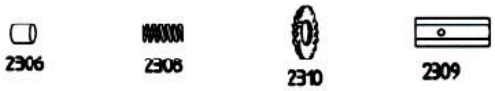
2306
2308
2310
2309

2040

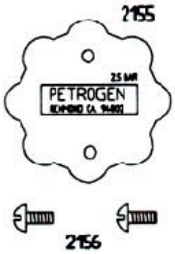
2155
PETROGEN
2156

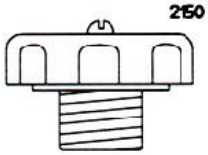
2150

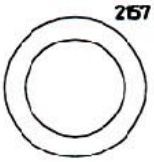
2157

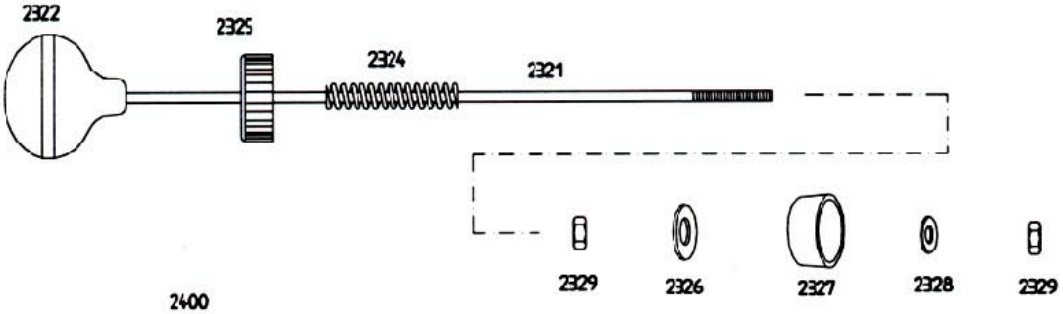
2322
2325
2324
2321
2329
2326
2327
2328
2329

2400

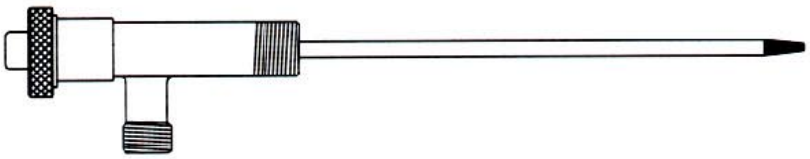

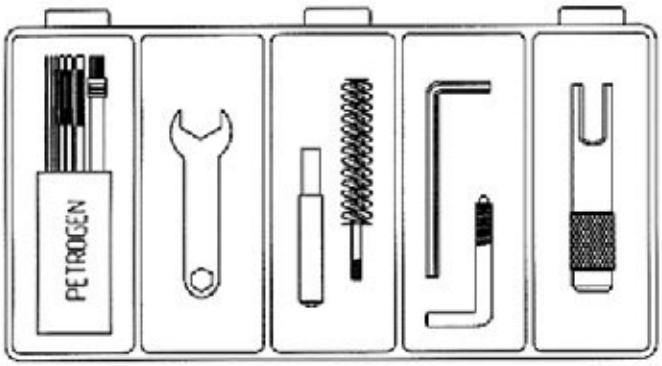

4003

4018 4011 4013 4019 4016 4012

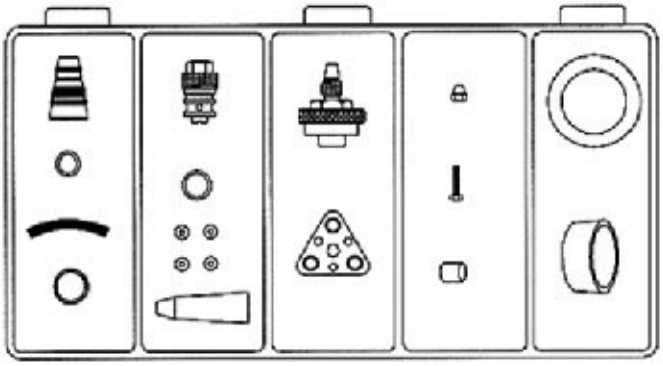

4002

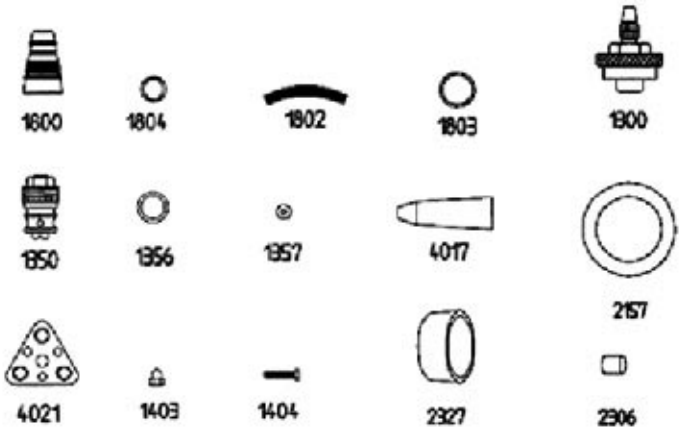

1600 1804 1802 1803 1300

1350 1356 1357 4017 2157

4021 1403 1404 2327 2306

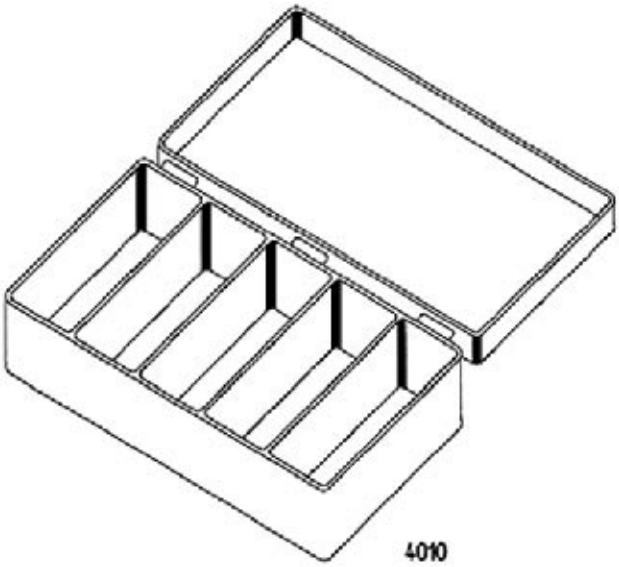

4010

PARTS DESCRIPTIONS

Cutting Lever. The lever operates the high pressure oxygen valve directly underneath. After the pre-heat flame has started to melt the steel, pressing the cutting lever permits the oxygen (at regulator pressure) to enter the work and cut the steel.

Cutting Tips. The tip is a 2-piece assembly, with an inner brass core and an outer copper shell. The liquid fuel is vaporized, directed down to the base of the core, and then re-directed out of the tip through the flutes of the core. As the gasoline changes
from liquid to vapor, its volume increases almost 200 times.

This rapid expansion provides a great deal of force to the pre-heat flame. Because the gasoline vaporizes inside the tip, and because evaporation is a cooling process (similar to how a refrigerator works), the PETROGEN tip runs remarkably cool. This permits the tip to operate longer in hot environments and is one of the factors that give the PETROGEN tip an extraordinary long life. We offer a series of 9 cutting tips, 0 through 8.

high heat scrapping tips. Extremely dirty or rusted surfaces require a large pre-heat flame to obtain quick ignition and to maintain it. We have created two tips that combine the high pre-heat flame of our no. 8 cutting tip with the cutting oxygen jets of our no. 1 and no. 3 cutting tips. The combination of no. 8 heating with no. 1 cutting we call no. 8-1. The combination of no. 8 heating with no. 3 cutting we call no. 8-3. Refer to the cutting chart (page 13) for the capabilities of tips no. 1 & 3. For rough scrapping, all listed thicknesses of steel can be considerably exceeded by increasing the oxygen pressures.

heating tip . The heating tip is similar to the cutting tip. The major difference is that the high pressure oxygen path is sealed at the based of the tip. The heating tip has no oxygen jet. Instead of emitting oxygen, the center bore emits more pre-heat flame and provides a uniform heat source which is very effective for heating applications. The highly oxidizing flame can thoroughly clean steel surfaces at the rate of 1.5 square feet per minute.

Filler Cap Assembly. The filler cap contains 2 unique safety features. A visible slot at the end of the threads permits tank pressure to be released before the cap is completely unscrewed. This supplies protection for the final 2 turns. Always REMOVE CAP SLOWLY. The interior of the cap assembly is really a pressure relief safety valve. It is spring loaded and screw set at the factory to release at a pressure of 35 psi. The cap cover and gasket are separately serviced items, but a new relief valve will come as a complete filler cap assembly.

Fuel. The PETROGEN system works safely and efficiently on any grade of gasoline. Ethanol within federally mandated limits is acceptable. Clean burning requires the higher volatility of gasoline. The additive Stabil can keep gasoline fresher for a longer period of time. Be sure the gasoline is not contaminated by water, dirt, diesel fuel or oil. Leaded gasoline is perfectly safe to use in the PETROGEN torch. The highly oxidizing gasoline flame oxidizes the lead and it precipitates as a solid, not as a breathable vapor.

Gasoline Hose. PETROGEN uses 1/4 inch 2-braid hose designed specifically to include gasoline service. Our standard length is 20 feet but hose can be ordered in any length, either as an assembly with fittings or as bare hose. Acetylene hose will not work with the PETROGEN torch; the inside of the hose will deteriorate and damage the torch.

NOTE: A new gasoline hose may have some residue left from the manufacturing process. Fuel coming from this hose will be yellow and very oily. Run the torch for about 5-10 minutes until fuel is clear and flame is normal. Longer hose lengths will take longer to clear.

Gasoline Tank. The tank is manufactured to ASME standards for unfired pressure vessels. Fill the tank to about 2 inches (5 cm.) from the top. If the tank is completely full, there can be no room for the air which is needed to pressurize the tank. The tank entrance is designed to accept all ordinary delivery nozzles found at gasoline supply stations.

Hand Pressure Pump. The PETROGEN fuel delivery system is easily pressurized using the hand pump. Since the system operates on very low pressure, between 10 psi and 20 psi, light pumping is all that is needed to charge the system. Pump to 20 psi; pump again when the pressure falls to 10 psi. During a full day of operation pumping will be required only about 2 or 3 times.

Unscrewing the pump screw cap allows the pump shaft to be removed. At the bottom of the shaft is a leather pump cut which compresses the air as the shaft is forced down by hand. At the bottom of the cylinder is a flat spring-loaded seal (under the long hexagonal hut).

The seal is a one-way valve, permitting air to travel only from the pump into the tank. It stops air and gasoline from backing up into the pump cylinder. However, dirt in the fuel or dirt coming down the pump shaft may interfere with the seal and necessitate its replacement. A leaking seal becomes obvious when the pump handle insists on rising after the tank is pressurized, or if gasoline is seen leaking past the pump shaft.

> PRESSURIZE TANK TO 10 PSI (70 kpa) MINIMUM. KEEP GAGE NEEDLE OUT OF THE RED ZONE. THIS IS NECESSARY TO ENSURE PROPER OPERATION OF THE FAST-FLOW CHECK VALVE INSIDE THE GASOLINE SHUTOFF VALVE ASSEMBLY.

High Pressure Oxygen Valve. This is located directly under, and operated by, the cutting lever. It is designed to fully open immediately for quick starts.

Hose Connectors. These are threaded brass tubes which connect the hoses to the base of the torch. The oxygen connector has a right hand thread which receives a standard size “B: oxygen nut. The gasoline connector has a left hand thread which receives a standard size “B” acetylene nut.

Mixer. The mixer is a removable, cone-shaped, brass, machined piece which fits into the torch head. It is removed with the jackscrew. The mixer receives both the pre-heat oxygen and the gasoline and combines them into a fuel mixture which is then fed into the tip assembly. Around the mixer are 4 grooves.

The grooves in the mixer are used for:

1) small O-ring
2) slot which receives the pre-heat oxygen
3) wick which receives the gasoline and carries it uniformly around the mixer to give an even flame
4) large O-ring

Oxygen Hose. We use only the very best oxygen hose: type “S”, grade “T”. It is designed for welding service and is resistant to abrasion, fire, and oil. Our standard hose is 1-braid, 5/16” diameter. Our standard length is 25 feet but it can be ordered in any length, either as an assembly with fittings or as bare hose.

Packing for Torch Gasoline & Pre-heat Oxygen Valves. Torches have a machined Teflon packing that requires no maintenance.

Pressure Gage. The pressure gage fits into an adapter. The adapter contains a check valve that helps make the PETROGEN System accident-proof by preventing fuel from escaping if the gage is every broken off.

Railroad Rail Cutting Tip. A special tip number “R” is available for cutting rail. The nozzle is of a design that creates a high velocity oxygen stream in a narrower diameter. This permits deep, fast cuts through the usually difficult rail material. This tip is intended for use with the PETROGEN rail cutting-guide, and operates with 80 psi oxygen. For hand-held rail cutting we recommend the normal no. 3 cutting tip.

Tank Gasoline Shutoff Valve. The gasoline hose attaches here with a left hand thread. When opening the gasoline valve, open it SLOWLY. If the valve is opened quickly there will be a distinct metallic click as the fast-flow ball check snaps into place and shuts off the fuel.

If this happens, close the fuel valve, lightly tap the side of the pipe stem, and try again. This re-sets the ball check. The location of the valve ensures continued operation of the check valve even if the external upper part of the shutoff valve is broken off by rock fall or other accident.

The function of the check valve is to shut off fuel flow if the gasoline hose is accidentally cut. This safety feature is unique to the PETROGEN torch. IN ORDER TO FUNCTION PROPERLY THE VALVE MUST ALWAYS BE OPENED FULLY. If you suspect the check valve to be inoperative, do not use the tank until you have replaced the entire assembly. At the end of the gasoline tube, inside the tank, is a gasoline filter which gives protection against dirty fuel.

Tip Nut. After the tip assembly is seated on the mixer in the torch head, the system is tightened and locked in place by the tip nut, which should be tightened firmly but not hard. Proper torque is about 15 foot-pounds.

Torch. We manufacture both hand-held torches and machine-mounted torches. Hand torches are available in 3 head angles: 90, 75, and 180 degrees. They are available in many lengths: 14, 20, 27, 36, 48 inches. Longer torches can be made to your order.

Machine torches are available in several different types. All machine torches have short handles of 1 inch (hand-held torches have handles of 4 inches). Barrels are all standard 1-3/8 inch diameter. Heads are all 180 degrees.

a) For mounting on pantographs or track machines: 18 inches long, 8-1/2 inch barrel with rack, with integral pinion torch holder.

b) For mounting on pipe cutter machines: (pipe machine must have swing-away torch holder - our torch head will not fit through circular torch holder):

13 inch torch, smooth barrel 3-1/2 inches long.
18 inch torch with smooth barrel 8-1/2 inches long.

c) For mounting on rail cutting guide: 18 inches long with no barrel.

Torch Gasoline Valve. This valve has a long stem which runs the entire length of the torch, controlling the gasoline flow at the torch head. The tip of the valve ends in a very sharp needle point. The screw threads which create the movement of the valve are incorporated into the needle valve itself. They mate with internal threads located inside the replaceable female valve seat installed inside the torch head.

Appendix A

FUEL COMPARISONS

All pure hydrocarbon fuels have the same BTU content: 21,000 BTU's per pound. These BTU's prepare steel for oxidation, therefore the same weight of fuel will cut the same amount of steel, regardless of which fuel. But there are differences in how the steel is cut. Some fuels have difficulty in penetrating rusty or dirty surfaces. Some fuels penetrate steel deeper than others. Some fuels cut faster than others. Some fuels are cheaper than others.

ACETYLENE. This has long been the standard gas for welding and cutting. It is the only gas that achieves welding temperatures in a neutral mode (neither oxidizing nor carburizing). Acetylene is the most expensive fuel per BTU. It cuts reasonably fast. It is generally available in industrialized areas but scarce elsewhere. Oxygen consumption is reasonable. Acetylene is also the most dangerous of all the gases.

STABILIZED ACETYLENE. This is a manufactured gas and is available under many different trade names such as MAPP. It is liquid under pressure and its chief advantage is that more BTU's can be stored in bottles of similar size. It is much safer than acetylene although not completely safe from backflashing. Its performance is similar to acetylene: welding is a little poorer but cutting is a little better. Distribution of this type of gas is severely limited by the relatively small number of factories that engage in its manufacture. Cost per BTU is about the same as acetylene.

PROPANE (OR BUTANE). This is much cheaper than acetylene and is generally available. It is also somewhat safer than acetylene but not as safe as gasoline. It does not weld and its cutting ability is not quite as good as acetylene. It is liquid only under pressure. Based on U.S. prices, propane is 80% cheaper than acetylene, but the savings are greatly offset by a 30% increase in oxygen consumption.

GASOLINE. This is by far the best cutting fuel. It is the safest, cheapest, best-cutting, and most available of all. Based on U.S. prices, gasoline is 90% cheaper than acetylene and 50% cheaper than propane. Liquid gasoline is inert. It is completely impossible to backflash the PETROGEN torch up the gasoline line. Gasoline must have oxygen to burn - acetylene is dangerous even without oxygen. For the gasoline torch, oxygen consumption is the same as for acetylene and 25% to 30% less than propane, which means big oxygen savings when switching from propane to gasoline. Gasoline cuts up to 4 times faster than acetylene and all cuts are always completely clean. As for availability, no fuel in the world is as universally available as gasoline.

> **ETHANOL** is sometimes added to gasoline as a government sponsored conservation act. The PETROGEN torch will not work well with ethanol. Ethanol is an alcohol and it does not evaporate easily. The PETROGEN system can tolerate ethanol in the percentage specified by government guidelines. However, a greater concentration of ethanol will result in a preheat flame that sputters yellow and is difficult to adjust. You can solve this problem: 1) Use aviation gasoline. Alcohol is NOT allowed into aviation gasoline. 2) Pour water into the gasoline and shake it for about one or two minutes. The ethanol will be absorbed by the water and the gasoline can be poured off the top of the mixture. Use about 1 part water to 9 parts gasoline.

Appendix B

ENERGY CONSERVATION ANALYSIS

ENERGY COMPARISON. Acetylene is wasteful of energy. It is a manufactured gas. For every BTU of acetylene yield, 4 BTU's of energy are directly consumed in the manufacturing process. In addition to the direct energy loss, there is the energy needed to construct, operate and maintain lime plants, coal mines, coke ovens, carbide plants, and acetylene generators. Additionally, considerable energy is expended to manufacture, fill, transport and maintain acetylene cylinders. All this is wasted energy, paid for by the end user. It is why acetylene energy costs at least 10 times more than gasoline energy.

Gasoline, as an alternative fuel for cutting steel, eliminates this waste entirely. The same oil refinery which produces gasoline as the end product fuel for the PETROGEN oxy-gasoline cutting system, also produces the fuel which serves as the entrance product for acetylene manufacture. The same 21,000 BTU's which could be used directly in the PETROGEN system trickle down to 5,300 BTU's if diverted to acetylene manufacture.

MANUFACTURING COMPARISON. No special effort is required to produce the gasoline used in the oxy-gasoline steel cutting system. The amount of gasoline needed to fuel all steel cutting activity is infinitesimal compared to world-wide gasoline production. As for acetylene, its elimination from steel cutting would have a very visible effect on the chain of coal, coke, lime, and carbide manufacture.

DISTRIBUTION COMPARISON. The distribution network for steel-cutting gasoline already exists as developed for the world-wide petroleum delivery network which makes gasoline available in virtually every corner of the world. A PETROGEN user need go only as far as the place where he filled up his car or truck in order to obtain steel-cutting fuel.

As for acetylene, carbide must be carefully packed, handled, and shipped to acetylene generating plants. At the plants, the carbide must be handled and converted. Losses during distribution include damaged carbide drums, plus a continual 15% loss of acetylene still remaining but unobtainable inside each acetylene cylinder after use. Acetylene cylinders are a major, costly item to manufacture, handle, inspect, and fill. Compared to gasoline filling stations, acetylene plants are relatively scarce throughout the world, sometimes hundreds of miles from the user.

INDEX

acetylene 55, 56
adjusting pre-heat flame 18
air gaps 15
alloy steels 16

backflash
- arrestor (oxygen) 8, 39
- fuel line 2, 14
- oxygen line 2

British oxygen regulator adaptors 40

carbon build-up inside tip 26
cart 37
cold weather 17
compressed air carry tank 38
concrete-backed steel 16
cooling the tip 25, 26
coupling distance 15
cutting lever 51
cutting tips 5, 13, 36, 51
cutting speed 15, 19
cutting tip selection chart 5, 13
cutting tip & oxygen pressure
- chart 13

elevation 19, 37
energy comparison 56
ethanol 8, 55

factory repairs 27
fast-flow check valve 3
filler cap assembly 51
flame adjustment 9
flame control problems 35
flame patterns 10
fuel comparisons 55
fuel costs 21

galvanized steel 16
gasoline
- BTU's 21, 55, 56
- consumption 23
- flame temperature 20
- source 2, 8, 51
- tank pressure 8, 11
- tank shut-off valve 53

gasoline hose 52
- new (air bubbles) 9
- residue in new hose 9

gasoline tank 52

hand cart 37
hand pressure pump (tank) 52
head angles, torch 4, 36
heating tip 5, 22, 23, 51
Heavy Rescue Unit 6
hex wrench 24
high pressure oxygen valve 26, 52
hole punching 15
hose connectors 52
hose fittings 41

igniting torch 18
internal damage of torch 27

jackscrew 24

labor costs 21
layers of steel 15
leaking tip 25
lighting the torch 2, 8, 12
liquid oxygen 17
loose tip nut 25

machine mounted torches 38
maintenance 22, 24 - 27
mixer 24, 52, 53

operating costs 21
optional equipment 36 - 41
o-ring replacement 26
oxygen
- backflash arrestor 2, 6, 8, 39
- consumption 22
- costs 21
- hose 53
- pressure 13, 19
- purity 17

oxygen regulators 36, 40
- British adaptors 40

packing - valves 53
packing nut wrench 24

parts kit 5
parts descriptions 51 - 54
parts drawings 46 - 50
parts list 42 - 45
PCS 7
performance 15
popping tip 25
Portable Cutting System 7
pre-heat flame adjustment 9, 10, 18
pre-heat oxygen valve 9
pressure
  gage 53
  in gasoline tank 2, 3, 8, 19
  setting 19
  oxygen 13, 19
propane 55
purging oxygen line 2, 9, 11, 12

quick reference guide 11
quick disconnect couplings 37

rail cutting guide 39
rail cutting tip (R) 53
repairs 24 - 27

safety 2, 3, 14
scrapping tips 5, 51
sheet piping 16
shut-off valve, tank 53
shutting down the torch 2, 10, 11
sparks 3,14
speed of cut 15, 19
stainless-backed steel 16
standard package contents 4
storage 3, 10
striking spark 9
surface contamination 16

tank 52
tank automatic pressure kit 37
tank hand pressure pump 52
tank shut-off valve 14, 53
tank pressure 2, 3, 8
testing fast-flow check valve 3
tip nut 53
tip nut, loose 25
tips
  brush 24, 25
  carbon built-up 25
  cooling 25, 26
  drill set 24
(tips cont.)
  leaking 25
  long life 23
  popping 25
  reamer 24, 25
  selection 5, 13
  warming 9, 18
tool kit 5, 24
torch gasoline valve 27, 54
torch head angles 4, 36
torch sizes 36, 54
trouble-shooting 28 - 35

underwater cutting 17, 41

warming tip 9, 18
warranty 3
weather 17
welding 17
whip lines 41

“Y” valves 41