Stormwater Pollution Control Plan

Expansion and Renovation of the Fairfield Regional Fire Training Center

State Project No. BI-FP-14DB

Fairfield, CT

November 2015

56 Quarry Road
Trumbull, Connecticut 06611

Project No. 20130828.A10

Table of Contents

Stormwater Pollution Control Plan
Fairfield Regional Fire Training Center

1 Introduction 3

2 Site Description 3
- 2.1 Scope of Construction Activities 4
- 2.2 Area of Disturbance 5
- 2.3 Stormwater Discharge Information 5
- 2.4 Receiving Waters 6
- 2.5 Wetlands on Site 6

3 Construction Sequencing 6

4 Control Measures 7
- 4.1 Erosion and Sediment Controls 7
  - 4.1.1 Stabilization Practices and Protection 8
  - 4.1.2 Structural Measures 8
  - 4.1.3 Maintenance 9
- 4.2 Dewatering Wastewaters 10
- 4.3 Post-Construction Stormwater Management 11
  - 4.3.1 Standards 11
  - 4.3.2 Control Measures 11
  - 4.3.3 Redevelopment Project Performance Standards 11
- 4.4 Other Controls 12
  - 4.4.1 Waste Disposal 12
  - 4.4.2 Construction Materials 12
  - 4.4.3 Washout Areas 12
  - 4.4.4 Vehicle Tracking and Dust Control 13
  - 4.4.5 Chemical and Petroleum Products 13
  - 4.4.6 Fertilizers 13
  - 4.4.7 Spill Control Practices 14

5 Runoff Reduction and Low Impact Development (LID) Information 14

6 Inspections 14
- 6.1 Plan Implementation Inspections 14
- 6.2 Routine Inspections 15
- 6.3 Corrective Actions 16

Table of Contents

Stormwater Pollution Control Plan
Fairfield Regional Fire Training Center

7 Monitoring 16
- 7.1 Monitoring Requirements 17
- 7.2 Monitoring Reports 17
- 7.3 Sampling Points 17

8 Contractors 17
- 8.1 General 17
- 8.2 Certification Statement 18

9 Additional Requirements 18
- 9.1 Endangered and Threatened Species 18

10 Termination 18

Figures — End of Report

1 FEMA Map
2 Drainage Basin Map
3 Property/ Topographic Survey
4 NDDB Map
5 NRCS Soil Map

Appendices — End of Report

A CT DEEP General Permit for the Discharge of Stormwater and Dewatering Wastewaters from Construction Activities Registration Form and General Permit
B Identification of Contractor and Certification Statements
C Construction Drawings and Details
D Stormwater Management Report
E Notice of Termination Form
F Sedimentation and Erosion Control Inspection Report Form
G Stormwater Monitoring Report Form (Turbidity Sampling Data) and Sampling Location Map

1 Introduction

This Stormwater Pollution Control Plan is required as part of the registration process under section (the *General Permit for the Discharge of Stormwater and Dewatering Wastewaters from Construction Activities* (General Permit), effective October 1, 2013.

The expansion and renovation of the Fairfield Regional Fire Training Center, herein referred to as the Project, is considered a construction activity in accordance with the Connecticut Department of Energy and Environmental Protection (CT DEEP) General Permit. The purpose of this plan is to specify parameters to follow to minimize pollution caused by use of the site during and after construction is completed. Erosion and sediment control requirements are also shown on the plans. A location map of the site can be found in *Attachment A* of the General Permit Registration Form, under *Appendix A* of this plan.

During construction the contractor(s) shall be responsible for implementing elements of the erosion and sedimentation control measures as defined on the drawings and in this plan. Erosion and sedimentation controls will be implemented and adjusted as needed throughout construction to minimize soil erosion.

Throughout the construction process, the Permittee or Permittee's agent shall periodically inspect erosion control measures. A monitoring program will be put in place to observe potential off-site impacts due to erosion. After construction, the Permittee shall be responsible for maintaining these erosion and sedimentation control measures. The Project will not be considered complete until disturbed areas have been satisfactorily stabilized for at least three months, erosion has been repaired, and temporary erosion control measures have been removed as called for on the plans.

The general contractor(s) and subcontractor(s) will be required to sign the certification statement located in *Appendix B* of this plan.

2 Site Description

The Connecticut Department of Administrative Services (CT-DAS) intends to expand and renovate the Fairfield Regional Fire Training Center located at 205 Richard White Way, Fairfield, CT. The project will demolish the existing building and construct an approximately 17,200 square foot administration building with a vehicle maintenance bay and a rehab shelter. The site enhancements also include the construction of an approximately 6,300 square foot burn building for training, upgrades to the existing training tower, construction of a new 40,000 gallon drafting test pit, and the construction of new training props. Training props to be provided include a car prop, a propane pressure vessel prop, a propane stove prop, a propane split flange prop, a foam training/ extinguisher pad, a vehicle extrication pad, and a CDL/ Driver training course. A space will be reserved on the site to accommodate a future 10,000 square foot storage building. The average grade throughout the site will be raised in order to achieve a finished floor elevation of 14 NAVD88 for the new administration building. This elevation is 1 foot above the FEMA 100 year flood elevation for the site which is elevation 13 NAVD88.

According to information gathered from the web soil survey provided by the Natural Resources Conservation Service (NRCS), the soils within the work area consist of approximately 10% Westbrook mucky peat, 11% Dumps, and 79% Udorthents-Urban land complex. A NRCS soil map is attached as *Figure 5*. This project will directly disturb approximately 840 SF (0.02 acres) of on-site inland wetlands. The wetlands' function is low, primarily serving as a drainage ditch across the existing site. Full project disturbance is approximately 195,649 SF (4.5 acres), which is located entirely within the 100-yr floodplain. There will be no impacts to vernal pools, impaired water bodies, aquifer protection areas, or fisheries habitat. There will be no project activity within the FEMA floodway or a stream channel encroachment line and the project does not involve critical activity as defined in Section 25-68b(4) of the CT general statutes.

Construction Drawings and Details for this Project are located in *Appendix C* of this plan.

2.1 Scope of Construction Activities

The proposed construction activities at the project site include the following:

- Demolition of the existing administration building
- Removal of existing pavement, walkways, utilities, site features, etc. in order to accommodate the new site improvements
- Construction of an approximately 17,200 square foot administration building complete with a vehicle maintenance bay and rehab shelter
- Construction of an approximately 6,300 square foot burn building for training
- Upgrades to the existing training tower
- Construction of a new 40,000 gallon drafting test pit
- Construction/installation of new training props including:
    - Car fire prop
    - Propane pressure vessel prop
    - Propane stove prop
    - Propane split flange prop
    - Foam training/ extinguisher pad
    - Vehicle extrication pad
    - CDL/ Driver training course
- Reservation of an adequate space on site to accommodate a future 10,000 square foot storage building.
- Construction of new driveways, walkways, parking areas, and training areas to allow for proper flow of vehicles and pedestrians throughout the improved site
- Installation of landscaping and fencing adjacent to new site features and the site boundary
- Construction/installation of new utilities including:
    - Primary and secondary electrical service and transformer
    - Potable/domestic and fire protection water service
    - Gas service
    - Sanitary sewer service
- Construction of a new stormwater management system:
    - Installation of new storm structures
    - Installation of new storm pipes

- Installation of a water treatment unit
- Installation of roof drains
- Installation of an underground infiltration system

2.2 Area of Disturbance

The total disturbed area within the project site will be approximately 4.5 acres. This area has been defined on the plans as the limit of work and the contractor(s) shall conduct work within this area only.

2.3 Stormwater Discharge Information

Fuss & O'Neill prepared calculations to evaluate existing hydrologic conditions of the site and predict the impact the proposed development will have on the receiving tidal wetlands. These receiving tidal wetlands are adjacent to the project site and are tributary wetlands of Long Island Sound. The drainage information also presents design calculations for the peak runoff rate, peak volume, and runoff coefficient of stormwater leaving the site after construction. Measures taken to improve the water quality of the runoff from the developed site are presented as well.

The Project was designed to maintain the existing drainage patterns from the developed site. Existing storm structures on the site will be removed and the majority of runoff from the improved site will be captured by a new drainage system. The drainage system will have a headwall outlet that discharges upgradient of tidal wetlands. A riprap settling basin will be provided at the outlet to prevent erosion and a tide gate will be installed to prevent backflow into the system. Runoff from the site driveways, parking areas, lawns, and roofs will be collected and channeled through a subsurface infiltration system. An isolator row has been implemented into the design of the infiltration system in order to provide sediment and debris collection. In the event of a significant storm event that fills the infiltration system to capacity, stormwater will be directed to the outfall after passing through a hydrodynamic separator treatment unit.

The water quality of runoff from the stabilized, developed site will be improved using Best Management Practices that are in compliance with the CTDEEP 2004 Connecticut Stormwater Quality Manual. Runoff from the developed site will be collected in catch basins equipped with deep sumps and retained in a subsurface infiltration system that has been sized to collect and retain on-site the 1" water quality rain event for the project site. Although the impervious area of the improved site will be slightly greater than the existing site, the amount of runoff generated will not exceed the existing condition. This is possible because the infiltration system will reduce both the volume and peak discharge rate of runoff, thereby compensating for the increase in impervious area. Stormwater discharge information including watershed mapping and drainage calculations are located in *Appendix D* of this plan.

The hydrologic runoff curve number (CN) for the existing site is CN93, and for the proposed site is CN95. Despite the introduction of new impervious surfaces, utilizing on-site infiltration units will abate the stormwater and reduce the overall peak runoff rates leaving the site. The estimated Post-construction water quality improvement is achieved by the use of Best Management Practices (BMPs), designed to remove 80% of Total Suspended Solids (TSS) that may be present in runoff from the proposed site improvements. The stormwater management design meets the requirements of the Connecticut Stormwater Quality Manual and Connecticut and federal stormwater regulations.

A portion of the relevant Flood Insurance Rate Fairfield County, CT Map Number 09001C0419G, Panel Number 419 of 626, Revised July 8, 2013, and Map Number 09001C0438G, Panel Number 438 of 626, Revised July 8, 2013 have been included as *Figure 1*.

2.4 Receiving Waters

The site is located within the Connecticut Southwest Coast Major Basin, specifically within the Southwest Shoreline Basin #7000 sub-basin area as indicated within *Figure 2.* The stormwater drainage system drains to wetlands adjacent to the site which are tidally influenced by Long Island Sound.

2.5 Wetlands on Site

The extent of existing wetlands within the property boundary is approximately 840 sf (0.02 acres) of freshwater inland wetlands as delineated on "Limited Topographic & General Location Survey of the Fairfield Fire School", prepared by Benesch, scale 1"=30'. This map has been included as *Figure 3.* Immediately adjacent to the Project site are wetlands tidally influenced by Long Island Sound.

3 Construction Sequencing

The Contractor shall be aware that clearing, grubbing, stripping, and associated earthwork operations all have significant potential to cause erosion and sedimentation until complete stabilization of the site has occurred. Erosion and sediment control measures are to be modified with changing grades to enable protection areas adjacent to the site.

The project is proposed to be constructed in one individual phase. Proposed construction is expected to occur between February of 2016 and October of 2016. Normal working hours for the site will be 7:00 AM to 5:00 PM.

The general sequence of construction shall proceed as follows:

Pre-Construction: Obtain required permits, authorizations, and approvals from State and Local authorities, as well as private entities including the Permittee having jurisdiction over the Project. Make required notifications to regulatory authorities and provide copies of such permits, authorizations, approvals, and notifications to the Engineer.

Construction: (approximately 4.5 acres of disturbance /240 calendar days)
Improvements are proposed to be constructed between February of 2016 and October of 2016, and will include the following:

- Establish construction access and implement erosion and sedimentation control measures.
- Demolish the existing administration building
- Remove existing pavement, walkways, utilities, site features, etc. according to the demolition & site preparation plan

- Construct an approximately 17,200 square foot administration building complete with a vehicle maintenance bay and rehab shelter.
- Construct an approximately 6,300 square foot burn building for training
- Upgrade/renovate the existing training tower
- Construct/install new utilities as shown on design plans including:
    - Primary and secondary electrical service and transformer
    - Potable/domestic and fire protection water service
    - Gas service
    - Sanitary sewer service
- Construct a new stormwater management system:
    - Install new storm structures
    - Install new storm pipes
    - Install stormwater treatment unit
    - Install roof drains and footing drains
    - Install underground infiltration system
- Construct a new 40,000 gallon drafting test pit
- Construct new driveways, walkways, parking areas, and training areas to allow for proper flow of vehicles and pedestrians throughout the improved site as shown on design plans
- Construct/install new training props including:
    - Car fire prop
    - Propane pressure vessel prop
    - Propane stove prop
    - Propane split flange prop
    - Foam training/ extinguisher pad (with underground storage tank for foam collection)
    - Vehicle extrication pad
    - CDL/ Driver training course
- Install landscaping and fencing adjacent to new site features and the site boundary as shown on design plans

4 Control Measures

The following paragraphs address the controls and measures to be implemented on this site both during and after construction to minimize stormwater pollution to the waters of the State of Connecticut. Controls measures during construction activities are shown on the Erosion and Sediment Control Plan within the Construction Drawings and Details included as *Appendix C*. Calculations for stormwater control measures can be found in the Stormwater Management Report included as *Appendix D*.

4.1 Erosion and Sediment Controls

The goal of this plan is to control erosion on the site and prevent the movement of sediment into adjacent wetlands, watercourses or storm sewer systems. Note that erosion and sediment controls shall conform to the requirements of the "Connecticut Guidelines for Soil Erosion and Sediment Control", dated May 2002, which will hereafter be referred to as the "Guidelines", and the 2004 Connecticut Stormwater Quality Manual, which will hereafter be referred to as the "Standards". To meet these goals, stabilization, structural and maintenance practices shall be implemented by the Contractor as outlined below.

4.1.1 Stabilization Practices and Protection

Both temporary and permanent stabilization practices shall be implemented throughout the project to minimize erosion of soil from the disturbed site. Temporary and permanent stabilization measures are proposed to provide protection against erosion both during and after construction. Existing vegetation shall be preserved to the maximum extent practicable.

When construction activities have permanently ceased or when final grades are reached in any portion of the site, stabilization and protection practices shall be implemented within seven days. Areas that will remain disturbed but inactive for at least 30 days shall receive temporary seeding or soil protection within seven days in accordance with the Guidelines. Areas that will remain disturbed beyond he seeding season shall receive long term non-vegetative stabilization and protection measures sufficient to protect the site through the winter. In all cases, stabilization and protection measures shall be implemented as soon as possible in accordance with the Guidelines.

The stabilization practices to be implemented during the construction of the proposed redevelopment are as follows:

Temporary Vegetative Cover: Temporarily seed all erodible areas that will be exposed greater than 1 but less than 12 months within the first 7 days of suspending grading operations. Apply lime at a rate of 90 lbs/1000 sq. ft. Apply 10-10-10 fertilizer at a rate of 7.5 lbs/1000 sq. ft. Apply perennial rye grass at a rate of 2 lbs/1000 sq. ft to a depth of 0.5 inches. Optimum seeding dates are March 15 to July 1 and August 1 to October 15. Mulch for seed applied within the optimum seeding dates shall be applied evenly such that it provides 80%-95% soil coverage. Mulch for seed applied outside of the optimum seeding dates shall be applied evenly such that it provides 95%-100% coverage.

Permanent Vegetative Cover: Once the planting season begins, temporary stabilization measures shall be removed and slopes shall be prepared and seeded. Planting bed preparation and seeding shall be in accordance with the technical specifications for the project. Seeding shall only occur between April 1st and June 1st or August 15th and October 15th.

4.1.2 Structural Measures

Structural practices shall be implemented to control the movement of sediment, minimize any discharge of pollutants from the site, divert flows away from exposed soils, store flows, and limit runoff. The structural practices to be implemented during construction are as follows:

- Geotextile Sediment Filter Fence: To minimize the transport of sediment from the disturbed areas to receiving wetlands, geotextile sediment filter fence has been shown on the plans at select areas around the site to filter runoff from the disturbed areas. Geotextile sediment filter fence details and locations are provided on the drawings. A row of geotextile sediment filter fence shall be placed around stockpiles during stockpiling operations. Geotextile sediment filter fence shall be removed only when the entire site has been permanently stabilized.

- Haybale Barriers: To provide additional erosion control downgradient of steep slopes, haybale barriers will be installed across the direction of anticipated high runoff flows. Haybale barriers shall remain as temporary measures during construction to protect downgradient disturbed surfaces during establishment.

- Sediment Control at Catch Basins: In order to prevent sediment from entering and accumulating in adjacent storm sewers, existing catch basins that are located near the project site will be protected with silt sack inserts and hay bale barriers. Once the new catch basins are installed on site, they will also be protected with silt sack inserts until all construction is complete. These inserts shall be inspected regularly and emptied as necessary. Sediment control measures at catch basins, both existing and new, shall be removed only after the entire site has been permanently stabilized.

- Construction Entrance/ Anti-Tracking Pad: To prevent soil or sediment from being carried off site by construction equipment, a construction entrance will be installed before site preparation and construction begins. All vehicular traffic traveling into and out of the project area must use the designated construction entrance. The width of the anti-tracking pad shall not be less than the width of the ingress or egress. Adjacent roadways shall be swept daily to remove material that may be tracked onto pavement.

- Temporary Sediment Traps: Temporary sediment traps will be placed in areas where significant amounts of runoff are anticipated and there is a higher likelihood of sediment transport. The sediment traps will be comprised of an earthen berm and riprap weir. When the water level reaches the top of the riprap weir, the water will overtop the weir and flow to the discharge point. Riprap will also be placed downgradient of the weir to ensure that the stormwater discharged from the sediment trap will not cause additional erosion or damage.

- Concrete Washout Area: A designated concrete washout area will be provided on site to allow for the cleaning of concrete trucks after pouring. This area will be comprised of hay bales and plastic sheeting and should be installed as shown in the design plans. All concrete trucks servicing the construction area should offload excess concrete and wash out at this location.

4.1.3 Maintenance

The erosion and sediment controls must be maintained in a condition that will protect waters of the State from pollution during site construction. The Contractor shall conduct the following maintenance to promote the proper performance of erosion and sediment control measures.

- Temporary and Permanent Vegetation: At any eroded areas, repair by filling to finished grades, replace vegetative support material and seed, fertilize and lime, as specified for temporary and permanent stabilization. Add additional mulch as required.

- Pavement Sweeping: Sweep surfaces adjacent to the construction entrances, the soil management areas, and designated haul routes daily. Properly dispose of sediment or debris collected during sweeping operations.

- Haybale Barriers: Remove accumulated sediment from the affected area when sediment reaches half the height of a barrier.

- Silt Fence and Hay Bales: Inspect silt fence and haybales immediately after each rainfall and at least daily during prolonged rainfall. Any required repairs should be made immediately. Should the barrier decompose or become ineffective while the barrier is still needed, the barrier shall be replaced promptly. Sediment deposits should be removed when they reach approximately one-half the height of the barrier. Sediment shall be disposed of on-site as non-structural fill. Sediment deposits remaining in place after the silt fence or hay bales is no longer required shall be removed and placed in a stockpile surrounded by silt fence in a location suitable to the Permittee.

- Catch Basin Inserts: Clean out the catch basin inserts when a significant amount of sediment or other debris has accumulated. Inspect the inserts regularly and be sure to empty them out before they become filled to capacity.

- Temporary Sediment Traps: Sediment traps should be cleaned out when they become filled to half of their storage capacity. The discharge point should be inspected regularly to ensure that the measures taken to stabilize the outlet point are sufficient and there is no erosion occurring at the outlet. If it is observed that additional erosion control measures are necessary at the discharge point, they must be installed immediately.

- Concrete Washout Area: Once the concrete washout area is filled to two-thirds of its storage capacity, a new washout area should be constructed in order to accommodate future storage needs. The washout area should be inspected regularly and any damage should be repaired immediately. Hardened concrete should be removed when the facility is filled within 4 inches from the top of the structure.

4.2 Dewatering Wastewaters

When dewatering is necessary, wastewater from dewatering pumps will be infiltrated into the ground where possible. Where this is impracticable, proper methods and devices shall be utilized to the extent permitted by law, such as pumping water into a temporary sedimentation depression, providing surge protection at the inlet and outlet of pumps, floating the intake of the pump, or other methods to minimize and retain the suspended soils. Temporary dewatering pumping basins have been shown on the plans in areas where significant dewatering is anticipated. These wastewaters will not be discharged directly without treatment. If a pumping operation causes turbidity problems beyond the control of these measures, the operation shall cease until feasible means of controlling turbidity (e.g. discharge to the sanitary sewer) are determined and implemented.

4.3 Post-Construction Stormwater Management

4.3.1 Standards

Detailed erosion and sedimentation controls in accordance with the Guidelines have been proposed for this site. This system will protect the downgradient tidal wetlands during and after construction until the site is stabilized. Protection is not required for the on-site inland wetlands since these wetlands will be filled as the result of the proposed work. The water quality of runoff from the stabilized, developed site will be improved using widely accepted BMPs.

4.3.2 Control Measures

At the end of construction, areas disturbed by construction activities shall be stabilized. As a result, the potential for erosion at this site after construction is minimal. Grassed areas will also serve as a filter to remove sediment from runoff if permanently stabilized areas are properly maintained. Perimeter controls (i.e., silt fence) will be actively maintained until final stabilization of those portions of the site up-gradient of the perimeter control. Temporary perimeter controls will be removed after final stabilization.

Water quality measures have been incorporated into the design using BMPs to treat stormwater runoff prior to discharge into the tidal wetlands. The goal of the post-construction stormwater management is to remove floatables and 80% of the total suspended solids from stormwater. This is accomplished, in part, through implementation of a stormwater treatment unit. A hydrodynamic swirl separator in a manhole configuration will treat stormwater prior to discharge. In addition, the majority of the stormwater generated on-site will be retained and treated by a subsurface infiltration system. *Appendix D* contains calculations related to the determination of the Water Quality Volume to be treated and stored by the drainage system.

These BMPs are capable of removing a minimum of 80% of TSS that may be present in runoff from the proposed development of the site. The contractor shall be responsible for cleaning all post-construction stormwater structures and removal of remaining silt fence before filing a termination notice, a copy of which is included as *Appendix E.* After filing the termination, maintenance and cleaning of the unit shall become the responsibility of the Permittee.

The design will meet the requirements of the Connecticut Stormwater Quality Manual, the Standards and Guidelines for Soil Erosion and Sediment Control, and federal stormwater regulations.

4.3.3 Redevelopment Project Performance Standards

The effective existing impervious cover of the entire 4.4 acre drainage area is approximately 62%. Under normal circumstances, only one half of the water quality volume would have to be treated and stored because the existing impervious site coverage exceeds 40%. However, since the proposed drainage system discharges to tidal wetlands, the subsurface infiltration system has been sized to retain on-site the full water quality volume from the proposed development. The stormwater treatment unit has also been

sized to effectively treat the full water quality volume. Water quality volume calculations for this project can be found in the Stormwater Management Report, included as *Appendix D.*

Calculations indicate that approximately 7,540 cf of water quality volume needs to be retained on-site. A total volume of approximately 7,520 cf of available stormwater storage is provided through the use of 96 StormTech SC-740 infiltration chambers and the associated stone bedding material that surrounds the units. However, the available storage volume exceeds the required storage volume when an assumed infiltration rate of 1 inch/hour is factored into the calculations. The stormwater treatment system has been designed, and shall be installed and maintained in accordance with the Stormwater Quality Manual. A small portion of the site to the south of the infiltration system will bypass the infiltration system and be sent directly to the stormwater treatment unit. This is because it is not feasible to convey this stormwater to the infiltration system due to elevation constraints.

4.4 Other Controls

Good housekeeping will be maintained to minimize impacts of protected areas by pollutants, soil, and fugitive sediment.

4.4.1 Waste Disposal

The following BMPs shall be implemented to minimize the discharge of litter, debris, building materials, hardened concrete waste, or similar materials to waters of the State.

- Construction waste will be removed from the site and disposed of legally.
- Waste will be removed from the site as soon as practical.
- Containers will be appropriate for the material stored.
- Where necessary, containers will be sealed/covered to prevent waste from escaping the container.
- Containers will only be located where approved by the engineer or regulatory agency.
- Waste storage areas shall be located, designed, and operated to prevent polluted runoff from leaving the waste storage area.
- Fences or covers shall be provided to prevent waste from blowing out of the waste storage area.

4.4.2 Construction Materials

Construction materials needed for this project will be properly stored in a neat and orderly manner until used. Construction materials shall be stored outside of any buffers and at least 50 feet from any stream, wetland or other sensitive resource.

4.4.3 Washout Areas

Washout of applicators, containers, vehicles, and equipment for concrete, paint, and other materials shall be conducted in a designed washout area. There shall be no surface discharge of washout wastewaters from this area. To eliminate overflows during rainfall or after snowmelt all washwater shall be directed into a pit. This area shall be outside of any buffers and at least 50 feet from any stream, wetland, or other sensitive resource. The area shall be completely self-contained and clearly marked.

In addition, dumping of liquid wastes in storm sewers is prohibited. All wastes including hardened concrete waste from washouts shall be disposed of legally at an off-site location. At least once per week, all containers or pits used for washout should be inspected for structural integrity, adequate holding capacity, and to check for leaks or overflows. If any deficiencies are discovered, corrective action shall be taken immediately. Washout areas shall be emptied when levels reach ½ the height of the container or pit.

4.4.4 Vehicle Tracking and Dust Control

As shown on the plans, a construction entrance shall be installed and maintained to prevent vehicles from tracking sediments onto City roads. The Contractor shall be responsible for performing dust suppression techniques during construction, including but not limited to:

- Spraying water or calcium chloride as necessary to control dust from construction activities. The volume of water sprayed for controlling dust shall be minimized so as to prevent runoff of water. No discharge of dust control water shall contain or cause a visible oil sheen, floating solids, visible discoloration, or foaming. Calcium chloride may also be used to control dust.

- Sweeping surfaces adjacent to the construction entrances and the soil management areas daily. The designated haul routes will be swept as required.

If at any time fugitive dust is observed to be generated from the construction site, the Contractor shall be responsible for employing additional dust suppression techniques to remedy the situation.

4.4.5 Chemical and Petroleum Products

All chemical and petroleum product containers stored on the site (excluding those contained within vehicles and equipment) shall be provided with impermeable containment which will hold at least 110% of the volume of the largest container, or 10% of the total volume of all containers in the area, whichever is larger, without overflow from the containment area. All chemicals and their containers shall be stored under a roofed area. Containers of 100 gallon capacity or more may be stored without a roof only if stored in a double-walled tank.

On-site vehicles shall be monitored for leaks and receive maintenance as needed.

4.4.6 Fertilizers

Fertilizers, if used in conjunction with the seeding operation, will be applied only in the amounts recommended by the manufacturer. Once applied, fertilizer will be worked into the soil to limit exposure to stormwater. Storage will be in a covered area. The contents of any partially used bags of fertilizer will be transferred to a sealable plastic bin to avoid spills.

4.4.7 Spill Control Practices

The following practices shall be implemented during construction activities to mitigate spills of material and prevent their release to the waters of the State.

- Manufacturers' recommended methods for spill cleanup will be clearly posted and site personnel will be made aware of the procedures and the location of the information and cleanup supplies.
- Materials and equipment necessary for spill cleanup will be kept in the material storage area on-site. Equipment and materials will include but not be limited to brooms, dust pans, mops, rags, gloves, goggles, kitty litter, sand, sawdust, and plastic and metal trash containers specifically for this purpose.
- Spills will be cleaned up immediately after discovery.
- Spills of toxic or hazardous material will be reported to the appropriate State and local government agency, regardless of size.

5 Runoff Reduction and Low Impact Development (LID) Information

Runoff reduction practices have been utilized for the Fairfield Regional Fire Training Center redevelopment project. A detailed erosion and sediment control plan has been prepared for the site. During construction, measures will be taken to reduce erosion and manage sedimentation from disturbed surfaces. This includes the use of silt fencing and haybale barriers which will be installed within the project limits at locations that are down-gradient of disturbed areas. Clearing of existing on-site vegetation will be kept to a minimum and no disturbance will occur within the tidal wetlands adjacent to the site. The drainage system outfall will consist of a 24" RCP headwall outlet with a riprap settling basin to prevent erosion. A tide gate will be installed on the outlet to prevent backflow into the system from the adjacent wetlands in the event of a flood. All stormwater flowing over impervious areas of the constructed site will be captured and treated by the proposed drainage system. An underground infiltration system has also been incorporated into the drainage system design in order to account for the increase in impervious area and attenuate the peak flows leaving the site. In addition, systems that promote infiltration are consistent with Low Impact Development (LID) design practices.

6 Inspections

6.1 Plan Implementation Inspections

Within the first 30 days following commencement of the construction activity on the site, the permittee shall contact: (1) the appropriate District; or (2) a qualified soil erosion and sediment control professional or a qualified professional engineer to inspect the site. The site shall be inspected at least once and no more than three times during the first 90 days to confirm compliance with the General

Permit and proper initial implementation of all controls measures designated in the Plan for the site for the initial phase of construction.

6.2 Routine Inspections

The Permittee shall routinely inspect the site for compliance with the general permit and the Plan for the site until a Notice of Termination has been submitted. Inspection procedures for these routine inspections shall be addressed and implemented in the following manner: The Permittee shall maintain a rain gauge on-site to document rainfall amounts. The Permittee shall engage a qualified inspector, as defined by the General Permit, to inspect the site at least once every seven calendar days and within 24 hours of the end of a storm that generates a discharge. For storms that equal or exceed 0.5 inches that end on a weekend, holiday or other time after which normal working hours will not commence within 24 hours, an inspection is required within 24 hours. For storms of less than 0.5 inches, an inspection shall occur immediately upon the start of the subsequent normal working hours. Where sites have been temporarily or finally stabilized, inspection shall be conducted at least once every month for three months to confirm compliance with the general permit.

The items to be inspected shall include, at a minimum, the following:

- Disturbed areas of the construction activity that have not been permanently stabilized
- All erosion and sediment control measures
- All structural control measures
- Stockpile areas
- Washout areas
- Drainage control facilities including diversion and perimeter drainage ditches
- Locations where vehicles enter or exit the site

Disturbed areas and areas used for storage of materials that are exposed to precipitation shall be inspected for evidence of, or the potential for, pollutants entering the drainage system. Erosion and sediment control measures identified in the plan shall be observed to ensure that they are operating correctly. Where discharge locations or points are accessible, they shall be visually inspected to ascertain whether erosion control measures are effective in preventing significant impacts, such as turbidity to receiving waters. Locations where vehicles enter or exit the site shall be inspected for evidence of off-site sediment tracking.

Based on the results of the inspection, the description of potential sources and pollution prevention measures identified in the plan shall be revised as appropriate by the Permittee or his agent as soon as practicable after such inspection.

A report shall be prepared for every inspection and retained as part of the plan. The report shall, at a minimum, summarizing the following;

- The scope of the inspection
- Name(s) and qualifications of personnel making the inspection
- Date(s) of the inspection
- Weather conditions including precipitation information

- Major observations relating to the implementation of the storm water pollution control plan
- Descriptions of the stormwater discharge(s) from the site
- Any water quality monitoring performed during the inspection
- Statement that, in the judgment of the qualified inspector(s), the site is either in compliance or out of compliance with the terms and conditions of the Plan and General Permit.

The report shall be signed by both the qualified inspector and the permittee or his/her authorized representative in accordance with the General Permit. A blank copy of the inspection report is provided in *Appendix F.*

If the site inspection indicates that the site is out of compliance, the inspection report shall include a summary of the remedial actions required to bring the site back into compliance. During the period in which any corrective actions are being developed and have not yet been fully implemented, interim measures shall be implemented to minimize the potential for the discharge of pollutants to the site.

6.3 Corrective Actions

If at any time an inspection determines that the site is out of compliance with the terms and conditions of this Plan and the General Permit, corrective actions shall be taken. Non-engineered corrective actions (as identified in the Guidelines) shall be implemented on site within 24 hours and incorporated into a revised Plan within three calendar days of the date of inspection unless another schedule is specified in the Guidelines. Engineered corrective actions (as identified in the Guidelines) shall be implemented on site within seven days and incorporated into a revised Plan within ten calendar days of the date of inspection unless another schedule is specified in the Guidelines.

7 Monitoring

Stormwater sampling is required for monitoring turbidity. Sampling shall occur on a monthly basis, during storm events that generate a discharge of stormwater from the site while construction activity is ongoing, until final stabilization of the drainage areas associated with each outfall is achieved. Sampling shall continue on a monthly basis until final stabilization of the drainage area associated with each outfall is achieved.

Sampling is only required during normal working hours, as defined by the General Permit. For this site, normal working hours for stormwater monitoring shall be Monday through Friday, 7am to 5pm. If sampling is discontinued due to the end of normal working hours, it shall be resumed the next working day as long as the discharge continues. Sampling may be temporarily suspended if at any time conditions exist that may pose a threat to the safety of the person taking the sample (i.e. high winds, lighting, flooding, intense rainfall). Sampling shall resume once the unsafe conditions are no longer present. If there is no stormwater discharge during a month, sampling is not required.

7.1 Monitoring Requirements

All samples shall be collected from discharges resulting from a storm event that occurs at least 24 hours after any previous storm event that generated a discharge. Sampling of snow or ice melt in the absence of a storm event is not a valid sample.

Samples shall be grab samples taken at least three separate times during a storm event. The samples shall be representative of the flow and characteristics of the discharge. The first sample shall be taken within the first hour of stormwater discharge from the site. In cases where discharges begin outside of normal working hours, the first sample shall be taken at the start of normal working hours.

Sampling is required of all point source discharges of stormwater from disturbed areas. Sampling shall be done in accordance with 40 CFR Part 136/ASTM D1889-00. Sampling locations can be found in *Appendix G* and shall be identified in the field with a flag, stake, or other visible marker.

7.2 Monitoring Reports

The stormwater turbidity value for each sampling point shall be determined by taking the average of the turbidity values of all samples at that sampling point during a given storm. Any samples containing snow or ice melt must be noted. A blank copy of the stormwater monitoring report for submitting turbidity sampling data is provided in *Appendix G.*

Monitoring reports shall be submitted to CTDEEP in accordance with the provisions outlined in the General Permit.

7.3 Sampling Points

A site plan showing the proposed sampling points is provided in *Appendix G.* The site has 2 sampling points which are described below:

- Sampling Point #1 –24" RCP outfall pipe with headwall that discharges upgradient of the tidal wetlands
- Sampling Point #2 – Overland flow that discharges to the Southwest portion of the site

8 Contractors

8.1 General

All contractors and subcontractors who will perform actions on site that may reasonably be expected to cause or have the potential to cause pollution of the waters of the State will be identified in *Appendix B.*

8.2 Certification Statement

All contractors and subcontractors must sign the certification included in *Appendix B*. All certifications will be included in the Stormwater Pollution Control Plan.

9 Additional Requirements

9.1 Endangered and Threatened Species

The Connecticut Department of Administrative Services conducted a review of the map titled "Natural Diversity Data Base (NDDB) Areas in Fairfield, CT" dated December 2014 published by the Connecticut Department of Energy and Environmental Protection (DEEP) (see *Figure 4).* Preliminary review verified that the project is located within an area known to contain State and Federal Listed Species and Significant Natural Communities. Therefore, a NDDB review request form was completed and sent to the CT DEEP. CT DEEP sent a response stating that negative impacts to any species were not anticipated as a result of the proposed activities. A copy of the NDDB review form and the DEEP response can be found in *Attachment C* of the General Permit Registration Form, under *Appendix A* of this plan.

10 Termination

Once the site has been stabilized and all final inspections have occurred, the registrant shall file a termination notice. Prior to filing for termination, all temporary erosion and sediment control measure shall be removed. A blank copy of the termination form is provided in *Appendix E*.

LEGEND

200	PROPOSED CONTOURS
+ 201.0	PROPOSED SPOT ELEVATION
	PROPOSED CLEARING LIMIT (APPROX.)
	PROPERTY LINE
C	PROPOSED CABLE LINE
S	PROPOSED SANITARY SEWER LINE
T	PROPOSED TELEPHONE LINE
W	PROPOSED WATER MAIN
G	PROPOSED GAS MAIN
E	PROPOSED ELECTRICAL SERVICE
	PROPOSED GUARD RAIL
	PROPOSED HYDRANT AND GATE VALVE
	PROPOSED REINFORCED CONC. CUL. END
	PROPOSED YARD DRAIN
	PROPOSED TYPE "C-L" CATCH BASIN
	PROPOSED TYPE "C" CATCH BASIN
	PROPOSED HEAD WALL
	PROPOSED STORM MANHOLE
	PROPOSED STORM DRAIN
	PROPOSED SANITARY MANHOLE
	PROPOSED SIGN
	PROPOSED LIGHT POLE
	PROPOSED UTILITY POLE
	PROPOSED CONCRETE CURB
	PROPOSED RETAINING WALL
	TOWN WETLANDS LINE
	PROPOSED CONCRETE
	PROPOSED CHAIN LINK FENCE
	PROPOSED GRAVEL EDGING
SF	PROPOSED SILT FENCE
HB	PROPOSED HAY BALES
200	EXISTING CONTOURS
	EXISTING TREE LINE
	EXISTING TREE
	EXISTING UTILITY POLE
	LIMIT OF WORK LINE

SURVEY MAP REFERENCE

DIGITIZED IMAGE OF "LIMITED TOPOGRAPHIC & GENERAL LOCATION SURVEY OF THE FAIRFIELD FIRE SCHOOL" PREPARED BY BENESCH, DATED AUGUST 2013, ISSUED AS PROGRESS PRINT ON SEPTEMBER 26, 2013; SCALE:1"=30.

PROPERTY INFORMATION AND BOUNDARY LINES TO BE PROVIDED BY OTHERS.

TOWN RECORDS, SURVEY PLAN, AND DESIGN PLANS REFERENCE THE FOLLOWING ADDRESSES FOR THIS SITE:

205 RICHARD WHITE WAY
183 RICHARD WHITE WAY
228 ONE ROD HIGHWAY

CIVIL GENERAL NOTES

1. SYMBOLS AND LEGENDS OF PROJECT FEATURES ARE GRAPHIC REPRESENTATIONS AND ARE NOT NECESSARILY SHOWN ON THE DRAWINGS TO SCALE OR TO THEIR ACTUAL DIMENSION OR LOCATION. COORDINATE DETAIL SHEET DIMENSIONS, MANUFACTURERS' LITERATURE, SHOP DRAWINGS AND FIELD MEASUREMENTS OF SUPPLIED PRODUCTS FOR LAYOUT OF THE PROJECT FEATURES.
2. DO NOT RELY SOLELY ON ELECTRONIC VERSIONS OF DRAWINGS, SPECIFICATIONS, AND DATA FILES THAT ARE PROVIDED BY THE ENGINEER. FIELD VERIFY LOCATION OF PROJECT FEATURES.
3. PERFORM NECESSARY CONSTRUCTION NOTIFICATIONS, APPLY FOR AND OBTAIN NECESSARY PERMITS, PAY FEES, AND POST BONDS ASSOCIATED WITH THE WORK AS REQUIRED BY THE CONTRACT DOCUMENTS.
4. SEE ARCHITECTURAL DRAWINGS FOR DIMENSIONS OF BUILDINGS AND ADJACENT SITE ELEMENTS INCLUDING SIDEWALKS, RAMPS, BUILDING ENTRANCES, STAIRWAYS, UTILITY PENETRATIONS, CONCRETE DOOR PADS, COMPACTOR PAD, LOADING DOCKS, BOLLARDS, ETC.
5. BASE PLAN: THE PROPERTY LINES ARE TO BE PROVIDED BY OTHERS. THE TOPOGRAPHY AND PHYSICAL FEATURES ARE BASED ON AN A DIGITIZED IMAGE OF AN ACTUAL FIELD SURVEY PERFORMED ON THE GROUND BY BENESCH DURING AUGUST OF 2013.
6. FIRE PROP CONCRETE PADS TO MEET FIRE PROP REQUIREMENTS.
7. NON-PAVED AREAS TO BE LAWN OR LANDSCAPED. REFER TO LANDSCAPING PLAN.
8. PORTABLE GENERATOR TO BE PARKED IN FRONT OF MECHANICAL ROOM DURING REQUIRED EMERGENCIES, PER OWNER'S/ USER'S DIRECTION.

CT HIGH PERFORMANCE CHECKLIST CRITERIA

7 LOW-EMITTING AND FUEL EFFICIENT VEHICLE PARKING SPACES PROVIDED (5% OF TOTAL PARKING REQUIRED; 5% OF 136 SPACES=6.8=7 SPACES)

7 CARPOOL AND VANPOOL PARKING SPACES PROVIDED (5 % OF TOTAL PARKING REQUIRED; 5% OF 136 SPACES=6.8=7 SPACES)

BIKE RACK FOR 6 BIKES PROVIDED (5% OF BUILDING USERS REQUIRED; 120 USERS PER RFP VOL. 1) (5% OF 120=6 BIKES)

REQUIRED PARKING COUNT: 128/130 STALLS

122 STANDARD STALLS (10 STAFF PARKING – 112 TRAINEE PARKING)

5 HANDICAP STALLS (PER ADA REQUIREMENTS) (1 VAN PER ADA REQUIREMENTS)

7 HANDICAP STALLS (PER RFP REQUIREMENTS) (2 VAN PER ADA REQUIREMENTS)

1 DEDICATED AMBULANCE STALL

PROPOSED PARKING COUNT: 136 STALLS

128 STANDARD STALLS (10 STAFF PARKING – 118 TRAINEE PARKING)

7 HANDICAP STALLS (2 VAN PER ADA REQUIREMENTS)

1 DEDICATED AMBULANCE STALL

NOT FOR CONSTRUCTION

FUSS & O'NEILL
56 QUARRY ROAD
TRUMBULL, CONNECTICUT 06611
203.374.3748
www.fando.com

30 15 0 30
GRAPHIC SCALE

drawing title: LAYOUT PLAN

REVISIONS:

mark	date	description

STATE OF CONNECTICUT
DEPARTMENT OF CONSTRUCTION SERVICES

DRAWING PREPARED BY:
CONSIGLI CONSTRUCTION CO,. INC.
72 SUMNER STREET, MILFORD, MA 01757
508-473-2580 P / 508-473-3588 F

project:
FAIRFIELD REGIONAL FIRE TRAINING CENTER
205 Richard White Way
Fairfield, CT

CAD no.
project no. BI-FP-14 DB

date	11/24/2015
scale	1" = 30'
drawn by	VC
approved by	JEL
drawing no.	CS1.10

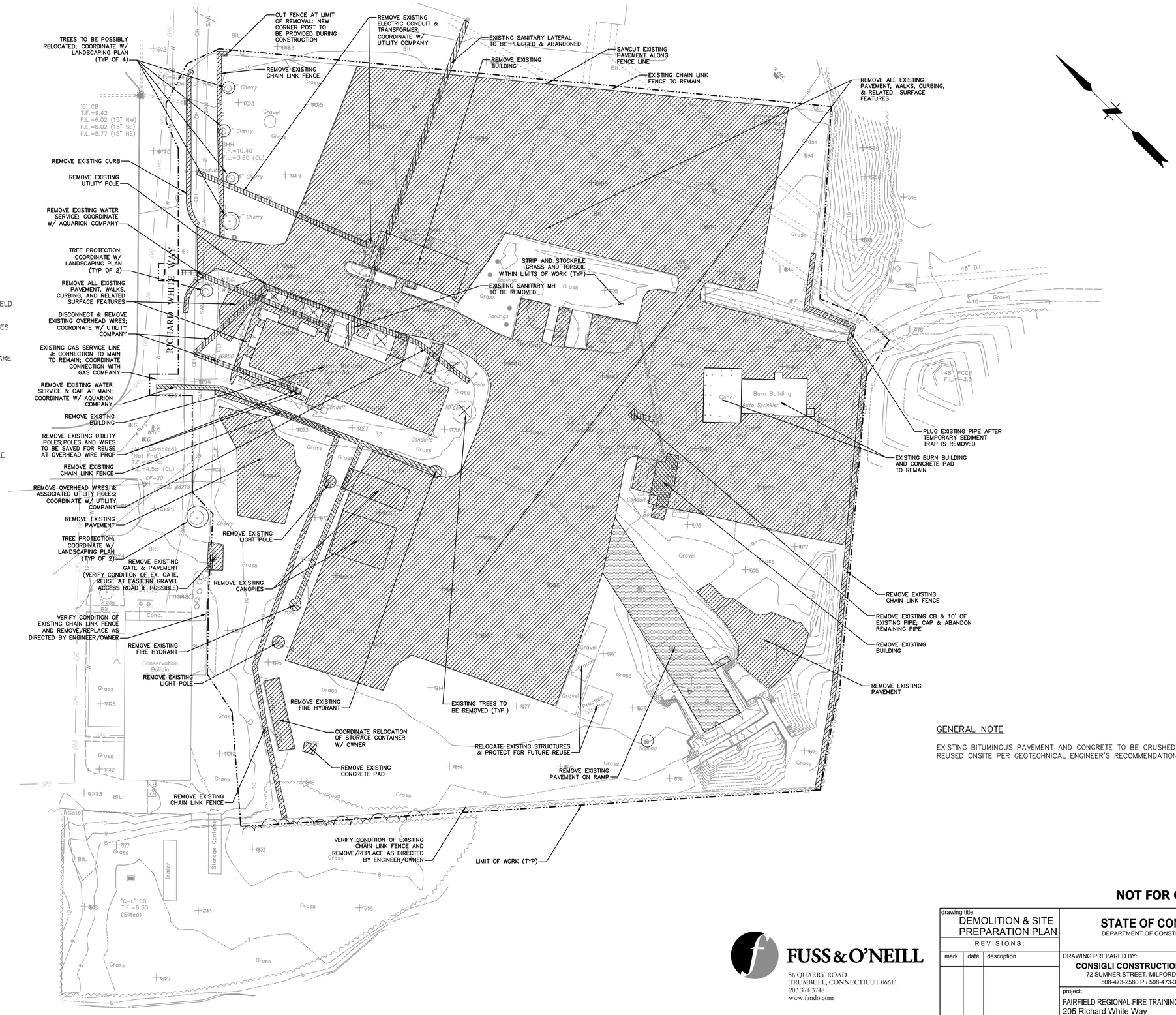

UTILITY NOTE

THE UNDERGROUND UTILITIES DEPICTED HEREON ARE BASED ON FIELD LOCATION OF VISIBLE FEATURES, MAPS AND PLANS OF RECORD, UTILITY MAPPING OR OTHER SOURCES OF INFORMATION. THE ENGINEER MAKES NO GUARANTEE THAT THE UNDERGROUND UTILITIES SHOWN COMPRISE ALL SUCH UTILITIES IN THE AREA, EITHER IN SERVICE OR ABANDONED. THE ENGINEER FURTHER DOES NOT WARRANT THAT THE UNDERGROUND UTILITIES SHOWN ARE IN THE EXACT LOCATION INDICATED ALTHOUGH THE ENGINEER DOES DECLARE THAT THEY ARE DEPICTED AS ACCURATELY AS POSSIBLE FROM INFORMATION AVAILABLE. THE ENGINEER HAS NOT PHYSICALLY LOCATED THE UNDERGROUND UTILITIES.

CALL before you DIG
Call Toll Free In Conn.
1-800-922-4455

CALL-BEFORE-YOU-DIG: THE CONTRACTOR SHALL BE RESPONSIBLE FOR NOTIFYING "CALL BEFORE YOU DIG" AT 1-800-922-4455 TO ARRANGE FOR MARKING OUT EXISTING UNDERGROUND UTILITIES AT LEAST TWO WORKING DAYS PRIOR TO EXCAVATION.

LEGEND

200	PROPOSED CONTOURS
+ 201.0	PROPOSED SPOT ELEVATION
	PROPOSED CLEARING LIMIT (APPROX.)
	PROPERTY LINE
C	PROPOSED CABLE LINE
S	PROPOSED SANITARY SEWER LINE
T	PROPOSED TELEPHONE LINE
W	PROPOSED WATER MAIN
G	PROPOSED GAS MAIN
E	PROPOSED ELECTRICAL SERVICE
	PROPOSED GUARD RAIL
	PROPOSED HYDRANT AND GATE VALVE
	PROPOSED REINFORCED CONC. CUL. END
	PROPOSED YARD DRAIN
	PROPOSED TYPE "C-L" CATCH BASIN
	PROPOSED TYPE "C" CATCH BASIN
	PROPOSED HEAD WALL
D	PROPOSED STORM MANHOLE
	PROPOSED STORM DRAIN
S	PROPOSED SANITARY MANHOLE
	PROPOSED SIGN
	PROPOSED LIGHT POLE
	PROPOSED UTILITY POLE
	PROPOSED CONCRETE CURB
	PROPOSED RETAINING WALL
	TOWN WETLANDS LINE
	PROPOSED CONCRETE
	PROPOSED CHAIN LINK FENCE
	PROPOSED GRAVEL EDGING
SF	PROPOSED SILT FENCE
HB	PROPOSED HAY BALES
200	EXISTING CONTOURS
	EXISTING TREE LINE
	EXISTING TREE
	EXISTING UTILITY POLE
	LIMIT OF WORK LINE

SURVEY MAP REFERENCE

DIGITIZED IMAGE OF "LIMITED TOPOGRAPHIC & GENERAL LOCATION SURVEY OF THE FAIRFIELD FIRE SCHOOL" PREPARED BY BENESCH, DATED AUGUST 2013, ISSUED AS PROGRESS PRINT ON SEPTEMBER 26, 2013; SCALE: 1"=30'

PROPERTY INFORMATION AND BOUNDARY LINES TO BE PROVIDED BY OTHERS.

GENERAL NOTE

EXISTING BITUMINOUS PAVEMENT AND CONCRETE TO BE CRUSHED AND REUSED ONSITE PER GEOTECHNICAL ENGINEER'S RECOMMENDATIONS.

NOT FOR CONSTRUCTION

FUSS & O'NEILL
56 QUARRY ROAD
TRUMBULL, CONNECTICUT 06611
203.374.3748
www.fando.com

30 15 0 30
GRAPHIC SCALE

drawing title: DEMOLITION & SITE PREPARATION PLAN

REVISIONS:

mark	date	description

STATE OF CONNECTICUT
DEPARTMENT OF CONSTRUCTION SERVICES

DRAWING PREPARED BY:
CONSIGLI CONSTRUCTION CO,. INC.
72 SUMNER STREET, MILFORD, MA 01757
508-473-2580 P / 508-473-3588 F

project:
FAIRFIELD REGIONAL FIRE TRAINING CENTER
205 Richard White Way
Fairfield, CT

CAD no.
project no. BI-FP-14 DB

date 11/24/2015
scale 1" = 30'
drawn by VC
approved by JEL
drawing no. CD1.10

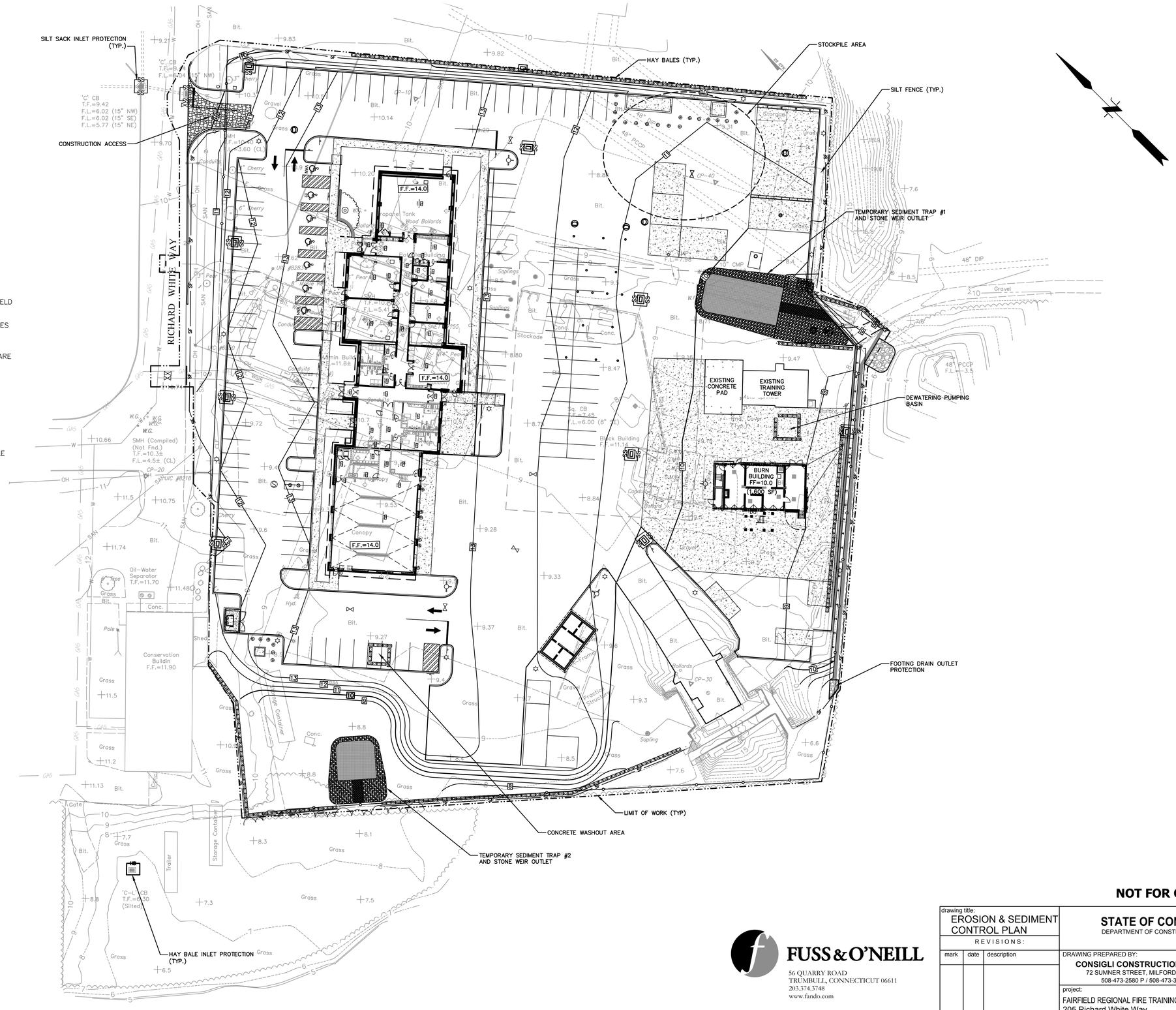

UTILITY NOTE

THE UNDERGROUND UTILITIES DEPICTED HEREON ARE BASED ON FIELD LOCATION OF VISIBLE FEATURES, MAPS AND PLANS OF RECORD, UTILITY MAPPING OR OTHER SOURCES OF INFORMATION. THE ENGINEER MAKES NO GUARANTEE THAT THE UNDERGROUND UTILITIES SHOWN COMPRISE ALL SUCH UTILITIES IN THE AREA, EITHER IN SERVICE OR ABANDONED. THE ENGINEER FURTHER DOES NOT WARRANT THAT THE UNDERGROUND UTILITIES SHOWN ARE IN THE EXACT LOCATION INDICATED ALTHOUGH THE ENGINEER DOES DECLARE THAT THEY ARE DEPICTED AS ACCURATELY AS POSSIBLE FROM INFORMATION AVAILABLE. THE ENGINEER HAS NOT PHYSICALLY LOCATED THE UNDERGROUND UTILITIES.

CALL before you DIG
Call Toll Free In Conn.
1-800-922-4455

CALL-BEFORE-YOU-DIG: THE CONTRACTOR SHALL BE RESPONSIBLE FOR NOTIFYING "CALL BEFORE YOU DIG" AT 1-800-922-4455 TO ARRANGE FOR MARKING OUT EXISTING UNDERGROUND UTILITIES AT LEAST TWO WORKING DAYS PRIOR TO EXCAVATION.

LEGEND

200	PROPOSED CONTOURS
+ 201.0	PROPOSED SPOT ELEVATION
	PROPOSED CLEARING LIMIT (APPROX.)
	PROPERTY LINE
C	PROPOSED CABLE LINE
S	PROPOSED SANITARY SEWER LINE
T	PROPOSED TELEPHONE LINE
W	PROPOSED WATER MAIN
G	PROPOSED GAS MAIN
E	PROPOSED ELECTRICAL SERVICE
	PROPOSED GUARD RAIL
	PROPOSED HYDRANT AND GATE VALVE
	PROPOSED REINFORCED CONC. CUL. END
	PROPOSED YARD DRAIN
	PROPOSED TYPE "C-L" CATCH BASIN
	PROPOSED TYPE "C" CATCH BASIN
	PROPOSED HEAD WALL
D	PROPOSED STORM MANHOLE
	PROPOSED STORM DRAIN
S	PROPOSED SANITARY MANHOLE
	PROPOSED SIGN
	PROPOSED LIGHT POLE
	PROPOSED UTILITY POLE
	PROPOSED CONCRETE CURB
	PROPOSED RETAINING WALL
	TOWN WETLANDS LINE
	PROPOSED CONCRETE
	PROPOSED CHAIN LINK FENCE
	PROPOSED GRAVEL EDGING
SF	PROPOSED SILT FENCE
HB	PROPOSED HAY BALES
200	EXISTING CONTOURS
	EXISTING TREE LINE
	EXISTING TREE
	EXISTING UTILITY POLE
	LIMIT OF WORK LINE

SURVEY MAP REFERENCE

DIGITIZED IMAGE OF "LIMITED TOPOGRAPHIC & GENERAL LOCATION SURVEY OF THE FAIRFIELD FIRE SCHOOL" PREPARED BY BENESCH, DATED AUGUST 2013, ISSUED AS PROGRESS PRINT ON SEPTEMBER 26, 2013; SCALE:1"=30'

PROPERTY INFORMATION AND BOUNDARY LINES TO BE PROVIDED BY OTHERS.

NOT FOR CONSTRUCTION

FUSS & O'NEILL
56 QUARRY ROAD
TRUMBULL, CONNECTICUT 06611
203.374.3748
www.fando.com

30 15 0 30
GRAPHIC SCALE

drawing title:
EROSION & SEDIMENT CONTROL PLAN

REVISIONS:

mark	date	description

STATE OF CONNECTICUT
DEPARTMENT OF CONSTRUCTION SERVICES

DRAWING PREPARED BY:
CONSIGLI CONSTRUCTION CO,. INC.
72 SUMNER STREET, MILFORD, MA 01757
508-473-2580 P / 508-473-3588 F

project:
FAIRFIELD REGIONAL FIRE TRAINING CENTER
205 Richard White Way
Fairfield, CT

CAD no.
project no. BI-FP-14 DB

date	11/24/2015
scale	1" = 30'
drawn by	VC
approved by	JEL
drawing no.	CE1.10

LEGEND

- 200 — PROPOSED CONTOURS
- + 201.0 — PROPOSED SPOT ELEVATION
- PROPOSED CLEARING LIMIT (APPROX.)
- PROPERTY LINE
- C — PROPOSED CABLE LINE
- S — PROPOSED SANITARY SEWER LINE
- T — PROPOSED TELEPHONE LINE
- W — PROPOSED WATER MAIN
- G — PROPOSED GAS MAIN
- E — PROPOSED ELECTRICAL SERVICE
- PROPOSED GUARD RAIL
- PROPOSED HYDRANT AND GATE VALVE
- PROPOSED REINFORCED CONC. CUL. END
- PROPOSED YARD DRAIN
- PROPOSED TYPE "C-L" CATCH BASIN
- PROPOSED TYPE "C" CATCH BASIN
- PROPOSED HEAD WALL
- PROPOSED STORM MANHOLE
- PROPOSED STORM DRAIN
- PROPOSED SANITARY MANHOLE
- PROPOSED SIGN
- PROPOSED LIGHT POLE
- PROPOSED UTILITY POLE
- PROPOSED CONCRETE CURB
- PROPOSED RETAINING WALL
- TOWN WETLANDS LINE
- PROPOSED CONCRETE
- PROPOSED CHAIN LINK FENCE
- SF — PROPOSED GRAVEL EDGING
- SF — PROPOSED SILT FENCE
- HB — PROPOSED HAY BALES
- 200 — EXISTING CONTOURS
- EXISTING TREE LINE
- EXISTING TREE
- EXISTING UTILITY POLE
- LIMIT OF WORK LINE

GENERAL NOTES

1. SITE SHALL BE GRADED SMOOTHLY AND EVENLY IN ACCORDANCE WITH THE PROPOSED TOP OF FRAMES AND SPOT GRADE ELEVATIONS DEPICTED HEREON. CONTRACTOR SHALL BE RESPONSIBLE FOR ENSURING POSITIVE DRAINAGE FLOW TO ALL CATCH BASINS WITHOUT CREATING ANY FLAT SPOTS THAT WILL RESULT IN STANDING WATER.

2. ALL HANDICAP ACCESSIBLE PARKING STALLS SHALL BE GRADED WITH A MAXIMUM PITCH OF 2% IN ANY DIRECTION.

3. PROPOSED ELECTRICAL AND COMMUNICATIONS UTILITIES TO BE UNDERGROUND.

4. SANITARY SEWER PIPE LENGTHS ARE MEASURED FROM STRUCTURE CENTER TO CENTER. STORM PIPE LENGTHS ARE MEASURED FROM STRUCTURE EDGE TO EDGE.

5. COORDINATE THE WORK AND WORK SCHEDULE WITH UTILITY COMPANIES. PROVIDE ADEQUATE NOTICE TO UTILITIES TO PREVENT DELAYS IN CONSTRUCTION.

6. INSTALL PROPOSED PRIVATE UTILITY SERVICES ACCORDING TO THE REQUIREMENTS PROVIDED BY, AND APPROVED BY THE AUTHORITY HAVING JURISDICTION (WATER, SEWER, GAS, TELEPHONE, ELECTRIC, FIRE ALARM, ETC.). COORDINATE FINAL DESIGN LOADS AND LOCATIONS WITH OWNER AND ARCHITECT.

7. PERMEABILITY CHARACTERISTICS OF THE RECEIVING SOILS IN THE VICINITY OF THE PROPOSED INFILTRATION SYSTEM ARE STILL TO BE DETERMINED. THE PROPOSED INFILTRATION SYSTEM AND RELATED FEATURES ARE SUBJECT TO CHANGE BASED UPON PERMEABILITY TESTS THAT WILL BE CONDUCTED IN THE FUTURE.

UTILITY NOTE

THE UNDERGROUND UTILITIES DEPICTED HEREON ARE BASED ON FIELD LOCATION OF VISIBLE FEATURES, MAPS AND PLANS OF RECORD, UTILITY MAPPING OR OTHER SOURCES OF INFORMATION. THE ENGINEER MAKES NO GUARANTEE THAT THE UNDERGROUND UTILITIES SHOWN COMPRISE ALL SUCH UTILITIES IN THE AREA, EITHER IN SERVICE OR ABANDONED. THE ENGINEER FURTHER DOES NOT WARRANT THAT THE UNDERGROUND UTILITIES SHOWN ARE IN THE EXACT LOCATION INDICATED ALTHOUGH THE ENGINEER DOES DECLARE THAT THEY ARE DEPICTED AS ACCURATELY AS POSSIBLE FROM INFORMATION AVAILABLE. THE ENGINEER HAS NOT PHYSICALLY LOCATED THE UNDERGROUND UTILITIES.

CALL before you DIG
Call Toll Free In Conn.
1-800-922-4455

CALL-BEFORE-YOU-DIG: THE CONTRACTOR SHALL BE RESPONSIBLE FOR NOTIFYING "CALL BEFORE YOU DIG" AT 1-800-922-4455 TO ARRANGE FOR MARKING OUT EXISTING UNDERGROUND UTILITIES AT LEAST TWO WORKING DAYS PRIOR TO EXCAVATION.

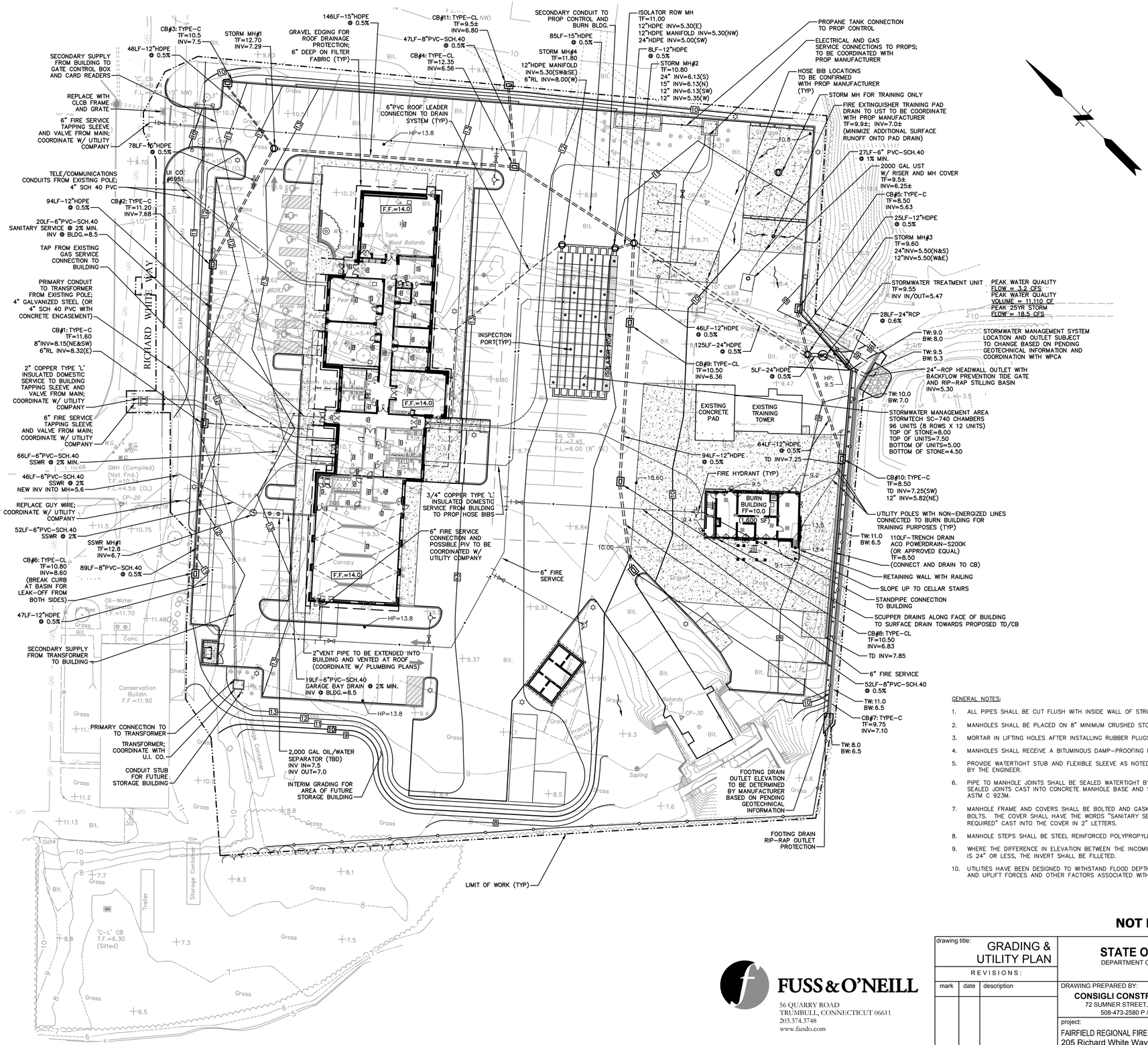

GENERAL NOTES:

1. ALL PIPES SHALL BE CUT FLUSH WITH INSIDE WALL OF STRUCTURE.
2. MANHOLES SHALL BE PLACED ON 8" MINIMUM CRUSHED STONE BASE.
3. MORTAR IN LIFTING HOLES AFTER INSTALLING RUBBER PLUGS.
4. MANHOLES SHALL RECEIVE A BITUMINOUS DAMP-PROOFING PRIOR TO DELIVERY TO THE SITE.
5. PROVIDE WATERTIGHT STUB AND FLEXIBLE SLEEVE AS NOTED ON THE DRAWING OR AS DIRECTED BY THE ENGINEER.
6. PIPE TO MANHOLE JOINTS SHALL BE SEALED WATERTIGHT BY USE OF PRE-MOLDED ELASTOMERIC SEALED JOINTS CAST INTO CONCRETE MANHOLE BASE AND SHALL CONFORM TO ASTM C 443 AND ASTM C 923M.
7. MANHOLE FRAME AND COVERS SHALL BE BOLTED AND GASKETED WITH 1/2" STAINLESS STEEL BOLTS. THE COVER SHALL HAVE THE WORDS "SANITARY SEWER", "CONFINED SPACE PERMIT REQUIRED" CAST INTO THE COVER IN 2" LETTERS.
8. MANHOLE STEPS SHALL BE STEEL REINFORCED POLYPROPYLENE OR ALUMINUM.
9. WHERE THE DIFFERENCE IN ELEVATION BETWEEN THE INCOMING SEWER AND THE MANHOLE INVERT IS 24" OR LESS, THE INVERT SHALL BE FILLETED.
10. UTILITIES HAVE BEEN DESIGNED TO WITHSTAND FLOOD DEPTHS, PRESSURES, VELOCITIES, IMPACT AND UPLIFT FORCES AND OTHER FACTORS ASSOCIATED WITH THE BASE FLOOD.

NOT FOR CONSTRUCTION

FUSS & O'NEILL
56 QUARRY ROAD
TRUMBULL, CONNECTICUT 06611
203.374.3748
www.fando.com

30 15 0 30
GRAPHIC SCALE

drawing title: GRADING & UTILITY PLAN	STATE OF CONNECTICUT DEPARTMENT OF CONSTRUCTION SERVICES	
REVISIONS: mark / date / description	DRAWING PREPARED BY: CONSIGLI CONSTRUCTION CO,. INC. 72 SUMNER STREET, MILFORD, MA 01757 508-473-2580 P / 508-473-3588 F	date 11/24/2015
		scale 1" = 30'
	project: FAIRFIELD REGIONAL FIRE TRAINING CENTER 205 Richard White Way Fairfield, CT	drawn by VC
		approved by JEL
	CAD no. / project no. BI-FP-14 DB	drawing no. CG1.10

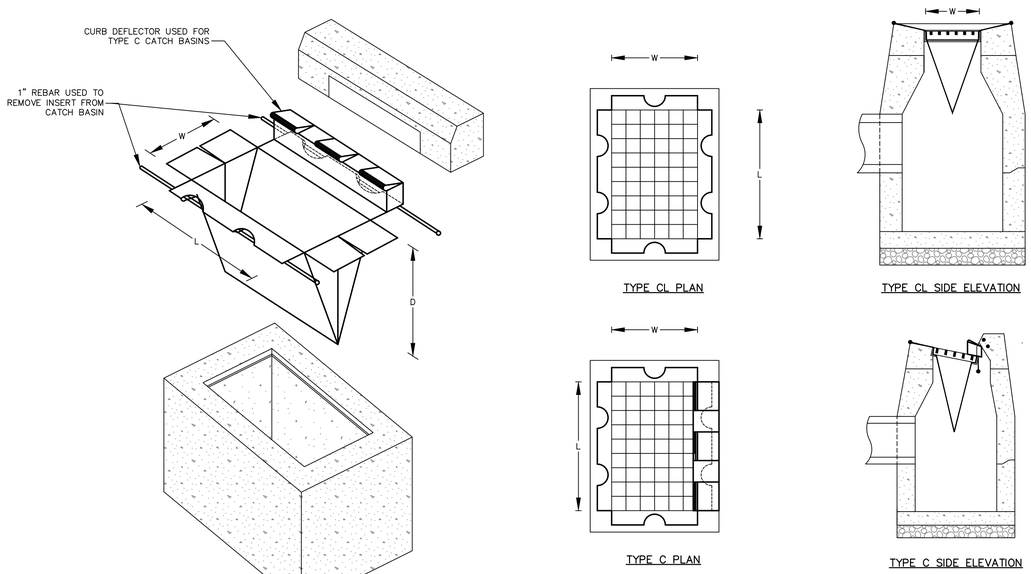

CATCH BASIN INSERT (SILT SACK)

NOT TO SCALE

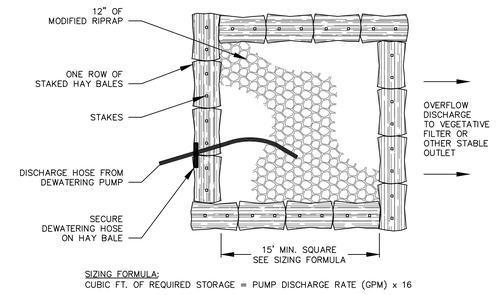

DEWATERING PUMPING SETTLING BASIN TYPE I

NOT TO SCALE

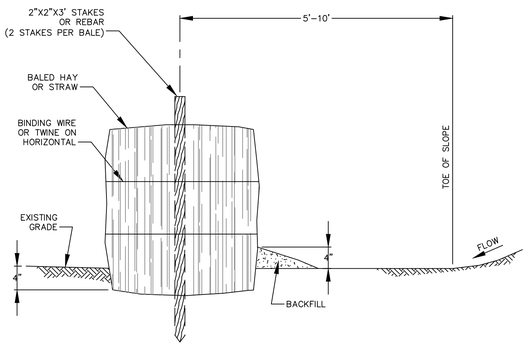

TOE OF SLOPE HAY BALE BARRIER

NOT TO SCALE

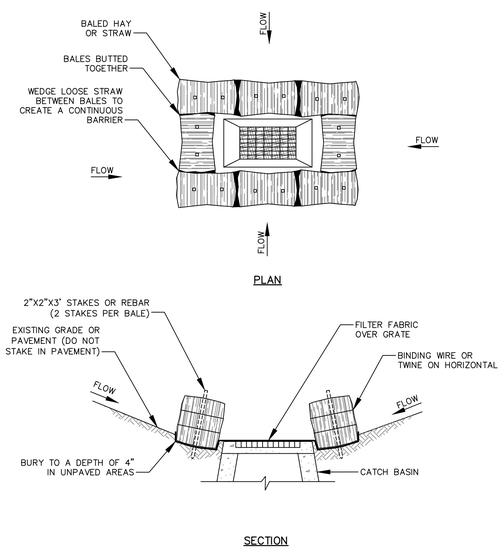

LOW POINT HAY BALE BARRIER

NOT TO SCALE

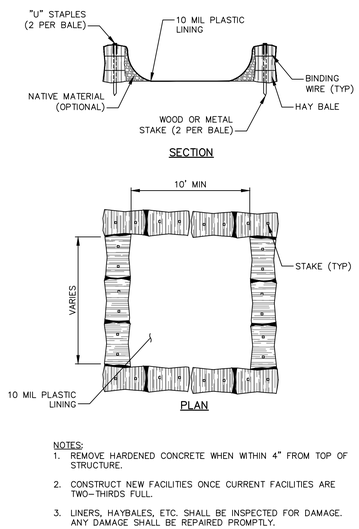

ABOVE GROUND TEMPORARY CONCRETE WASHOUT FACILITY

NOT TO SCALE

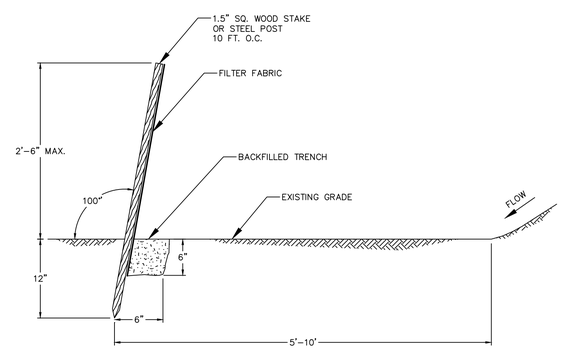

SILT FENCE

NOT TO SCALE

EROSION & SEDIMENT CONTROL NOTES

1. CONSTRUCTION STANDARDS – CONSTRUCT ALL EROSION AND SEDIMENT CONTROL MEASURES IN ACCORDANCE WITH THE STANDARDS AND SPECIFICATIONS OF THE MOST RECENT EDITION OF THE "CONNECTICUT GUIDELINES FOR SOIL EROSION AND SEDIMENT CONTROL" (CT DEP BULLETIN 34). ALL MEASURES SHALL BE MAINTAINED AND UPGRADED TO ACHIEVE PROPER SEDIMENT CONTROL DURING CONSTRUCTION.

2. PLAN IMPLEMENTATION – IMPLEMENT THIS EROSION AND SEDIMENT CONTROL PLAN. THIS IMPLEMENTATION INCLUDES THE INSTALLATION AND MAINTENANCE OF CONTROL MEASURES UNTIL PERMANENT STABILIZATION IS ACHIEVED, INFORMING ALL SUBCONTRACTORS OF THE REQUIREMENTS AND OBJECTIVES OF THE PLAN, AND NOTIFYING THE PROPER MUNICIPAL AGENCY OF ANY TRANSFER OF THIS RESPONSIBILITY. THE OWNER SHALL BE RESPONSIBLE FOR CONVEYING A COPY OF THE EROSION AND SEDIMENT CONTROL PLAN TO THE NEW OWNER IF THE TITLE OF THE LAND IS TRANSFERRED PRIOR TO ACHIEVING PERMANENT STABILIZATION.

3. INSTALLATION SCHEDULE – INSTALL THE CONSTRUCTION ENTRANCE BEFORE CONSTRUCTION TRAFFIC INTO AND OUT OF THE PROJECT AREA BEGINS. INSTALL EROSION AND SEDIMENT CONTROL MEASURES PRIOR TO STUMP REMOVAL AND CONSTRUCTION. INSTALL ADDITIONAL CONTROL MEASURES DURING THE CONSTRUCTION PERIOD, IF DEEMED NECESSARY BY THE OWNER, HIS AGENTS OR AGENTS OF THE MUNICIPALITY.

4. FUGITIVE DUST – CONTROL FUGITIVE DUST USING WATER SPRAYS OR CALCIUM CHLORIDE ON SOIL SURFACES, SWEEPING PAVED AREAS, TEMPORARY WINDBREAKS OR NON-ASPHALTIC SOIL TACKIFIERS.

5. HAY BALE LIFE SPAN – INSTALL HAY BALES WHERE PROTECTION AND EFFECTIVENESS IS REQUIRED FOR LESS THAN 90 DAYS. OTHERWISE, INSTALL SILT FENCE.

6. CATCH BASINS – PROTECT CATCH BASINS WITH PROPER CONTROLS THROUGHOUT THE CONSTRUCTION PERIOD UNTIL ALL DISTURBED AREAS ARE PERMANENTLY STABILIZED.

7. STOCKPILES – ENCIRCLE STOCKPILES OF ERODIBLE SOIL WITH A HAY BALE OR SILT FENCE BARRIER. THE SIDE SLOPES OF ERODIBLE STOCKPILED MATERIAL SHALL BE NO STEEPER THAN 2:1. STOCKPILES THAT ARE NOT TO BE USED WITHIN 30 DAYS SHALL BE SEEDED AND MULCHED IMMEDIATELY AFTER THEY ARE FORMED.

8. TOE OF SLOPE – ESTABLISH AN EROSION CONTROL BARRIER (SILT FENCE OR HAY BALE BARRIER) APPROXIMATELY 5 TO 10 FEET FROM THE PROPOSED TOE OF THE CUT OR FILL AREA PRIOR TO BEGINNING EARTHWORK.

9. SEDIMENT REMOVAL – SEDIMENT REACHING ½ THE HEIGHT OF THE EROSION CONTROL BARRIER SHALL BE REMOVED. REMOVE AND DISPOSE OF SEDIMENT IN A MANNER CONSISTENT WITH THE INTENT OF THE PLAN.

10. SOIL STABILIZATION SCHEDULE – APPLY PERMANENT SOIL STABILIZATION MEASURES TO ALL GRADED AREAS WITHIN 7 DAYS OF ESTABLISHING FINAL GRADE. APPLY TEMPORARY SOIL STABILIZATION MEASURES IF FINAL GRADING IS TO BE DELAYED MORE THAN 30 DAYS.

11. TEMPORARY SEEDING – TEMPORARILY SEED ERODIBLE SOILS THAT WILL BE EXPOSED GREATER THAN 1 BUT LESS THAN 12 MONTHS WITHIN THE FIRST 7 DAYS OF SUSPENDING GRADING OPERATIONS. APPLY LIME AT A RATE OF 90 LBS/1000 SQ. FT. APPLY 10-10-10 FERTILIZER AT A RATE OF 7 ½ LBS/1000 SQ. FT. APPLY PERENNIAL RYE GRASS AT A RATE OF 2 LBS/1000 SQ. FT. TO A DEPTH OF ½ INCH. OPTIMUM SEEDING DATES ARE MARCH 15 TO JULY 1 AND AUGUST 1 TO OCTOBER 15. MULCH FOR SEED APPLIED WITHIN THE OPTIMUM SEEDING DATES SHALL BE APPLIED EVENLY SUCH THAT IT PROVIDES 80%-95% SOIL COVERAGE. MULCH FOR SEED APPLIED OUTSIDE OF THE OPTIMUM SEEDING DATES SHALL BE APPLIED EVENLY SUCH THAT IT PROVIDES 95%-100% COVERAGE.

12. PERMANENT SEEDING – SEED PERMANENT LAWN AREAS IN ACCORDANCE WITH THE SPECIFICATIONS.

13. INSPECTION – THE OWNER SHALL SECURE THE SERVICES OF A SOIL SCIENTIST OR PROFESSIONAL ENGINEER TO VERIFY IN THE FIELD THAT THE CONTROLS REQUIRED BY THIS PLAN ARE PROPERLY INSTALLED AND MAINTAINED. THESE INSPECTIONS SHALL BE NOT LESS FREQUENTLY THAN WEEKLY AND WITHIN 24 HOURS OF THE END OF A STORM HAVING A RAINFALL AMOUNT OF 0.1 INCH OR GREATER. FOLLOWING THESE INSPECTIONS, A WRITTEN REPORT SHALL BE PREPARED, INFORMING THE OWNER OR HIS AGENT NOT LESS FREQUENTLY THAN WEEKLY AND THE MUNICIPALITY NOT LESS FREQUENTLY THAN MONTHLY OF OBSERVATIONS, MAINTENANCE, AND CORRECTIVE ACTIVITIES UNDERTAKEN.

NOT FOR CONSTRUCTION

FUSS & O'NEILL
56 QUARRY ROAD
TRUMBULL, CONNECTICUT 06611
203.374.3748
www.fando.com

0
GRAPHIC SCALE

drawing title: EROSION & SEDIMENT CONTROL DETAILS	STATE OF CONNECTICUT DEPARTMENT OF CONSTRUCTION SERVICES	
REVISIONS: mark / date / description	DRAWING PREPARED BY: CONSIGLI CONSTRUCTION CO,. INC. 72 SUMNER STREET, MILFORD, MA 01757 508-473-2580 P / 508-473-3588 F	date 11/24/2015
		scale NONE
	project: FAIRFIELD REGIONAL FIRE TRAINING CENTER 205 Richard White Way Fairfield, CT	drawn by VC
		approved by JEL
	CAD no. / project no. BI-FP-14 DB	drawing no. CE5.01

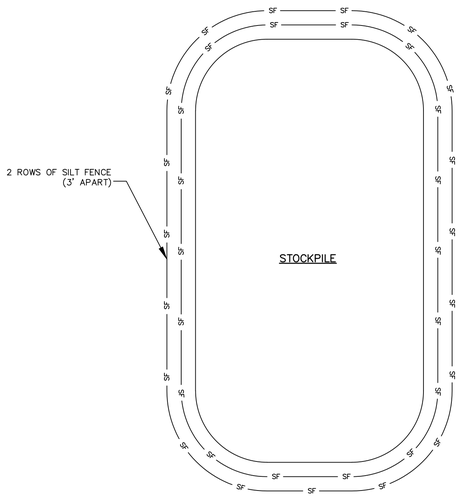

PLAN

STOCKPILE CONTAINMENT

NOT TO SCALE

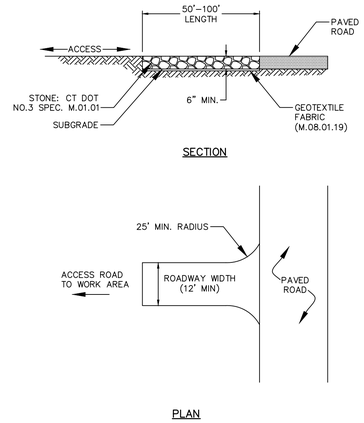

SECTION

PLAN

CONSTRUCTION ENTRANCE

NOT TO SCALE

SEDIMENT TRAP SIZING:

TEMPORARY SEDIMENT TRAP #1 (SE)	TEMPORARY SEDIMENT TRAP #2 (SW)
DRAINAGE AREA=3.67 ac	DRAINAGE AREA=0.75 ac
VOL REQUIRED=493 cy	VOL REQUIRED=101 cy
L=50'	L=25'
W=25'	W=25'
Dw=2'	Dw=1'
Dd=3'	Dd=2'
H=4'	H=3'
WET STORAGE VOL=249 cy	WET STORAGE VOL=124 cy
DRY STORAGE VOL=581 cy	DRY STORAGE VOL=82 cy
STORAGE VOL PROVIDED=530 cy	STORAGE VOL PROVIDED=206 cy

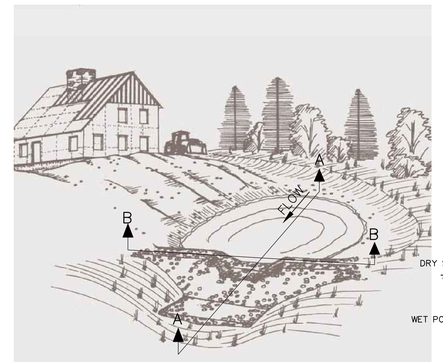

TOP WIDTH VS. HEIGHT
H = HEIGHT OF EMBANKMENT
Ww = WIDTH OF EMBANKMENT

H (FT)	Ww(ft)
1.5	2.0
2.0	2.0
2.5	2.5
3.0	2.5
3.5	3.0
4.0	3.0
4.5	4.0
5.0	4.5

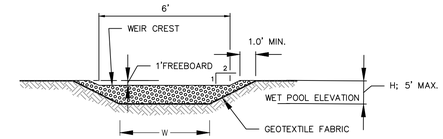

SECTION B–B

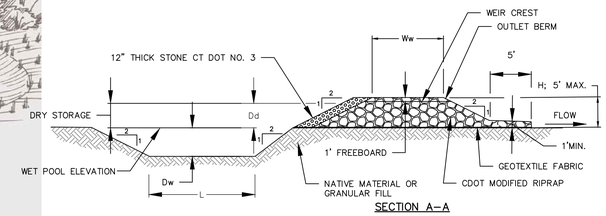

SECTION A–A

NOTE:
EXCAVATE AND DISPOSE OF ACCUMULATED SEDIMENT IN TRAP WHEN ACCUMULATED SEDIMENT LEVELS REACH 1/2 THE HEIGHT OF Dw.

TEMPORARY SEDIMENT TRAP

NOT TO SCALE

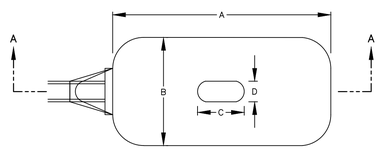

PLAN

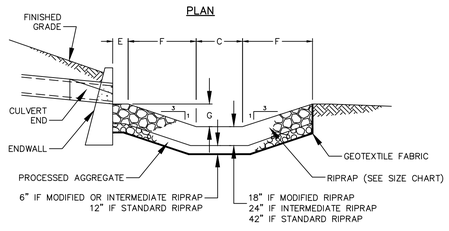

SECTION A–A

PIPE SIZE	A	B	C	D	E	F	G	RIPRAP TYPE
12" OR LESS	10'	8'	3'	2'	1'	3'	1'	MODIFIED
15"	12'	10'	4'	2–6"	1'	3'–9"	1–3"	MODIFIED
18"	14'–6"	12'	4'–6"	3'	1'	4'–6"	1'–6"	INTERMEDIATE
21"	17'	14'	5'–6"	3'–6"	1'	5'–3"	1'–9"	INTERMEDIATE
24"	19'	16'	6'	4'	1'	6'	2'	INTERMEDIATE
30"	23'–6"	20'	7'–6"	5'	1'	7'–6"	2'–6"	STANDARD
36"	28'	24'	9'	6'	1'	9'	3'	STANDARD

RIP–RAP OUTLET PROTECTION

NOT TO SCALE

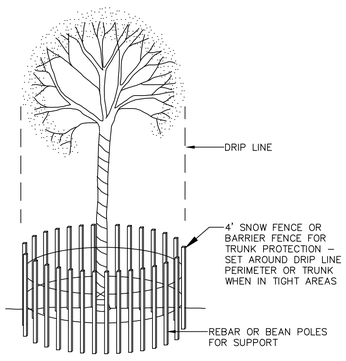

TREE PROTECTION

NOT TO SCALE

NOT FOR CONSTRUCTION

FUSS & O'NEILL
56 QUARRY ROAD
TRUMBULL, CONNECTICUT 06611
203.374.3748
www.fando.com

0
GRAPHIC SCALE

drawing title:
EROSION & SEDIMENT CONTROL DETAILS

REVISIONS:

mark	date	description

STATE OF CONNECTICUT
DEPARTMENT OF CONSTRUCTION SERVICES

DRAWING PREPARED BY:
CONSIGLI CONSTRUCTION CO,. INC.
72 SUMNER STREET, MILFORD, MA 01757
508-473-2580 P / 508-473-3588 F

project:
FAIRFIELD REGIONAL FIRE TRAINING CENTER
205 Richard White Way
Fairfield, CT

CAD no.
project no. BI-FP-14 DB

date 11/24/2015
scale NONE
drawn by VC
approved by JEL
drawing no. CE5.02

DETAIL TO BE PROVIDED:

ROLLING GATE

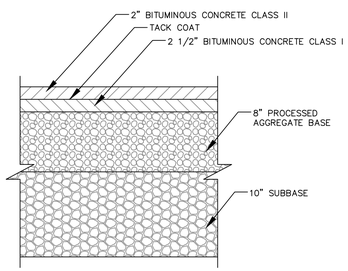

BITUMINOUS CONCRETE PAVEMENT (HEAVY DUTY)

NOT TO SCALE

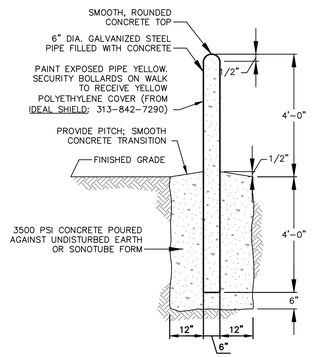

BOLLARD

SCALE: NOT TO SCALE

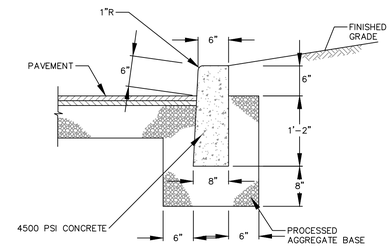

NOTES

1. 1 INCH DEEP BEVELED JOINT AT TOP AND FACE OF CURB EVERY 10 FEET.
2. 1/2 INCH EXPANSION JOINT AND FILLER EVERY 30 FEET.
3. 1/2 INCH EXPANSION JOINT AND FILLER WHEN CURB IS ADJACENT TO CONCRETE SIDEWALK.

CONCRETE CURB

NOT TO SCALE

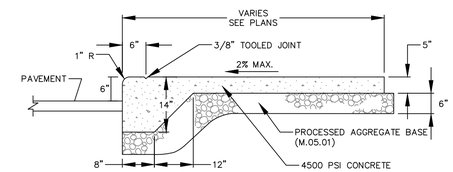

MONOLITHIC CONCRETE CURB AND WALK

NOT TO SCALE

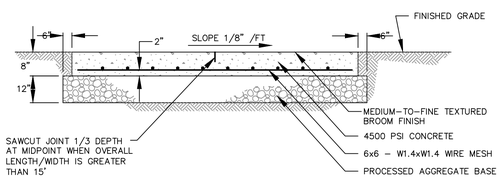

CONCRETE PAD

NOT TO SCALE

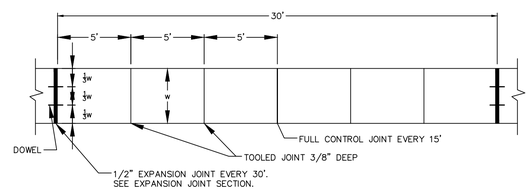

PLAN

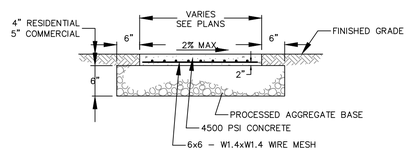

SIDEWALK SECTION

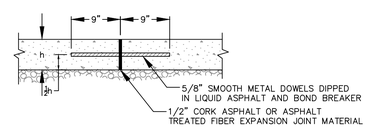

EXPANSION JOINT SECTION

CONCRETE SIDEWALK

NOT TO SCALE

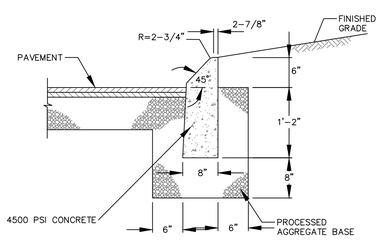

CONCRETE ROLL-OVER CURB

NOT TO SCALE

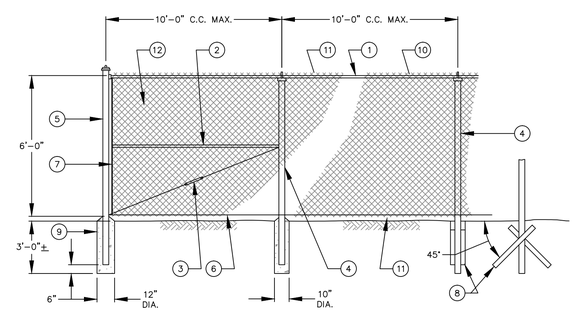

ELEVATION

NOTES

1. FOOTING DESIGN TO BE CHECKED BY A PROFESSIONAL ENGINEER FOR WIND LOADS IF SLATS ARE USED OR IF POOR SOIL CONDITIONS EXIST.
2. STRAIGHT RUNS BETWEEN BRACED POSTS SHALL NOT EXCEED 500 FT.
3. FENCE DETAILS ARE INTENDED AS A GUIDE ONLY. ALL FENCE MATERIALS AND CONSTRUCTION METHODS SHALL BE APPROVED BY A PROFESSIONAL ENGINEER AND FENCE MANUFACTURER.

CHAIN LINK FENCE LEGEND

(1) 1 5/8" O.D. TOP RAIL ATTACH FABRIC WITH 9 GUAGE WIRE CLIP EVERY 24"

(2) 1 5/8" O.D. BRACE FOR RAIL FENCES OVER 6 FEET HIGH AND ALL FENCES WITHOUT TOP RAIL

(3) 5/16" TRUSS ROD AND TURNBUCKLE

(4) INTERMEDIATE POST

FENCE HEIGHT	SQUARE POST	ROUND POST
6 FEET AND LESS	1 7/8"	2"
OVER 6 FEET	2 1/4"	2 1/2"

ATTACH TO C.L. FABRIC WITH CLIPS EVERY 15"

(5) END OR CORNER POST

FENCE HEIGHT	SQUARE POST	ROUND POST
6 FEET AND LESS	2"	2 1/2"
OVER 6 FEET	2 1/2"	3"

(6) 6 GAUGE BOTTOM TENSION WIRE ATTACH TO FABRIC WITH HOG RING AT 24" C.C.

(7) TENSION ROD ATTACHED TO END OR CORNER POST

(8) 2 30" MIN. LENGTH DRIVE ANCHORS DRIVEN THROUGH FITTINGS AT 90° TO FENCE LINE INTO EARTH AT 45° (TO BE USED IN PLACE OF CONCRETE FOOTING. SEE FOOTING DESIGN NOTE NO. 1)

(9) 3500 PSI CONCRETE FOOTING 36" DEEP WITH 12" DIA. AT END POST AND 10" DIA. AT INTERMEDIATE POST. HOLE CORE IN UNDISTURBED OR COMPACTED SOIL. (SEE NOTE NO. 1)

(10) 6 GAUGE TENSION WIRE WHEN TOP RAIL IS NOT USED.

(11) FABRIC SELVAGE:
UNDER 6 FEET SHALL BE KNUCKLED TOP AND BOTTOM
6 FEET AND OVER SHALL BE KNUCKLED BOTTOM AND TWISTED ON THE TOP
RECREATIONAL FENCING, REGARDLESS OF HEIGHT, SHALL BE KNUCKLED TOP AND BOTTOM

(12) 9 GAUGE 2" WIRE MESH FABRIC (COMMERCIAL) BLACK VINYL COATED.

CHAIN LINK FENCE

SCALE: NOT TO SCALE

NOT FOR CONSTRUCTION

FUSS & O'NEILL
56 QUARRY ROAD
TRUMBULL, CONNECTICUT 06611
203.374.3748
www.fando.com

0
GRAPHIC SCALE

drawing title: CONSTRUCTION DETAILS

REVISIONS:

mark	date	description

STATE OF CONNECTICUT
DEPARTMENT OF CONSTRUCTION SERVICES

DRAWING PREPARED BY:
CONSIGLI CONSTRUCTION CO,. INC.
72 SUMNER STREET, MILFORD, MA 01757
508-473-2580 P / 508-473-3588 F

project:
FAIRFIELD REGIONAL FIRE TRAINING CENTER
205 Richard White Way
Fairfield, CT

CAD no.
project no. BI-FP-14 DB

date 11/24/2015
scale NONE
drawn by VC
approved by JEL
drawing no. CD5.01

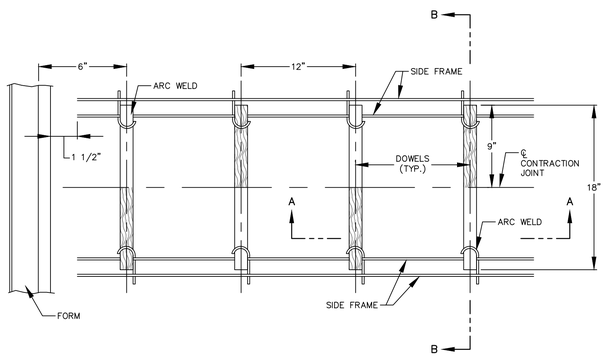

PLAN

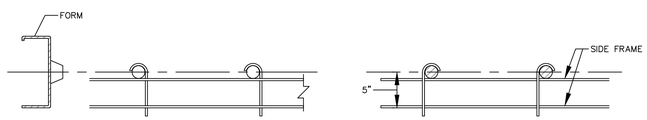

SIDE VIEW

SECTION A–A

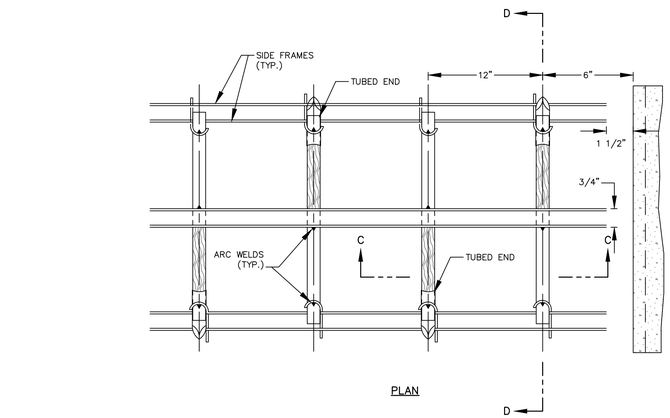

PLAN

SECTION C–C

SIDE VIEW

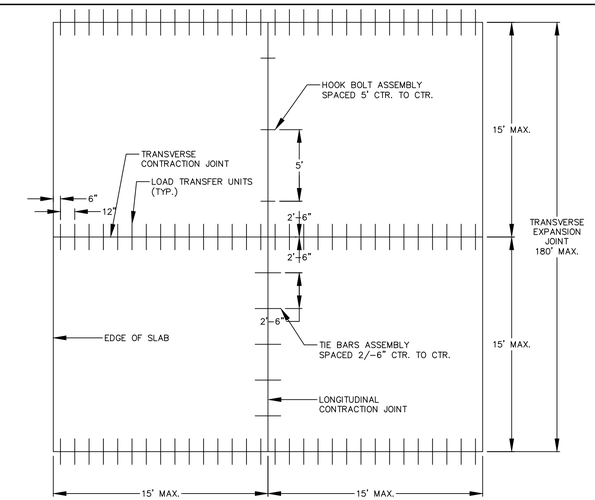

SCHEMATIC OF TYPICAL LONGITUDINAL AND TRANSVERSE CONTRACTION JOINT LOCATIONS

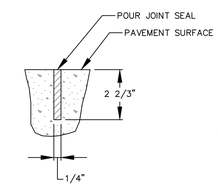

*DETAIL OF SAWED LONGITUDINAL JOINT

*JOINT MAY BE TOOLED INSTEAD OF SAWCUT IF WIDTH OF POUR ALLOWS

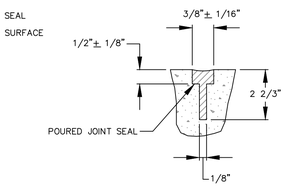

DETAIL OF SAWED TRANSVERSE CONTRACTION JOINT

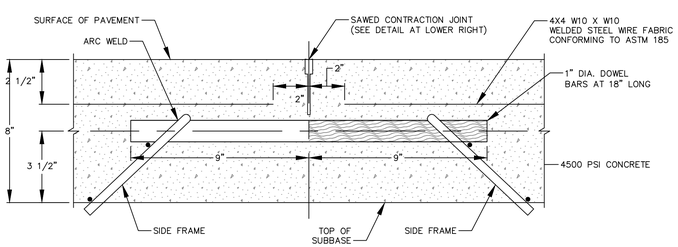

SECTION B–B

LOAD TRANSFER UNIT
TRANSVERSE CONTRACTION JOINT

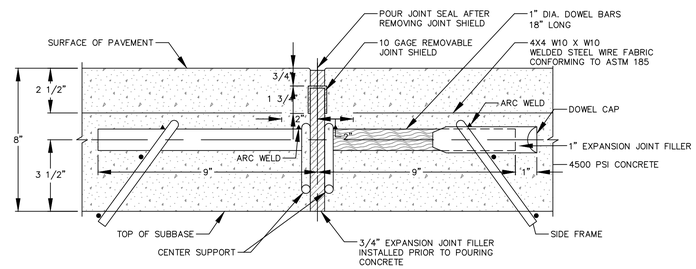

SECTION D–D

LOAD TRANSFER UNIT
TRANSVERSE EXPANSION JOINT

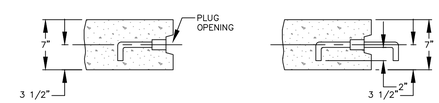

SECTION THROUGH ROAD SLAB SHOWING HOOK BOLT PARTS INSTALLED.

HOOK BOLT ASSEMBLY

SPACING 5'–0" CTR. TO CTR. ALONG JOINT

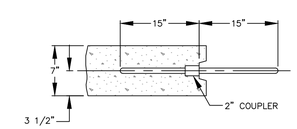

KEYWAY CONSTRUCTION

TIE BAR ASSEMBLY

SPACING 2'–6" CTR. TO CTR. ALONG JOINT

NOTE: EITHER ASSEMBLY MAY BE USED. USE DEFORMED STEEL BAR #4 CONFIRMING TO ASTM A615 GRADE 60.

LONGITUDINAL CONTRACTION JOINT

LONGITUDINAL JOINTS TO BE SPACED AT 15'–0" (MAX.) CTR. TO CTR.

NOTES:

1. SHADED HALF OF DOWEL DENOTES THE END WHICH HAS BEEN COATED IN ACCORDANCE WITH AASHTO M–254 (TYPE B)
2. ALL SIDE FRAMES AND CENTER SUPPORTS SHALL BE #1 GAGE WIRE OR 5/16" BARS THROUGHOUT, AND SHALL CONFORM TO THE REQUIREMENTS OF ASTM A615.

HEAVY DUTY CONCRETE PAVEMENT (FINAL CONCRETE PAD/ PAVEMENT SHALL BE COORDINATED WITH PROP MANUFACTURER)

NOT TO SCALE

NOT FOR CONSTRUCTION

FUSS & O'NEILL
56 QUARRY ROAD
TRUMBULL, CONNECTICUT 06611
203.374.3748
www.fando.com

0
GRAPHIC SCALE

drawing title: CONSTRUCTION DETAILS

REVISIONS:

mark	date	description

STATE OF CONNECTICUT
DEPARTMENT OF CONSTRUCTION SERVICES

DRAWING PREPARED BY:
CONSIGLI CONSTRUCTION CO,. INC.
72 SUMNER STREET, MILFORD, MA 01757
508-473-2580 P / 508-473-3588 F

project:
FAIRFIELD REGIONAL FIRE TRAINING CENTER
205 Richard White Way
Fairfield, CT

CAD no.
project no. BI-FP-14 DB

date	11/24/2015
scale	NONE
drawn by	VC
approved by	JEL
drawing no.	CD5.02

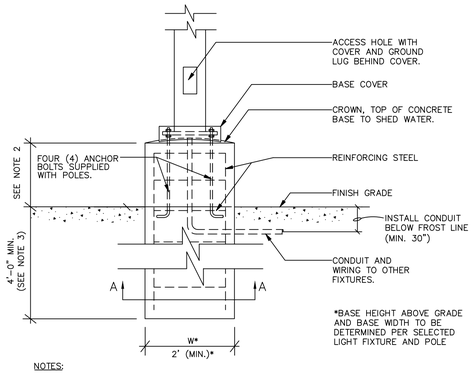

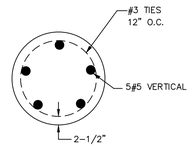

SECTION A–A

NOTES:

1. REFER TO PROPOSED SITE LIGHTING PHOTOMETRIC PLAN FOR LUMINARE FIXTURE.
2. EXTEND CONCRETE POLE BASE 2'-6" ABOVE FINISHED GRADE IN PARKING AREAS & 4" ABOVE FINISHED GRADE OF LAWN OR MULCHED LANDSCAPE AREAS.
3. CONTRACTOR SHALL CONFIRM FOOTING SIZE WITH LIGHT POLE MANUFACTURER.

LIGHT POLE BASE

NOT TO SCALE

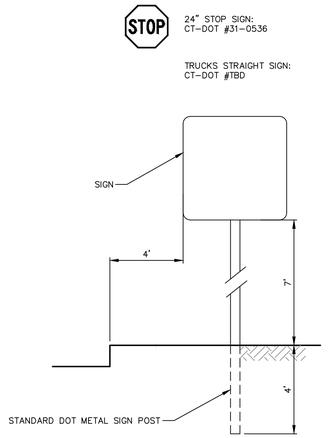

NOTE:
TYPICAL SIGN DETAIL: REFER TO CTDOT STANDARD SHEET – METAL SIGN POST AND SIGN MOUNTING DETAILS TR-1208_02

SIGN

NOT TO SCALE

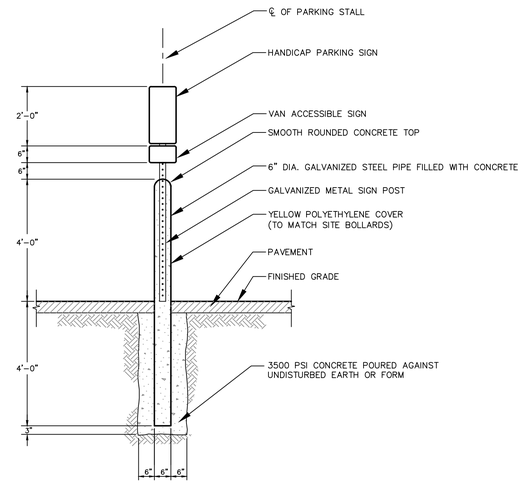

ACCESSIBLE PARKING SIGN POST

NOT TO SCALE

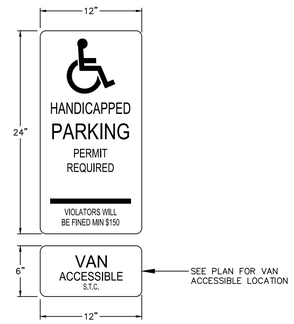

NOTES:

CDOT NUMBER: 31–0629
ALUMINUM THICKNESS: .080"
BACKGROUND: BLUE (REF.)
LEGEND: SILVER (REF.)
POSTS: SEE "ACCESSIBLE PARKING SIGN AND POST" DETAIL

HANDICAP PARKING SIGN

NOT TO SCALE

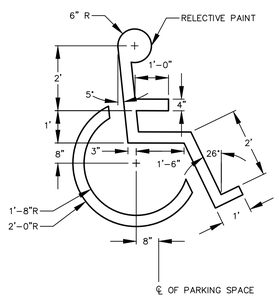

HANDICAP SYMBOL

NOT TO SCALE

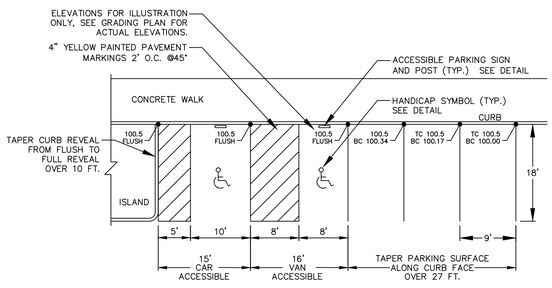

HANDICAP PARKING SPACES ALONG WALK

NOT TO SCALE

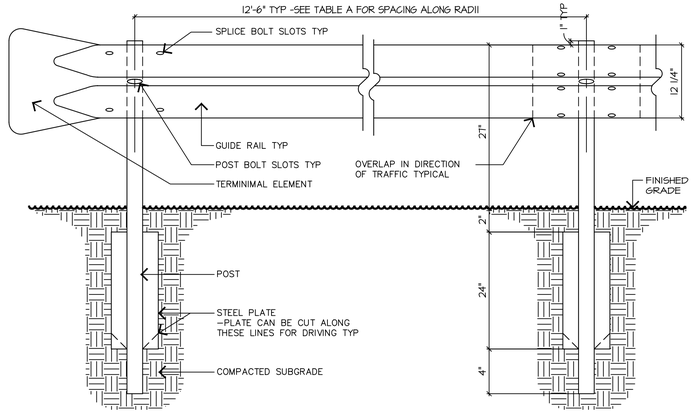

ELEVATION WITH TERMINAL ELEMENT

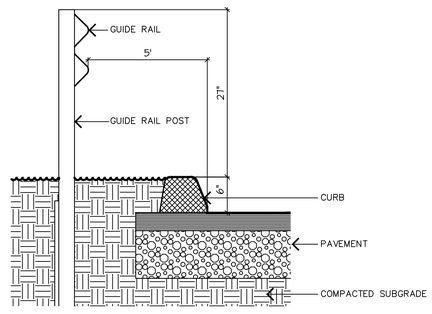

SECTION

METAL BEAM GUIDE RAIL

NOT TO SCALE

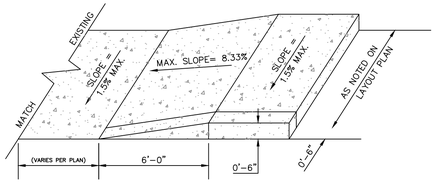

HANDICAP RAMP SLOPE

NOT TO SCALE

NOT FOR CONSTRUCTION

FUSS & O'NEILL
56 QUARRY ROAD
TRUMBULL, CONNECTICUT 06611
203.374.3748
www.fando.com

0
GRAPHIC SCALE

drawing title: CONSTRUCTION DETAILS			**STATE OF CONNECTICUT** DEPARTMENT OF CONSTRUCTION SERVICES
REVISIONS:			
mark	date	description	
DRAWING PREPARED BY: **CONSIGLI CONSTRUCTION CO,. INC.** 72 SUMNER STREET, MILFORD, MA 01757 508-473-2580 P / 508-473-3588 F			date 11/24/2015
			scale NONE
project: FAIRFIELD REGIONAL FIRE TRAINING CENTER 205 Richard White Way Fairfield, CT			drawn by VC
			approved by JEL
CAD no.	project no. BI-FP-14 DB		drawing no. CD5.03

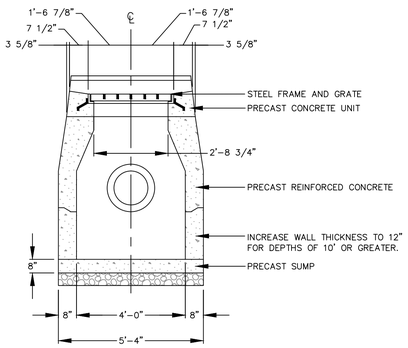

FRONT ELEVATION

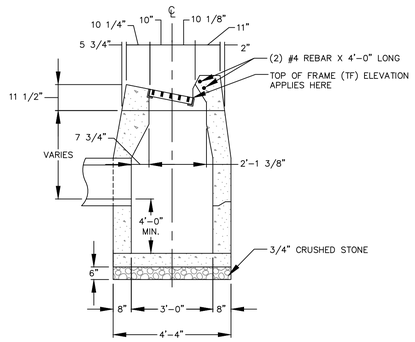

SIDE ELEVATION

TYPE "C" CATCH BASIN

NOT TO SCALE

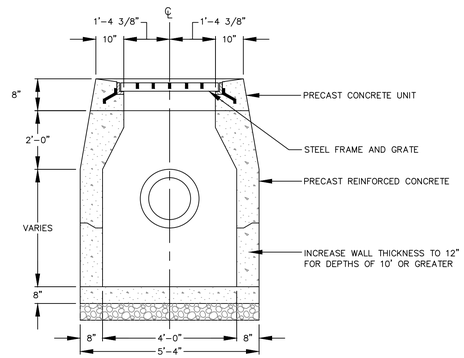

FRONT ELEVATION

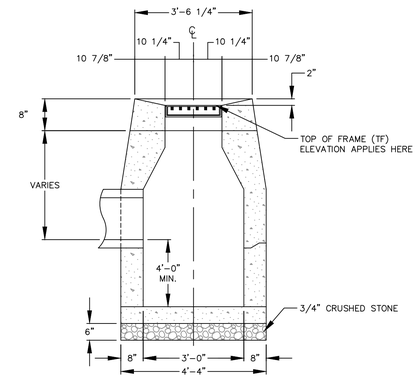

SIDE ELEVATION

TYPE "C-L" CATCH BASIN

NOT TO SCALE

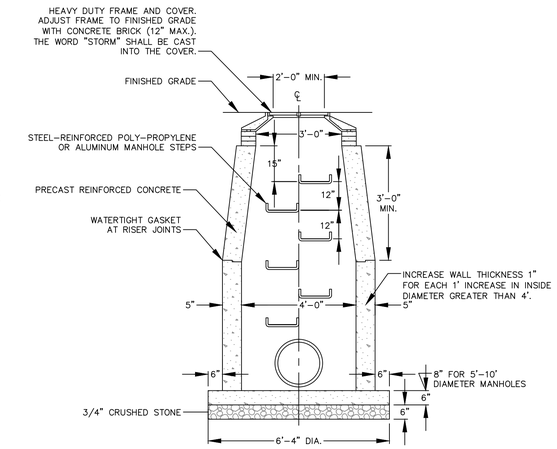

STORM MANHOLE

NOT TO SCALE

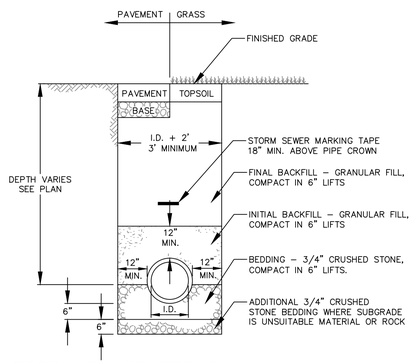

STORM SEWER TRENCH

SCALE: N.T.S.

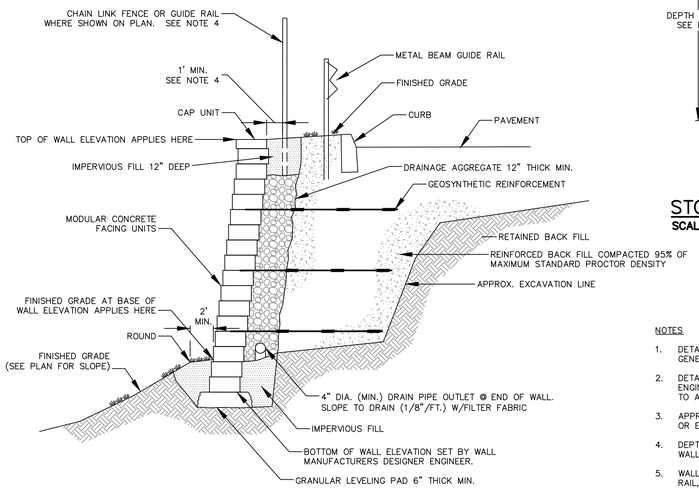

TYPICAL SECTION

NOTES

1. DETAILS AND NOTES HEREON ARE GENERIC AND ARE INTENDED TO GIVE A GENERAL DESCRIPTION OF THE WALL. THEY ARE NOT FOR CONSTRUCTION.
2. DETAILED WALL CONSTRUCTION PLANS, STAMPED BY A PROFESSIONAL ENGINEER LICENSED IN THE STATE OF CONNECTICUT, SHALL BE SUBMITTED TO AND APPROVED BY THE ENGINEER PRIOR TO CONSTRUCTION.
3. APPROVED WALL MANUFACTURERS INCLUDE VERSA-LOK, KEYSTONE, MESA OR EQUAL.
4. DEPTH OF GUIDE RAIL POST OR FENCE POST SHALL BE DETERMINED BY THE WALL DESIGNER WHEN IN PROXIMITY TO BACK OF WALL.
5. WALL DESIGN SHALL TAKE INTO CONSIDERATION DESIGN OF FENCE, GUIDE RAIL, CURB, AND UTILITY POLES IN PROXIMITY TO WALL.

MODULAR CONCRETE BLOCK RETAINING WALL (TO BE DETERMINED)

SCALE: N.T.S.

(OR APPROVED EQUAL)

F-55 AUTOMATIC DRAINAGE GATE

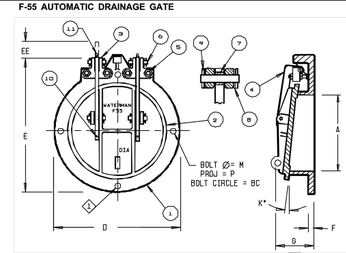

PARTS LIST	
No.	Name
1	FRAME
2	COVER
3	PIVOT LUG
4	HINGE LINK
5	HINGE STUDS & NUTS
6	HINGE PIN
7	HINGE BUSHING
8	WASHERS
9	SPRING PIN
10	SET SCREW
11	LUBE FITTING (optional)

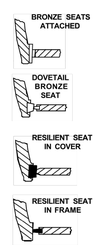

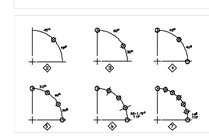

1. 25 Lb. & 125 Lb. Std. Drilling available on request for all gates except 15" & 21".
2. For use with seating heads up to 55 feet. 108" gate suitable for use to 30ft. only.

[1] "F" Dimensions are machined dimensions, may be 1/4" thicker.

[4] If grout pad mounting is used, add grout thickness to dimension.

GATE DIMENSIONS IN INCHES

GATE SIZE A	4	6	8	10	12	14	15	16	18	20	21	24	30	36	42	48	54	60	66	72	84	96	108
BC	7½	9½	11½	14¼	17	18½	20	21½	22½	25	25	29½	36	42½	49½	56	62½	69¼	76	82½	95½	108½	119¼
D	9	11	13½	16	19	21	22½	23½	25	27½	27½	32	38½	46	53	59½	66½	73	80	86½	99½	113½	124
E	8¾	12	14¼	16	19	22	25	24	28½	28	30	35	40½	46½	54¼	66	72	78	85½	92½	105½	119	130
EE	1¼	2	2½	2½	3	3¼	3¼	3	3¼	3½	3½	2½	3	3¼	3¼	4¼	4¼	6	6¼	7	10	10	10	10
F [1]	¼	¼	¼	7/16	¼	¼	¼	¼	¼	1	1	1	1	1	1½	1¼	1½	1½	1½	1¼	2½	2½	2½	2½
G	3 5/16	2½	2½	3	3½	6	6½	6½	7	7	7½	8	8	8	8½	10	10	10 5/16	14	14¼	17	21	21
K	5	5	5	5	5	5	5	5	5	5	5	5	2½	2½	2½	2½	2½	2½	2½	2½	2½	2½	2½
M	¼	¼	¼	¼	¼	¼	¼	¼	¼	¼	¼	¼	¼	¼	¼	1	1	1	1¼	1¼	1¼	1¼	1¼
P	½	½	1½	1½	1½	½	½	½	1½	1½	1½	1½	1½	2½	2½	2½	2½	2½	3	3	3½	4	4½	4½
NO. OF BOLTS	4	4	4	6	6	6	6	6	6	8	8	8	8	8	12	12	12	12	12	12	16	16	16	24
Ø	2	1	1	3	3	3	3	3	3	4	4	4	4	4	5	5	5	5	5	6	6	6	6	7

NOTE

1. INSTALL PER MANUFACTURERS RECOMMENDATION

NOTE: FOR PRELIMINARY DESIGN PURPOSES ONLY
DO NOT USE FOR INSTALLATION
UNLESS PART OF CERTIFIED & APPROVED SUBMITTAL

Waterman Industries

2

DRAINAGE GATE

NOT TO SCALE

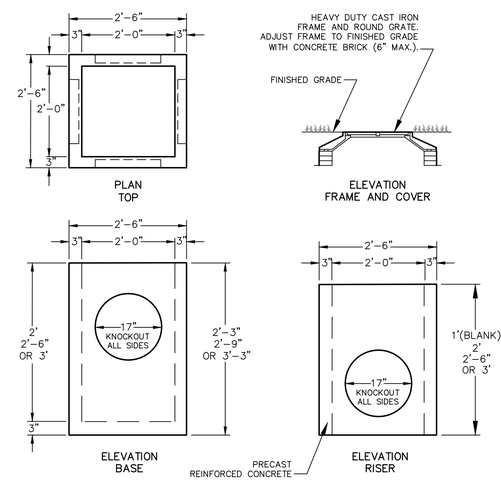

YARD DRAIN (HEAVY DUTY)

NOT TO SCALE

NOT FOR CONSTRUCTION

FUSS & O'NEILL
56 QUARRY ROAD
TRUMBULL, CONNECTICUT 06611
203.374.3748
www.fando.com

0
GRAPHIC SCALE

drawing title: CONSTRUCTION DETAILS

REVISIONS:

mark	date	description

STATE OF CONNECTICUT
DEPARTMENT OF CONSTRUCTION SERVICES

DRAWING PREPARED BY:
CONSIGLI CONSTRUCTION CO,. INC.
72 SUMNER STREET, MILFORD, MA 01757
508-473-2580 P / 508-473-3588 F

project:
FAIRFIELD REGIONAL FIRE TRAINING CENTER
205 Richard White Way
Fairfield, CT

CAD no.
project no. BI-FP-14 DB

date	11/24/2015
scale	NONE
drawn by	VC
approved by	JEL
drawing no.	CD5.04

GENERAL SPECIFICATIONS

NO. REQ'D: (1)
CAPACITY: 2000 GALLON
TYPE: HT, HIGHGUARD, SINGLE WALL
MATERIAL: MILD CARBON STEEL
FLOW RATE: 200 GPM
GAUGE:
SHELL– 7 GA.
HEADS– 7 GA.
SURFACE PREP: SP–6 BLAST ALL EXTERIOR SURFACES

COATING:	**MATERIAL**	**THICKNESS**
EXTERIOR–	HIGHGUARD	75 MILS
INTERIOR–	NONE	

CONSTRUCTION : LAP FIT & WELD ALL EXTERIOR SEAMS
OPERATING PRESSURE : ATMOSPHERIC
NOTES:
1. POLYURETHANE HIGHGUARD TANK IS NOT APPROVED FOR THE STORAGE OF HEATED PRODUCTS
2. TANK HAS 30 YEAR LIMITED WARRANTY
3. 15000 VOLT SPARK TEST PROVIDED AT FACTORY
4. ALL VENT PIPING BY INSTALLER

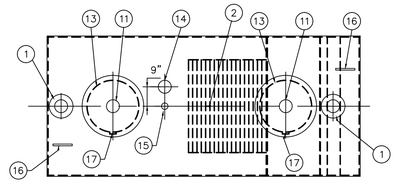

PLAN

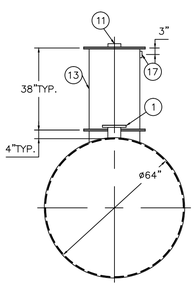

END VIEW

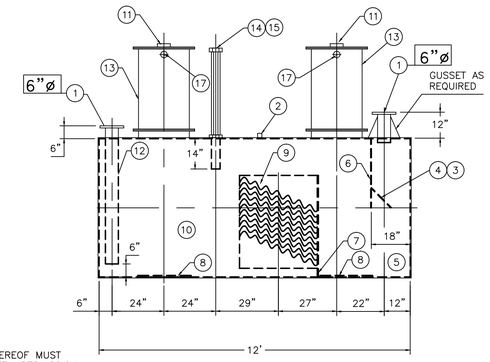

ELEVATION

PROVIDED EQUIPMENT

1. 150# R.F.S.O. FLANGE
2. MONITOR LUG
3. VELOCITY HEAD DIFFUSION BAFFLE
4. WEAR PLATE
5. SEDIMENT CHAMBER
6. UNDERFLOW BAFFLE
7. SLUDGE BAFFLE
8. STRIKER PLATES
9. PARALLEL CORRUGATED PLATE COALESCER
10. OIL/WATER SEPARATOR CHAMBER
11. 4"ø FTG.FOR GAUGE WITH PLUG TYP. BOTH MANWAYS
12. OUTLET DOWNCOMER
13. 24" MANWAY WITH BOLT–ON EXTENSION SHIPPED LOOSE
14. 4"ø FTG. FOR OIL PUMP–OUT W/ INTERNAL PIPE INSTALLED & RISER PIPE SHIPPED LOOSE
15. 2"ø FTG. FOR LEVEL SENSOR W/ RISER PIPE SHIPPED LOOSE
16. LIFTING LUG
17. 2"ø FTG.FOR VENT TYP. BOTH MANWAYS

HIGHLAND TANK & MFG Co.
2000 GALLON OIL WATER SEPARATOR
HT, HIGHGUARD, SINGLE WALL
02000HGSWHT

(OR APPROVED EQUAL)

NOTE

ALL RIGHTS RESERVED. THIS DRAWING OR ANY PART THEREOF MUST NOT BE REPRODUCED IN ANY FORM WITHOUT THE WRITTEN PERMISSION OF HIGHLAND TANK.

HIGHLAND TANK SHALL BE RESPONSIBLE ONLY FOR ITEMS INDICATED ON THIS FABRICATION DRAWING UNLESS OTHERWISE NOTED. CUSTOMER IS RESPONSIBLE FOR VERIFYING CORRECTNESS OF SIZE / LOCATION OF FITTINGS , ACCESSORIES & COATINGS SHOWN ON THIS DRAWING.

ANCHORING OF UNIT MAY BE REQUIRED IF GROUNDWATER IS ENCOUNTERED.

OIL / WATER SEPARATOR UNIT: 02000HGSWHT BY HIGHLAND TANK & MFG Co.

NOT TO SCALE

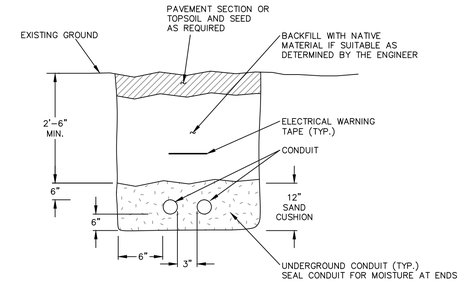

UNDERGROUND CONDUIT TRENCH NOTES

1. INSTALL ELECTRICAL MARKING TAPE ABOVE THE ELECTRIC CONDUIT AND BURIED ELECTRIC WIRING.
2. CONDUITS FOR TELEPHONE AND COMMUNICATIONS ARE TO BE 4" SCH40 PVC.
3. CONDUITS FOR PRIMARY ELECTRIC SERVICE ARE TO BE 4" SCH40 PVC WITH CONCRETE ENCASEMENT OR 4" GALVANIZED STEEL.
4. CONDUITS FOR SECONDARY ELECTRIC SERVICE ARE TO BE

UNDERGROUND CONDUIT TRENCH DETAIL

NOT TO SCALE

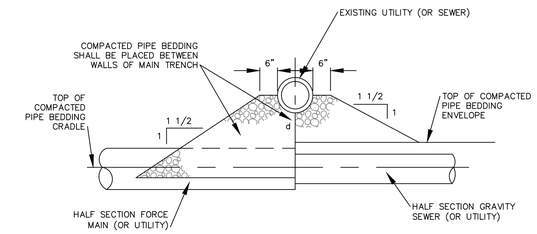

TYPE A (d > 12")

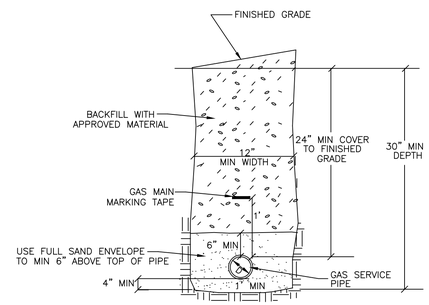

GAS SERVICE TRENCH

NOT TO SCALE

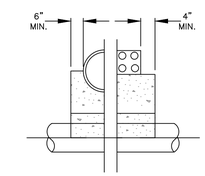

HALF SECTION

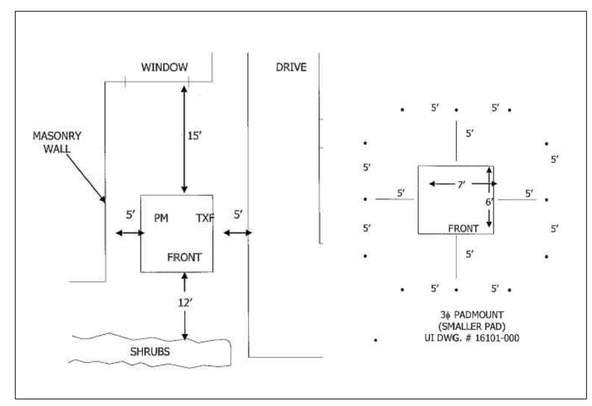

PAD MOUNTED TRANSFORMER LOCATION TO BUILDINGS AND ROADWAYS

NOT TO SCALE

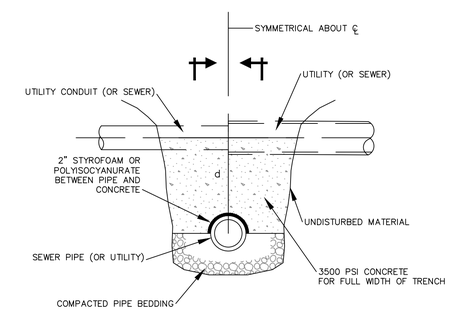

TYPE B (d < 12")

UTILITY SUPPORT NOTES

1. d=DISTANCE FROM TOP OF SEWER PIPE TO THE BOTTOM OF THE UTILITY PIPE
2. SUPPORTS TO BE LOCATED AS SHOWN ON THE DRAWINGS OR AS DIRECTED BY THE ENGINEER

TYPICAL SUPPORT FOR UTILITIES

NOT TO SCALE

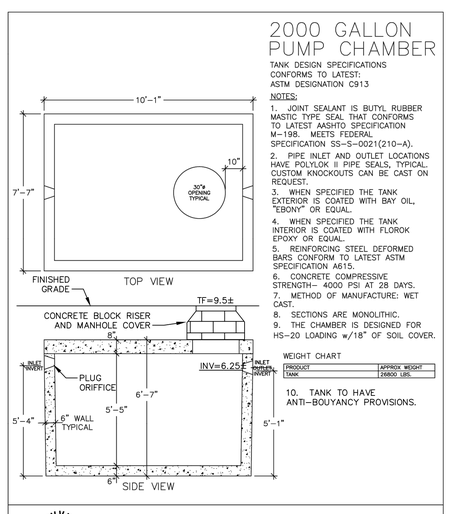

(OR APPROVED EQUAL)

2000 GALLON UST FOR FOAM COLLECTION

NOT TO SCALE

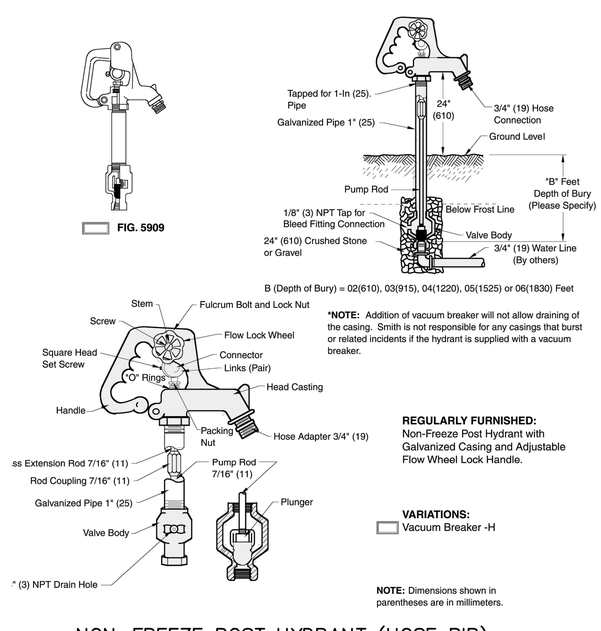

*NOTE: Addition of vacuum breaker will not allow draining of the casing. Smith is not responsible for any casings that burst or related incidents if the hydrant is supplied with a vacuum breaker.

REGULARLY FURNISHED:
Non-Freeze Post Hydrant with Galvanized Casing and Adjustable Flow Wheel Lock Handle.

VARIATIONS:
Vacuum Breaker -H

NOTE: Dimensions shown in parentheses are in millimeters.

NON–FREEZE POST HYDRANT (HOSE BIB)

NOT TO SCALE

NOT FOR CONSTRUCTION

FUSS & O'NEILL
56 QUARRY ROAD
TRUMBULL, CONNECTICUT 06611
203.374.3748
www.fando.com

0
GRAPHIC SCALE

drawing title: CONSTRUCTION DETAILS			STATE OF CONNECTICUT DEPARTMENT OF CONSTRUCTION SERVICES	
REVISIONS:				
mark	date	description	DRAWING PREPARED BY: CONSIGLI CONSTRUCTION CO., INC. 72 SUMNER STREET, MILFORD, MA 01757 508-473-2580 P / 508-473-3588 F	date 11/24/2015
				scale NONE
			project: FAIRFIELD REGIONAL FIRE TRAINING CENTER 205 Richard White Way Fairfield, CT	drawn by VC
				approved by JEL
			CAD no. / project no. BI-FP-14 DB	drawing no. CD5.05

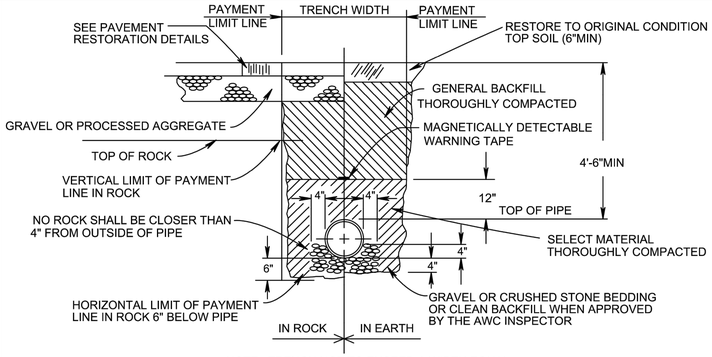

NOTE: TRENCH NOT TO EXCEED A WIDTH EQUAL TO THE OUTSIDE PIPE DIA. + 3'-4"

REFER TO PAVEMENT RESTORATION PLANS FOR TEMPORARY AND PERMANENT PAVEMENT REPAIR DETAILS

TEMPORARY PAVEMENT REPAIR LIMITS	
PIPE SIZE	TRENCH WIDTH *
6"	4'-0"
8"	4'-0"
12"	4'-0"
16"	4'-0"
20"	5'-0"
24"	5'-0"
30"	6'-0"
36"	6'-0"

* IF TRENCH BOXES ARE USED ADD 2' TO ALL TRENCH WIDTHS

TYPICAL TRENCH DETAIL

NOT TO SCALE

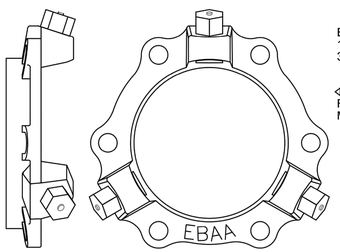

EBAA IRON
1106 MEALUG
350 PSI RATING
UL
FM RATED 175 PSI
FOR USE ON DUCTILE IRON PIPE
MADE IN THE USA

6" DIP RESTRAINT

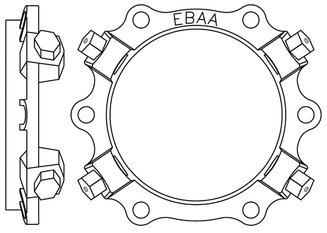

EBAA IRON
1108 MEGALUG
350 PSI RATING
UL
FM RATED 175 PSI
FOR USE ON DUCTILE IRON PIPE
MADE IN THE USA

8" DIP RESTRAINT

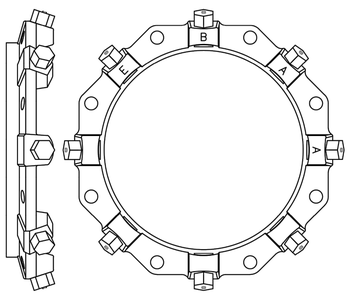

EBAA IRON
1112 MEGALUG
350 PSI RATING
UL
FM RATED 175 PSI
FOR USE ON DUCTILE IRON PIPE
MADE IN THE USA

12" DIP RESTRAINT

"MEGALUG" D.I. PIPE RESTRAINTS

NOT TO SCALE

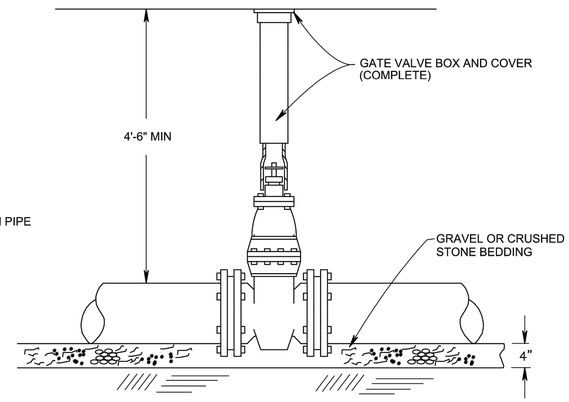

TYPICAL MJ GATE VALVE INSTALLATION

NOT TO SCALE

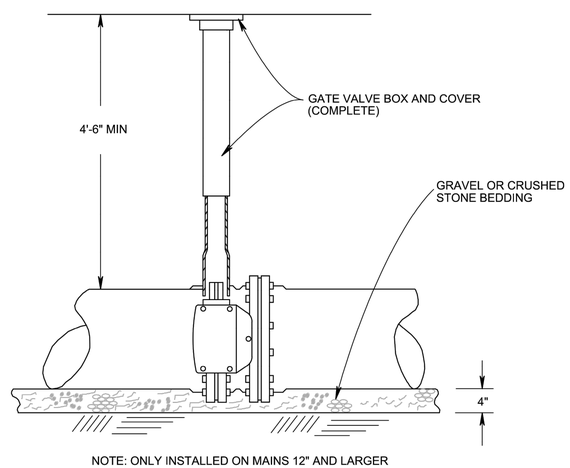

NOTE: ONLY INSTALLED ON MAINS 12" AND LARGER

TYPICAL MJ BUTTERFLY VALVE INSTALLATION

NOT TO SCALE

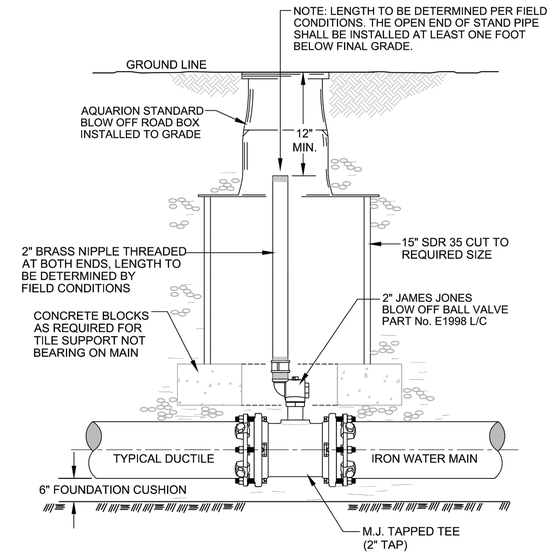

TYPICAL BLOW-OFF & AIR VENT INSTALLATION DETAIL

NOT TO SCALE

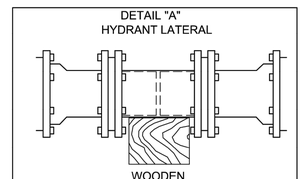

RESTRAINED MECHANICAL JOINT, SOLID SLEEVE OR FLEXIBLE BOLTED RESTRAINING COUPLER FOR REPLACEMENT OR EXTENSIONS TO EXISTING LATERALS
NOTE: USE ONLY WHERE PIPE DIAMETER PERMITS

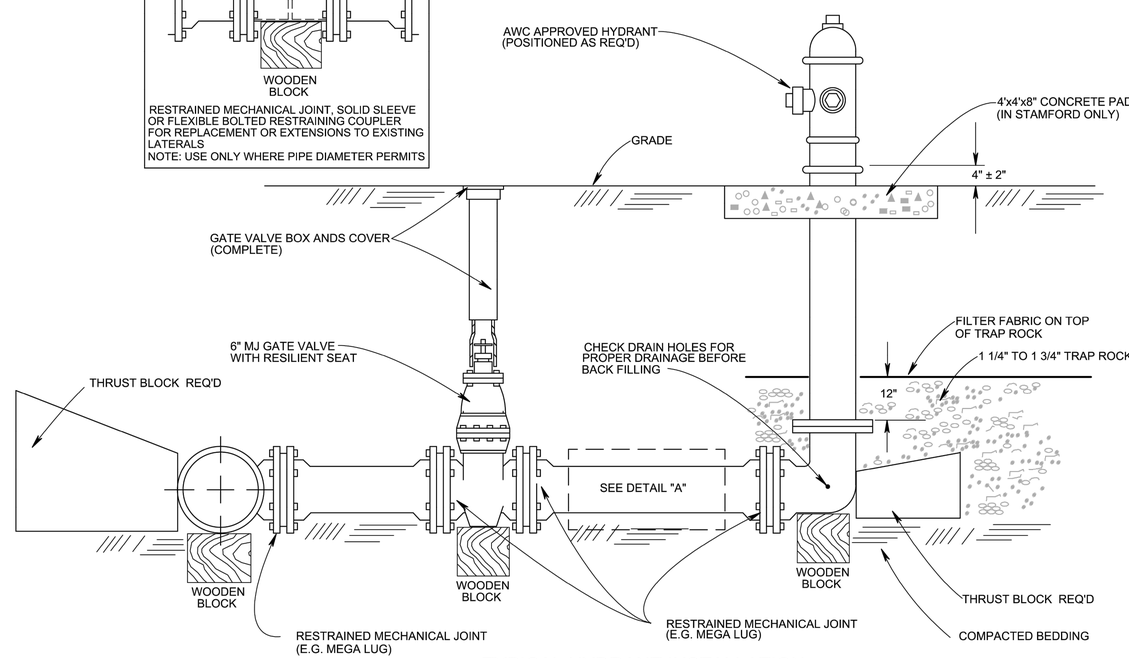

TYPICAL HYDRANT INSTALLATION

NOT TO SCALE

NOT FOR CONSTRUCTION

FUSS & O'NEILL
56 QUARRY ROAD
TRUMBULL, CONNECTICUT 06611
203.374.3748
www.fando.com

0
GRAPHIC SCALE

drawing title:
CONSTRUCTION DETAILS (AQUARION DETAILS)

REVISIONS:

mark	date	description

STATE OF CONNECTICUT
DEPARTMENT OF CONSTRUCTION SERVICES

DRAWING PREPARED BY:
CONSIGLI CONSTRUCTION CO,. INC.
72 SUMNER STREET, MILFORD, MA 01757
508-473-2580 P / 508-473-3588 F

project:
FAIRFIELD REGIONAL FIRE TRAINING CENTER
205 Richard White Way
Fairfield, CT

CAD no.
project no. BI-FP-14 DB

date	11/24/2015
scale	NONE
drawn by	VC
approved by	JEL
drawing no.	CD5.06

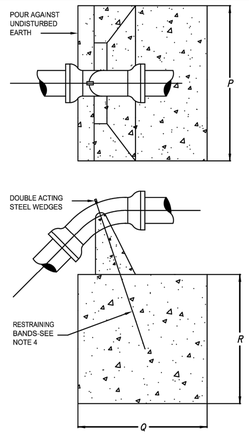

PIPE DIAM. IN	BLOCK DIMENSIONS BEND	P IN.	Q IN	R IN.	CONCRETE VOLUME CU. YD
16	45	72	60	56	52
	22 1/2	60	48	44	27
	11 1/4	60	36	36	14
12	45	60	48	48	3.0
	22 1/2	42	42	40	15
	11 1/4	34	34	34	0.84
10	45	54	42	42	2.0
	22 1/2	36	36	36	1.0
	11 1/4	30	30	30	0.58
8	45	48	36	36	1.3
	22 1/2	32	32	32	0.71
	11 1/4	26	26	26	0.38
6	45	42	30	28	0.76
	22 1/2	26	26	26	0.38
	11 1/4	24	24	24	0.30

NOTES:
1. 2500 psi CONCRETE TO BE USED
2. BLOCK DIMENSIONS ARE BASED UPON SOIL BEARING PRESSURE OF 2000 psi AND WATER PRESSURE OF 150 psi. WHERE SOIL BEARING IS LESS OR WATER PRESSURE IS GREATER, A SPECIAL DESIGN WILL BE REQUIRED.
3. WHERE 90° CREST VERTICAL BEND IS REQUIRED APPROVAL MUST FIRST BE OBTAINED FROM THE ENGINEER. A SPECIAL DESIGN WILL BE REQUIRED.
4. 2-#6 REINFORCING RODS REQUIRED FOR 16" 45° BEND; 1#6 REINFORCING ROD REQUIRED FOR ALL OTHER BENDS. EXPOSED BARS TO BE PROVIDED WITH PROTECTIVE COATING.

NOTE:
IN ADDITION TO THE CONCRETE THRUST BLOCKS, ALL FITTINGS TO BE TIED TOGETHER WITH 3/4" GALVANIZED THREADED RODS, AND ANY OTHER SPECIALS AS DIRECTED BY THE WATER COMPANY.

CREST VERTICAL BENDS
NOT TO SCALE

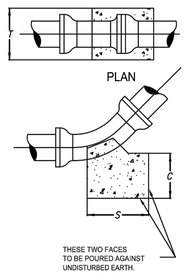

PIPE DIAM. IN	BLOCK DIMENSIONS BEND	S IN.	T IN	U IN.	CONCRETE VOLUME CU. FT.
16	90	48	48	48	640
	45	48	34	20	189
	22 1/2	42	20	18	88
	11 1/4				(3)
12	90	36	36	36	270
	45	36	24	18	90
	22 1/2	28	18	12	35
	11 1/4				(3)
10	90	30	30	30	156
	45	30	20	18	63
	22 1/2	22	16	12	24
	11 1/4				(3)
8	90	24	24	24	80
	45	24	16	12	27
	22 1/2	18	12	12	15
	11 1/4				(3)
6	90	18	18	18	34
	45	18	12	12	15
	22 1/2	12	12	12	10
	11 1/4				(3)

NOTES:
1. 2500 psi CONCRETE TO BE USED
2. BLOCK DIMENSIONS ARE BASED UPON SOIL BEARING PRESSURE OF 2000 psi AND WATER PRESSURE OF 150 psi. WHERE SOIL BEARING IS LESS OR WATER PRESSURE IS GREATER, A SPECIAL DESIGN WILL BE REQUIRED.
3. BEND TO BE SET AGAINST UNDISTURBED EARTH, BACKFILL TO BE FIRMLY TAMPED, OR BLOCK TO BE FURNISHED AS DIRECTED BY THE ENGINEER.

SAG VERTICAL BENDS
NOT TO SCALE

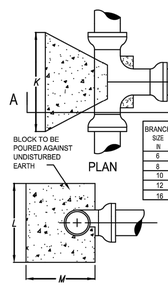

BRANCH SIZE IN	BLOCK DIMENSIONS K IN	L IN	M IN	CONCRETE VOLUME CU. FT.
6	18	16	12	24
8	30	18	12	40
10	42	20	12	63
12	50	24	16	113
16	60	36	24	300

NOTES:
1. 2500 psi CONCRETE TO BE USED
2. BLOCK DIMENSIONS ARE BASED UPON SOIL BEARING PRESSURE OF 2000 psi AND WATER PRESSURE OF 150 psi. WHERE SOIL BEARING IS LESS OR WATER PRESSURE IS GREATER, A SPECIAL DESIGN WILL BE REQUIRED.

TEES
NOT TO SCALE

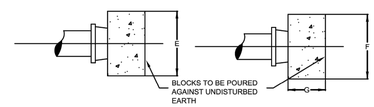

NOTES:
1. 2500 psi CONCRETE TO BE USED
2. BLOCK DIMENSIONS ARE BASED UPON SOIL BEARING PRESSURE OF 2000 psi AND WATER PRESSURE OF 150 psi. WHERE SOIL BEARING IS LESS OR WATER PRESSURE IS GREATER, A SPECIAL DESIGN WILL BE REQUIRED.
3. FOR USE ON ABANDONED LINES AND DEAD ENDS WHERE NO EXTENSION IS CONTEMPLATED.

PIPE DIAM. IN	BLOCK DIMENSIONS E IN	F IN	G IN	CONCRETE VOLUME FT.
6	20	16	12	22
8	28	20	12	39
10	30	24	12	50
12	42	30	14	102
16	52	42	18	227

CAPS, PLUGS AND VALVES
NOT TO SCALE

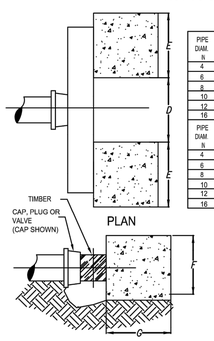

PIPE DIAM. IN	BLOCK DIMENSIONS E IN	F IN	G IN	CONCRETE VOLUME FT.
4	NONE REQUIRED			
6	12	12	12	20
8	16	16	16	46
10	20	20	20	93
12	24	24	24	160
16	32	32	32	380

PIPE DIAM. IN	TIMBER NO. BEAMS	NOM. SIZE	LENGTH IN	CLEARANCE D IN
4	NONE REQUIRED			
6	1	8"x8"	34	18
8	1	8"x8"	42	20
10	1	10"x10"	48	22
12	1	12"x12"	56	24
16	2	10"x10"	72	30

NOTES:
1. 2500 psi CONCRETE TO BE USED
2. BLOCK DIMENSIONS ARE BASED UPON SOIL BEARING PRESSURE OF 2000 psi AND WATER PRESSURE OF 150 psi. WHERE SOIL BEARING IS LESS OR WATER PRESSURE IS GREATER, A SPECIAL DESIGN WILL BE REQUIRED.
3. TIMBER TO BE DOUGLAS FIR CONSTRUCTION GRADE OR BETTER HORIZONTAL SHEAR 120 psi.
4. PROVIDE TAMPED BACKFILL AND/OR BLOCKING TO SUPPORT TIMBER.

DEAD ENDS
NOT TO SCALE

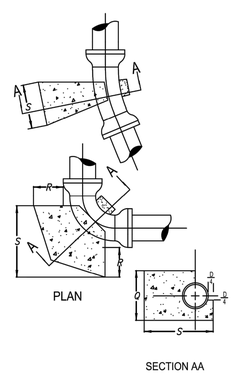

PIPE DIAM. IN	BLOCK DIMENSIONS BEND	S IN.	Q IN	R IN.	CONCRETE VOLUME CU. FT.
16	90	48	48	48	640
	45	48	34	20	189
	22 1/2	42	20	18	88
	11 1/4				(3)
12	90	36	36	36	270
	45	36	24	18	90
	22 1/2	28	18	12	35
	11 1/4				(3)
10	90	30	30	30	156
	45	30	20	18	63
	22 1/2	22	16	12	24
	11 1/4				(3)
8	90	24	24	24	80
	45	24	16	12	27
	22 1/2	18	12	12	15
	11 1/4				(3)
6	90	18	18	18	34
	45	18	12	12	15
	22 1/2	12	12	12	10
	11 1/4				(3)

NOTES:
1. 2500 psi CONCRETE TO BE USED
2. BLOCK DIMENSIONS ARE BASED UPON SOIL BEARING PRESSURE OF 2000 psi AND WATER PRESSURE OF 150 psi. WHERE SOIL BEARING IS LESS OR WATER PRESSURE IS GREATER, A SPECIAL DESIGN WILL BE REQUIRED.

HORIZONTAL BENDS
NOT TO SCALE

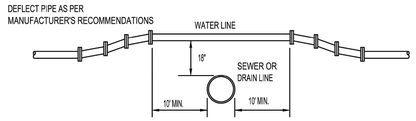

NOTE :
FOR ANY CONDITIONS OTHER THAN SHOWN ABOVE THE FOLLOWING REQUIREMENTS SHALL BE MET. THE JOINTS OF THE SANITARY SEWER OR STORM DRAIN SHALL BE A MINIMUM OF 10' FROM THE POINT OF CROSSING AND THE SANITARY SEWER SHALL BE CLASS 100 PRESSURE PIPE & THE STORM DRAIN SHALL BE DUCTILE IRON.

CROSSING OF WATER LINE OVER SANITARY SEWER OR STORM DRAIN
NOT TO SCALE

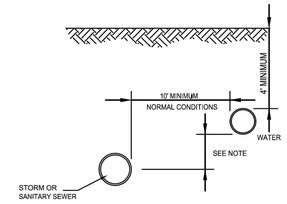

NOTE:
WHERE A 10' HORIZONTAL SEPARATION CANNOT BE OBTAINED DUE TO FIELD CONDITIONS, THE VERTICAL CLEAR DISTANCE SHALL BE A MINIMUM OF 18" HOWEVER, AN EXCEPTION TO THE 10' MINIMUM HORIZONTAL SEPARATION REQUIRES SEPARATE APPROVAL OF THE APPROPRIATE COUNTY HEALTH DEPT.

SEPARATION OF WATER MAINS AND SEWERS - PARALLEL INSTALLATION
NOT TO SCALE

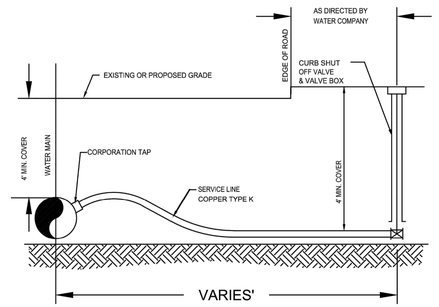

NOTES:
1 CONTRACTOR TO FURNISH AND INSTALL CORPORATION TAP, SERVICE LINE, AND CURB SHUT OFF VALVE AND VALVE BOX.
2 CONTRACTOR TO EXCAVATE, MAINTAIN, BACKFILL, AND RESTORE TRENCH FOR THE TAP, SERVICE LINE, AND CURB SHUT OFF VALVE.
3 CONTRACTOR TO TAKE OUT PERMIT, PAY FEE, AND TO FOLLOW ALL RULES AND REGULATIONS OF THE LOCAL UTILITY AGENCY.

WATER SERVICE LINE LATERAL
NOT TO SCALE

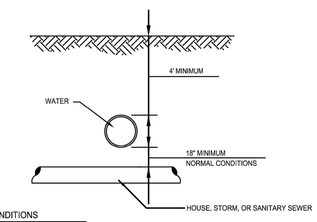

UNUSUAL CONDITIONS
WATER MAINS PASSING UNDER SEWERS SHALL HAVE A VERTICAL CLEARANCE OF 18" MIN. BETWEEN THE SEWER AND WATER MAIN AND THE SEWER SHALL BE SUPPORTED AS DIRECTED BY THE ENGINEER. TO THE EXTENT FEASIBLE, JOINTS IN THE WATER MAIN SHALL BE KEPT AS FAR AS POSSIBLE FROM THE SEWER. WHERE AN 18" SEPARATION CANNOT BE OBTAINED DUE TO FIELD CONDITIONS, SEPARATE APPROVAL OF THE HEALTH DEPARTMENT SHALL BE REQUIRED.

SEPARATION OF WATER MAINS AND SEWER CROSSINGS
NOT TO SCALE

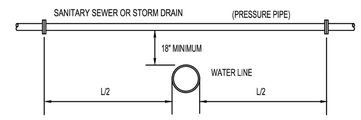

NOTE :
WHERE WATER LINE PASSES BENEATH SEWER LINE OR STORM DRAIN, THE JOINTS OF THE PIPE SHALL BE A MIN. OF 10' FROM THE POINT OF CROSSING AND THE SANITARY SEWER SHALL BE CLASS 100 PRESSURE PIPE & THE STORM DRAIN SHALL BE DUCTILE IRON PIPE.

CROSSING OF WATER LINE UNDER SANITARY SEWER OR STORM DRAIN
NOT TO SCALE

SEWER AND WATER CROSSING NOTES

1. SEWER JOINTS SHALL BE EQUIDISTANT FROM AND LOCATED AS FAR AS POSSIBLE AWAY FROM THE WATER LINE

2. IF THE VERTICAL SEPARATION BETWEEN THE BOTTOM OF THE WATER MAIN AND THE TOP OF THE SEWER IS LESS THAN 18 INCHES (WATER MAIN IS ABOVE SEWER), USE ONE OF THE FOLLOWING PROCEDURES: A) THE WATER MAIN SHALL BE RECONSTRUCTED FOR A DISTANCE OF 10 FEET ON EACH SIDE OF SEWER WITH RUBBER-GASKETED MECHANICAL JOINT PIPE ONE FULL LENGTH WATER MAIN SHOULD BE CENTERED OVER SEWER, B) CONSTRUCT BOTH THE WATER & SEWER PIPE OF RUBBER-GASKETED, CEMENT-LINED DUCTILE IRON PIPE OR EQUIVALENT AND PRESSURE TEST BOTH PIPES, OR C) ENCASE THE SEWER PIPE IN CONCRETE FOR A DISTANCE OF 10 FEET ON EACH SIDE OF THE WATER LINE CROSSING.

NOT FOR CONSTRUCTION

FUSS & O'NEILL
56 QUARRY ROAD
TRUMBULL, CONNECTICUT 06611
203.374.3748
www.fando.com

0
GRAPHIC SCALE

drawing title:
CONSTRUCTION DETAILS (AQUARION DETAILS)

REVISIONS:

mark	date	description

STATE OF CONNECTICUT
DEPARTMENT OF CONSTRUCTION SERVICES

DRAWING PREPARED BY:
CONSIGLI CONSTRUCTION CO., INC.
72 SUMNER STREET, MILFORD, MA 01757
508-473-2580 P / 508-473-3588 F

project:
FAIRFIELD REGIONAL FIRE TRAINING CENTER
205 Richard White Way
Fairfield, CT

CAD no.
project no. BI-FP-14 DB

date	11/24/2015
scale	NONE
drawn by	VC
approved by	JEL
drawing no.	CD5.07

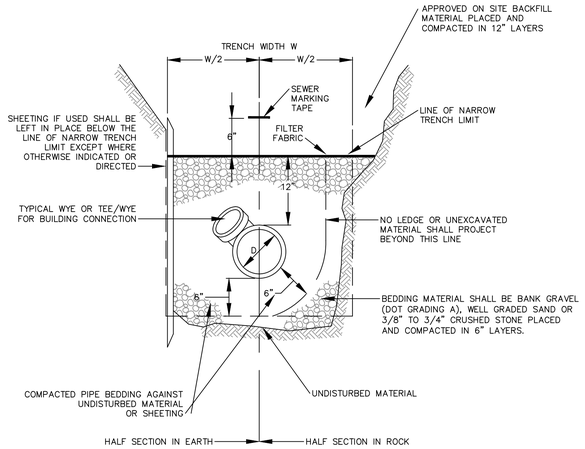

TYPICAL SEWER TRENCH

NOT TO SCALE

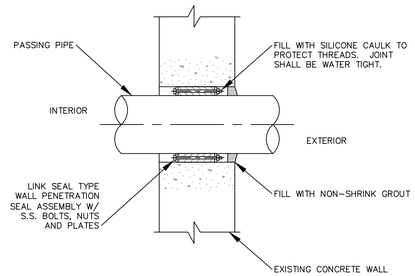

CORE DRILL & LINK SEAL DETAIL

NOT TO SCALE

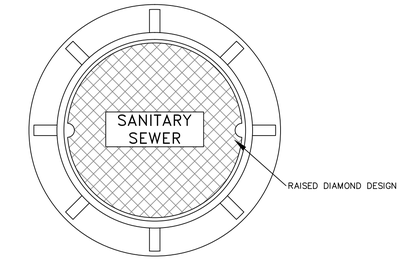

PLAN

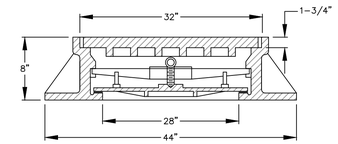

SECTION

WATERTIGHT MANHOLE FRAME AND COVER

NOT TO SCALE

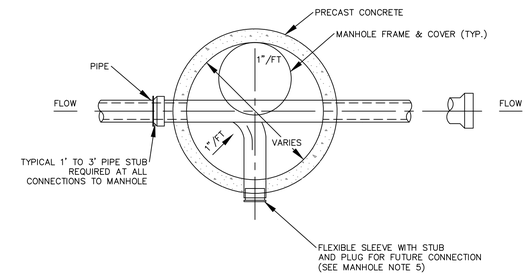

MANHOLE PLAN VIEW

NOT TO SCALE

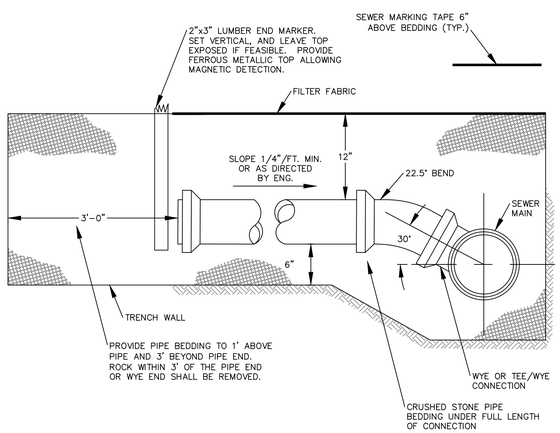

ELEVATION

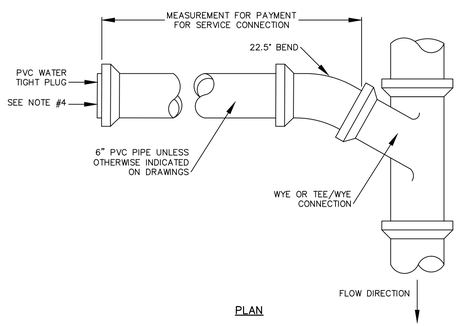

PLAN

SERVICE CONNECTION NOTES

1. NO LEDGE OR UNEXCAVATED MATERIAL SHALL PROJECT WITHIN 6" OF THE PIPE IN ANY DIRECTION
2. EXACT LOCATION AND ELEVATION OF SERVICE CONNECTIONS TO BE DETERMINED AND SET IN THE FIELD DURING CONSTRUCTION
3. EXACT LOCATION OF WYES/TEES, WHERE DIRECTED TO BE INSTALLED, SHALL BE SET IN THE FIELD DURING CONSTRUCTION
4. PROVIDE DI TO PVC TRANSITION COUPLING AT END OF DI SERVICE CONNECTION

SERVICE CONNECTIONS

NOT TO SCALE

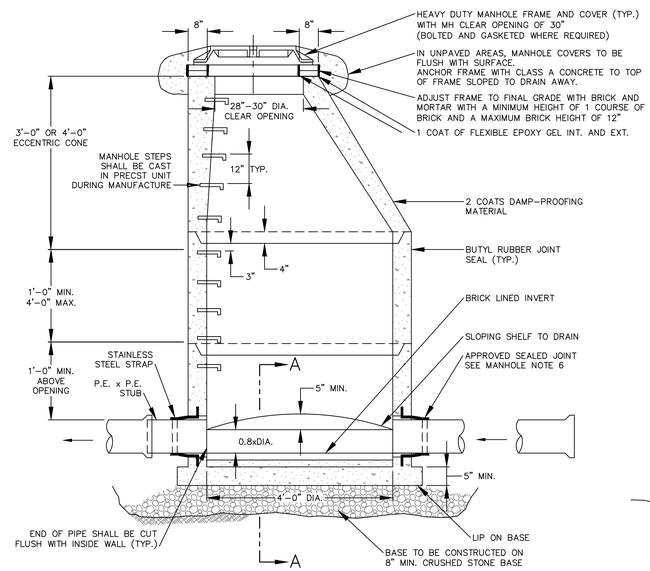

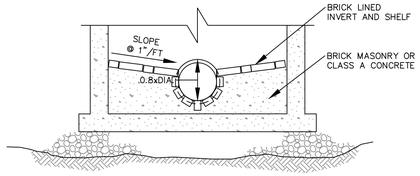

SECTION A–A

4' PRECAST MANHOLE

NOT TO SCALE

NOT FOR CONSTRUCTION

FUSS & O'NEILL
56 QUARRY ROAD
TRUMBULL, CONNECTICUT 06611
203.374.3748
www.fando.com

0
GRAPHIC SCALE

drawing title: CONSTRUCTION DETAILS

REVISIONS:

mark	date	description

STATE OF CONNECTICUT
DEPARTMENT OF CONSTRUCTION SERVICES

DRAWING PREPARED BY:
CONSIGLI CONSTRUCTION CO,. INC.
72 SUMNER STREET, MILFORD, MA 01757
508-473-2580 P / 508-473-3588 F

project:
FAIRFIELD REGIONAL FIRE TRAINING CENTER
205 Richard White Way
Fairfield, CT

CAD no.
project no. BI-FP-14 DB

date	11/24/2015
scale	NONE
drawn by	VC
approved by	JEL
drawing no.	CD5.08

ACCEPTABLE FILL MATERIALS: STORMTECH SC-740 AND SC-310 CHAMBER SYSTEMS

MATERIAL LOCATION	DESCRIPTION	AASHTO M43 DESIGNATION(1)	COMPACTION/DENSITY REQUIREMENT
(D) FILL MATERIAL FOR LAYER D STARTS FROM THE TOP OF THE C LAYER TO THE BOTTOM OF FLEXIBLE PAVEMENT OR UNPAVED FINISH GRADE ABOVE. NOTE THAT PAVEMENT SUB-BASE MAY BE PART OF THIS LAYER.	ANY SOIL/ROCK MATERIALS, NATIVE SOILS, OR PER ENGINEER'S PLANS. CHECK PLANS FOR PAVEMENT SUBGRADE REQUIREMENTS.	N/A	PREPARE PER ENGINEER'S PLANS. PAVED INSTALLATIONS MAY HAVE STRINGENT MATERIAL AND PREPARATION REQUIREMENTS.
(C) FILL MATERIAL FOR LAYER C STARTS FROM THE TOP OF THE EMBEDMENT STONE (B LAYER) TO 18" [457 mm] ABOVE THE TOP OF THE CHAMBER. NOTE THAT PAVEMENT SUB-BASE MAY BE A PART OF THIS LAYER.	GRANULAR WELL-GRADED SOIL/AGGREGATE MIXTURES, < 35% FINES. MOST PAVEMENT SUB-BASE MATERIALS CAN BE USED IN LIEU OF THIS LAYER.	3, 357, 4, 467, 5, 56, 57, 6, 67, 68, 7, 78, 8, 89, 9, 10	BEGIN COMPACTION AFTER 12" [305 mm] OF MATERIAL OVER THE CHAMBERS IS REACHED. COMPACT ADDITIONAL LAYERS IN 6" [152 mm] LIFTS TO A MIN. 95% STANDARD PROCTOR DENSITY (2). ROLLER GROSS VEHICLE WEIGHT NOT TO EXCEED 12,000 lbs [53 kN]. DYNAMIC FORCE NOT TO EXCEED 20,000 lbs [89 kN].
(B) EMBEDMENT STONE SURROUNDING THE CHAMBERS FROM THE FOUNDATION STONE (A LAYER) TO THE C LAYER ABOVE.	CLEAN, CRUSHED, ANGULAR STONE, NOMINAL SIZE DISTRIBUTION BETWEEN 3/4 - 2 INCH [19 - 51 mm]	3, 357, 4, 467, 5, 56, 57	NO COMPACTION REQUIRED.
(A) FOUNDATION STONE BELOW CHAMBERS FROM THE SUBGRADE UP TO THE FOOT (BOTTOM) OF THE CHAMBER.	CLEAN, CRUSHED, ANGULAR STONE, NOMINAL SIZE DISTRIBUTION BETWEEN 3/4 - 2 INCH [19 - 51 mm]	3, 35, 4, 467, 5, 56, 57	PLATE COMPACT OR ROLL TO ACHIEVE A 95% STANDARD PROCTOR DENSITY(2).

PLEASE NOTE:
1. THE LISTED AASHTO DESIGNATIONS ARE FOR GRADATIONS ONLY. THE STONE MUST ALSO BE CLEAN, CRUSHED, ANGULAR. FOR EXAMPLE, A SPECIFICATION FOR #4 STONE WOULD STATE: "CLEAN, CRUSHED, ANGULAR NO. 4 (AASHTO M43) STONE".

2. AS AN ALTERNATE TO PROCTOR TESTING AND FIELD DENSITY MEASUREMENTS ON OPEN GRADED STONE, STORMTECH COMPACTION REQUIREMENTS ARE MET FOR 'A' LOCATION MATERIALS WHEN PLACED AND COMPACTED IN 9" [229 mm] (MAX) LIFTS USING TWO FULL COVERAGES WITH AN APPROPRIATE COMPACTOR.

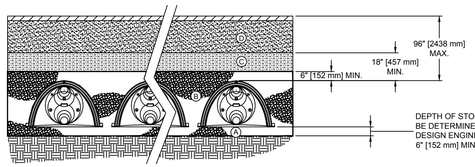

ADS ADVANCED DRAINAGE SYSTEMS, INC.

THE DESIGN ENGINEER SHALL REVIEW THIS DRAWING PRIOR TO CONSTRUCTION. IT IS THE ULTIMATE RESPONSIBILITY OF THE DESIGN ENGINEER TO ENSURE THAT THE PRODUCT(S) DEPICTED AND ALL ASSOCIATED DETAILS MEET ALL APPLICABLE LAWS, REGULATIONS, AND PROJECT REQUIREMENTS.

StormTech Stormwater Management Subsurface Stormwater Management 70 INWOOD ROAD, SUITE 3 | ROCKY HILL, CT 06067 PHONE: 888-892-2694 | FAX: 866-328-8401 WWW.STORMTECH.COM

STORMTECH ACCEPTABLE FILL	
SCALE:	NTS
DATE:	3/30/10
DRAWN BY:	KLJ
CHECKED:	

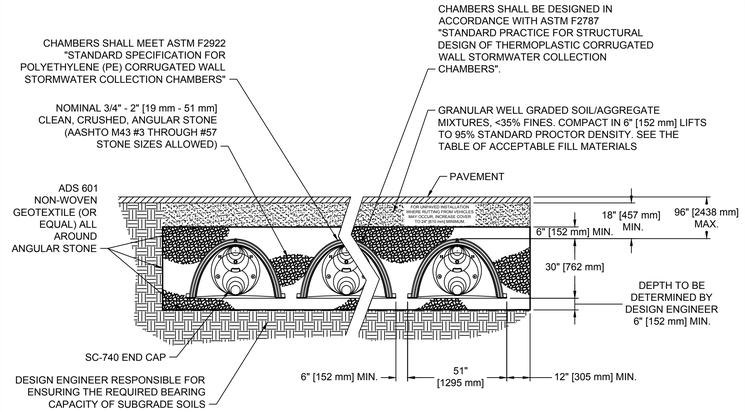

THE INSTALLED CHAMBER SYSTEM SHALL PROVIDE THE LOAD FACTORS SPECIFIED IN THE AASHTO LRFD BRIDGE DESIGN SPECIFICATIONS SECTION 12.12 FOR EARTH AND LIVE LOADS WITH CONSIDERATION FOR IMPACT AND MULTIPLE VEHICLE PRESENCE.

ADS ADVANCED DRAINAGE SYSTEMS, INC.

THE DESIGN ENGINEER SHALL REVIEW THIS DRAWING PRIOR TO CONSTRUCTION. IT IS THE ULTIMATE RESPONSIBILITY OF THE DESIGN ENGINEER TO ENSURE THAT THE PRODUCT(S) DEPICTED AND ALL ASSOCIATED DETAILS MEET ALL APPLICABLE LAWS, REGULATIONS, AND PROJECT REQUIREMENTS.

StormTech Stormwater Management Subsurface Stormwater Management 70 INWOOD ROAD, SUITE 3 | ROCKY HILL, CT 06067 PHONE: 888-892-2694 | FAX: 866-328-8401 WWW.STORMTECH.COM

SC-740 TYPICAL CROSS-SECTION	
SCALE:	NTS
DATE:	08-22-12
DRAWN BY:	JLM
CHECKED:	

NOTES:
1. INSPECTION PORT MUST BE CONNECTED THROUGH KNOCK-OUT LOCATED AT CENTER OF CHAMBER.
2. ALL SCHEDULE 40 FITTINGS TO BE SOLVENT CEMENTED.

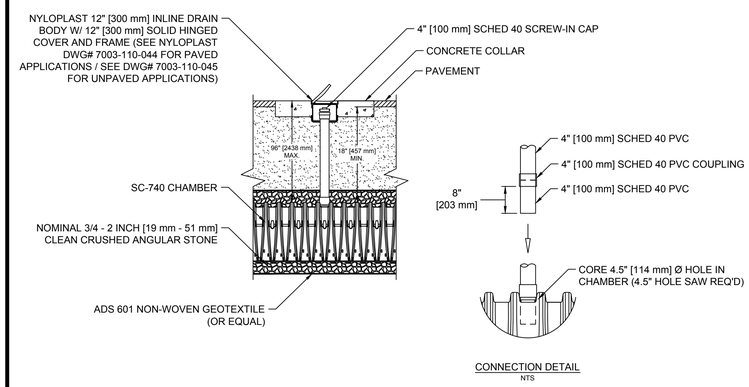

ADS ADVANCED DRAINAGE SYSTEMS, INC.

THE DESIGN ENGINEER SHALL REVIEW THIS DRAWING PRIOR TO CONSTRUCTION. IT IS THE ULTIMATE RESPONSIBILITY OF THE DESIGN ENGINEER TO ENSURE THAT THE PRODUCT(S) DEPICTED AND ALL ASSOCIATED DETAILS MEET ALL APPLICABLE LAWS, REGULATIONS, AND PROJECT REQUIREMENTS.

StormTech Stormwater Management Subsurface Stormwater Management 70 INWOOD ROAD, SUITE 3 | ROCKY HILL, CT 06067 PHONE: 888-892-2694 | FAX: 866-328-8401 WWW.STORMTECH.COM

SC-740 INSPECTION PORT DETAIL	
SCALE:	NTS
DATE:	6/15/11
DRAWN BY:	KLJ
CHECKED:	

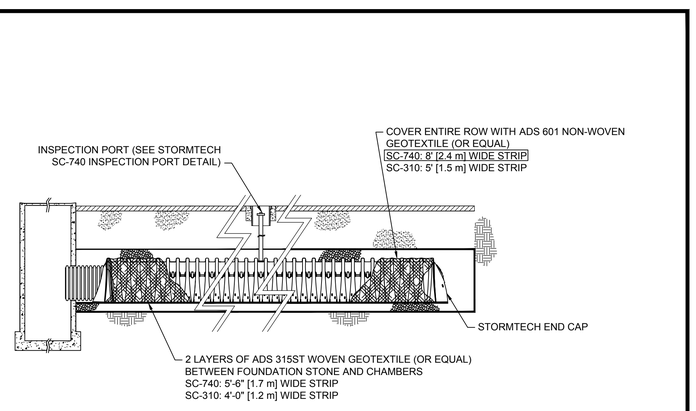

ADS ADVANCED DRAINAGE SYSTEMS, INC.

THE DESIGN ENGINEER SHALL REVIEW THIS DRAWING PRIOR TO CONSTRUCTION. IT IS THE ULTIMATE RESPONSIBILITY OF THE DESIGN ENGINEER TO ENSURE THAT THE PRODUCT(S) DEPICTED AND ALL ASSOCIATED DETAILS MEET ALL APPLICABLE LAWS, REGULATIONS, AND PROJECT REQUIREMENTS.

StormTech Stormwater Management Subsurface Stormwater Management 70 INWOOD ROAD, SUITE 3 | ROCKY HILL, CT 06067 PHONE: 888-892-2694 | FAX: 866-328-8401 WWW.STORMTECH.COM

ISOLATOR ROW PROFILE	
SCALE:	NTS
DATE:	6/15/11
DRAWN BY:	KLJ
CHECKED:	

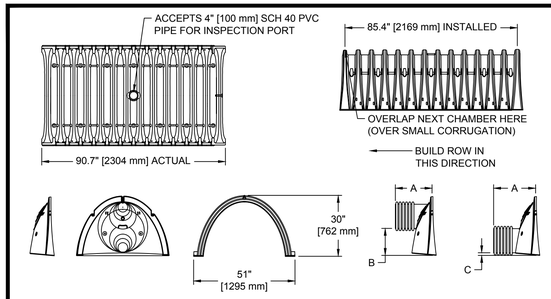

NOMINAL CHAMBER SPECIFICATIONS

SIZE (W x H x INSTALLED LENGTH)	51.0" x 30.0" x 85.4" [1295 mm x 762 mm x 2169 mm]
CHAMBER STORAGE	45.9 CUBIC FEET [1.30 m³]
MINIMUM INSTALLED STORAGE	74.9 CUBIC FEET [2.12 m³]
WEIGHT	75 lbs. [33.6 kg]

STUBS AT BOTTOM OF END CAP FOR PART NUMBERS ENDING WITH "B"
STUBS AT TOP OF END CAP FOR PART NUMBERS ENDING WITH "T"

PART#	STUB	A	B	C
SC740EPE06T	6" [150 mm]	10.90" [277 mm]	18.50" [470 mm]	N/A
SC740EPE06B	6" [150 mm]	10.90" [277 mm]	N/A	0.50" [13 mm]
SC740EPE08T	8" [200 mm]	12.20" [310 mm]	16.50" [419 mm]	N/A
SC740EPE08B	8" [200 mm]	12.20" [310 mm]	N/A	0.60" [15 mm]
SC740EPE10T	10" [250 mm]	13.40" [340 mm]	14.50" [368 mm]	N/A
SC740EPE10B	10" [250 mm]	13.40" [340 mm]	N/A	0.70" [18 mm]
SC740EPE12T	12" [300 mm]	14.70" [373 mm]	12.50" [318 mm]	N/A
SC740EPE12B	12" [300 mm]	14.70" [373 mm]	N/A	1.20" [30 mm]
SC740EPE15T	15" [375 mm]	18.40" [467 mm]	9.00" [229 mm]	N/A
SC740EPE15B	15" [375 mm]	18.40" [467 mm]	N/A	1.30" [33 mm]
SC740EPE18T	18" [450 mm]	19.70" [500 mm]	5.00" [127 mm]	N/A
SC740EPE18B	18" [450 mm]	19.70" [500 mm]	N/A	1.60" [41 mm]
*SC740EPE24B	24" [600 mm]	18.50" [470 mm]	N/A	0.10" [3 mm]

ALL STUBS, EXCEPT FOR THE SC740EPE24B ARE PLACED AT BOTTOM OF END CAP SUCH THAT THE OUTSIDE DIAMETER OF THE STUB IS FLUSH WITH THE BOTTOM OF THE END CAP. FOR ADDITIONAL INFORMATION CONTACT STORMTECH AT 1-888-892-2694.

*FOR THE SC740EPE24B THE 24" [600 mm] STUB LIES BELOW THE BOTTOM OF THE END CAP APPROXIMATELY 1.75" [44 mm]. BACKFILL MATERIAL SHOULD BE REMOVED FROM BELOW THE N-12 STUB SO THAT THE FITTING SITS LEVEL.

NOTE: ALL DIMENSIONS ARE NOMINAL

ADS ADVANCED DRAINAGE SYSTEMS, INC.

THE DESIGN ENGINEER SHALL REVIEW THIS DRAWING PRIOR TO CONSTRUCTION. IT IS THE ULTIMATE RESPONSIBILITY OF THE DESIGN ENGINEER TO ENSURE THAT THE PRODUCT(S) DEPICTED AND ALL ASSOCIATED DETAILS MEET ALL APPLICABLE LAWS, REGULATIONS, AND PROJECT REQUIREMENTS.

StormTech Stormwater Management Subsurface Stormwater Management 70 INWOOD ROAD, SUITE 3 | ROCKY HILL, CT 06067 PHONE: 888-892-2694 | FAX: 866-328-8401 WWW.STORMTECH.COM

SC-740 TECHNICAL SPECIFICATIONS	
SCALE:	NTS
DATE:	3/30/10
DRAWN BY:	KLJ
CHECKED:	

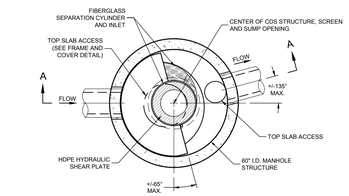

FRAME AND COVER
(DIAMETER VARIES)
N.T.S.

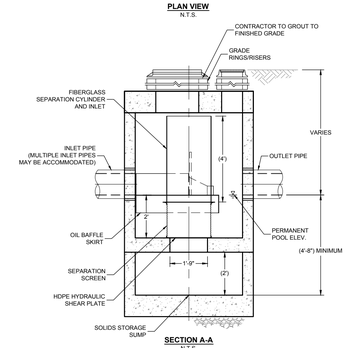

PEAK WATER QUALITY FLOW = 3.2 CFS
PEAK WATER QUALITY VOLUME = 11.110 CF
PEAK 25YR STORM FLOW = 18.5 CFS

NOTE:
GENERAL DETAIL OF HYDRODYNAMIC SEPARATOR.
SIZE AND MODEL AS RECOMMENDED PER REAK FLOW RATES.
PROVIDE SORBENT MATERIAL SYSTEM TO CAPTURE HYDROCARBONS.

HYDRODYNAMIC SEPARATOR
(OR APPROVED EQUAL)
NOT TO SCALE

NOT FOR CONSTRUCTION

FUSS & O'NEILL
56 QUARRY ROAD
TRUMBULL, CONNECTICUT 06611
203.374.3748
www.fando.com

0
GRAPHIC SCALE

drawing title: CONSTRUCTION DETAILS

REVISIONS:

mark	date	description

STATE OF CONNECTICUT
DEPARTMENT OF CONSTRUCTION SERVICES

DRAWING PREPARED BY:
CONSIGLI CONSTRUCTION CO,. INC.
72 SUMNER STREET, MILFORD, MA 01757
508-473-2580 P / 508-473-3588 F

project:
FAIRFIELD REGIONAL FIRE TRAINING CENTER
205 Richard White Way
Fairfield, CT

date	11/24/2015
scale	NONE
drawn by	VC
approved by	JEL
drawing no.	CD5.09
CAD no.	
project no.	BI-FP-14 DB

Appendix D

Stormwater Management Report

Stormwater Management Report

For

Fairfield Regional Fire Training Center

205 Richard White Way
Fairfield, Connecticut

November, 2015

FUSS & O'NEILL

56 Quarry Road
Trumbull, CT 06611

20130828. A10

Table of Contents

Stormwater Management Report
Fairfield Regional Fire Training Center
Fairfield, Connecticut

1 Introduction 1

2 Existing Condition 1
- 2.1 Site of Development 1
- 2.2 Site Characteristics 2
- 2.3 Watershed Areas 2

3 Proposed Conditions 3
- 3.1 Development 3
- 3.2 Watershed Areas 4
- 3.3 Post-Construction Water Quality 4

4 Peak Stormwater Runoff Analysis 5

5 Methods 6

6 Conclusions 7

Figures — End of Report

Figure 1 Site Location Plan
Figure 2 USDA NRCS Soil Survey
Figure 3 FEMA Mapping

Appendices — End of Report

Appendix A Geotechnical Study
Appendix B Stormwater Analysis
Appendix C Water Quality Analysis
Appendix D Hydraulic Analysis
Appendix E Sediment Trap Sizing Calculations

1 Introduction

The Fairfield Regional Fire Training Center is updating their existing facility to provide a higher level of training to local firefighters. In addition to the renovation of the existing training tower, new facilities and training props will be installed in order to achieve a functional training space that is up to date with current standards and demands. A new administration building and burn building will be constructed along with new features such as a new 40,000 gallon drafting tank, vehicle extrication prop, foam/extinguisher training area, stove fire prop, car fire prop, split flange prop, pressure vessel prop, and CDL driver training course. Space will also be reserved to allow for the future construction of a new storage building. New site utilities and other necessary equipment will be provided to allow for the proper use and function of newly constructed features. In addition, a new drainage system will be constructed to collect and manage stormwater.

The Fairfield Regional Fire Training Center, also referred to as the Joseph S. Elias Training Center, is directed by Assistant Chief Christopher Tracy. The site is located at 205 Richard White Way, Fairfield, Connecticut and serves as a training center for 24 local fire departments and approximately 9,000 firefighters per year. A site location map is presented as *Figure 1*.

Fuss & O'Neill prepared this report to evaluate existing hydrologic conditions of the site, and predict the impact the proposed development will have on the receiving tidal wetlands. This report presents design calculations for the peak runoff rate and volume of stormwater leaving the site, and also discusses water quality measures taken to improve the quality of runoff from the developed site.

2 Existing Condition

2.1 Site of Development

The existing study area for this report is approximately 4.4 acres, and encompasses the training facility site and a portion of the neighboring site where stormwater runs-off towards the study area. Existing site features within the study area include the administration building, burn building, training tower, parking lots, driveways and surrounding areas. The study area consists of approximately 2.8 acres of impervious cover and 1.7 acres of permeable cover such as lawn and landscaped areas.

The training facility is accessed from Richard White Way via a bituminous concrete driveway and parking lot for the existing administration building. There is large area of bituminous concrete pavement located between the existing administration building and training tower that extends further to the south and west. This paved area provides access to various storage structures and trailers on site and also accommodates a helicopter landing zone and vehicle travel areas. The existing storm drainage system collects runoff from the site pavement and roof-leaders and discharges it into the existing tidal wetland area located along the southern, southeastern, and southwestern sides of the property. Runoff from the western lawn areas sheets away from the site towards the tidal wetlands along mild to moderate slopes.

For this analysis, we examined the impact of stormwater runoff from the site discharging to the surrounding tidal wetlands Design Point, as described below:

Design Point – Tidal Wetlands: Surrounding the southern and western limits of the site, this area receives discharge from the on-site drainage system which collects runoff from the majority of the site, including paved areas. All other runoff that travels off site due to the existing topography is also assumed to drain to the tidal wetlands. Therefore this Design Point represents the best area available to analyze and compare pre and post development stormwater impacts of the site.

2.2 Site Characteristics

The property soils are characterized by the Natural Resources Conservation Service (NRCS, formerly SCS) as Udorthents and Urban Land. This classification is reserved for excessively drained to moderately well drained soils that have been cut or filled. Based on this classification, the classification of the soils surrounding the site, and information contained in a geotechnical report, Hydrologic Group D soils were modeled for this report. A NRCS Soil Survey of the site is provided as *Figure 2*.

According to the results of the geotechnical report, which is attached as *Appendix A*, the approximate groundwater depth on site is approximately 5 feet below existing grade during the time of the field investigation. Average site grade at the rear of the property is at elevation 9.25 NAVD88 and therefore a groundwater elevation of 4.25 NAVD88 was assumed for this report.

Federal Emergency Management Agency (FEMA) mapping shows that a portion of the existing parcel is within a Special Flood Hazard Area, subject to inundation by the 1% annual flood (i.e., 100-year flood elevation). The proposed administration building has a design finished floor elevation that is 1 foot above the 100 year flood elevation. A FEMA Flood Insurance Rate Map (FIRM) of Fairfield County, Connecticut (Panels 419 of 626 and 438 of 626) is provided as *Figure 3*.

2.3 Watershed Areas

For the existing conditions stormwater analysis, Fuss & O'Neill delineated the existing training center study area into two separate watersheds. These watersheds are illustrated on sheet DR-101 – Watershed Area Map Existing Conditions, found in *Appendix B*.

We analyzed the runoff generated by these two watersheds and the influence of this runoff on the Design Point. A breakdown of the watershed properties is shown below.

EXISTING CONDITIONS

Design Point – Tidal Wetlands

Watershed Name	Area (ac)	CN Value	Tc (min)
EX-1 SITE	3.55	94	5.8
EX- 2 SITE	0.87	88	10.5

3 Proposed Conditions

3.1 Development

This project includes the renovation of the existing training tower and the development of new site features and layout. New construction will include an administration building, burn building, water drafting tank, and various fire training props that will be located on concrete pads. New training props to be implemented into the site design include a vehicle extrication prop, foam/extinguisher training area, car fire prop, stove fire prop, pressure vessel prop, and a split flange prop. New driveways, parking areas, and walkways will be constructed to allow for the effective movement of vehicles and pedestrians throughout the site. A location has also been reserved on-site for the construction of a future storage building. Most of the new construction will occur within areas of the site that have already been developed and have existing pavement cover. However, some of the new development will extend into areas of the site that currently consist of permeable cover. As a result, the site improvements will increase the overall impervious cover of the study area by approximately 0.6 acres.

To compensate for the increased runoff generated from the developed site, an underground infiltration system will be implemented into the design of the new drainage system. This infiltration system will abate the peak flow and volumes of runoff leaving the study area. Stormwater from the majority of the proposed site, north of the training tower and burn buildings, will be collected by surface drains and piped to the infiltration system. This will allow a significant portion of the collected stormwater to permeate into the soils on-site, therefore reducing the amount of stormwater being discharged directly to the receiving tidal wetlands. The infiltration system will consist of SC-740 plastic infiltration chambers manufactured by StormTech, or approved equal, designed in accordance with the Connecticut Stormwater Quality Manual (CTSWQM) guidelines. Due to the system discharging to tidal wetlands, the infiltration system was sized to store 100% of the water quality volume (WQV) of the site, which is the volume generated by 1" of rainfall within the contributing study area. WQV is equivalent to the first inch of rainfall in any storm event that should be captured and treated to remove a majority of the stormwater pollutants on an annual basis, known as the "first flush".

The remaining portion of the site, south of the infiltration system, will runoff into a trench drain and a series of catch basins that will pipe stormwater directly to a stormwater quality unit prior to discharge. Collecting this southern area for storage within the infiltration system was not feasible due to this area's site elevations, ground water elevations, and the proximity to the Coastal Jurisdiction Line (CJL) just south of the site.

A proposed stormwater quality unit will treat all flows from the site drainage system. This includes flows collected by the on-site drainage inlets that discharge to the unit directly, and the excess flow that bypasses the infiltration system once the storage capacity has been reached. The selected unit will be capable of treating the entire water quality flow and volume associated with the first inch of precipitation for each rain event. Treated stormwater will be directed to a new outlet 24" RCP pipe that discharges to the tidal wetlands Design Point at elevation 5.3 NAVD88, above the CJL at elevation 5.2 NAVD88.

A portion of the proposed site to the west will remain as mainly pervious lawn area that will sheet flow directly into the tidal wetlands, in a similar fashion as the existing conditions.

3.2 Watershed Areas

For the proposed conditions stormwater analysis, Fuss & O'Neill delineated the training center study area into four separate watersheds. The watersheds are illustrated on sheet DR-102 – Watershed Area Map Proposed Conditions, found in *Appendix B*. We analyzed the runoff generated by these watersheds and the influence of this runoff on the Design Point. A breakdown of the watershed properties for the Design Point is shown below.

PROPOSED CONDITIONS

Design Point – Tidal Wetlands

Watershed Name	Area (ac)	CN Value	Tc (min)
PR-1 SITE	2.12	96	6.2
PR-1 ADMIN BUILDING	0.37	98	5.0
PR-2 SITE	1.19	96	6.3
PR-3 SITE	0.75	87	13.2

3.3 Post-Construction Water Quality

Detailed erosion and sedimentation controls have been proposed for the site. These measures will protect the wetlands during and after construction until the site is permanently stabilized.

The water quality of stormwater runoff from the developed site will be improved using Best Management Practices (BMP's). Inlet sumps, a hydrodynamic separator, a subsurface infiltration system, and isolator row will be used to achieve a minimum of 80% of Total Suspended Solids removal that may be present in the stormwater runoff. The design meets the requirements of the CTSWQM and the Connecticut and Federal stormwater regulations.

Compensatory water quality volume (WQV) required for the site has been provided within the proposed subsurface infiltration systems. WQV is equivalent to the first inch of rainfall in any storm event that should be captured and treated to remove a majority of the stormwater pollutants on an annual basis. A summary of the water quality volumes for the watershed areas are provided in *Appendix C*. The required water quality volumes were calculated based on section 7.4.1 of the CTSWQM.

Because the system discharges to tidal wetlands, the infiltration system was sized to store 100% of the contributing water quality volume generated by 1" of rainfall. The remaining portion of the site, south of the infiltration system, will be collected and piped to a stormwater quality unit prior to discharge. Collecting this southern area for storage within the infiltration system was not feasible due to this area's site elevations, ground water elevations, and the proximity to the CJL just south of the site.

Runoff from the western portion of the site will sheet flow over pervious lawns, slowing the rate of flow and allowing sediments to settle and stormwater to infiltrate and recharge groundwater prior to reaching the wetlands.

To help these measures to continue to operate adequately over time, the following maintenance procedures should be followed:

Hydrodynamic Separator - The hydrodynamic separator must be inspected at regular intervals and maintained when necessary to ensure optimum performance. At a minimum, inspections should be conducted twice per year; once in the spring and again in the fall. More inspections may be required during winter months where heavy sanding operations may lead to rapid sediment accumulation within the structure. The structure should be cleaned when the level of sediment has reached 75% of capacity in the isolated sump or when appreciable level of hydrocarbons and trash has accumulated. Cleaning operations are typically done using a vacuum truck.

Catch Basin Sumps - Catch basin sumps must be inspected at regular intervals and cleaned when necessary. At a minimum, inspections should be conducted twice per year, once in the spring and again in the fall. More inspections may be required during winter months where heavy sanding operations may lead to rapid sediment accumulation within the structure. Cleaning operations are typically done using a vacuum truck.

Isolator Row – The isolator row for the subsurface infiltration system must be inspected at regular intervals and maintained when necessary to ensure optimum performance. At a minimum, inspections should be conducted twice for the first year and then, annually in subsequent years. More inspections may be required during winter months where heavy sanding operations may lead to rapid sediment accumulation within the structure. If sediment exceeds three inches in depth throughout the length of the row, the row cleaning operations should be performed. Cleaning operations typically involve flushing sediment into the inlet manhole, and using a vacuum truck to remove the sediment from the manhole, and should be performed in accordance with manufacturer's recommendations.

4 Peak Stormwater Runoff Analysis

Results from modeling of pre and post-development stormwater runoff for the Existing and Proposed Watersheds are shown below. Results are summarized for both peak runoff flow rate (cfs) and runoff volume (acre-ft) at the Design Point. These findings are attached to this report as *Appendix B Stormwater Analysis*.

EXISTING vs. PROPOSED STORMWATER RUNOFF RESULTS
Design Point – Tidal Wetlands

Peak Flow Analysis

Storm Frequency (yrs)	Existing Peak Flow Rate (CFS)	Proposed Peak Flow Rate (CFS)	Delta (CFS)
1	9.33	7.90	-1.43
2	11.89	10.96	-0.93
10	19.11	17.90	-1.54
25	22.06	20.74	-1.32
100	28.34	25.58	-2.76

Volume Analysis

Storm Frequency (yrs)	Existing Runoff Volume (AC-FT)	Proposed Runoff Volume(AC-FT)	Delta (AC-FT)
1	0.722	0.424	-0.298
2	0.932	0.581	-0.351
10	1.540	1.053	-0.487
25	1.793	1.256	-0.537
100	2.338	1.708	-0.630

Despite expanding impervious surfaces, the staging of runoff for infiltration will recharge the groundwater and reduce the peak flow rate and volume of overland stormwater runoff to the off-site tidal wetlands. The overall rate of runoff leaving the proposed site will not increase from existing site conditions. Our models predict that receiving watersheds will experience reduced runoff flow rates and volumes for all storms analyzed, up to the 100-year storm event.

5 Methods

The HydroCAD 9.10 computer program was used to perform watershed modeling. The HydroCAD program is based on NRCS TR-20 methods. The methods described in the NRCS TR-55 manual were followed to calculate the curve number and time of concentration input data for this model. The rainfall frequency values for Fairfield County, Connecticut were used to generate the computer model.

All impervious surfaces including roofs and paved areas were assigned a Curve number of 98 and lawn areas were assigned a Curve number of 84. A minimum time of concentration of 5 mins was used for this report. A conservative rate of 1" inch per hour of permeability was applied to the proposed infiltration system.

Hydraulic pipe sizing analysis was conducted using Bently StormCAD V8i. The StormCAD program is based on The Mannings Equation energy methodology. The proposed system is capable of conveying a 10-year storm event without overtopping and ponding. This analysis is attached to this report as *Appendix D,* Hydraulic Analysis.

6 Conclusions

Runoff from the proposed site will discharge into adjacent tidal wetlands. Despite the introduction of additional impervious surfaces, a proposed drainage and stormwater infiltration system will reduce the overall peak runoff rate and volume leaving the site, up to the 100-year storm event.

Post-construction water quality improvement is achieved by the use of BMPs, designed to provide on-site storage for the water quality volume generated on-site and remove 80% of Total Suspended Solids that may be present in runoff leaving the site. The stormwater management design meets the requirements of the Connecticut Stormwater Quality Manual and both Connecticut and federal stormwater regulations.

Based on the results of the foregoing analysis, it is the professional opinion of Fuss & O'Neill that the proposed development will not have adverse impacts on the receiving watersheds.