STORMWATER POLLUTION CONTROL PLAN

Municipal Bulky Waste Disposal Area
Main Street, Newington, Connecticut

May 27, 2015

Prepared for

TOWN OF NEWINGTON
Engineering Department
Highway Department
131 Cedar Street
Newington, Connecticut 06111

Prepared by

LOUREIRO ENGINEERING ASSOCIATES, INC.
100 Northwest Drive
Plainville, Connecticut 06062

An Employee Owned Company

Comm. No. 62NE4.03

TABLE OF CONTENTS

		Page
1.	**INTRODUCTION**	**1-1**
1.1	Existing Conditions	1-1
1.2	Proposed Closure Plan Description	1-2
1.3	Existing and Proposed Drainage Patterns	1-2
1.4	Drainage Analysis Summary and Related Computations	1-3
1.5	Modifications to the Plan	1-3
2.	**DESCRIPTION OF PROPOSED CLOSURE ACTIVITIES**	**2-1**
2.1	Nature and Scope of the Proposed Construction Activities	2-1
2.2	Estimates of Areas to be Disturbed	2-1
2.3	Post Construction Runoff	2-2
2.4	Post Construction Conditions	2-2
2.5	Receiving Waters	2-2
3.	**CONSTRUCTION SEQUENCING AND CONTROL MEASURES**	**3-1**
3.1	Construction Sequencing	3-1
3.2	Site Control Measures	3-2
3.2.1	Disturbed Areas	3-2
3.2.2	Initial Erosion Control Installations	3-2
3.2.3	Landfill Closure Construction and Site Restoration	3-3
3.2.4	Other Specific Site Control Measures and Permit Conditions	3-4
3.3	Routine Maintenance	3-4
4.	**POST CONSTRUCTION STORMWATER MANAGEMENT**	**4-1**
5.	**INSPECTIONS, MONITORING AND RECORD KEEPING**	**5-1**
5.1	Routine Inspections	5-1
5.2	Post-Construction and CT DEEP Inspections	5-3
5.3	Stormwater Monitoring and Reporting Requirements	5-3
5.4	Record Keeping Requirements	5-5
6.	**CERTIFICATIONS**	**6-1**
6.1	Registrant's Certification	6-1
6.2	Professional Engineer's Certification	6-1
6.3	Contractor's Certification	6-1
6.4	Certification of Documents	6-2
7.	**TERMINATION REQUIREMENTS**	**7-1**

FIGURES

Figure 1	USGS Quadrangle Map

DRAWINGS

Drawing E-1	Existing Conditions Map
Drawing C-1	Landfill Closure Plan - Site Plan
Drawing SEC-1	Landfill Closure Plan - Sections
Drawing D-1	Technical Specifications & Construction Details
Drawing D-2	Sedimentation and Erosion Control Notes & Details

APPENDICIES

Appendix A	General Permit for the Discharge of Stormwater and Dewatering Wastewaters from Construction Activities
Appendix B	General Permit Registration Form
Appendix C	Drainage Report
Appendix D	Routine Inspection Log - Report Forms
Appendix E	Stormwater Monitoring Report (SMR) Forms
Appendix F	Executed Certifications
Appendix G	Notice of Termination

ACRONYMS

CT DEEP	Connecticut Department of Energy and Environmental Protection
SWPCP	Stormwater Pollution Control Plan
USGS	United States Geological Survey
General Permit	General Permit for the Discharge of Stormwater and Dewatering Wastewaters from Construction Activities
Guidelines	Connecticut Guidelines for Soil Erosion and Sediment Control

1. INTRODUCTION

Loureiro Engineering Associates, Inc. (Loureiro) was retained by the Town of Newington to prepare this Stormwater Pollution Control Plan (SWPCP) for the proposed closure of its existing municipal bulky waste disposal area located off Main Street in the Town of Newington, just south of Churchill Park, as shown Figure 1- USGS Quadrangle Map.

This SWPCP has been prepared to provide the managerial and operating staff of the Town of Newington's Engineering and Highway Departments with the appropriate information and guidance to ensure that stormwater discharges associated with the proposed landfill closure activities to be conducted at this site are properly managed in compliance with the *General Permit for the Discharge of Stormwater and Dewatering Wastewaters from Construction Activities* (herein referred to as the *General Permit*) that was reissued by the Connecticut Department of Energy and Environmental Protection (CT DEEP) on August 31, 2013. A copy of the *General Permit* containing the specific provisions and conditions applicable to this proposed landfill closure is included in Appendix A. A copy of the *General Permit Registration Form* for the proposed construction activity is also provided for reference in Appendix B.

This SWPCP is essentially designed to minimize stormwater pollution caused by soil erosion and sedimentation during and after the proposed construction activities for the proposed landfill closure and by the subsequent use of the site following the completion of the construction for the proposed leaf composting, brush processing and solid waste transfer station activities.

1.1 Existing Conditions

The Town of Newington has owned and operated the existing municipal bulky waste disposal area since about April of 1975 when the landfill was initially permitted by the former Connecticut Department of Environmental Protection (now known as the CT DEEP). The landfill currently consists of approximately ten acres of land located within a 60.37 acre town-owned parcel of land, much of which is designated as open space and inland-wetlands as shown on Figure 1-USGS Quadrangle Map and on the Existing Conditions Map included as Dwg No.1.

Although the bulky waste landfill was initially permitted for the disposal of non-hazardous wood, brush and land clearing waste generated by the residents of the Town of Newington, the town was subsequently authorized to construct two vertical expansions of the landfill and a minor permit amendment was granted for the establishment of a leaf composting operation to be conducted on top of the existing landfill. In 2003, the town was granted approval to operate the landfill as a drop-site for limited amounts of bulky waste and recycling materials. The town ceased the spreading and disposal of any bulky waste material at the landfill site shortly before or soon after the receipt of the above referenced approval. Most all of the waste materials received at the site are hauled off-site to a regional recycling facility or materials vendor.

1.2 Proposed Closure Plan Description

In December 2010, Loureiro submitted to the CT DEEP a complete set of final design plans and specifications for the formal closure of the bulky waste landfill based on the recommendations provided in a letter of report that was previously submitted to the CT DEEP for approval in February of 2008. The final design plans and specifications for the proposed landfill closure, contained in this document, provides a detailed description of the required construction activities which include covering the entire surface of the landfill with a minimum of two feet of suitable cover material and the installation of two additional separate paved areas for conducting the leaf composting and brush processing activities (including the leaf & brush drop-off areas). The drawings also include cross-sections of the landfill site showing the existing and final contours following the proposed regrading of the landfill surface. A separate drawing was also prepared illustrating the sedimentation and erosion control requirements to be taken by the contractor performing the work. These drawings were revised in 2012 and 2014 and again in 2015 to reflect the design review comments obtained from the CT DEEP as well as Town Engineer to incorporate the recent designation of the wetlands located along the southern and western boundaries of the landfill site performed in the field by a soil scientist on August 14, 2014.

Following further communications and meetings with the CT DEEP, the Town of Newington with assistance from Loureiro, submitted an application in October of 2012 for a *Stewardship Permit* for the formal closure of the existing bulky waste disposal area. The *Stewardship Permit* was eventually issued to the town in June of 2013. The town also received an *Official Notification of Action* from the Newington Conservation Commission in April of 2015. Both documents contain a number of conditions that must be satisfied during and after the landfill closure including the time allowed to complete the closure, a water quality monitoring program and other post-closure maintenance requirements.

1.3 Existing and Proposed Drainage Patterns

The existing bulky waste landfill site is a large earthen mound containing several separate storage areas for a variety of materials including partially decayed leaves and brush and large stockpiles of reclaimed asphalt millings and fill material as shown on Drawing No. 1 - Existing Conditions Map. A single paved access road allows vehicular traffic to enter the site from Main Street at the southeast corner and extends into the site for approximately 400 feet. Wetland soils surround the southern and western perimeter of the site. A public park is located along the northern perimeter which is largely obscured by a stand of trees and brush. The existing site is situated at an elevation about 30 to 40 feet higher than the surrounding land which allows the stormwater runoff from the site to discharge at primarily two locations; one via a drainage swale located in the southeast quadrant, and the other through an unpaved leak-off located at the west end of the site. The remainder of the runoff drains radially from the center of the site over the northern, eastern and southern side slopes of the site via sheet flow discharging mostly into the wetlands west of the site.

Based on the proposed landfill closure plan drawings, the existing landfill will be provided with a minimum of two feet of clean cover material over all the previously disposed bulky waste material. The side slopes along the southern and western perimeter of the site will be regraded to a 3:1 slope. A significant portion of the site will be paved (possibly with the stockpile of the reclaimed asphalt millings) in the areas dedicated for the leaf composting and brush processing areas and other high volume traffic areas. The remaining unpaved landfill surfaces will be provided with a minimum of 4-inches of topsoil and a vegetated cover. Most importantly, a stormwater sedimentation/detention basin will be installed at the southeast portion of the site to provide suitable management of the majority of the stormwater runoff before discharging to the wetlands in a location where a majority of runoff was previously discharged. The areas located along the southern and western portions of the site will be regraded to match the existing grades along the perimeter of the site and will discharge off-site radially, as it currently does, but with less drainage area, causing a decrease in peak runoff flow and runoff volume. The remainder of the site is graded so the stormwater runoff will drain towards the proposed stormwater sediment/detention basin located in the southeast corner of the landfill site.

1.4 Drainage Analysis Summary and Related Computations

Although the rate of stormwater runoff from the landfill site will increase due primarily to the increased paved areas, the installation of the proposed stormwater sediment/detention basin will significantly reduce the peak rates of stormwater runoff from the site for all frequency storms. The proposed sediment/detention basin has been designed to function both as an infiltration basin during minor storms and as an infiltration and a detention basin during large storm events. The basin will also provide ample volume for improving the water quality of the stormwater discharge both during and after the construction activities are completed.

The *Drainage Report* recently updated by Loureiro in 2015 is included in Appendix C and provides a more detailed description of the existing and future drainage patterns as well as the existing and projected peak flow rates based on the calculations of the estimated run-off coefficients used in the analysis.

1.5 Modifications to the Plan

Under sub-section 5(b)(5) of the *General Permit*, the town is responsible for keeping the SWPCP up-to-date at all times and is required to modify the plan under the following conditions:

- When the actions required by the plan fail to prevent stormwater pollution;
- when there is a change in the listed contractors or sub-contractors; or
- when there is a change in design, construction, operation, or maintenance at the site which has potential for the discharge of pollutants to the waters of the state and which has not otherwise been addressed in the plan.

In the event the town is notified by the CT DEEP that the plan and/or site is not in compliance with the permit requirements, the SWPCP must be modified within the periods of time stated in the above referenced sub-section.

2. DESCRIPTION OF PROPOSED CLOSURE ACTIVITIES

The following is a brief description of the proposed closure activities to be implemented at the landfill site within the next three years by the town work forces as well as one or more private contractors to be retained by the town to perform certain portions of the work as deemed appropriate and economically feasible by the Town Engineer and Highway Superintendent. The proposed site conditions and construction requirements are depicted on the proposed landfill closure plan drawings and specifications contained in this document.

2.1 Nature and Scope of the Proposed Construction Activities

Based on the enclosed detailed design drawings prepared for the proposed closure of this landfill, the following basic construction activities are anticipated to be performed in the general sequence noted below:

- Installation of all erosion control barriers and anti-tracking pad.
- Clearing, grubbing and removal and/or regrading of all existing stockpiles of bulky waste items including trees, logs, partially decayed leaf & brush piles and other debris as required for construction.
- Construction of the proposed stormwater sediment/detention basin and associated catch basins, storm drain piping, infiltration trenches, rip-rap outlets and related structures.
- Regrading of the entire landfill site to direct the majority of the surface runoff into the proposed sediment/detention basin.
- Placing and compaction of a minimum of two feet of suitable cover material over the entire landfill surface in accordance with the CT DEEP cover requirements by using the excess material available on-site.
- Construction of all new processed gravel and paved access roadways and access ramps.
- Construction of new asphalt pads for leaf composting and brush drop-off & processing areas.
- Seeding and mulching of all areas disturbed by the construction that are not part of the access roadways or leaf composting and brush drop-off & processing areas.
- Restoration of all other areas affected by the construction.
- Other miscellaneous site work including the installation of additional monitoring wells, etc.

2.2 Estimates of Areas to be Disturbed

It is anticipated that nearly the entire landfill site will be disturbed by the construction activities involving approximately 10.25 acres of which only 0.084 acres are designated wetlands.

2.3 Post Construction Runoff

Following the completion of the closure activities, the stormwater runoff from the majority of the landfill site will be directed to the proposed stormwater sediment/detention basin located near the eastern boundary of the property including the stormwater run-off derived from the paved leaf composting and brush drop-off & processing areas as well as the adjoining unpaved areas that will be regraded to discharge to the catch basins that lead to the sediment/detention basin. The stormwater run-off derived from the remainder of the site will discharge via sheet flow to the regraded and vegetated side slopes located along the western and southern perimeter of the site as depicted by the flow arrows on Drawing C-1. Overall, the peak stormwater flows discharged from the proposed sediment/detention basin are estimated to be reduced significantly from the current run-off rates during a 2-year, 10-year, 25-year, 50-year and a 100-year storm event as indicated in the summary table on page 3-1 of the Drainage Report prepared by Loureiro included in Appendix C.

2.4 Post Construction Conditions

The proposed post construction conditions that will exist following the implementation of the landfill closure construction activities contemplated under this document are shown on Drawings C-1, SEC-1, D-1 and D-2 and as described in greater detail in the following section of this report. The above referenced drawings meet the intent and requirements of mapping required under the *General Permit* which depict the post construction conditions at the site.

2.5 Receiving Waters

Under both the existing and post-construction conditions, the stormwater runoff generated from this site flows in a generally northerly direction into the existing wetlands immediately adjacent to the site which empties into School House Brook that crosses under New Britain Avenue which flows into Mill Brook located in the Town of Newington which eventually connects to Piper Brook and the South Branch of the Park River located primarily in the Town of West Hartford before discharging to the Connecticut River located near the intersection of the Whitehead Highway and Interstate I-91 in the City of Hartford. The receiving waters and drainage areas were obtained from the CT DEEP Environmental Conditions Online web site (DEEP ECO) depicting the individual streams and watershed areas associated with this site.

3. CONSTRUCTION SEQUENCING AND CONTROL MEASURES

The nature and scope of the construction activities for the proposed closure of the Town of Newington municipal bulky waste disposal area are described above in Section 2.1 and are presented on the detailed design drawings provided in this document. It is expected that the construction work required to complete the landfill closure will be performed both by town forces and private contractors within the next three year period following receipt of all the necessary permits and approvals for construction. Since the town recently received state grant funds from the Office of Policy & Management administered through the CT DEEP, much of the work will likely be performed by a private contractor or contractors to help reduce the time frame.

3.1 Construction Sequencing

Based on recent conversations with the Town Engineer and the Highway Superintendent, it is expected that the majority of the initial work required to install the necessary erosion control barriers, sediment/detention basin and related structures; the clearing, grubbing and removal of all existing stockpiles of bulky waste items; and the required regrading and possibly partial placement and compaction of the final landfill cover material is expected to be awarded to one or more private contractors in 2015 with much of the landfill regrading and final cover work being conducted in 2016. The construction of all the new processed gravel and paved access roadways and access ramps; the new asphalt pads for leaf composting and brush drop-off & processing areas; and the final loam, seeding and mulching of all areas disturbed by the construction that are not part of the access roadways or leaf composting and brush drop-off & processing areas will most likely be performed by town forces in 2017 and are expected to be completed by June of 2018. At this point in time the exact scope and sequence of the construction activities are yet to be determined depending on the availability of the state and local funds and the estimated costs for each phase of the construction work.

A primary objective of this SWPCP is to provide the necessary guidance to be followed by both the private contractors and the town forces in the implementation of each of the basic elements of the above referenced detailed design documents into a single cohesive plan to be used by each of the various contractors and town forces during the construction activities at the landfill site.

A crucial part of this SWPCP is the work related to the control and management of the stormwater discharges generated from the landfill site as a result of both the construction and post-construction activities. In general, the town must ensure that the private contractors will be provided with adequate copies of the final design documents, the required permits and approvals along with the stated conditions which may contain any limitations or restrictions on how the work is to be performed. The private contractors and town forces involved in the construction and post-construction activities will be responsible to independently and properly review each of the detailed design documents, permits and approvals and address each of the stated conditions for performing the work.

In addition, the appropriate representatives of the town and the private contractors are expected to provide continuous supervision of their respective work to ensure that the work is performed in compliance with the detailed design documents, required permits and approvals as well as the various provisions stated in this SWPCP.

3.2 Site Control Measures

While it is the responsibility of the town and each contractor to perform their duties related to the discharge of stormwater and dewatering wastewaters in accordance with the applicable terms and conditions of Section 5(b)(2) of the *General Permit*, each should take particular notice of the provisions to be taken related to the following specific requirements:

3.2.1 Disturbed Areas

- All erosion control and sediment barriers must be maintained until final stabilization of those portions of the site located upgradient of the perimeter controls has been established.

- Where construction activities have permanently ceased or have temporarily been suspended for more than seven days, or when final grades are reached in any portion of the site, stabilization practices shall be implemented within three days.

- Areas that will remain disturbed but inactive for at least thirty days shall receive temporary seeding in accordance with the current State of Connecticut Guidelines for Soil Erosion and Sediment Control (*Guidelines*).

- Areas that will remain disturbed beyond the planting season, shall receive long-term, non-vegetative stabilization sufficient to protect the site through the winter.

- In all cases, the final landfill cover must be stabilized as soon as possible following placement of the final cover in accordance with the detailed plans and specifications.

3.2.2 Initial Erosion Control Installations

- An anti-tracking pad is required to be installed at the landfill entrance in accordance with Drawing C-1 and the detail shown on Drawing D-2. The anti-tracking pad is intended to ensure that all vehicles that leave the construction area do not track soils onto the public roadway at any time.

- All erosion control and sediment barriers are required to be installed as shown on Drawing C-1 and detailed on Drawing D-2. Additional barriers may be needed to mitigate soil erosion and to control sedimentation as required by the actual field conditions or as may

be deemed necessary by the town or his authorized field representative. Any additional erosion control measures shall be designed and installed in accordance with the latest edition of the *Connecticut Guidelines for Soil Erosion and Sediment Control*.

- The construction of the proposed sediment/detention basin, together with the associated catch basins, infiltration trenches and related storm sewer piping, must be constructed as shown on Drawing C-1 and as detailed on Drawing D-2 to direct the majority of the surface run-off into the basin. Before the sediment/detention basin and associated catch basins, infiltration trenches and interconnected piping are constructed; all of the proposed erosion control and sediment barriers shall be installed along the perimeter of the site as well as around the new catch basins and existing drainage swales and ditches.

3.2.3 Landfill Closure Construction and Site Restoration

In general, the enclosed detailed final design plans and specifications describe the materials, equipment and labor necessary to construct the facilities required for the proper closure of the former bulky waste disposal site and include the sedimentation and erosion control measures required to comply with the permit obtained from the local Conservation Commission.

Although much of the existing landfill site is currently an exposed gravel and clay soil surface, a minimal amount of clearing and grubbing will be required to gain access to perform the planned improvements. In addition, selected stockpiles of decayed leaves, tree branches and wood chips will be required to be removed and/or disposed of either off-site or on-site as part of the regrading activity. It is expected that the clearing activities will be performed immediately prior to the disturbance of a given area. As such, the complete clearing and grubbing of the site may not be performed in a single event.

As the development of the site progresses, temporary and final restoration activities will need to occur. The site restoration activities will consist of the construction of new processed aggregate roadways, paved areas for the new leaf composting and brush drop-off & processing areas, the placement of a minimum of 4-inches of top soil over the remaining areas disturbed by the construction that are not transformed into roadways or pads, and the seeding and mulching of the lawn areas to establish a stabilized surface to further minimize stormwater pollution.

All soil erosion and sediment control barriers must be maintained throughout the construction period as described above and will not be removed until such a time as all the disturbed areas are paved or a suitable vegetative cover has been established. The sediment/detention basin and associated catch basins, infiltration trenches and connected piping must also be maintained throughout the construction period and shall remain in-tact following the construction to serve as a stormwater detention facility to significantly reduce the peak flows from future storm events and shall be maintained in accordance with the provisions of this plan and the local permits and approvals obtained from the Town of Newington.

3.2.4 Other Specific Site Control Measures and Permit Conditions

In addition to the soil erosion and sedimentation control measures stipulated in Section 5(b)(2) of the *General Permit*, the town forces and contractors retained to perform the work required for the proper closure of this landfill shall also comply with the applicable provisions of the permits and approvals obtained by the Town of Newington from the CT DEEP, the CT DOT and the local boards and commissions including the Newington Conservation Commission.

3.3 **Routine Maintenance**

Routine maintenance of the recommended soil erosion and sedimentation controls will be necessary both during and after the construction period to help mitigate the potential for stormwater pollution. The following minimum maintenance activities shall be performed as needed to keep the soil erosion and sedimentation facilities in proper operation.

- All rip-rap and stormwater discharge swales and aprons shall be inspected and cleared of all excess sediment deposits and invasive plant species on at least an annual basis between May 1 and before September 15.

- All drainage swales shall be inspected at least twice each year and after significant rainfall events and cleared of any excess sediment deposits, invasive plant species and debris. Any soil erosion shall be repaired soon after it is discovered.

- The sediment/detention basin shall be inspected at least two times a year and after significant rainfall events. All excessive sediment deposits, invasive plant species and debris shall be removed and properly disposed of. Any additional repairs or maintenance required beyond routine cleaning shall also be performed based upon the inspections.

- All the erosion control barriers located around the perimeter of the site and critical catch basins and drainage swales shall be inspected at least twice each year and after a significant rainfall event. Any noticeable soil erosion, rills or channeling shall be repaired immediately. All excess sediment deposits, trash and debris shall be removed and disposed of in an acceptable manner. Replacement may be required if found in disrepair.

- The site entrance anti-tracking pad shall be inspected at least two times a year and after significant rainfall events. All excessive sediment deposits, invasive plant species and debris shall be removed and properly disposed of.

- All landscaped lawn and unpaved areas shall be inspected at least two times a year and after significant rainfall events. All excessive sediment deposits, invasive plant species and debris shall be removed and properly disposed of. Other areas disturbed by construction shall be seeded and stabilized as noted above for disturbed areas.

4. POST CONSTRUCTION STORMWATER MANAGEMENT

Post-construction stormwater management must be performed in a manner consistent with the requirements of Section 5(b)(2)(C) of the *General Permit* which are intended to minimize the pollutants in stormwater discharges that will occur after the landfill closure construction activities are completed. As mentioned above, the primary element to be retained and maintained after the construction is complete is the proposed sediment/detention basin and associated catch basins, infiltration trenches and connected piping. This structure will not only significantly reduce the peak flows derived from future storm events, it will also help improve the quality of the stormwater discharge by removing excess suspended solids and floatables along with other possible pollutants such as nutrients and heavy metals contained in the discharges of the stormwater run-off derived from major portions of the site.

Another important post-construction control element to be retained following completion of the construction activities is the rip-rapped channel located at the outlet of the 24-inch pipe receiving the discharge from the sediment/detention basin. It is designed to dissipate the velocity of the stormwater discharge from the outlet pipe to prevent the erosive potential of the discharge during high peak flows which in-turn will maintain and protect the natural physical and biological character of the receiving waters or wetlands.

In addition, Section 5(b)(2)(D) of the *General Permit* describes other stormwater controls that should be implemented to help further prevent stormwater pollutants from entering the receiving waters. These include the following best management practices:

- Proper waste disposal to minimize the discharge of litter, debris, unwanted building materials, hardened concrete or asphalt waste products, or similar waste materials.

- The elimination and/or control of washout areas used for cleaning containers, vehicles or equipment containing paint, asphalt or other waste materials. No such materials shall be dumped into the storm sewers or receiving waters.

- Off-site vehicle tracking of sediments and/or dust shall be controlled by the use of proper dust suppression methods allowed by the current state statutes and regulations.

- The proper cleaning and removal of excess sediment from the sediment/detention basin and associated catch basins, infiltration trenches and connected piping.

- The proper handling and containment of containers of chemicals and petroleum products stored on-site in accordance with the provisions of the *General Permit* as well as the requirements for handling and temporary storage of similar waste or recycle products in accordance with the current drop-off site permit and the pending new *General Permit for a Municipal Solid Waste Transfer Station.*

5. INSPECTIONS, MONITORING AND RECORD KEEPING

This section of the SWPCP contains a summary of the required inspections to be performed during and following construction and until a *Notice of Termination* is submitted to the town by the CT DEEP. This section also describes the inspection logs/report forms and procedures that are required to be prepared to comply with the various *General Permit* requirements. It should be noted that the town and the site contractors retained by the town will be held responsible for the maintenance and integrity of all soil erosion and sediment controls during and after the construction activities are completed.

5.1 Routine Inspections

All inspections of the site must be performed in a manner consistent with the requirements of Section 5(b)(4)(A) and (B) of the *General Permit* which shall include (1) an initial inspection to be conducted within the first 90 days of the start of construction to ensure that the SWPCP is in compliance with the *General Permit* and that all the initial site control measures have been properly implemented and (2) follow-up routine inspections that will confirm that the site control measures comply with the requirements of the SWPCP until a *Notice of Termination* is submitted to the town by the CT DEEP.

The personnel to conduct the above inspections must be qualified by the CT DEEP as someone who is <u>not</u> an employee of the town or registrant, and has no ownership interest of any kind in the project. In addition, the 'qualified' inspector shall be an individual possessing either (1) a professional license or certification by a professional organization recognized by the commissioner related to agronomy, civil engineering, landscape architecture, soil science, and two years of demonstrable and focused experience in erosion and sediment control plan reading, installation, inspection and/or report writing for residential and commercial construction projects in accordance with the *Guidelines*; or (2) five years of demonstrable and focused experience in erosion and sediment control plan reading, installation, inspection and/or report writing for residential and commercial construction projects in accordance with the Guidelines; or (3) certification by the Connecticut Department of Transportation (DOT). The inspector may be the same person that provided the Plan Review Certification required under Section 5(b)(11) of the *General Permit*.

The routine inspections must be conducted at least <u>once per week</u> and <u>within 24-hours of the end of a storm event that generates a discharge</u>. For storms that end on a weekend, holiday or other time after which normal working hours will not commence within 24 hours, an inspection is required within 24 hours only for storms equal to or greater than 0.5 inches. For storms less than 0.5 inches, an inspection shall occur immediately upon the start of the subsequent normal working hours.

Where the site has been temporarily or finally stabilized, such inspections shall be conducted at least once every month for three months. The town shall also provide a suitable rain gauge at or in close proximity of the site to document the rainfall amounts. In general, the qualified inspector shall inspect, at a minimum, the following items:

- Disturbed areas of the construction activity that have not been finally stabilized,
- all erosion and sedimentation controls,
- all structural control measures,
- all soil stockpile areas, and
- all washout areas and locations where vehicles enter or exit the site.

These areas shall be inspected for evidence of, or the potential for, pollutants entering the drainage system and impacts to the receiving waters. Locations where vehicles enter or exit the site shall be inspected for evidence of off- site sediment tracking.

A written report summarizing the scope and results of each inspection shall be prepared and retained by the town as part of this SWPCP. A blank routine inspection log is provided in Appendix D for the use of the inspector. It contains the name and title of the person conducting the inspection, the date of the inspection, the weather conditions including the amount of rainfall observed on the rainfall gauge, major observations relating to the erosion and sedimentation controls and the implementation of this plan, a description of the stormwater discharge(s) from the site, the results of any water quality monitoring conducted at the time of the inspection, and any recommended actions to be taken by the town or the contractor to improve the site conditions. A statement at the bottom of the form is provided to indicate if the site is either in compliance or out of compliance with the terms and conditions of the SWPCP.

The inspection log/report shall be signed by both the inspector and an authorized representative of the town in accordance with the requirements of "Certification of Documents" per Section 5(i) of the *General Permit* and shall be made and retained as part of the SWPCP for at least three years after the date of inspection.

Based on the results of the routine inspections, and if the site is considered out of compliance with the SWPCP, all non-engineered corrective actions as defined in the *Guidelines* shall be implemented on-site within 24 hours and incorporated into a revised SWPCP within three calendar days following the inspection. All engineered corrective actions (as defined in the above referenced *Guidelines*) shall be implemented on-site within seven days and incorporated into a revised SWPCP within ten calendar days following the inspection, unless otherwise specified in the *Guidelines* or approved by the Commissioner of the CT DEEP. During the

period when corrective actions are being developed and have not yet been fully implemented, interim measures shall be implemented to minimize the potential for the discharge of pollutants from the site.

5.2 Post-Construction and CT DEEP Inspections

Once all post-construction stormwater measures have been installed in accordance with the final design plans and have been cleaned of any construction sediment or debris, the town shall contact an independent, third party, qualified soil erosion and sediment control professional and/or a qualified professional engineer, as appropriate, who will inspect the site to confirm compliance with the post-construction stormwater measures. This final stabilization inspection shall be conducted once the site has been stabilized for at least three months. The qualified inspector must indicate that final stabilization has been achieved and that the site is in full compliance with this requirement stated on the *Notice of Termination* form.

Qualified personnel from the CT DEEP may also inspect the site for compliance with the *General Permit* at any time during construction or upon completion of the construction activities in order to verify that the site has been finally stabilized and/or the installation of the post-construction stormwater management measures are in place.

5.3 Stormwater Monitoring and Reporting Requirements

The stormwater monitoring requirements for the project site are stipulated in Section 5(c) of the *General Permit* and include a detailed description of the monitoring parameters and frequency, the personnel required to conduct the monitoring, the methodology involved for the turbidity measurements, the required reports to be submitted to the CT DEEP, etc. The following is a brief summary of the sampling requirements for this particular project site:

- Samples of the stormwater discharge generated from the sediment/detention basin at the outfall of the 24-inch pipe into the wetlands shall be conducted once each month when there is a discharge of stormwater from the basin when construction activities are in progress. No sample is required if there is no stormwater discharge during the month.

- Samples are only required to be taken during normal working hours and may be suspended if unsafe conditions exist (i.e., high winds, lightning, intense rainfall, etc.).

- All samples shall be collected from discharges resulting from a storm event lasting at least 24 hours after any previous storm event that generates a discharge.

- The samples shall be grab samples collected at least three separate times during the storm event and shall be representative of the flow and characteristics of the discharge. The

grab samples may be taken manually or automatically with an in-situ turbidity probe or other automatic sampling device.

- All sampling points shall be identified and clearly marked in the field with a flag, stake or other visible marker.

- Each grab sample shall be analyzed for Turbidity as prescribed by 40 CFR Part 136 and shall be averaged to obtain the reportable value.

If the defined sampling point does not manifest into a discharge, sampling cannot be performed and the field conditions shall be recorded indicating such condition. It is noteworthy that discharge from the proposed detention/sediment basins on this site is not anticipated during normal rainfall events; however, it should be expected during significant storm events. Sampling would only be required if a surface water discharge from the detention/sediment basin occurs.

The specific equipment to be used for obtaining the field measurement of Turbidity can be a portable turbidimeter such as those manufactured by Hach, Orion or Cole Parmer. The turbidimeter measures turbidity as nephelometric turbidity units (NTU). All field meters must be calibrated prior to use by using the 20 NTU, 100 NTU, and 800 NTU standards (in that order).

The monthly grab samples may be collected using any clean container by direct submersion of the sample container into the flow whenever possible. After the sample is collected, it may be transferred as soon as possible into the small glass container provided with the portable turbidimeter for obtaining the turbidity measurement. During this process, care must be taken to avoid settling of any material that is suspended in the sample. Settling can be prevented by swirling the sample. Although the general technology behind the various turbidimeters is similar, different manufacturers will vary their equipment and operations. As such, the manufacturer's operation and maintenance manual should be reviewed and utilized as the basis for proper care and operation of the portable meter. Familiarity with the meter should be initiated before a critical compliance sampling event is underway.

Within 30 days following the end of each month , the town shall submit the stormwater sampling results on the Stormwater Monitoring Report (SMR) form available from the CT DEEP (refer to Appendix E) to the CT DEEP either in hard copy form or electronically by using the NetDMR web site. If the SMR form is submitted electronically using the NetDMR connection, the SMR form shall be filed in accordance with the NetDMR subscriber agreement prescribed in Section 5(c)(2)(F)(i) of the *General Permit*.

If there was no discharge during any given monitoring period, the town must still submit the form to the CT DEEP as required with the words "no discharge" entered in place of the monitoring results. If any discharge is monitored more frequently than required by the *General Permit*, the results of the additional monitoring shall be included in additional SMR forms for the

month in which the samples were collected. If sampling protocols are modified due to the limitations of normal working hours or unsafe conditions, a description of and reason for the modifications shall be included with the SMR.

Submittal of NetDMR Subscriber Agreement

The town and/or the person authorized to sign the SMR forms ("Signatory Authority") shall contact the CT DEEP at deep.netdmr@ct.gov and initiate the NetDMR subscription process for electronic submission of the SMR information. On or before ninety (90) days after issuance of this permit the town must submit a signed and notarized copy of the *Connecticut DEEP NetDMR Subscriber Agreement* to the Department.

Upon learning of a violation of a condition of this General Permit, the town and/or the contractor retained by the town shall immediately take all reasonable action to determine the cause of such violation, correct and mitigate the results of such violation, prevent further such violation, and report in writing such violation and such corrective action to the Commissioner of the CT DEEP within five days of the town learning of such violation. Such information shall be filed in accordance with the certification requirements prescribed in Section 5(i) of the *General Permit.*

5.4 Record Keeping Requirements

In accordance with Section 5(d) of the *General Permit*, the town shall retain copies of this SWPCP, all reports required by the *General Permit*, and records of all data used to complete the registration for this permit for a period of five years, unless the Commissioner of the CT DEEP specifies another time period in writing. All inspection logs/reports must be retained as a part of the SWPCP must be retained for a period of five years following the date of each inspection.

In addition, the town shall retain an up-dated copy of the SWPCP required by the *General Permit*, at the construction site from the start of construction until the construction at the site is completed.

6. CERTIFICATIONS

This section generally describes four types of certifications that are required under the various sections of the *General Permit*. Only two of the required certifications have been officially executed at this time; namely, the Registrant's Certification and the Professional Engineer's Certification. The Contractor's Certification statement will need to be executed upon each of the Contractor's receipt of an award to perform the work associated with the landfill closure that will involve the soil erosion and sediment control requirements. In addition, the Certification of Documents will need to be prepared and executed whenever the SWPCP is amended; inspection logs, SMR forms or other official communications are submitted to the CT DEEP.

6.1 Registrant's Certification

The registrant and any other individual or individuals responsible for preparing the *General Permit Registration Form* must submit a written certification to the Commissioner of CT DEEP that states that they have complied with the minimum requirements stipulated in Sections 3(b)(8)(A) and 3(b)(8)(B) of the *General Permit* and have submitted the statement in conformance with Section 3(b)(8)(C) of the *General Permit.* In general, the statement certifies that they have completely and thoroughly reviewed the provisions of the *General Permit* and all the activities to be authorized under such permit and have made an affirmative determination to comply with the applicable terms and conditions of the permit. This statement is provided in Part VII of the Registration Form which is included in Appendix B.

6.2 Professional Engineer's Certification

The professional engineer responsible for the preparation, planning and design of the Stormwater Pollution Control Plan and the stormwater management systems must also submit a separate certification in conformance with Section 3(b)(9)(A) of the *General Permit* indicating that he/she has completely and thoroughly reviewed the provisions of the Stormwater Pollution Control Plan for the activity covered by this certification and certifies, based on such review and on the standard of care for such projects, that the Stormwater Pollution Control Plan has been prepared in accordance with the requirements of the *General Permit* and the applicable sections of the *Connecticut Guidelines for Soil Erosion and Sediment Control,* as amended, and that the controls required for such Plan are appropriate for the site. A copy of the executed Professional Engineer's Certification is included in Appendix F.

6.3 Contractor's Certification

In accordance with Section 5(b)(1)(B)(viii) of the *General Permit*, this SWPCP must also clearly identify each contractor and subcontractor who will be retained by the town to perform certain construction activities on the site that will have the potential to cause pollution of the waters of the State. Such contractor and subcontractor are also required to sign a certification statement that essentially requires him comply with the terms and conditions of the *General Permit*, including, but not limited to, the applicable requirements of the SWPCP prepared for the site.

Since the contractors or subcontractors have not yet been selected to work on this project, this SWPCP will need to be amended to include them as they are retained by the town. A copy of the Contractor's Certification statement to be signed by each of the contractors and subcontractors to be retained by the town is included in Appendix F.

6.4 Certification of Documents

Under Section 5(i) of the *General Permit*, any document which is submitted to the CT DEEP under the *General Permit* must be signed by the duly authorized representative of the town, and by the individual or individuals responsible for actually preparing such document, each of whom shall certify in writing that he/she has examined and is familiar with the information submitted in the document and that all attachments thereto, are based on reasonable investigation, the submitted information is true, accurate and complete to the best of their knowledge and belief.

It is therefore understood that when the SWPCP be amended, inspection logs, SMR forms or any other form of communication associated with this SWPCP be submitted to the CT DEEP; it must be accompanied by a certification statement for said document. The specific language required is as follows:

"I have personally examined and am familiar with the information submitted in this document and all attachments thereto, and I certify that, based on reasonable investigation, including my inquiry of those individuals responsible for obtaining the information, the submitted information is true, accurate and complete to the best of my knowledge and belief. I understand that a false statement made in this document or its attachments may be punishable as a criminal offense, in accordance with Section 22a-6 of the Connecticut General Statutes, pursuant to Section 53a-157b of the Connecticut General Statutes, and in accordance with any other applicable statute."

7. TERMINATION REQUIREMENTS

In accordance with Section 6(a) and 6(b) of the *General Permit, a*t the completion of the construction activities for this project, a *Notice of Termination* must be filed with the Commissioner of the CT DEEP. The project shall be considered complete after all post-construction measures are installed, cleaned and functioning and the site has been stabilized for at least a three month period following the cessation of construction activities. A site is considered stabilized when there is no active erosion or sedimentation present and no disturbed areas remain exposed for all phases of the construction.

Once the site is stabilized for at least three months, the town shall have the site inspected by a qualified inspector to confirm final stabilization and the town shall then indicate compliance with this requirement by submission of the *Notice of Termination* form as prescribed and provided by the CT DEEP. A copy of the current *Notice of Termination* is contained in Appendix G.

FIGURE 1

USGS Quadrangle Map

DRAWINGS

APPENDIX A

General Permit for the Discharge of Stormwater and

Dewatering Wastewaters from Construction Activities

APPENDIX B

General Permit Registration Form

APPENDIX C

Drainage Report

APPENDIX D

Routine Inspection Log - Report Forms

APPENDIX E

Stormwater Monitoring Report (SMR) Forms

APPENDIX F

Executed Certifications

PROFESSIONAL ENGINEER'S CERTIFICATION

General Permit for the Discharge of Stormwater and Dewatering Wastewaters Associated with Construction Activities

Municipal Bulky Waste Disposal Area
Newington, Connecticut

I hereby certify that I am a professional engineer licensed in the State of Connecticut. I am making this certification in connection with a registration under such general permit, submitted to the commissioner by Town of Newington for the proposed closure of the existing municipal bulky waste disposal located Main Street, south of Churchill Park in Newington, Connecticut. I certify that I have thoroughly and completely reviewed the Stormwater Pollution Control Plan for the project or activity covered by this certification. I further certify, based on such review and on the standard of care for such projects, that the Stormwater Pollution Control Plan has been prepared in accordance with the Connecticut Guidelines for Soil Erosion and Sediment Control, as amended, the Stormwater Quality Manual, as amended, and the conditions of the general permit, and that the controls required for such Plan are appropriate for the site. I further certify, based on reasonable investigation, including my inquiry of those individuals responsible for obtaining such information, that the information upon which this certification is based is true, accurate and complete to the best of my knowledge and belief. I also understand that knowingly making any false statement in this certification may subject me to sanction by the Department and/or be punishable as a criminal offense, including the possibility of fine and imprisonment, under section 53a-157b of the Connecticut General Statutes and any other applicable law.

Name of Professional Engineer

Loureiro Engineering Associates, Inc.
100 Northwest Drive
Plainville, CT 06062

Salvatore A. Palaia, P.E.
Vice President

Signature: _____

Date: _____

INDIVIDUAL CONTRACTOR'S CERTIFICATION
General Permit for the Discharge of Stormwater and Dewatering Wastewaters
Associated with Construction Activities
Municipal Bulky Waste Disposal Area
Main Street, Newington, Connecticut

I certify under penalty of the law that I have read and understand the terms and conditions of the General Permit for the Discharge of Stormwater Associated with Construction Activities. I understand that as a contractor or subcontractor at the site, I am covered by this general permit, and must comply with the terms and conditions of this general permit, including but not limited to the requirements of the Stormwater Pollution Control Plan prepared for the site.

_____
Name of Contract Firm

_____
Street Address

_____
City, State, Zip

_____
Telephone Number (including area code)

_____
Authorized Signature

_____
Printed Name

_____
Title

_____
Date

APPENDIX G

Notice of Termination

LEGEND

- Property Line
- Chain Link & Wire Fence
- Tree Line
- Approx. Limits of Wetlands
- 128 Existing Contour
- CLCB Type CL Catch Basin
- Existing Monitoring Well Location
- CHD Monument

Notes:

1. Topography from map reference 2A supplemented with topography provided by the Town of Newington.
2. Map References:
   - A. "Topographic Survey, Existing Conditions, Town of Newington Landfill, Main Street, Newington, Connecticut," scale: 1'=50' dated 2/5/08 prepared by Loureiro Engineering Associates, Inc.
   - B. "Town of Newington Churchill Park Annex Newington, Connecticut." by Alfred Associates, Scale: 1"=100' and dated April 22, 1983.
   - C. "Proposed Bulky waste Landfill Site Main Street Newington Connecticut." By Peter Arburr, Scale: 1"=50' dated November 1981 and revised to September 20, 1988.
   - D. "Connecticut State Highway Department Right Of way Map Town Of Newington South Main Street From Robbins Ave. Southerly About 5,700 Feet." Sheet 1 of 3, By Connecticut State Highway Department, Scale: 1"=40' and dated July 31, 1930.
   - E. "Town of Newington, Tax Map Route No. 23/188.008 as prepared by the Town Planning Department, GIS WebParcel - City of Newington, CT.
3. Wetlands depicted hereon from Amended Inland Wetlands and Watercourses Map, Application 2015-01A approved by the Town of Newington Conservation Commission on February 17, 2015.

REV.	DESCRIPTION OF REVISION	DATE	APPR.
3.	Modifications per Town Engineer.	5/27/2015	S.A.P.
2.	Prepared for presentation.	3/17/2015	G.F.A.
1.	Wetlands updated to new amended wetlands map approved 2/17/2015	3/2/2015	S.A.P.

STATE OF CONNECTICUT ★ STEVEN A. PALAM ★ LICENSED PROFESSIONAL ENGINEER

Loureiro Engineering Associates, Inc.
100 Northwest Drive • Plainville, Connecticut 06062
Phone: 860-747-6181 • Fax: 860-747-8822
An Employee Owned Company • www.Loureiro.com

Town of Newington • Office of the Town Engineer
131 Cedar Street
Newington, Connecticut 06111

SCALE	DATE	DATE
1"=40'	12/29/2014	12/29/2014
COMM. NO. 622NE4.03	DRAWN BY P.M.C.	APPROVED BY S.A.P.

NEWINGTON BULKY WASTE DISPOSAL AREA
MAIN STREET, NEWINGTON, CONNECTICUT

EXISTING CONDITIONS MAP

Loureiro
Engineering • Construction • RM&E • Energy • Water

DRAWING E-1

SHEET NO. 7 NO. OF SHEETS 7

G:\AUTOCAD\PROJECTS\NEWINGTON\BWMC DISPOSAL\NEW WAY EXISTING\EXISTING CONDITIONS REVISED 2015\2015.DWG File: EX COND Saved: 5/26/2015 11:16 AM Plotted: 5/26/2015 1:33 PM

© Loureiro Engineering Associates, Inc. All rights reserved 2012

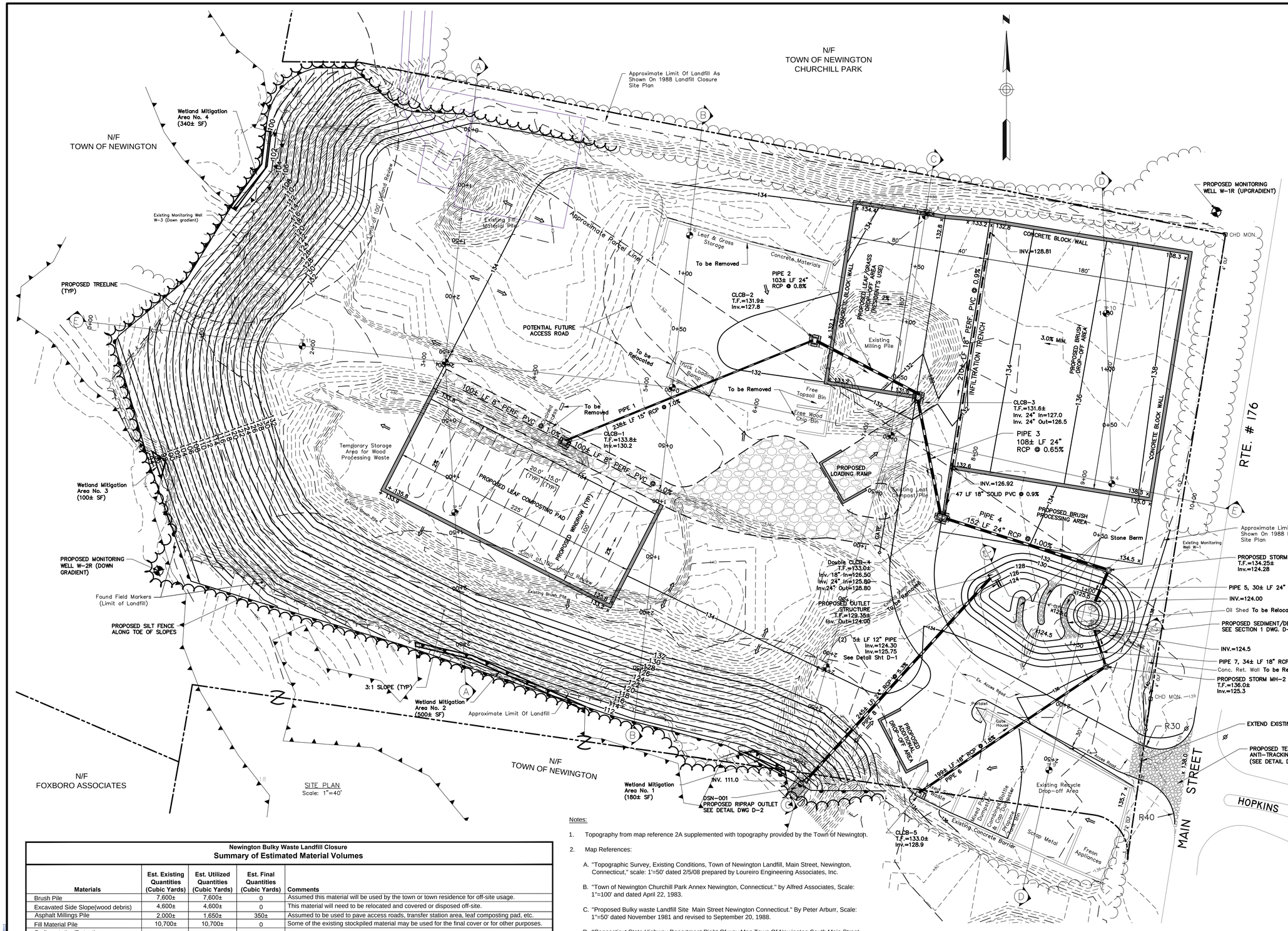

LEGEND

- Property Line
- Approximate Limit of Landfill
- Chain Link & Wire Fence
- Tree Line
- CHD Monument
- Approx. Limits of Wetlands
- Approximate 100' Upland Review Area
- 128 Existing Contour
- 132 Proposed Contour
- CLCB Type CL Catch Basin
- TP 6 Test Pit Location & Number
- x 130.0 Proposed Spot Elevation
- Surface Runoff Direction
- Proposed Silt Fence
- Proposed Monitoring Well
- Proposed Gravel Areas
- Proposed Wetland Mitigation Area

TOWN OF NEWINGTON
LANDFILL SITE TEST PITS

1/20/10

Test Pit #1
0 - 4" Gravel with fine silts
4" - 22" Brown gravel with sand and fines
22" - Bottom organic material

Test Pit #2
0 - 7" Organics and millings
7" - 35" Gravel, reddish, silt, processed stone
35" - Organic debris

Test Pit #3
0 - 17" Black organic (water) 14
17" - 72" Reddish clay with gravel
72" - 84" Organic material with gravel

Test Pit #4
0 - 20" Dark organic leaf mulch (water)
20" - 20" Water seeping @ 20"
20" - 30" Reddish fine sand with gravel
30" - 40" Brownish silty clay
40" - 84" Reddish silt mixed with sand

Test Pit #5
0 - 18" Gravel with construction debris
18" - 34" Brownish, sandy, gravel with fines
34" - Bottom organic material

Test Pit #6
0 - 11" Millings with organics (water 8")
11" - 36" Sandy material with fines
36" - 56" Red gravel with fines clay
56" Organic material bottom

Test Pit #7
0 - 2" Gravel
2" - 12" Brown silty sand
12" - 15" Sand mixed millings
15" - 48" Brown gravel silt
48" Bottom organic debris

Test Pit #8
0 - 8" Topsoil with roots
8" - 20" Brown, sand, gravel
20" - 28" Gray, gravel, sand, silty, fines
28" - 42" Brown gravel
42" Bottom organic material

Test Pit #9
0 - 3" Sand mixed with millings
3" - 8" Red fine sand with processed gravel
8" - 17" Millings mixed with sandy gravel
17" - 48" Red fine sand, some silt, some gravel
48" Bottom of test pit
No refuse found - No water

Test Pit #10
0 - 22" Dark organic fill with sand
22" - 27" Reddish sandy clay with gravel (water)
27" - 72" Brown gravel, silt, organic
72" - 84" Reddish silty clay (virgin material)

Test Pit #11
0 - 18" Gravel sandy brown/reddish
18" - 27" Brownish gravel with debris
28" - 36" Brown gravel fines/silts
36" - Bottom organics

Newington Bulky Waste Landfill Closure
Summary of Estimated Material Volumes

Materials	Est. Existing Quantities (Cubic Yards)	Est. Utilized Quantities (Cubic Yards)	Est. Final Quantities (Cubic Yards)	Comments
Brush Pile	7,600±	7,600±	0	Assumed this material will be used by the town or town residence for off-site usage.
Excavated Side Slope(wood debris)	4,600±	4,600±	0	This material will need to be relocated and covered or disposed off-site.
Asphalt Millings Pile	2,000±	1,650±	350±	Assumed to be used to pave access roads, transfer station area, leaf composting pad, etc.
Fill Material Pile	10,700±	10,700±	0	Some of the existing stockpiled material may be used for the final cover or for other purposes.
Sedimentation/Detention Basin Excavation	2,890±	2,890±	0	Assumed to be used to satisfy the top soil and/or final cover requirements.
Totals	**27,790±**	**27,440±**	**350±**	
Total Site Grading (Cut & Fill)	1,500±			Represents difference between proposed final and existing grades.
Off-site Disposal (Brush Pile)	-7,600±			Estimated amount of mulch to be processed and/or disposed of off-site.
Estimated Material Remaining	**-6,100±**			
Est. Amount of Top Soil Required	**3,750±**			Based on minimum of 4" placed on proposed lawn areas obtained from available onsite organic fill material.

Notes:

1. Topography from map reference 2A supplemented with topography provided by the Town of Newington.
2. Map References:
   A. "Topographic Survey, Existing Conditions, Town of Newington Landfill, Main Street, Newington, Connecticut," scale: 1'=50' dated 2/5/08 prepared by Loureiro Engineering Associates, Inc.
   B. "Town of Newington Churchill Park Annex Newington, Connecticut." by Alfred Associates, Scale: 1"=100' and dated April 22, 1983.
   C. "Proposed Bulky waste Landfill Site Main Street Newington Connecticut." By Peter Arburr, Scale: 1"=50' dated November 1981 and revised to September 20, 1988.
   D. "Connecticut State Highway Department Right Of way Map Town Of Newington South Main Street From Robbins Ave. Southerly About 5,700 Feet." Sheet 1 of 3, By Connecticut State Highway Department, Scale: 1"=40' and dated July 31, 1930.
   E. "Town of Newington, Tax Map Route No. 23/188.008 as prepared by the Town Planning Department, GIS WebParcel - City of Newington, CT.
3. Wetlands depicted hereon from Amended Inland Wetlands and Watercourses Map, Application 2015-01A approved by the Town of Newington Conservation Commission on February 17, 2015.

Wetland Mitigation Notes:

Four (4) "Wetland Mitigation Areas" shall be provided as shown on the site plan covering a total of 1,120 SF. Each area to be restored with native hydrophytic herbaceous species and grass species equal to a "New England Wetmix" as specified under the Loaming & Seeding heading on drawing D-1.

REV.	DESCRIPTION OF REVISION	DATE	APPR.
7.	Modifications per Town Engineer.	05/27/2015	S.A.P.
6.	Drainage system modifications.	04/16/2015	S.A.P.
5	Wetlands and upland review area updated to map amendment approved 2/17/2015	3/2/2015	S.A.P.
4	Wetlands from soil scientist added, note 3 revised, modified entrance.	9/29/2014	S.A.P.
3	Added Note 3 and defined Landfill Limits Markers	10/10/2012	S.A.P.
2	Catch basin & Perforated pipe added at Compost Pad	7/12/2012	S.A.P.
1	benchmark Added	11/29/2010	S.A.P.

Loureiro Engineering Associates, Inc.
100 Northwest Drive • Plainville, Connecticut 06062
Phone: 860-747-6181 • Fax: 860-747-8822
An Employee Owned Company • www.Loureiro.com

Town of Newington • Office of the Town Engineer
131 Cedar Street
Newington, Connecticut 06111

SCALE	DATE	DATE
1"=40'	11/23/2010	11/23/2010
COMM. NO. 62NE203	DRAWN BY P.M.C.	APPROVED BY S.A.P.

NEWINGTON BULKY WASTE DISPOSAL AREA
MAIN STREET, NEWINGTON, CONNECTICUT

LANDFILL CLOSURE PLAN
SITE PLAN

Loureiro
Engineering • Construction • EMES • Energy • Water

DRAWING C-1

SHEET NO. 2 NO. OF SHEETS 7

© Loureiro Engineering Associates, Inc. All rights reserved 2012

G:\AUTOCAD\PROJECTS\NEWINGTON\WWW_SUBMISSION\MAY 2015\NEWINGTON LCP REV 7C.DWG TIE: SITE PLAN Saved: 5/26/2015 11:05 AM Printed: 5/26/2015 1:03 PM

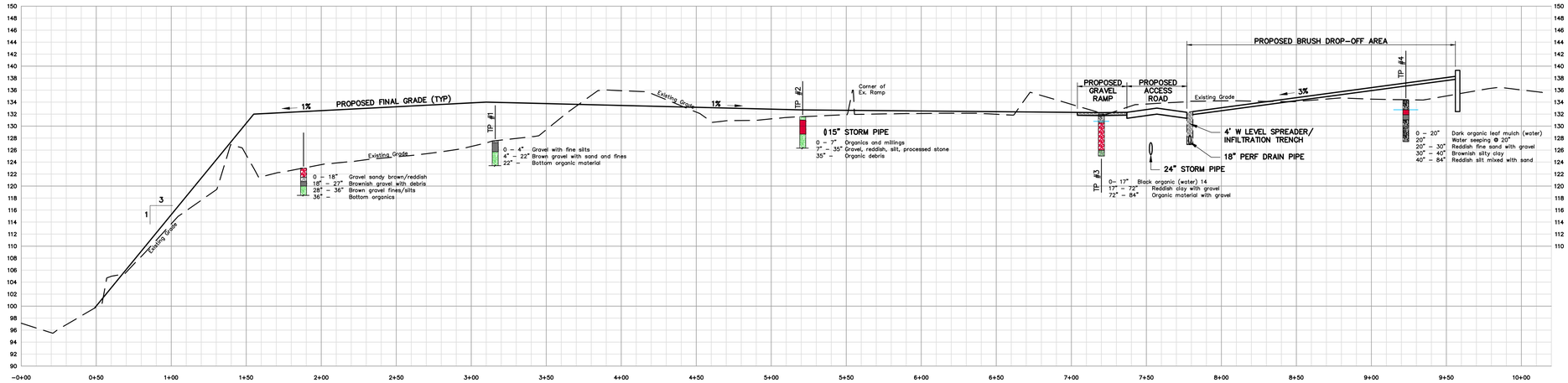

E–E LONGITUDINAL SECTION
Scales: Horz. 1"=40'
Vert. 1"=10'

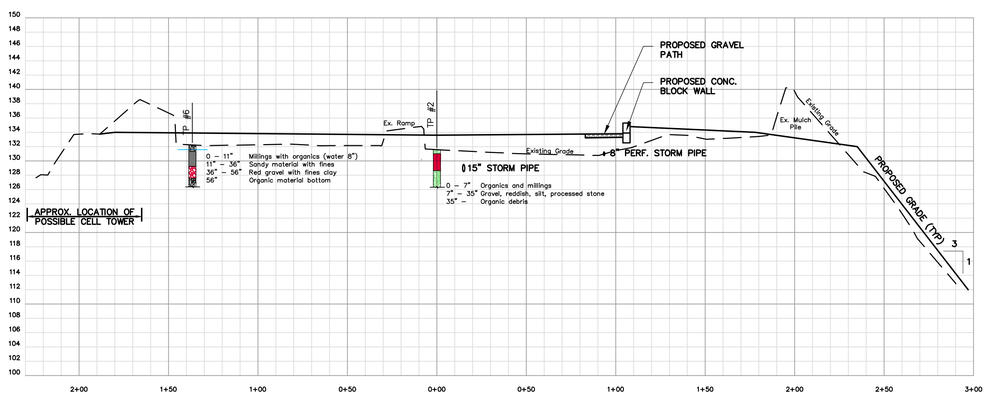

B–B SECTION
Scales: Horz. 1"=40'
Vert. 1"=10'

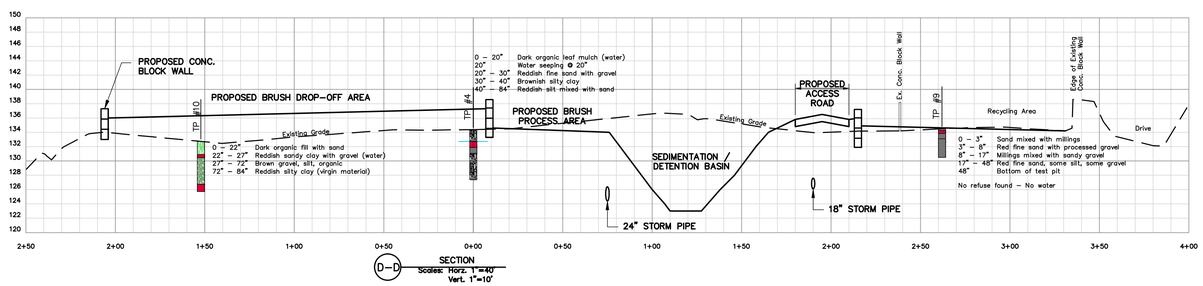

D–D SECTION
Scales: Horz. 1"=40'
Vert. 1"=10'

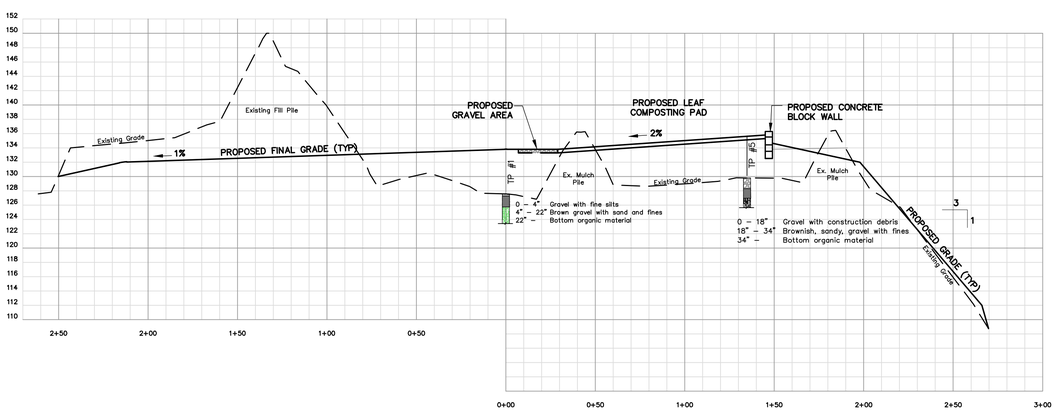

A–A SECTION
Scales: Horz. 1"=40'
Vert. 1"=10'

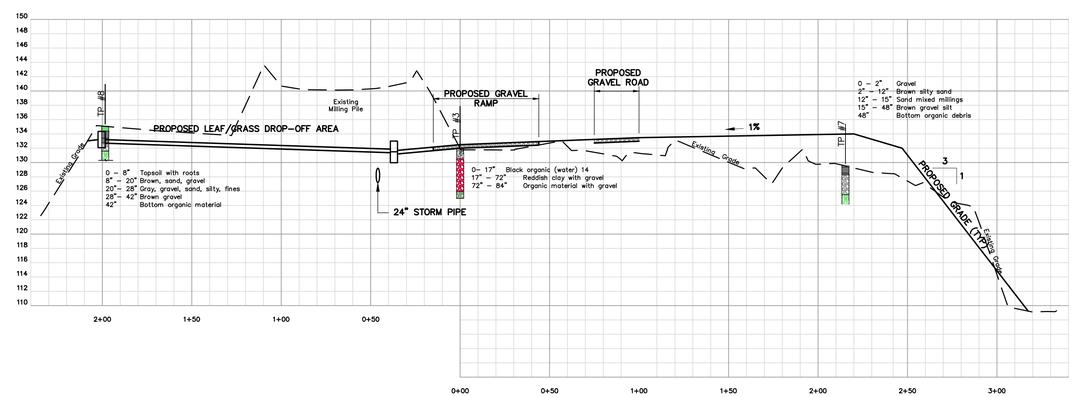

C–C SECTION
Scales: Horz. 1"=40'
Vert. 1"=10'

REV.	DESCRIPTION OF REVISION	DATE	APPR.
3.	Modifications per Town Engineer.	05/27/2015	S.A.P.
2.	Drainage system modifications to section C and D.	04/16/2015	S.A.P.
1.	Catch basin & perforated pipe added at Compost Pad	7/12/2012	S.A.P.

STATE OF CONNECTICUT · SALAM · 18452 · LICENSED PROFESSIONAL ENGINEER

Loureiro Engineering Associates, Inc.
100 Northwest Drive • Plainville, Connecticut 06062
Phone: 860-747-6181 • Fax: 860-747-8822
An Employee Owned Company • www.Loureiro.com

Town of Newington • Office of the Town Engineer
131 Cedar Street
Newington, Connecticut 06111

SCALE	DATE	DATE
AS NOTED	11/23/2010	11/23/2010
DRAWING NO. 62NE203	DRAWN BY P.M.C.	APPROVED BY S.A.P.

NEWINGTON BULKY WASTE DISPOSAL AREA
MAIN STREET, NEWINGTON, CONNECTICUT

LANDFILL CLOSURE PLAN
SECTIONS

DRAWING
SEC-1

SHEET NO. 4 NO. OF SHEETS 7

© Loureiro Engineering Associates, Inc. All rights reserved, 2012

C:\AUTOCAD\PROJECTS\NEWINGTON\NEWINGTON BULKY WASTE\SUBMISSION\MAY 2015\SUBMISSION\SEC-1 REV 3.DWG FILE: SECTION Saved: 5/26/2015 1:15:22 PM Printed: 5/26/2015 1:15 PM

SUGGESTED SEQUENCE OF CONSTRUCTION ACTIVITIES

1. Acquire any and all permits required to perform the work (including town and/or state permits).
2. Coordinate access and barricade work zones.
3. Install erosion control barriers at all down-gradient locations as shown on drawing or as determined necessary to facilitate the work and mitigate the discharge of sediment to the surface water and wetlands in the vicinity of the landfill.
4. Construct proposed sedimentation/detention basin as depicted on the drawings.
5. Excavate and stockpile all suitable top soil for future use.
6. Clear each area to be provided with the final cover material in a manner to minimize storm water run-off and/or disturbance to the existing operations conducted at the site.
7. Proceed cautiously with the regrading activities necessary to meet the subgrades and place and compact the final cover materials immediately after site preparation to avoid ponding or excess infiltration of the landfill surface.
8. Construct new paved access roads and storage areas.
9. Hydro-seed all disturbed and unpaved areas with seed mixture & mulch.

SPECIAL NOTES:

- The Contractor shall conduct his activities in such a manner to minimize land disturbance and to loam and regraded areas as soon as possible after construction work is completed. All other areas affected by construction and not to be filled are to be regraded to original grade and seeded.
- The Contractor shall be responsible for correcting any unforeseen field conditions.

TECHNICAL SPECIFICATION REQUIREMENTS

Unless otherwise noted, all construction shall confirm to the methods and materials cited in the State of Connecticut Standard Specifications for Roads, Bridges and Incidental Construction, Form 816, as amended.

SCOPE OF THE WORK

The Contractor shall provide all labor, materials, equipment and services necessary for the proper closure of the former Newington Bulky Waste Disposal Area as shown on these drawings and as specified herein. In general the work shall include the following items:

- Installation of all soil erosion and sediment controls, including erosion control barriers, anti-tracking pad, sediment/detention basin and riprap outlets.
- Clearing, grubbing and removal of all exposed bulky waste material, trees, logs and other debris as required for the new construction work.
- Construction of new improved paved access roads and storm water drainage system including all storm drain pipes and related structures.
- Regrading of the landfill site to minimize infiltration of storm water and surface runoff into and onto the existing disposal area.
- Placement of final cover systems consisting of a minimum 20 inch depth of a low-permeability barrier and 4" of top soil available from on-site materials.
- Mulching and seeding of the entire unpaved surface of the regraded disposal area, drainage channels and all other areas disturbed by construction.
- All required testing to comply with the compaction requirements of soil characteristics and growability analysis.

PROTECTION OF WATERCOURSES AND INLAND WETLANDS

All necessary precautions shall be taken to avoid damage to the natural watercourses and inland wetlands in the vicinity of the site. All applicable regulations or requirements of the CT DEP and the Town of Newington shall be adhered to including the placement of adequate soil erosion control barriers, sediment/detention basin and riprap outlets as specified herein and as shown on the drawings to avoid soil erosion and siltation of the neighboring surface waters and wetland areas. When the construction work is completed, the Contractor shall clean and restore the natural drainage areas affected by his operations to their original condition.

CLEARING, GRUBBING AND REMOVAL OF BULKY WASTE MATERIAL & SUITABLE TOPSOIL

The site shall be cleared and grubbed of all objectionable material prior to placement of the final cover systems and related site work. All bulky waste material shall be removed and deposited within the limits of the disposal area to be covered or shall be transported to an approved Solid Waste Transfer Station for proper disposal and/or recycling.

All topsoil within the areas disturbed by construction containing any organic material suitable for reuse shall be stripped and temporarily stockpiled in a suitable location on the site until ready for reuse as loam for the new construction.

RECONSTRUCTION OF EXISTING ACCESS ROAD

The existing access roads shall be reconstructed to the new alignment, grades and details as shown on the drawings. Proper slopes, grades, and alignments shall be constructed to ensure the satisfactory drainage at all times. Curb cut at Main Street shall conform to CT DOT requirements. All materials used for this work shall conform to the requirements of the latest edition of the Connecticut DOT "Standard Specifications for Roads and Bridges - Form 816", unless otherwise approved by the design Engineer or the Town of Newington .

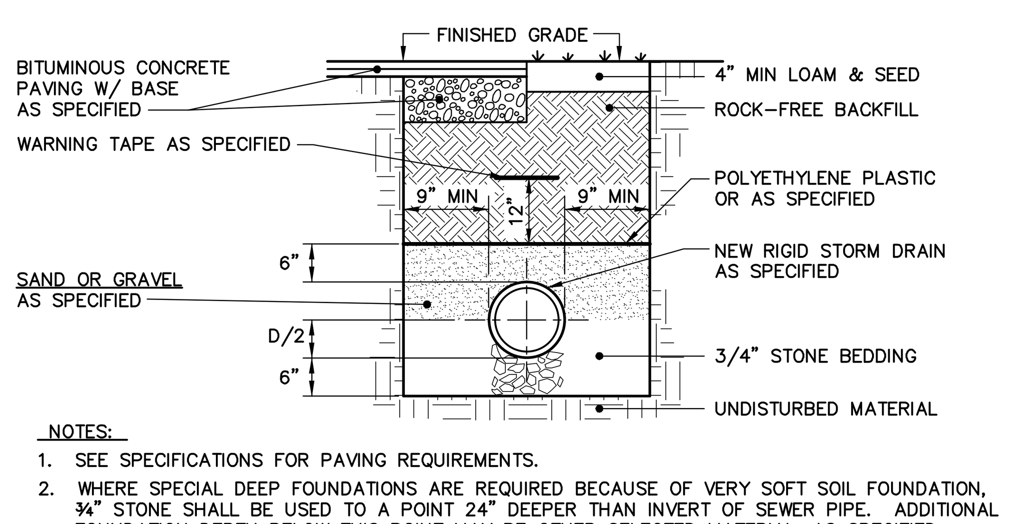

TYPICAL PIPE BEDDING AND TRENCH DETAIL

SCALE: NONE

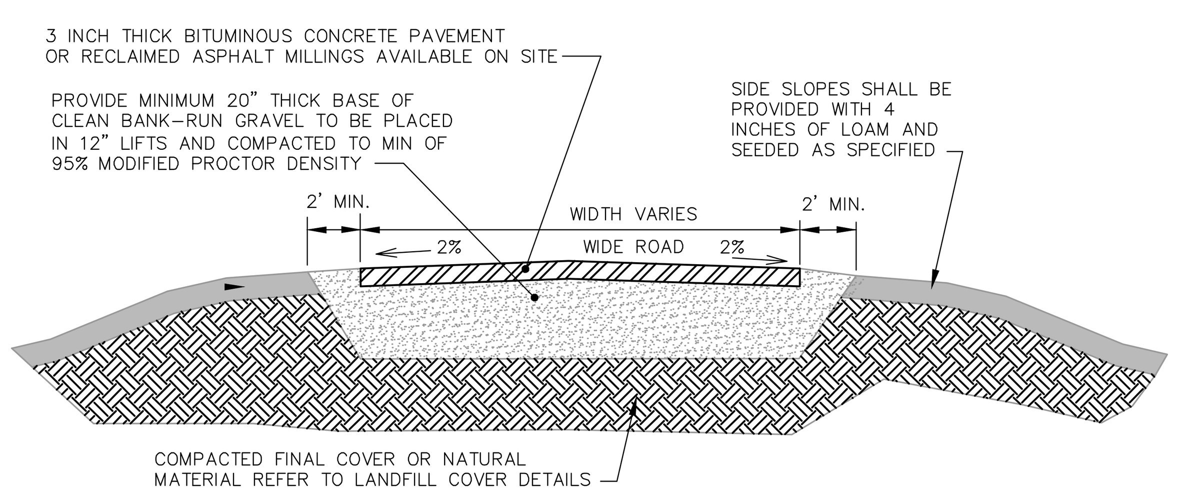

TYPICAL PAVED ACCESS ROADWAY SECTION

SCALE: NONE

INSTALLATION STORM WATER DRAINS

The new storm drains shall be installed in accordance with the layout plan and details depicted on the drawings. The drain lines shall be Reinforced Concrete Pipe (RCP), Class II conforming to ASTM specifications C-76 unless otherwise approved by the owner.

REGRADING OF EXISTING DISPOSAL AREA

The existing disposal area shall be regraded to achieve a final subbase for the final cover systems as shown on the drawings. All suitable excavated material within the limits of the new construction and stockpiles of existing soil located on the site shall be used where fill is required to bring contours to uniform slopes. All surfaces of excavations and backfill shall be carefully dressed to the subgrades as shown on drawings to receive subsequent construction.

The excavated fill material shall be placed and compacted in maximum 12 inch thick layers or as directed by the Engineer to achieve the specified compaction. The cut slopes shall be proof rolled to achieve the specified compaction. The density of each layer of fill shall be at least 80% Modified Proctor Density, except as otherwise specified beneath the access road and other areas. Refer to "Landfill Cover System" detail for soil compaction requirements for subsequent layers of the final cover system.

Field density tests shall be conducted by an independent test lab in the field when and where required by the Engineer to ensure that the compaction specified for fill and backfill is obtained. If field density tests indicate compaction to be less than that specified herein, the Contractor shall improve compaction by a method as approved by the Engineer until further tests indicate a density of at least that as specified herein is achieved at the expense of the Contractor.

FINAL COVER SYSTEMS

The Contractor shall install a two-layered final cover system over the regraded surface of the former disposal area as shown on the proposed site plan. As a minimum, there should be at least two feet of cover over all exposed bulky waste materials throughout the site. The top surface shall be pitched as indicated and the side slopes shall not exceed a grade of one vertical on three horizontal. A minimum of four inches of top soil shall be placed over 20 inches of a CT DEEP approved soil. Any imported soils used for the low permeability layer of the final cover shall either meet a permeability of 1X10-5 cm/sec or have approximately 15-20% fines passing a #200 sieve. Additionally, any excavated materials or stockpiles of existing soils stored on-site shall meet the requirements outlined in Regulations of Connecticut State Agencies (RCSA) Section 22a-209-1 before being used. The Contractor shall collect and analyze representative samples from the on-site materials to determine compliance with above requirements.

LOAMING AND SEEDING

The entire surface area of the regraded disposal area and all other areas disturbed by construction shall be loamed and seeded as specified herein. All stockpiled and/or imported loam used for the final cover system shall be cleared of large stones, roots, rubbish or foreign material prior to placement.

The loam within the limits of the final cover systems shall be virtually free of all pesticides, herbicides or other potential contaminants. The Contractor shall deliver representative samples to the UCONN's Soil Testing Lab, Plant Science Dept. in Storrs, CT for growability, lime and fertilizer recommendations. Once approved for growability, samples of the same top soil shall be submitted to a state certified laboratory to determine its contamination potential, which data shall meet the current residential direct exposure criteria and/or pollutant mobility criteria for a GA area.

After all areas have been brought to proper sub-grade, loam shall be spread to a depth of 4" with due allowance being made for settlement. Loam shall not be hauled over, tramped over or packed in any way and shall be left in a loose and pliable condition. Hydraulic or hydro-seeding shall be the preferred method of application for uniform seeding with integrated mulch. Seeding rates shall be increased by 10% when hydro-seeding is utilized. Lime and fertilizer shall be applied simultaneously with the seed in accordance with the recommendations to be provided by UCONN's Soil Testing Lab.

Seed for all loamed areas shall contain a mixture of several species including Creeping Red Fescue, Canada Wild Rye, Annual Ryegrass, Perennial Ryegrass, Blue Grama, Little Bluestem, Indian Grass, Rough Bentgrass and Upland Bentgrass: Identified as New England Erosion Control/Restoration Mix for Dry Sites. The New England Erosion Control/Restoration Mix shall be applied at a rate of 3.5 lbs/acre or 1250 sq. ft. per pound using hydro-seed equipment.

Each of the four wetland mitigation areas shown on the site plan shall be restored with native hydrophytic herbaceous and grass species, using a wetland seed mix equivalent to New England Wetmix, consisting of sedges and other herbaceous species with wetland indicator status. The seed mix shall provide a native community of wetland herbaceous plants to form the ground cover in the designated fringe areas. The New England Wetmix application rate shall be 1 pound per 2,500 square feet. The seed will be placed by hand to ensure thorough and even coverage. A total area of approximately 1,120 SF shall be sown.

All seeded areas not equipped with erosion control matting shall be fully mulched with blown chopped straw regardless of the seed application methods. Straw shall be applied at an application rate of 2 tons per acre minimum and 90-95% coverage leaving adequate relief for seed germination.

HEALTH AND SAFETY REGULATIONS & REQUIREMENTS

The Contractor shall notify Call-Before-You-Dig at least 72-hours before the start of work. The Contractor shall verify the known utilities and perform his own due diligence related to potential buried utilities.

The Contractor shall coordinate access and barricade work zones as appropriate to control access to the site during construction. The Contractor shall make safe and reasonable accommodations to facilitate the operation of the existing transfer station activities.

The Contractor shall comply with the Department of Labor, Safety and Health Regulations (CFR 29 Part 1926 dated June 24, 1974 and all subsequent amendments). The Contractor shall have a competent person or persons as required under the Occupational Safety and Health Act on the site to inspect the work and to supervise the conformance of the Contractor's operations with the regulations of the Act.

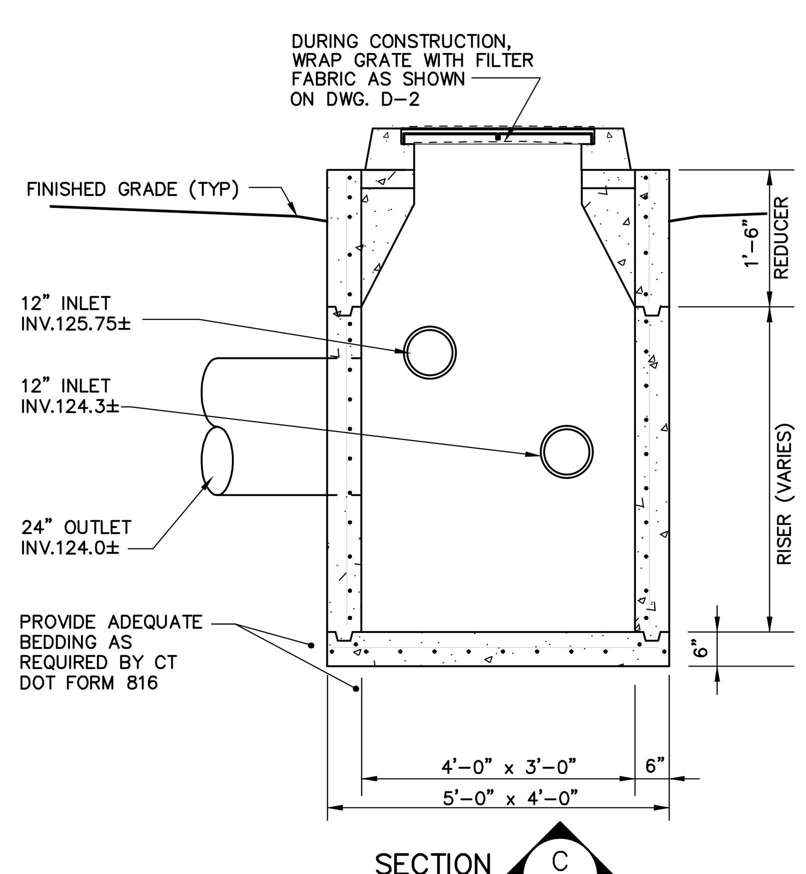

PROPOSED OUTLET STRUCTURE AT SEDIMENT/DETENTION BASIN

SCALE: NONE

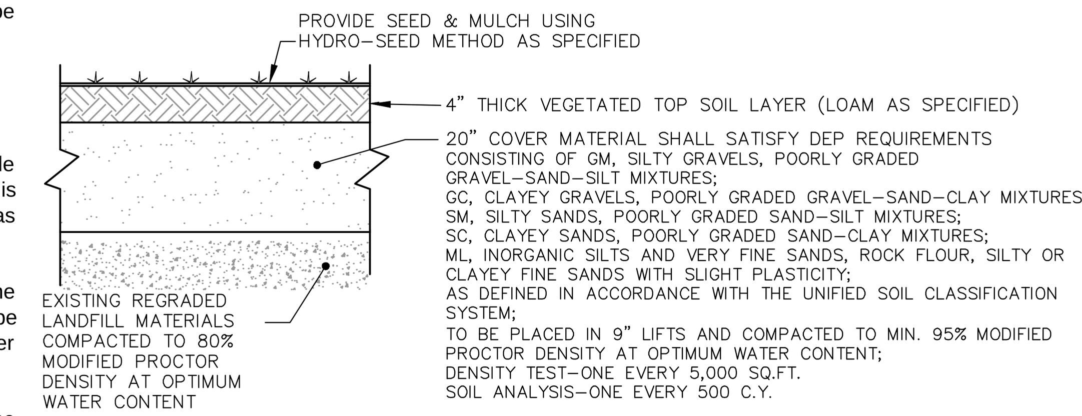

LANDFILL COVER SYSTEM DETAIL

SCALE: NONE

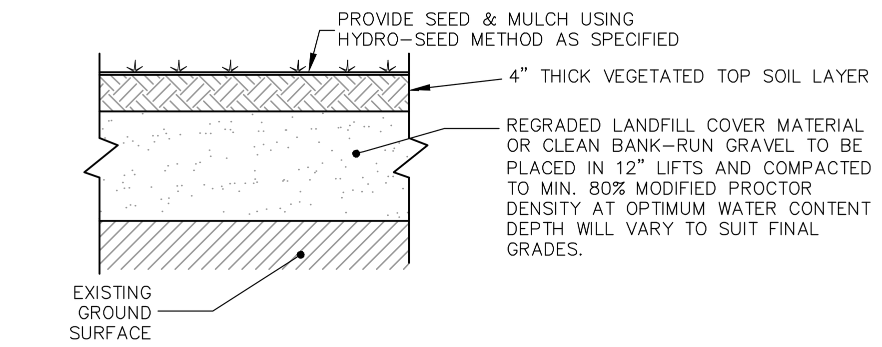

LANDCOVER DETAIL BEYOND LIMIT OF BULKY WASTE

SCALE: NONE

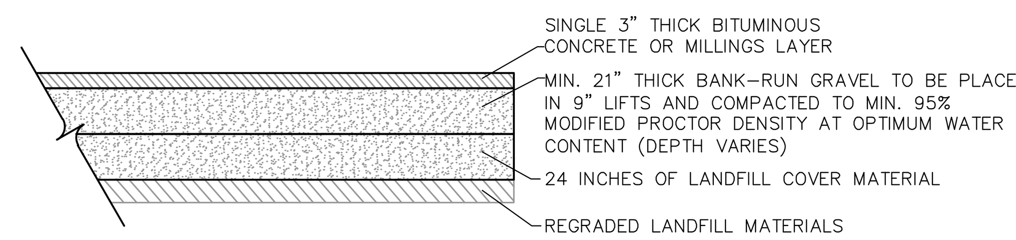

PAD DETAIL LOCATED BENEATH PAVED AREAS (Brush Processing, Leaf & Grass Drop-off)

SCALE: NONE

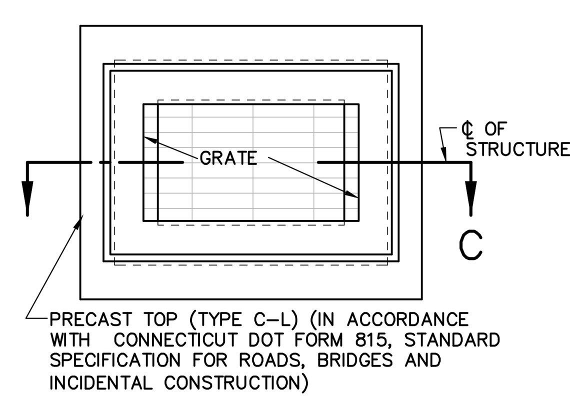

PLAN

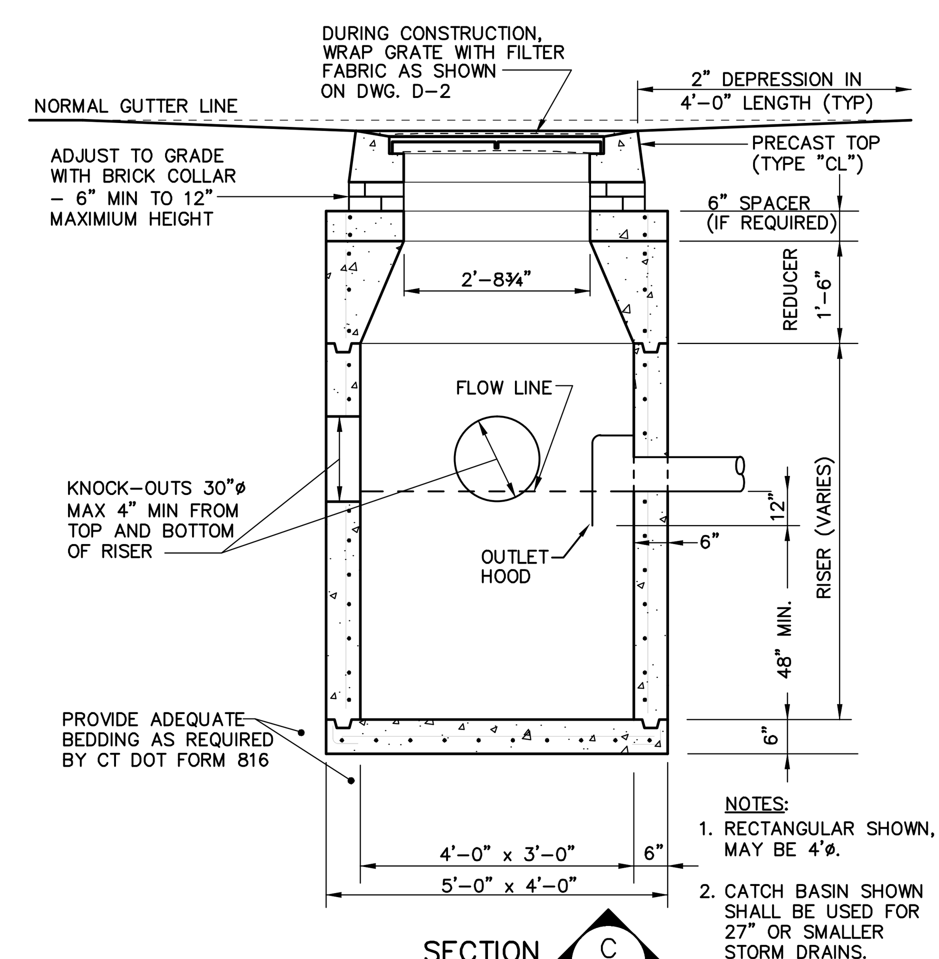

PRECAST CONCRETE CATCH BASIN WITH OUTLET HOOD

SCALE: NONE

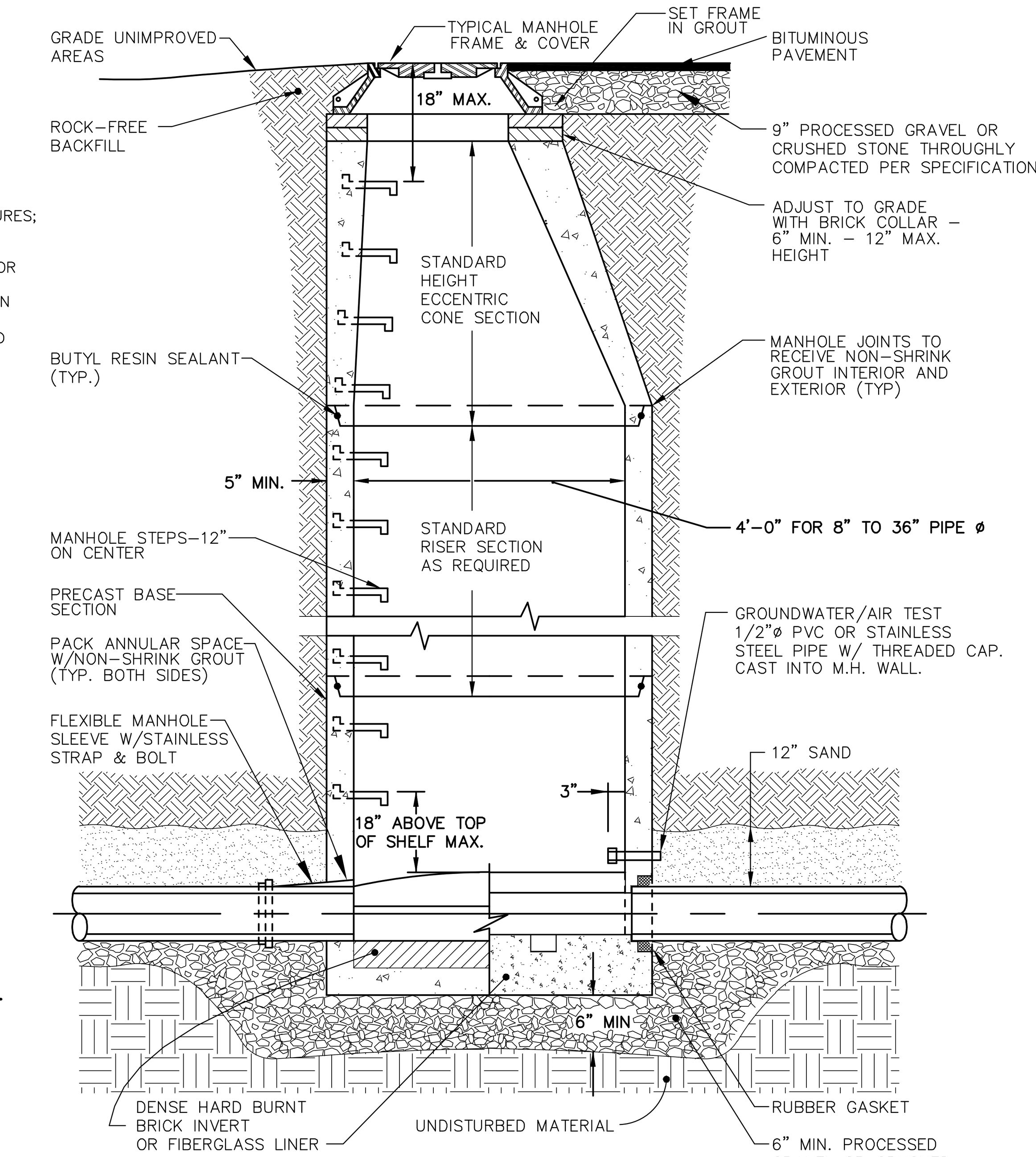

NOTE

DESIGN LOADING:
AASHTO HS20-44 REINFORCED CONCRETE MANHOLE SECTIONS CONFORMING TO ASTMC-478 STEEL REINFORCEMENT: ASTM A-615-75, GRADE 6, 1" MIN. COVER CONCRETE MIN. STRENGTH: 5000 PSI @ 28 DAYS

PRECAST CONCRETE MANHOLE

SCALE: NONE

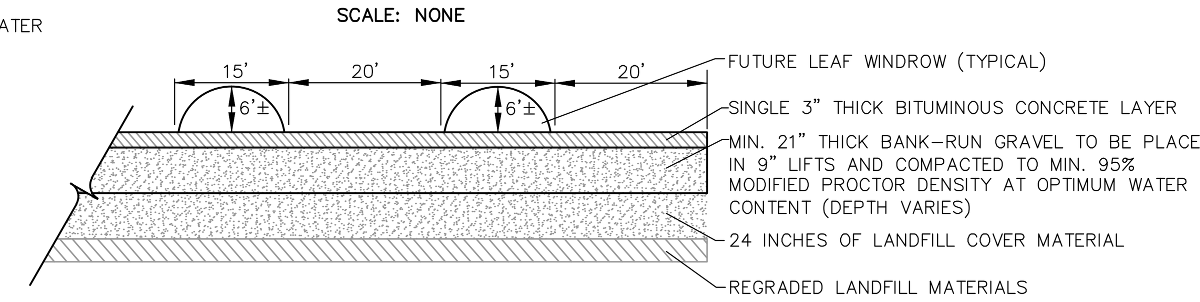

LEAF COMPOSTING PAD DETAIL

SCALE: NONE

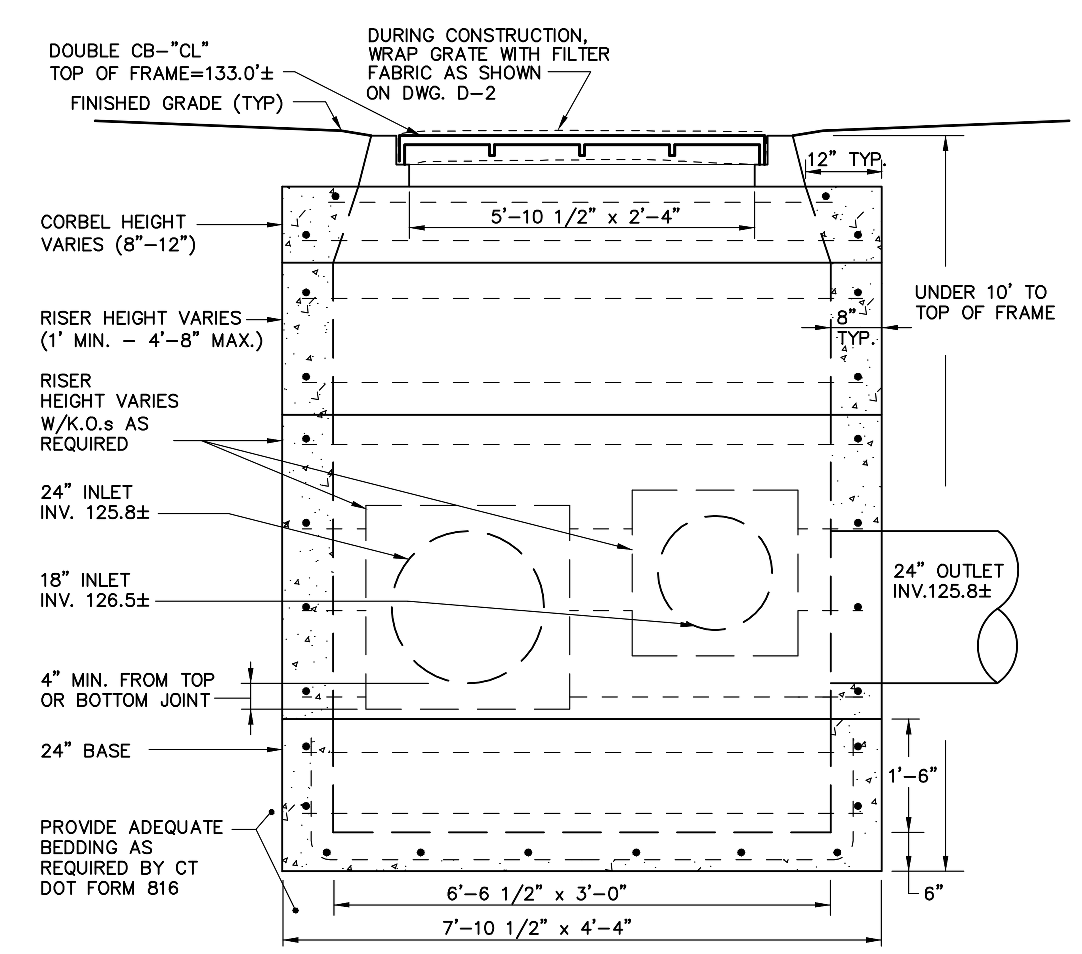

PROPOSED DOUBLE CATCH BASIN CTDOT TYPE @ CLCB-4

SCALE: NONE

REV.	DESCRIPTION OF REVISION	DATE	APPR.
2.	Modifications per Town Engineer.	05/27/2015	S.A.P.
1	Added note for minimum thickness of bank-run gravel	7/12/2012	S.A.P.

Loureiro Engineering Associates, Inc.
100 Northwest Drive • Plainville, Connecticut 06062
Phone: 860-747-6181 • Fax: 860-747-8822
An Employee Owned Company • www.Loureiro.com
Engineering • Construction • EH&S • Energy • Waste

Town of Newington • Office of the Town Engineer
131 Cedar Street
Newington, Connecticut 06111

SCALE: AS NOTED
COMM. NO.: 62NE203
DRAWN BY: P.M.C. DATE: 11/23/2010
APPROVED BY: S.A.P. DATE: 11/23/2010

NEWINGTON BULKY WASTE DISPOSAL AREA
MAIN STREET, NEWINGTON, CONNECTICUT

LANDFILL CLOSURE PLAN
TECHNICAL SPECIFICATIONS &
CONSTRUCTION DETAILS

Loureiro
Engineering • Construction • EH&S • Energy • Waste

DRAWING D-1

SHEET NO. 5 NO. OF SHEETS 7

G:\AUTOCAD\PROJECTS\62NE403\WWC SUBMISSION MAY 2015\62NE403-D01.DWG Tab: D-1 DETAILS Saved: 5/28/2015 11:58 AM Plotted: 5/28/2015 1:04 PM

SOIL EROSION AND SEDIMENT CONTROL NOTES

General Provisions

All applicable regulations and requirements of the State of Connecticut Department of Environmental Protection (DEP) and the local Inland Wetlands Commission shall be adhered to including the placement of the proposed sedimentation/detention basin and SE&SC barriers as depicted on this plan and as specified herein. When the construction work is completed, the Contractor shall remove sediment from the sedimentation/detention basin and restore the natural drainage areas affected by his operations to their original condition unless otherwise noted.

Prior to construction of the final cap, all SE&SC barriers should be placed to confine sediment as shown on drawings and where otherwise required based on the Contractor's means/methods and construction sequencing. All SE&SC barriers shall be left in place and maintained until the work has been completed and surfaces stabilized.

It shall be the responsibility of the Contractor to monitor the condition of the SE&SC structures. If the effectiveness or integrity of the structures is found to be insufficient or if the structures are damaged in any way, the Contractor shall make whatever repairs are necessary to ensure that proper erosion control is maintained. Monitoring of the erosion control structures is particularly important in the areas where excavation or construction is taking place or following periods of rainfall. All repairs of erosion control structures shall be made by the Contractor as soon as the damage is discovered. If additional SE&SC control structures are necessary to minimize erosion and sedimentation, as determined in the field, the Contractor shall install said additional structures as required at no extra cost to the Town.

Specific Provisions

In addition to the above general provisions, the Contractor shall comply with the following special requirements:

1. Land disturbance shall be kept to a minimum; restabilization shall be scheduled as soon as practicable following construction. Project sequencing will be necessary to minimize SE&SC control liabilities. The Contractor shall sequence his operations so as to provide manageable work areas with limited opportunity for soil erosion to occur.
2. All graded areas are to be loamed and seeded as soon as possible after construction work is completed. Interim seeding, mulching and/or erosion control blankets may be required throughout construction for stabilization of disturbed areas.
3. All other areas affected by construction and not to be regraded or filled are to be restored to original grade and seeded as shown on drawing C-1.
4. For specific details on the design, application and installation of the erosion and sedimentation control structures the Contractor shall refer to the Connecticut Guidelines for Soil Erosion and Sediment Control, dated May 2002, as amended or otherwise replaced.
5. Fabric for SE&SC barriers shall consist of woven polypropylene, 36" in width and fastened to hardwood posts with three, one inch wide crown staples. Posts shall be of sound hardwood, forty eight inches (48") in length with a minimum cross section of 1.125 square inches. Staked hay bales may be substituted for silt fence. All SE&SC barriers shall be installed as shown on this drawing and at the toe of all slopes located down gradient of the construction work.
6. Sediment removed from SE&SC barriers and sediment/detention basin shall be disposed of in a manner which is consistent with the intent of the plan.
7. The Contractor and/or the Town of Newington shall be responsible for the registration of this site under the "General Permit for the Discharge of Storm Water and Dewatering Waste Waters from Construction Activities" and for the preparation of a Storm Water Pollution Prevention Plan (SWPPP) and for implementing the erosion and sediment control requirements of the SWPPP and the local requirements, if applicable. This plan shall be maintained at the site at all times.
8. The Contractor shall be responsible for notifying the local Inland Wetlands agency and other appropriate authorities at least 72 hours prior to the start of any construction activity.
9. The Contractor shall use approved methods and materials for prevention of dispersion of dust.
10. The Contractor shall inspect all erosion control measures daily during construction and after each significant rain storm event. In the event that a rain event occurs and the Contractor provided SE&SC controls fail to maintain the site in a stabilized condition, the Contractor shall be fully responsible for any and all remediation, mitigation or other damage that may occur.

NOTE:
The Contractor shall be fully responsible for ownership of all soil erosion and sediment controls as necessary to protect this site. During the progress of construction, interim erosion controls may be necessary based on the Contractors means, methods and sequencing. The erosion control measures presented on these plans represent the minimum controls deemed necessary based on the expected final project grades and features. Interim measures required to stabilize the site during construction shall be installed by the Contractor as needed based upon his assessment of the site through his own site inspections and observations.

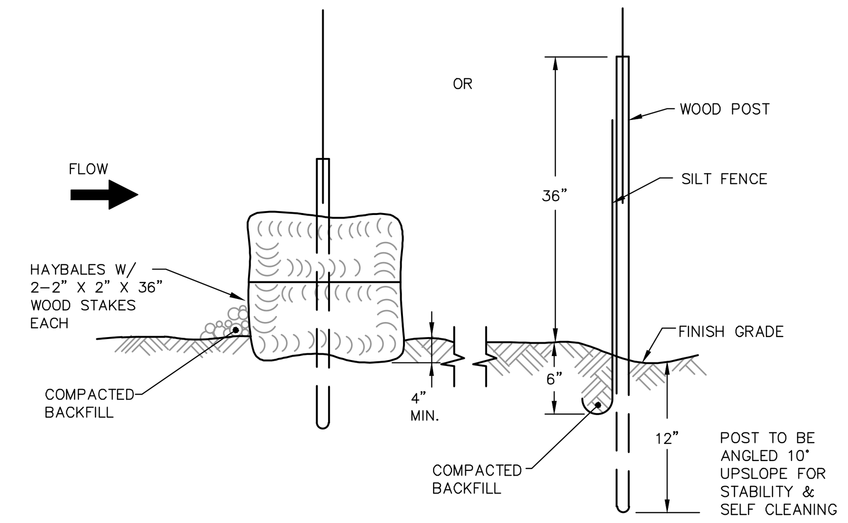

TYPICAL SE&SC BARRIER DETAIL
SCALE: NONE

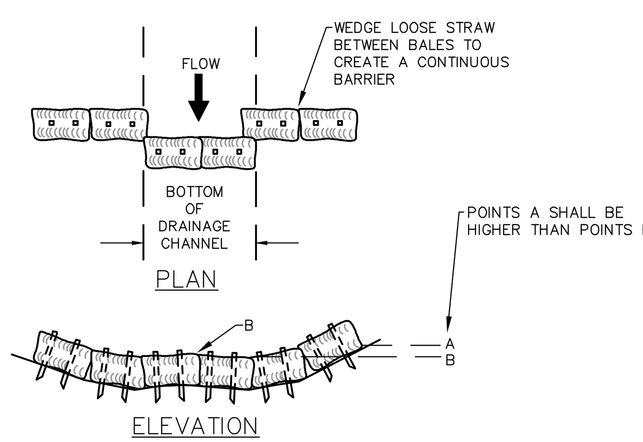

TYPICAL SE&SC BARRIER DETAIL WITHIN SWALE
SCALE: NONE

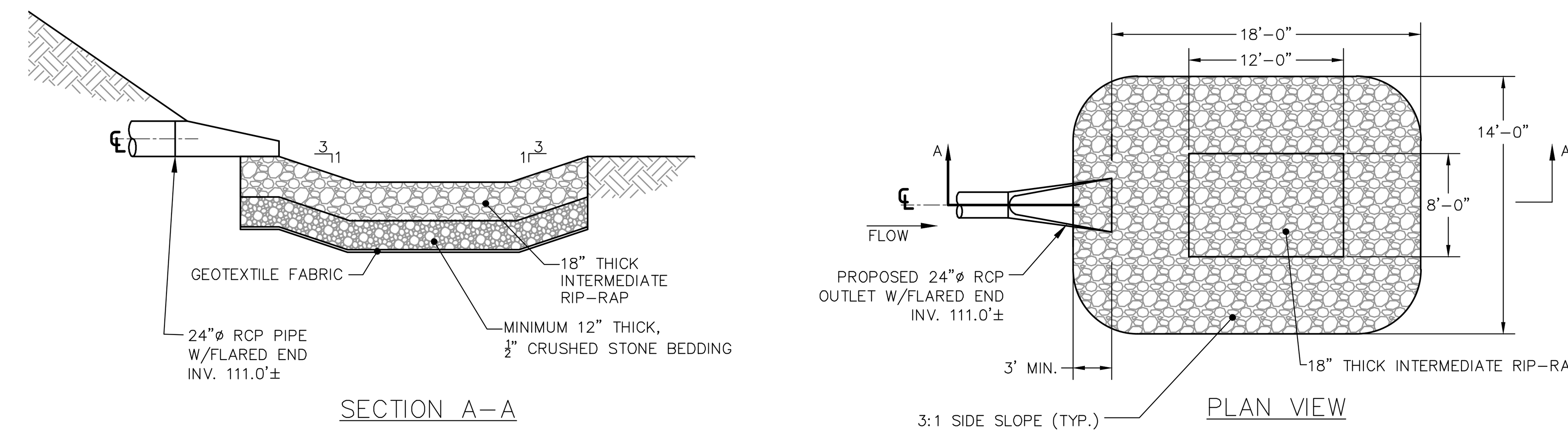

RIP-RAP OUTLET
SCALE: NONE

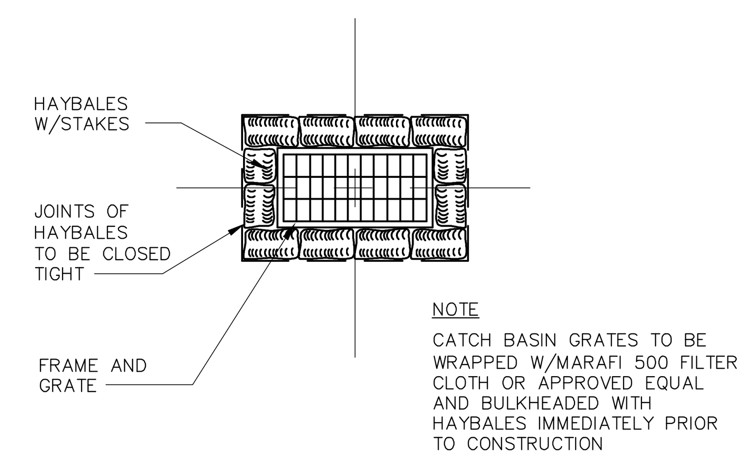

SEDIMENT BARRIER AT CATCH BASIN
SCALE: NONE

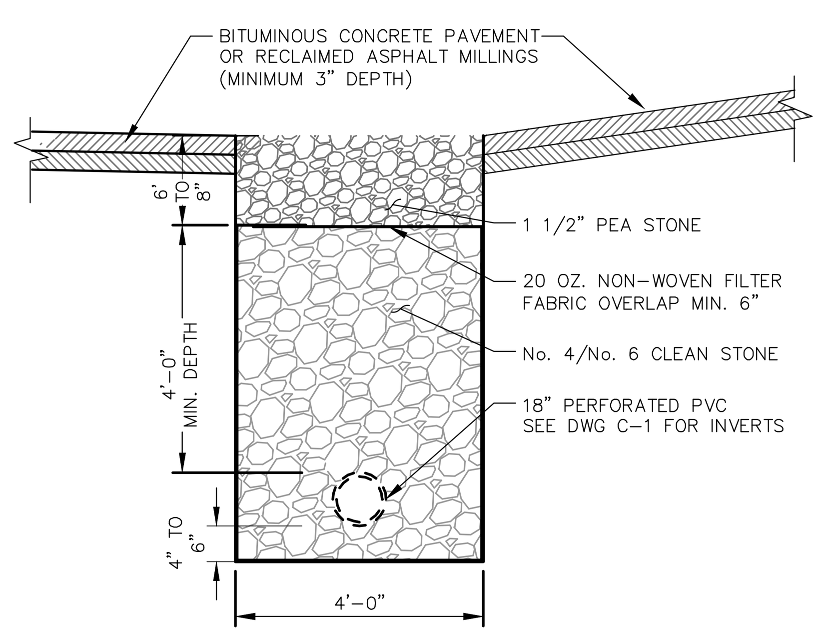

INFILTRATION TRENCH DETAIL
SCALE: NONE

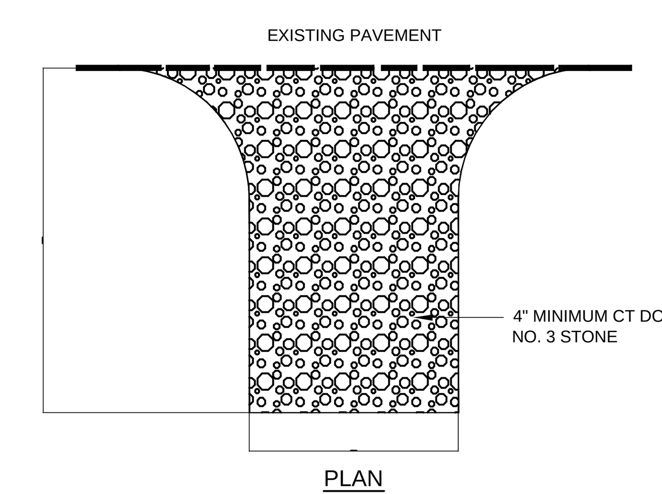

PLAN

NOTES:

1. THE PURPOSE OF A STABILIZED CONSTRUCTION ENTRANCE IS TO REDUCE THE TRACKING OR FLOWAGE OR SEDIMENT ONTO EXISTING PAVEMENT.
2. BEFORE CONSTRUCTION ENTRANCE INSTALLATION, THE AREA OF THE ENTRANCE SHOULD BE CLEARED OF ALL VEGETATION, ROOTS AND OTHER UNDESIRABLE MATERIAL.
3. THE ENTRANCE SHOULD BE MAINTAINED IN A CONDITION WHICH WILL PREVENT TRACKING OR FLOWING OF SEDIMENT ONTO EXISTING PAVEMENT. THIS WILL REQUIRE PERIODIC TOP DRESSING WITH ADDITIONAL STONE OR ADDITIONAL LENGTH AS CONDITIONS REQUIRE.
4. THIS AREA TO BE PROVIDED WITH A MINIMUM OF 3" OF BITUMINOUS CONCRETE PAVEMENT UPON COMPLETION OF LANDFILL CLOSURE ACTIVITIES.

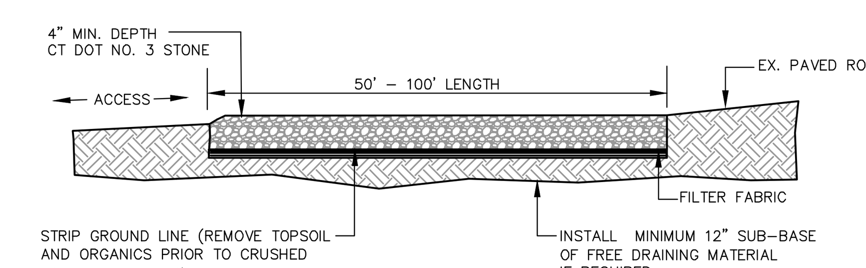

SECTION

ANTI-TRACKING PAD DETAIL
SCALE: NONE

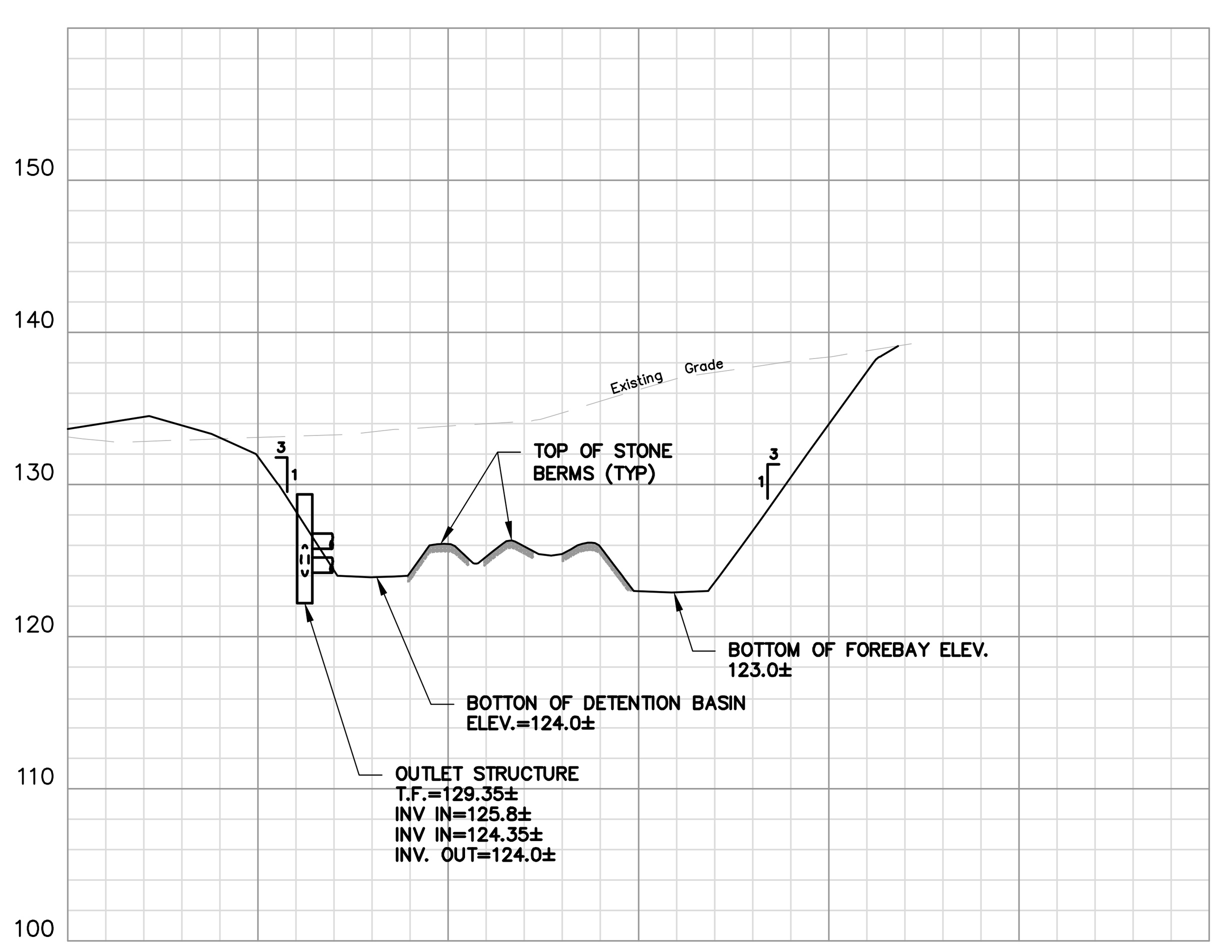

1 SECTION THROUGH SEDIMENTATION/DETENTION BASIN
SCALE: 1" = 40' Horiz., 1" = 10' Vert.

REV.	DESCRIPTION OF REVISION	DATE	APPR.
2.	Modifications per Town Engineer.	05/27/2015	S.A.P.
1.	Drainage system modifications.	04/16/2015	S.A.P.

Loureiro
Engineering • Construction • EH&S • Energy • Waste
Loureiro Engineering Associates, Inc.
100 Northwest Drive • Plainville, Connecticut 06062
Phone: 860-747-6181 • Fax: 860-747-8822
An Employee Owned Company • www.Loureiro.com

Town of Newington • Office of the Town Engineer
131 Cedar Street
Newington, Connecticut 06111

SCALE: AS NOTED
COMM. NO.: 62NE203/62NE403
DRAWN BY: P.M.C. DATE: 11/23/2010
APPROVED BY: S.A.P. DATE: 11/23/2010

NEWINGTON BULKY WASTE DISPOSAL AREA
MAIN STREET, NEWINGTON, CONNECTICUT

LANDFILL CLOSURE PLAN
SEDIMENTATION AND EROSION CONTROL
NOTES & DETAILS

Loureiro
Engineering • Construction • EH&S • Energy • Waste
DRAWING D-2
SHEET NO. 6 NO. OF SHEETS 7

G:\AUTOCAD\PROJECTS\62NE403\WWC SUBMISSION MAY 2015\62NE403-D01.DWG Tab: D-2 SESC Saved: 5/28/2015 11:58 AM Plotted: 5/28/2015 1:04 PM