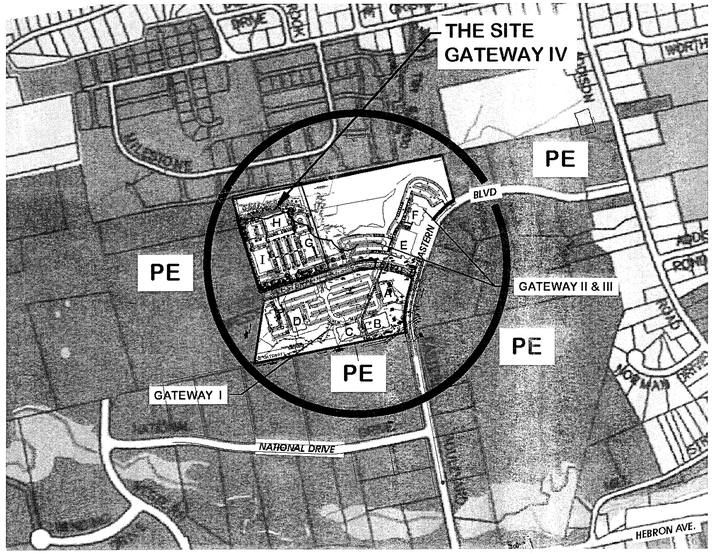

STREET LEGEND

IMPROVED ROADS
UNIMPROVED ROADS
PRIVATE ROADS

ZONE LEGEND

PLANNED AREA DEVELOPMENT
PLANNED BUSINESS & DEVELOPMENT
PLANNED TRAVEL
PLANNED INDUSTRIAL
PLANNED EMPLOYMENT — PE
PLANNED COMMERCE
CENTRAL DISTRICT
COUNTRY RESIDENCE
RURAL RESIDENCE — WHITE
RESIDENCE AAA
RESIDENCE AA
RESIDENCE A
RESERVED LAND
FLOOD ZONE

ZONING MAP

SCALE: 1"=500'

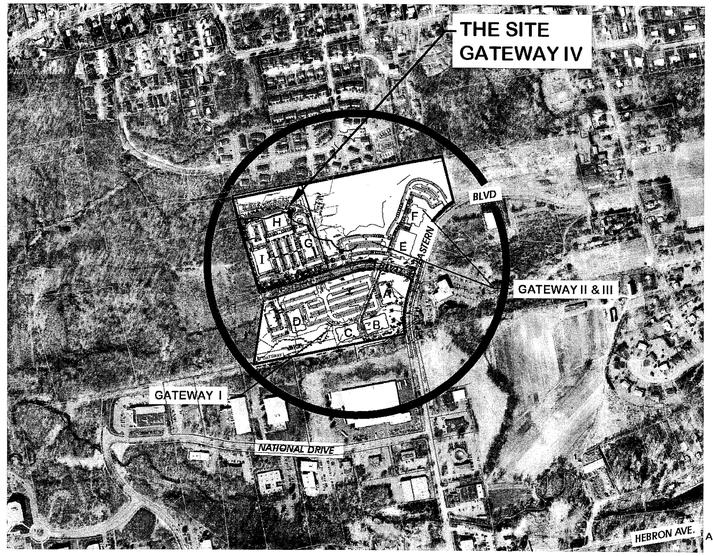

AERIAL PHOTO

1"=500'

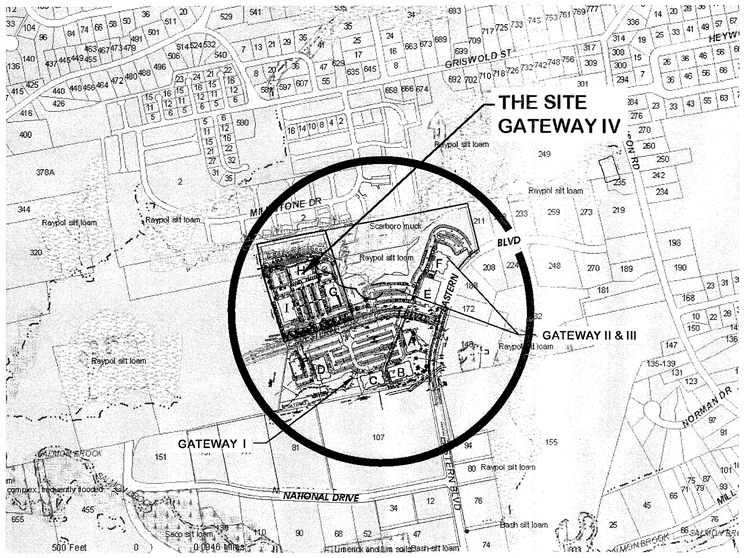

Wetland Soils
Conn Wetland

- Poorly drained soils
- Poorly drained and very poorly drained soils
- Somewhat poorly drained soils
- Soils on floodplain soils
- Water

WETLAND MAP

SCALE: 1"=500'

DRAWING LIST

	Sheet Number	Sheet Title
□ ○ ◆ ● ✶	✓ L-1	Cover Sheet
□	L-1a	Approval Resolutions
□	L-1b	Approval Resolutions
□ ○ ◆ ● ✶	✓ L-2	General Notes & Site Data
○ ◆ ● ✶	✓ L-2a	Context Plan
□ ○ ◆ ● ✶	✓ L-3	Grading Plan Full Development
□ ○ ◆ ● ✶	✓ L-3a	Phase 1 Grading Plan
□ ○ ◆	✓ L-4	Layout & Materials Plan Full Development
□ ○ ◆	✓ L-4a	Phase 1 Layout & Materials Plan
□ ○ ◆ ● ✶	✓ L-5	Planting Plan Full Development
□ ○ ◆ ● ✶	✓ L-5a	Phase 1 Planting Plan
□ ○ ◆ ● ✶	✓ L-5b	Plant Lists & Planting Details
□ ○ ◆ ● ✶	✓ L-6	Lighting Plan Full Development
□ ○ ◆ ● ✶	✓ L-6a	Phase 1 Lighting Plan
□ ○ ◆ ● ✶	✓ L-7	Erosion Control Plan Full Development
□ ○ ◆ ● ✶	L-7a	Phase 1 Erosion Control Plan
□ ○ ◆ ●	L-8.1	Erosion Control Details
□ ○ ◆ ●	L-8.2	Erosion Control Details
□ ○ ◆ ●	L-8.3	Erosion Control Notes
□ ○ ◆	L-9.1	Site Details
□ ○ ◆	L-9.2	Site Details
○ ◆	L-10	Test Hole Plan
○ ◆	L-10a	Existing Conditions
□ ○ ◆ ● ✶	✓ L-11	Utility Plan Full Development
□ ○ ◆ ●	L-11a	Phase 1 Utility Plan
□ ○ ◆	L-11b	Stormwater System Operations and Management Plan
□ ○	L-11c	Stormwater System Operations and Management Plan
□ ○ ◆	L-11d	Site Utility Details
□ ○ ◆	L-11e	Site Utility Details
○ ◆	L-11f	Site Utility Details
	L-11g	Site Utility Details
	L-11h	Site Utility Details
○	A-1	Floor Plan Building G
□ ○	A-2	Elevations Building G
□ ○	A-2.1	Elevations Building G
○	A-1	Floor Plan Building H
□ ○	A-2	Elevations Building H
○	A-1	Floor Plan Building I
□ ○	A-2	Elevations Building I
□ ○	A-2.1	Elevations Building I

✓ PLANS SUBMITTED 04/10/13
✶ PLANS SUBMITTED REVISED 06/17/13
● PLANS SUBMITTED 06/21/13 FOR WETLAND INFORMAL REVIEW
◆ PLANS SUBMITTED 07/11/13 FOR FORMAL WETLAND REVIEW
○ PLANS SUBMITTED 07/31/13 FOR FORMAL P&Z REVIEW
□ PLANS DATED 10/30/13 FOR MYLAR FILING

ABBREVIATIONS

AC.	ACRES
B&B	BALLED & BURLAPPED
BC	BOTTOM OF CURB
B.W.	BOTTOM OF WALL
CAL.	CALIPER
CB	CATCH BASIN
CMP	CORRUGATED METAL PIPE
DJ/CJ	DUMMY JOINT/CONTROL JOINT
EJ	EXPANSION JOINT
ELEV.	ELEVATION
F.F.E	FINISHED FLOOR ELEVATION
H.P.	HIGH POINT
HT.	HEIGHT
INV.	INVERT ELEVATION
K.E.	KNIFE EDGE CURB
L.F.	LOWER FLOOR
LF	LINEAR FEET
L.P.	LOW POINT
MH	MANHOLE
PVC	POLYVINYL CHLORIDE PIPE
R	RADIUS
RCP	REINFORCED CONCRETE PIPE
SF	SQUARE FEET
SPR.	SPREAD
TC	TOP OF CURB
T.F.	TOP OF FRAME
T.W.	TOP OF WALL
TYP	TYPICAL
U.F.	UPPER FLOOR
1ST FL.	1ST FLOOR ELEVATION
2ND FL.	2ND FLOOR ELEVATION

PROJECT LEGEND

EXISTING	PROPOSED
IRON PIN	SPOT ELEVATION 978.30+
CONCRETE MONUMENT	CONTOUR 977
PROPERTY LINE	FLOW ARROWS/SURFACE DRAINAGE
ABUTTING PROPERTY LINES	CONTRACT LIMIT LINE C.L.L.
EASEMENT LINE	DETAIL KEY A
	LAYOUT DIMENSION 24'
GROUND CONTOURS	RETAINING WALL
SPOT ELEVATION	FENCE
TREE LINE	HANDICAP SIGN
BUILDINGS	HANDICAP STRIPING
CONCRETE PAVEMENT	EDGE OF PAVEMENT WITH CURB
BITUMINOUS PAVEMENT	DUMPSTER ENCLOSURE D
BITUMINOUS CURB	DIRECTION ARROW
WETLAND FLAG W/NUMBER	LIGHT POLE LUMINAIRE
WETLANDS LIMIT	FOOTCANDLE INTENSITY AT GROUND LEVEL 1
BUFFER LIMIT	TREE
WATERCOURSE	SHRUB
STORM SEWERS	PLANTING LABEL GTI 1
SANITARY SEWER	TREELINE
WATER LINE	SILT FENCE
GAS LINE	HAYBALES
SOIL DELINEATION LINE	SILT SACK CATCH BASIN PROTECTION
	CATCH BASIN PROTECTION HAYBALES
	CONSTRUCTION ENTRANCE
	STONE CHECK DAM
	MANHOLE
	SETBACK LINE
	DEFERRED PARKING
	PARKING SPACES COUNT (20)
	TRANSFORMER T
	LOW EMITTING VEHICLE-PARKING SPACE DESIGNATION
	CAR POOL VEHICLE-PARKING SPACE DESIGNATION

STATE OF CONNECTICUT
PHILIP E. DOANE
No. 402
REGISTERED LANDSCAPE ARCHITECT

GATEWAY I EXPANSION / THE CASLE CORPORATION — PE - PLANNED EMPLOYMENT
PROJECT / APPLICANT — ZONE
300-310 & 320-330 WESTERN BOULEVARD
PROJECT ADDRESS
SPECIAL PERMIT SECTION — TPZ CHAIRMAN
DATE SPECIAL PERMIT APPD — DIRECTOR OF COMMUNITY DEVELOPMENT
FILE NO.

LADA, P.C. Land Planners
104 West Street, New Milford, CT 06776 (860) 681-4071
5060 Route 22 (Suite 109), Dover Plains, NY 12522 (845) 876-7424

JWM Architectural Group

DUTTON ASSOCIATES, LLC
LAND SURVEYORS AND CIVIL ENGINEERS
TEL: 860-824-8401 FAX: 860-824-8402

CLARK ENGINEERING
CIVIL ENGINEERING
26 BUSHY HILL ROAD, P.O. BOX 419
GRANBY, CT 06035-0419
TELE: (860) 653-4352
FAX: (860) 653-8415

FRESHWATER WETLAND SERVICES
P.O. BOX 233
GRANVILLE, MA 01034
TELE: (413) 695-2195
freshwaterwetland@gmail.com

Developer: THE CASLE CORPORATION
200 FISHER DRIVE
AVON, CONNECTICUT
DESIGN BUILDER
CASLE

Date	Description	No.
10/30/13	Mylar Filing	
07/31/13	ZONING	
07/11/13	WETLAND SUB	
06/21/13	WETLAND	

Revisions

Cover Sheet

Glastonbury Gateway IV

Western Boulevard Glastonbury, Connecticut

Project: 1972
Scale: AS SHOWN
Date: 04/10/13
Drawn by: CB
Checked by: PED
Drawing No.
L-1

O:\CP\PR\1972 casle gateway\ADWG\1972 Cover & Data Sheets.dwg L-1 Cover Sheet\richard\October 30, 2013

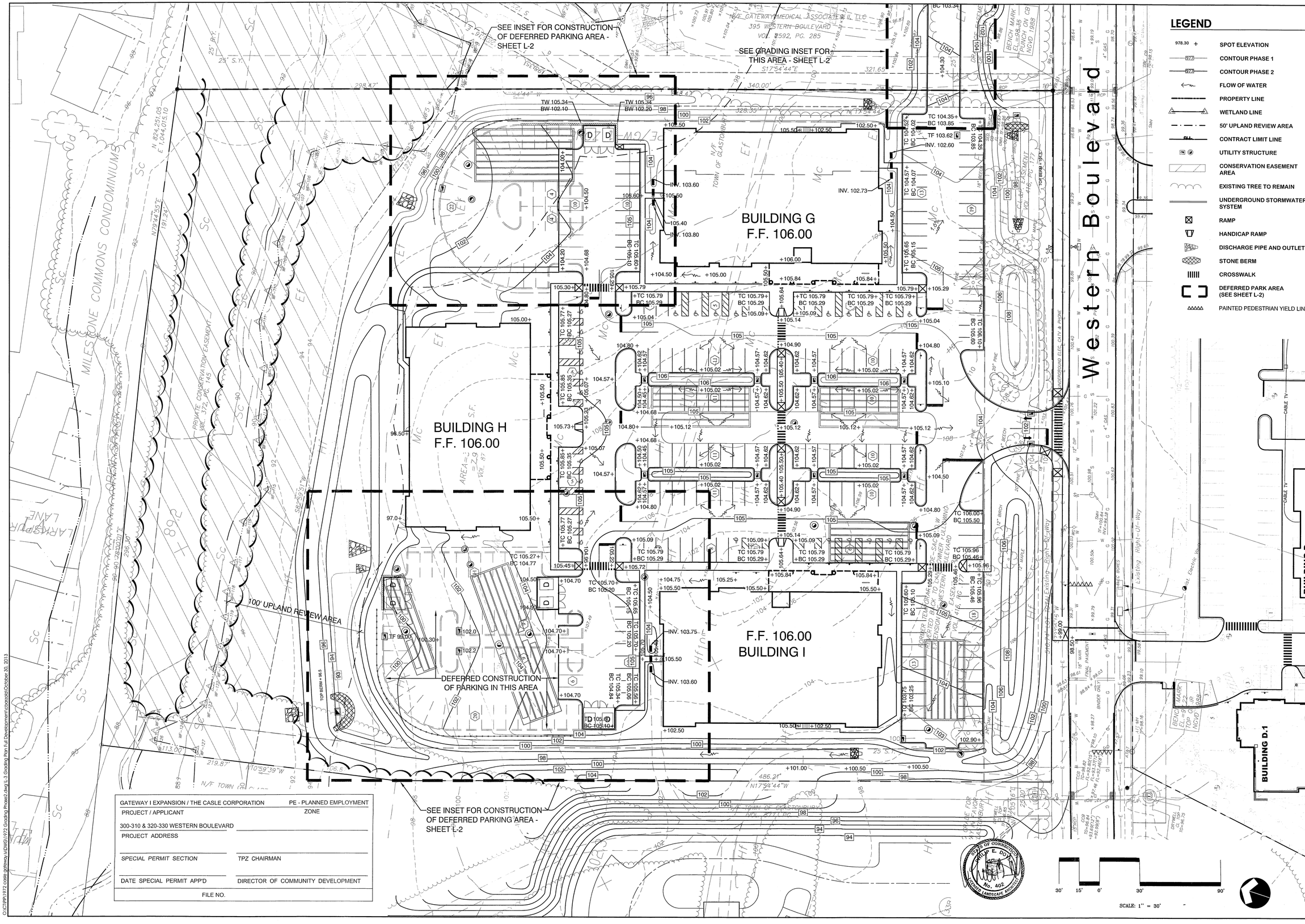

LEGEND

- 978.30 + SPOT ELEVATION
- CONTOUR PHASE 1
- CONTOUR PHASE 2
- FLOW OF WATER
- PROPERTY LINE
- WETLAND LINE
- 50' UPLAND REVIEW AREA
- CONTRACT LIMIT LINE
- UTILITY STRUCTURE
- CONSERVATION EASEMENT AREA
- EXISTING TREE TO REMAIN
- UNDERGROUND STORMWATER SYSTEM
- RAMP
- HANDICAP RAMP
- DISCHARGE PIPE AND OUTLET
- STONE BERM
- CROSSWALK
- DEFERRED PARK AREA (SEE SHEET L-2)
- PAINTED PEDESTRIAN YIELD LINE

GATEWAY I EXPANSION / THE CASLE CORPORATION	PE - PLANNED EMPLOYMENT
PROJECT / APPLICANT	ZONE
300-310 & 320-330 WESTERN BOULEVARD	
PROJECT ADDRESS	
SPECIAL PERMIT SECTION	TPZ CHAIRMAN
DATE SPECIAL PERMIT APP'D	DIRECTOR OF COMMUNITY DEVELOPMENT
FILE NO.	

LADA, P.C.
Land Planners
104 West Street
Simsbury, CT 06070 (860) 651-4971
2050 Route 22 (Suite 106)
Brewster, NY 10509 (845) 278-7424

JWM Architectural Group

DUTTON ASSOCIATES, LLC
LAND SURVEYORS AND CIVIL ENGINEERS
47 EASTERN BOULEVARD
GLASTONBURY, CONNECTICUT 06033
TEL: 860-633-3491 FAX: 860-633-8801
EMAIL: JWM@DUTTONASSOCIATES.COM

CLARK ENGINEERING
CIVIL ENGINEERING
26 BUSHY HILL ROAD, P.O. BOX 419
GRANBY, CT 06035-0419
TELE: (860) 653-4352
FAX: (860) 653-0415

FRESHWATER WETLAND SERVICES
P.O. BOX 233
GRANVILLE, MA 01034
TELE: (413) 695-2195
freshwaterwetland@gmail.com

THE CASLE CORPORATION
200 FISHER DRIVE
AVON, CONNECTICUT

DESIGN BUILDER

Developer: CASLE

Date	Description	No.
10/30/13	Mylar Filing	
07/31/13	ZONING	
07/11/13	WETLAND SUB	
06/21/13	WETLAND	

Revisions

Grading Plan Full Development

Glastonbury Gateway IV

Western Boulevard

Glastonbury, Connecticut

Project: 1972
Scale: 1"=30'
Date: 04/10/13
Drawn by: CB
Checked by: PED
Drawing No.
L-3

LEGEND

- 978.30 + — SPOT ELEVATION
- 977 — CONTOUR
- FLOW OF WATER
- PROPERTY LINE
- WETLAND LINE
- 50' UPLAND REVIEW AREA
- CLA — CONTRACT LIMIT LINE
- UTILITY STRUCTURE
- CONSERVATION EASEMENT AREA
- EXISTING TREE TO REMAIN
- UNDERGROUND STORMWATER SYSTEM
- RAMP
- HANDICAP RAMP
- DISCHARGE PIPE AND OUTLET
- STONE BERM
- CROSSWALK
- DEFERRED PARK AREA (SEE SHEET L-2)

EXPANSION AREA

BUILDING G
F.F. 106.00

Western Boulevard

MILESTONE COMMONS CONDOMINIUMS

PRIVATE CONSERVATION EASEMENT Vol. 372, PG. 145

LARKSPUR LANE

100' UPLAND REVIEW AREA

F.E. GATEWAY MEDICAL ASSOCIATES II, LLC
395 WESTERN BOULEVARD
VOL. 3592, PG. 285

DRAINAGE EASEMENT ON THE TOWN OF GLA VOL. 372, PG. 137

FORMER TEMPORARY CUL-DE-SAC R.O.W. REVERTED BACK TO LAND OWNER FOLLOWING EXTENSION OF WESTERN BOULEVARD

C.L.&P. EASEMENT VOL. 416, PG. 177

N/F TOWN OF GLASTONBURY MAP 87, PG. 86

AREA = 344,220 S.F. ± 7.9022 AC.

BENCH MARK EL. 98.35 PUNCH ON CB NGVD 1929

BUILDING D

BUILDING D.1

CABLE TV

GATEWAY I EXPANSION / THE CASLE CORPORATION	PE - PLANNED EMPLOYMENT
PROJECT / APPLICANT	ZONE
300-310 & 320-330 WESTERN BOULEVARD	
PROJECT ADDRESS	
SPECIAL PERMIT SECTION	TPZ CHAIRMAN
DATE SPECIAL PERMIT APP'D	DIRECTOR OF COMMUNITY DEVELOPMENT
FILE NO.	

STATE OF CONNECTICUT — PHILIP E. DOANE — No. 402 — LICENSED LANDSCAPE ARCHITECT

30' 15' 0' 30' 90'

SCALE: 1" = 30'

O:\CIVIL\1972 casle gateway\ LADWG\1972 Grading Phase1.dwg\ L-3a Phase 1 Grading Plan\corpcon\October 30, 2013

LADA, P.C.
Land Planners
101 Villard Street
Bloomfield, CT 06070 (860) 651-4971
2050 Route 22 (Suite 100)
Brewster, NY 10509 (845) 278-7424

JWM Architectural Group

DUTTON ASSOCIATES, LLC
LAND SURVEYORS AND CIVIL ENGINEERS
47 EASTON ROAD/MS
ELECTRONIC DIRECTOR: MAILS
TEL: 860-482-8467 FAX: 860-482-3880
EMAIL: JASON@THEDUTTONGROUP.COM

CLARK ENGINEERING
CIVIL ENGINEERING
26 BUSHY HILL ROAD, P.O. BOX 419
GRANBY, CT 06035-0419
TELE: (860) 653-4352
FAX: (860) 653-0415

FRESHWATER WETLAND SERVICES
P.O. BOX 253
GRANVILLE, MA 01034
TELE: (413) 695-2195
freshwaterwetland@gmail.com

Developer:
THE CASLE CORPORATION
200 FISHER DRIVE
AVON, CONNECTICUT

DESIGN BUILDER

CASLE

Date	Description	No.
10/30/13	Mylar Filing	
07/31/13	ZONING	
07/11/13	WETLAND SUB	
06/21/13	WETLAND	

Revisions

Phase 1 Grading Plan

Glastonbury Gateway IV

Western Boulevard — Glastonbury, Connecticut

Project: 1972
Scale: 1"=30'
Date: 04/10/13
Drawn by: CB
Checked by: PED
Drawing No.
L-3a

ENHANCEMENT / MITIGATION AREA NOTES:
THE CONTRACTOR WILL PROVIDE A SEPARATE PRICE FOR THE PLANTING TO BE INSTALLED IN THE ENHANCEMENT/MITIGATION AREA. THE ACTUAL AMOUNT OF PLANTS TO BE INSTALLED MAY VARY UP OR DOWN FROM WHAT IS SHOWN ON THE PLAN. DETERMINATION WILL BE MADE IN THE FIELD BY THE PROJECT LANDSCAPE ARCHITECT AND ENVIRONMENTAL PLANNER IN CONSULTATION WITH THE TOWN ENVIRONMENTAL PLANNER.

NOTE:
ALL PHASE 1, PHASE 2, ENHANCEMENT / MITIGATION AREA AND WATER QUALITY BASIN PLANTINGS ARE SHOWN ON THIS SHEET. SEE PLANT LISTS ON SHEET L-5b.

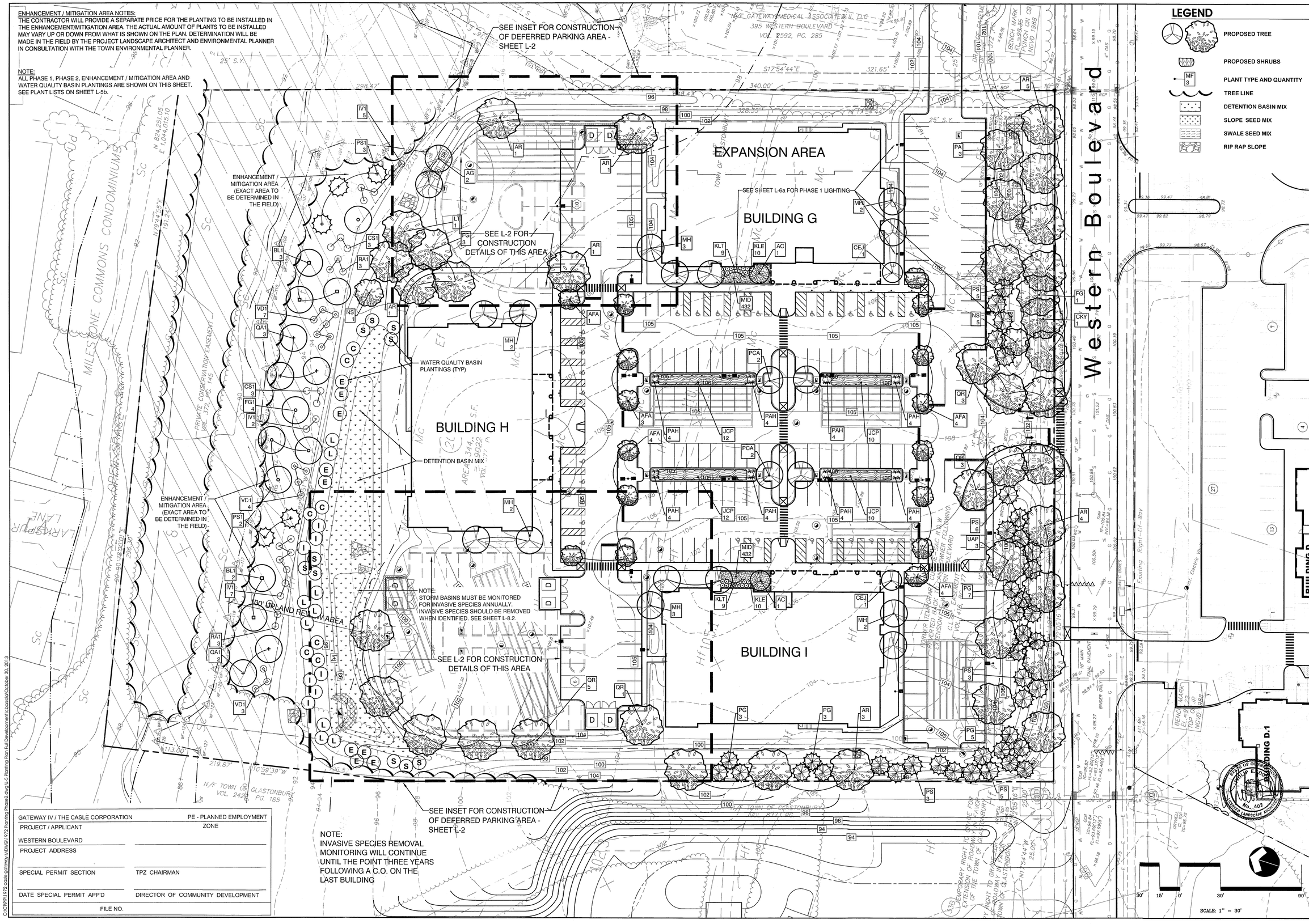

NOTE:
INVASIVE SPECIES REMOVAL MONITORING WILL CONTINUE UNTIL THE POINT THREE YEARS FOLLOWING A C.O. ON THE LAST BUILDING

LEGEND

- PROPOSED TREE
- PROPOSED SHRUBS
- PLANT TYPE AND QUANTITY
- TREE LINE
- DETENTION BASIN MIX
- SLOPE SEED MIX
- SWALE SEED MIX
- RIP RAP SLOPE

GATEWAY IV / THE CASLE CORPORATION	PE - PLANNED EMPLOYMENT
PROJECT / APPLICANT	ZONE
WESTERN BOULEVARD	
PROJECT ADDRESS	
SPECIAL PERMIT SECTION	TPZ CHAIRMAN
DATE SPECIAL PERMIT APP'D	DIRECTOR OF COMMUNITY DEVELOPMENT
FILE NO.	

LADA, P.C.
Land Planners
104 West Street
Simsbury, CT 06070 (860) 651-4971
2000 Route 22 (Suite 108)
Brewster, NY 10509 (845) 278-7424

JWM Architectural Group

DUTTON ASSOCIATES, LLC
LAND SURVEYORS AND CIVIL ENGINEERS
67 EASTON BOULEVARD
GLASTONBURY, CONNECTICUT 06033
TEL: 860-633-3449 FAX: 860-633-8801
EMAIL: JWM@DUTTONASSOCIATES.COM

CLARK ENGINEERING
CIVIL ENGINEERING
26 BUSHY HILL ROAD, P.O. BOX 419
GRANBY, CT 06035-0419
TELE: (860) 653-4352
FAX: (860) 653-0415

FRESHWATER WETLAND SERVICES
P.O. BOX 233
GRANVILLE, MA 01034
TELE: (413) 695-2195
freshwaterwetland@gmail.com

Developer:
THE CASLE CORPORATION
200 FISHER DRIVE
AVON, CONNECTICUT
DESIGN BUILDER
CASLE

Date	Description	No.
10/30/13	Mylar Filing	
07/31/13	ZONING	
07/11/13	WETLAND SUB	
06/21/13	WETLAND	

Revisions

Planting Plan Full Development

Glastonbury Gateway IV

Western Boulevard
Glastonbury, Connecticut

Project: 1972
Scale: 1"=30'
Date: 06/12/13
Drawn by: CB
Checked by: PED
Drawing No.
L-5

O:\CT\PP\1972 casle gateway iv\DWG\1972 Planting Phase2.dwg\L-5 Planting Plan Full Development\cbazola\October 30, 2013

PLANTING NOTE

PLACE TOPSOIL MIXTURE IN BOTTOM OF HOLE AND SATURATE. AFTER PLACING PLANT, WORK TOPSOIL MIXTURE CAREFULLY AROUND ROOT BALL AND THEN SATURATE. WHEN HOLE IS ONE HALF FULL OF MIXTURE, SATURATE AGAIN. FILL HOLE COMPLETELY WITH TOPSOIL MIXTURE AND SATURATE AGAIN.

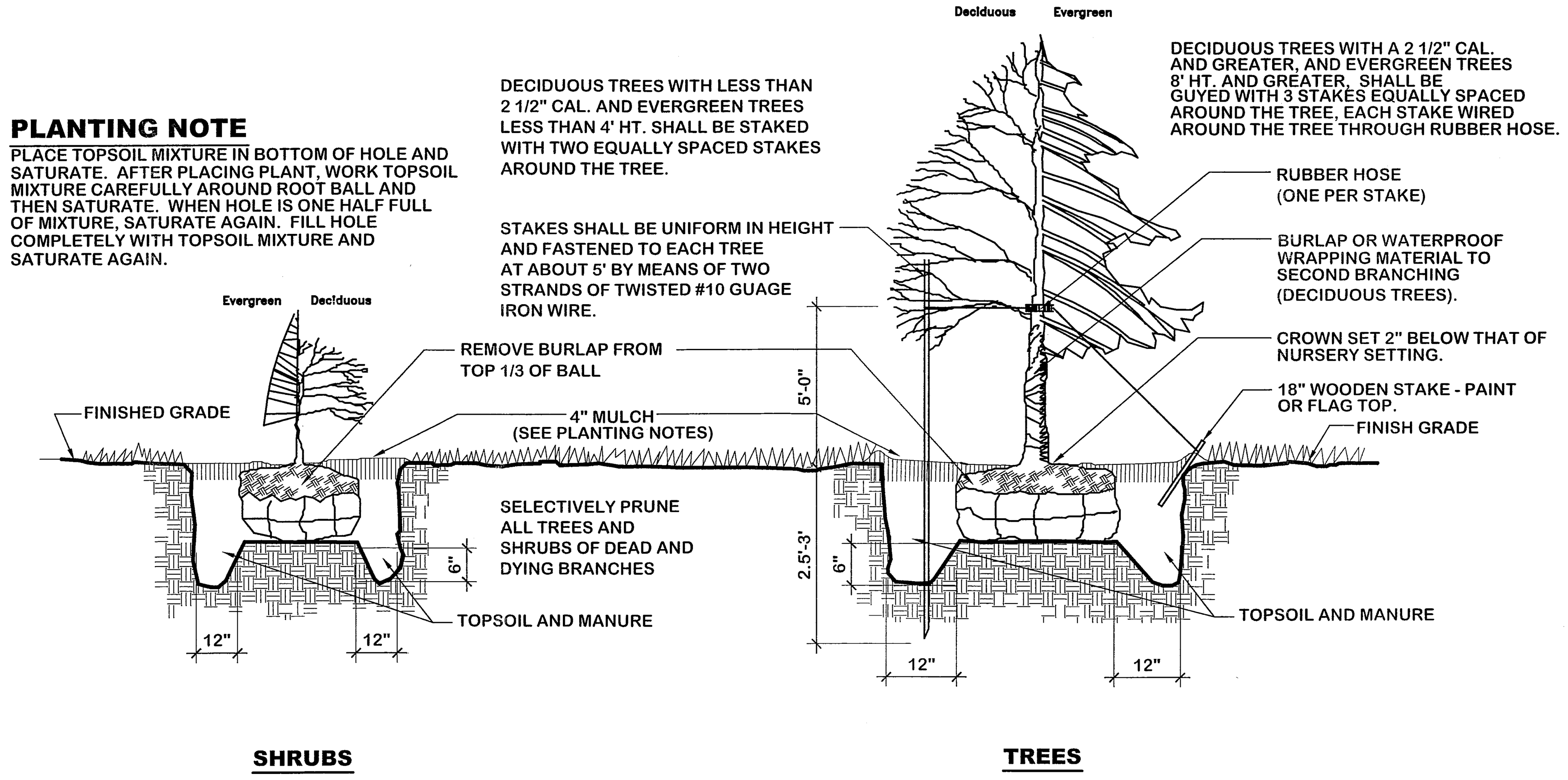

(31) **PLANTING DETAILS**
N.T.S.

SEEDING OPERATIONS

A. FERTILIZER AND LIMESTONE

CONTRACTOR SHALL CONDUCT APPROPRIATE SOIL TESTS TO DETERMINE AMOUNT OF FERTILIZER AND LIMESTONE REQUIRED TO ENSURE AN ACCEPTABLE LAWN.

GROUND LIMESTONE: 100LBS/1000S.F.
COMMERCIAL FERTILIZER: * 20LBS/1000S.F.

*PERCENTAGES OF NITROGEN, PHOSPHORIC ACID AND POTASH TO BE DETERMINED BY SOIL TESTS.

B. LAWN SEED

SEED MIXTURE FOR:
LATE SUMMER / EARLY FALL / EARLY SPRING PLANTING. SOW AT RATE OF 4 LBS/1000 S.F.

CREEPING RED FESCUE	35 PARTS
CHEWINGS RED FESCUE	20 PARTS
KENTUCKY 31 TALL FESCUE	15 PARTS
ROUGH BLUEGRASS	10 PARTS
BARON BLUEGRASS	20 PARTS

SEED MIXTURE FOR PLANTING MAY 1 TO LATE SUMMER. SOW AT A RATE OF 6 LBS/1000 S.F.

CREEPING RED FESCUE	35 PARTS
CHEWINGS RED FESCUE	20 PARTS
KENTUCKY 31 TALL FESCUE	20 PARTS
DOMESTIC RYEGRASS	25 PARTS

C. WETLAND SEED

APPLY "WETLAND SEED MIXTURE" PREPARED BY NEW ENGLAND WETLAND PLANTS, INC., AMHERST, MA. AT A RATE OF ONE POUND PER 2,500 S.F. (413) 256-1752

D. LAWN SEED (SLOPE MIX)

SOW AT RATE OF 6 LBS/1000 S.F.

CREEPING RED FESCUE	42 PARTS
FIESTA II PERENNIAL RYEGRASS	34 PARTS
RED TOP	8 PARTS
ALSIKE CLOVER	8 PARTS
BIRDSFOOT TREFOIL	8 PARTS

E. DETENTION BASIN

USE "WETLAND SEED MIXTURE" FROM NEW ENGLAND WETLAND PLANTS, INC. [(413) 256-1752] AT A RATE OF ONE POUND PER 2,500 S.F. OR "RETENTION BASIN FLOOR SEED" FROM NEW ENGLAND SEED CO. AT A RATE OF 2 LB./1000 S.F. MIX WITH ANNUAL RYEGRASS AT A RATE OF 1/2 LB./1000 S.F.

F. MEADOW MIX

USE NEW ENGLAND SEED CO. "NEW ENGLAND HORSE PASTURE MIXTURE" AT A RATE OF 100 LB./ACRE. MIX WITH VERMONT WILDFLOWER FARM [(802) 425-3500] DROUGHT TOLERANT PERENNIAL MIX AT A RATE OF 51 LB./ACRE. MIX WITH 20% ADDITIONAL COMMON TALL FESCUE.

R1-5

DOUBLE FACE

R1-6a

(42) **PEDESTRIAN CROSSWALK SIGN** MUTCD SECT. 2B.11, 2B.12 & 3B.18
N.T.S.

(43) **PEDESTRIAN CROSSING SIGN WITH WEIGHTED BASE** MUTCD SECT. 2B.11, 2B.12 & 3B.18
N.T.S.

Phase 1 Tree List

Sym.	Quan.	Botanical Name	Common Name	Size	Root
AC	2	AMELANCHIER CANADENSIS	DOWNY SHADBLOW	6ft.-7ft. Ht.	B&B
AFA	7	ACER X FREEMANII AUTUMN BLAZE	AUTUMN BLAZE RED MAPLE	2in.-2 1/2in. DBH	B&B
AR	5	ACER RUBRUM 'OCTOBER GLORY'	OCTOBER GLORY RED MAPLE	2in.-2 1/2in. DBH	B&B
CEJ	1	CERCIDIPHYLLUM JAPANICUM	KATSURA TREE	2in.-2 1/2in. DBH	B&B
CKY	1	CLADRASTIS KENTUKEA	YELLOW WOOD	2in.-2 1/2in. DBH	B&B
FG	1	FAGUS GRANDIFOLIA	AMERICAN BEECH	2in.-2 1/2in. DBH	B&B
MH	5	MALUS HUPEHENSIS	TEA CRABAPPLE	2in.-2 1/2in. DBH	B&B
NS	1	NYSSA SYLVATICA	BLACK TUPELO	2in.-2 1/2in. DBH	B&B
PCA	2	PYRUS CALLERYANA 'ARISTOCRAT'	BRADFORD PEAR	2in.-2 1/2in. DBH	B&B
PS	5	PINUS STROBUS	WHITE PINE	5ft.-6ft. Ht.	B&B
QR	3	QUERCUS RUBRA	RED OAK	2in.-2 1/2in. DBH	B&B
UAP	3	ULMUS AMERICANA 'PRINCETON'	PRINCETON ELM	2in.-2 1/2in. DBH	B&B

Phase 1 Shrub List

Sym.	Quan.	Botanical Name	Common Name	Size	Root
JCP	22	JUNIPERUS CHIN. 'PFITZ. COMPACTA'	COMPACT PFITZER JUNIPER	24in.-30in. Ht.	CONT.
KLE	10	KALMIA LATIFOLIA F. MYRTIFOLIA 'ELF'	ELF MOUNTAIN LAUREL	#5 POT	CONT.
KLT	9	KALMIA LATIFOLIA F. MYRTIFOLIA 'TIDDLYWINKS'	TIDDLYWINKS MOUNTAIN LAUREL	#5 POT	CONT.

Phase 1 Ground Cover & Perennials

Sym.	Quan.	Botanical Name	Common Name	Size	Root
MID	432	MICROBIOTA DECUSSATA	SIBERIAN CARPET CYPRESS	#5 POT	CONT.
PAH	16	PENNISETUM ALOPECUROIDES 'HAMELN'	DWARF FOUNTAIN GRASS	#2 POT	CONT.

Enhancement / Mitigation Area Tree List

Sym.	Quan.	Botanical Name	Common Name	Size	Root
BL1	5	BETULA LENTA	BLACK BIRCH	4ft.-6ft. Ht.	B&B
FG1	5	FAGUS GRANDIFOLIA	AMERICAN BEECH	4ft.-6ft. Ht.	B&B
PS1	5	PINUS STROBUS	WHITE PINE	4ft.-6ft. Ht.	B&B
QA1	5	QUERCUS ALBA	WHITE OAK	2-2 1/2in. Cal.	B&B

Enhancement / Mitigation Area Shrub List

Sym.	Quan.	Botanical Name	Common Name	Size	Root
CS1	6	CORNUS SERICEA	RED-OSIER DOGWOOD	#7 Pot	CONT.
IV1	14	ILEX VERTICILLATA	WINTERBERRY HOLLY	#5 Pot	CONT.
RA1	6	RUBUS ALLEGHENIENSIS	BLACK RASPBERRY		CONT.
VD1	14	VIBURNUM DENTATUM	ARROWWOOD VIBURNUM	3-4ft. Ht.	B&B

ENHANCEMENT / MITIGATION AREA NOTES:
THE CONTRACTOR WILL PROVIDE A SEPARATE PRICE FOR THE PLANTING TO BE INSTALLED IN THE ENHANCEMENT/MITIGATION AREA. THE ACTUAL AMOUNT OF PLANTS TO BE INSTALLED MAY VARY UP OR DOWN FROM WHAT IS SHOWN ON THE PLAN. DETERMINATION WILL BE MADE IN THE FIELD BY THE PROJECT LANDSCAPE ARCHITECT AND ENVIRONMENTAL PLANNER IN CONSULTATION WITH THE TOWN ENVIRONMENTAL PLANNER.

Phase 2 Tree List

Sym.	Quan.	Botanical Name	Common Name	Size	Root
AC	2	AMELANCHIER CANADENSIS	DOWNY SHADBLOW	6ft.-7ft. Ht.	B&B
AFA	7	ACER X FREEMANII AUTUMN BLAZE	AUTUMN BLAZE RED MAPLE	2in.-2 1/2in. DBH	B&B
AG	2	ACER GRISEUM	PAPERBARK MAPLE	2in.-2 1/2in. DBH	B&B
AR	11	ACER RUBRUM 'OCTOBER GLORY'	OCTOBER GLORY RED MAPLE	2in.-2 1/2in. DBH	B&B
CEJ	1	CERCIDIPHYLLUM JAPANICUM	KATSURA TREE	2in.-2 1/2in. DBH	B&B
CKY	1	CLADRASTIS KENTUKEA	YELLOW WOOD	2in.-2 1/2in. DBH	B&B
FG	3	FAGUS GRANDIFOLIA	AMERICAN BEECH	2in.-2 1/2in. DBH	B&B
LT	1	LIRIODENDRON TULIPIFERA	TULIPTREE	2in.-2 1/2in. DBH	B&B
MH	9	MALUS HUPEHENSIS	TEA CRABAPPLE	2in.-3 1/2in. DBH	B&B
NS	1	NYSSA SYLVATICA	BLACK TUPELO	2in.-2 1/2in. DBH	B&B
PCA	2	PYRUS CALLERYANA 'ARISTOCRAT'	BRADFORD PEAR	2in.-2 1/2in. DBH	B&B
PG	18	PICEA GLAUCA	WHITE SPRUCE	8ft.-10ft. Ht.	B&B
PS	17	PINUS STROBUS	WHITE PINE	5ft.-6ft. Ht.	B&B
QR	9	QUERCUS RUBRA	RED OAK	2in.-2 1/2in. DBH	B&B
UAP	3	ULMUS AMERICANA 'PRINCETON'	PRINCETON ELM	2in.-2 1/2in. DBH	B&B

Phase 2 Shrub List

Sym.	Quan.	Botanical Name	Common Name	Size	Root
JCP	22	JUNIPERUS CHIN. 'PFITZ. COMPACTA'	COMPACT PFITZER JUNIPER	24in.-30in. Ht.	CONT.
KLE	10	KALMIA LATIFOLIA F. MYRTIFOLIA 'ELF'	ELF MOUNTAIN LAUREL	#5 POT	CONT.
KLT	9	KALMIA LATIFOLIA F. MYRTIFOLIA 'TIDDLYWINKS'	TIDDLYWINKS MOUNTAIN LAUREL	#5 POT	CONT.

Phase 2 Ground Cover & Perennials

Sym.	Quan.	Botanical Name	Common Name	Size	Root
MID	432	MICROBIOTA DECUSSATA	SIBERIAN CARPET CYPRESS	#5 POT	CONT.
PAH	16	PENNISETUM ALOPECUROIDES 'HAMELN'	DWARF FOUNTAIN GRASS	#2 POT	CONT.

Water Quality Basin Plantings

Sym.	Quan.	Botanical Name	Common Name	Size	Root
C	7	CORNUS AMOMUM	SILKY DOGWOOD	3ft.-4ft. Ht.	CONT.
I	7	ILEX VERTICILLATA	WINTERBERRY HOLLY	3ft.-4ft. Ht.	CONT.
L	9	LINDERA BENZOIN	SPICEBUSH	3ft.-4ft. Ht.	CONT.
E	9	SAMBUCUS CANADENSIS	ELDERBERRY	3ft.-4ft. Ht.	CONT.
S	10	SPIREA LATIFOLIA	MEADOWSWEET	2ft.-3ft. Ht.	CONT.

PLANT LIST NOTES:

1. THE CONTRACTOR IS RESPONSIBLE FOR VERIFYING PLANT QUANTITIES BY COUNT ON THE PLAN. IF THERE IS A DISCREPANCY BETWEEN THE PLAN AND THE PLANT LIST, THE PLAN WILL PREVAIL.
2. SUBSTITUTIONS ARE ALLOWED DUE TO AVAILABILITY AND HEALTH OF PLANTS. ALL SUBSTITUTIONS SHALL BE APPROVED BY PROJECT LANDSCAPE ARCHITECT.
3. ALL PLANTS TO BE NURSERY STOCK.
4. ALL SHRUBS AND PERENNIALS TO BE INSTALLED IN PLANT BED WITH 4" PINE BARK MULCH. PROVIDE SHOVEL EDGE ON BED.
5. DO NOT OVER MULCH TREE PLANTING. USE ONLY PINE BARK MULCH.
6. ALL MATERIAL - PLANTS, SOIL, GROWING MEDIUM-MUST BE FREE OF INVASIVE SPECIES - ESPECIALLY PURPLE LOOSESTRIFE.

PLANT LIST NOTES
N.T.S.

GATEWAY IV / THE CASLE CORPORATION	PE - PLANNED EMPLOYMENT
PROJECT / APPLICANT	ZONE
WESTERN BOULEVARD	
PROJECT ADDRESS	
SPECIAL PERMIT SECTION	TPZ CHAIRMAN
DATE SPECIAL PERMIT APP'D	DIRECTOR OF COMMUNITY DEVELOPMENT
FILE NO.	

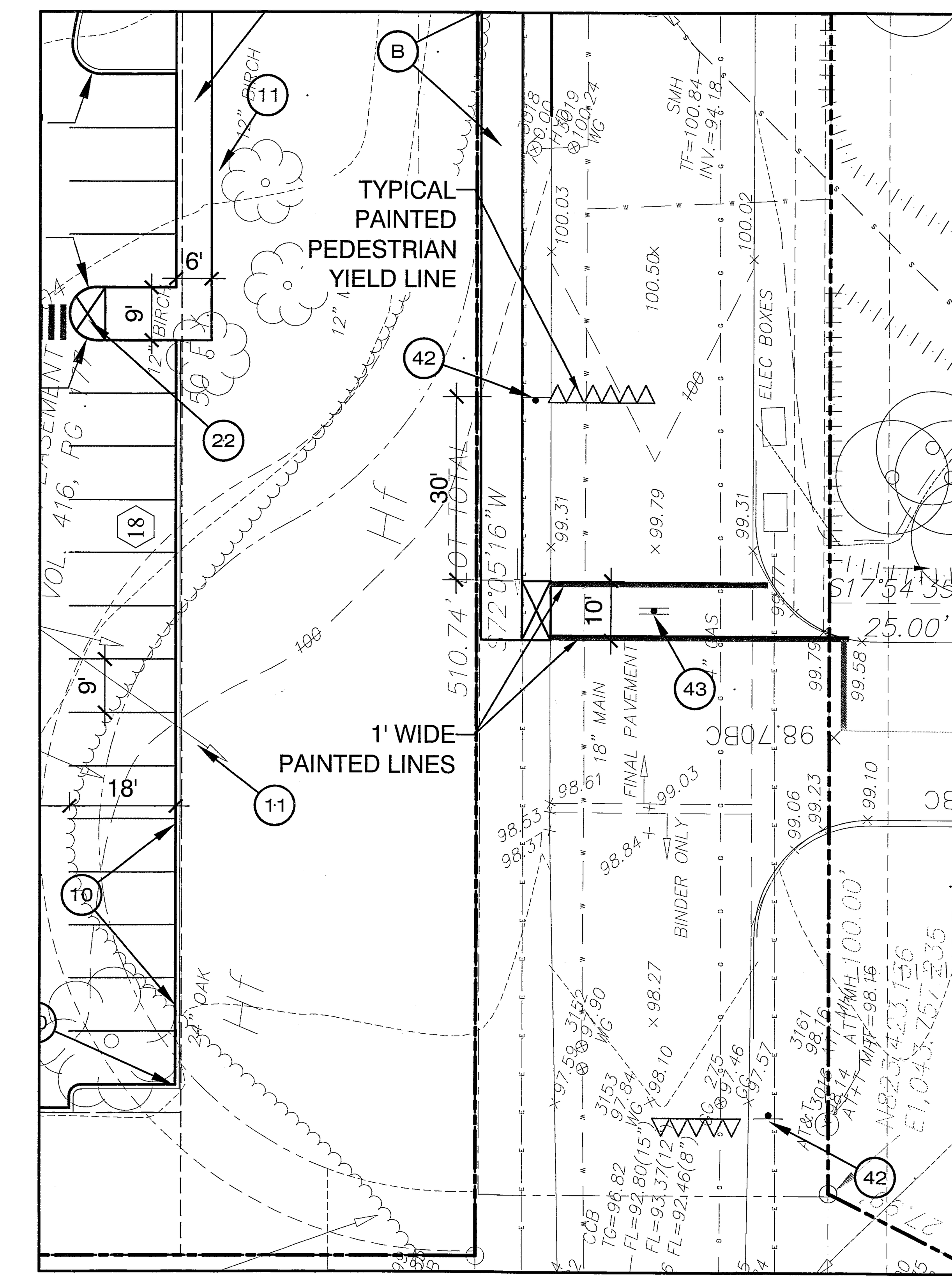

MIDBLOCK PEDESTRIAN CROSSING
SCALE: 1"=20'

LADA, P.C. Land Planners
104 West Street Simsbury, CT 06070 (860) 651-4971
2050 Route 22 (Suite 106) Brewster, NY 10509 (845) 278-7424

JWM Architectural Group

DUTTON ASSOCIATES, LLC
LAND SURVEYORS AND CIVIL ENGINEERS
67 EASTERN BOULEVARD GLASTONBURY, CONNECTICUT 06033
TEL: 860-633-9401 FAX: 860-633-8851
EMAIL: JMD@DUTTONASSOCIATESLLC.COM

CLARK ENGINEERING
CIVIL ENGINEERING
26 BUSHY HILL ROAD, P.O. BOX 419
GRANBY, CT 06035-0419
TELE: (860) 653-4352
FAX: (860) 653-0415

FRESHWATER WETLAND SERVICES
P.O. BOX 233
GRANVILLE, MA 01034
TELE: (413) 695-2195
freshwaterwetland@gmail.com

Developer: THE CASLE CORPORATION
200 FISHER DRIVE
AVON, CONNECTICUT
DESIGN BUILDER
CASLE

Date	Description	No.
10/30/13	Mylar Filing	
07/31/13	ZONING	
07/11/13	WETLAND SUB	
06/21/13	WETLAND	

Revisions

Plant Lists & Planting Details

Glastonbury Gateway IV

Western Boulevard
Glastonbury, Connecticut

STATE OF CONNECTICUT PHILIP E. DOYLE No. 402 LICENSED LANDSCAPE ARCHITECT

Project: 1972
Scale: 1"=30'
Date: 06/12/13
Drawn by: CB
Checked by: PED
Drawing No.
L-5b

O:\CT\P\P\1972 casle gateway iv\DWG\1972 Plant List & Details.dwg \L-5b Plant Lists & Planting Details\cbarzola\October 30, 2013

USE TEMPORARY OUTLETS TO DIRECT WATER FROM ALL TST'S

SEE INSET FOR CONSTRUCTION OF DEFERRED PARKING AREA - SHEET L-2

SEE INSET FOR THIS AREA - SHEET L-2

TEMPORARY CHECK DAMS - LOCATION MAY CHANGE DURING CONSTRUCTION

NOTE:
USE TEMPORARY STABILIZATION MEASURES IF NECESSARY, TO MAINTAIN SLOPES DURING CONSTRUCTION, INCLUDING BUT NOT LIMITED TO TEMPORARY SEEDING, SOD, SLOPE NETTING, STONE BLANKET, ETC.

EXPANSION AREA

BUILDING G
PHASE 1 CONSTRUCTED

CB PROTECTION (XIV)

TST

AS FILLS ARE MADE WATER IS TO BE DIRECTED INTO SITE.

TEMPORARY CHECK DAMS - LOCATION MAY CHANGE DURING CONSTRUCTION (VII)

BUILDING H

SILT FENCE AND HAYBALES (III)

TST

CB PROTECTION (XIV)

100' UPLAND REVIEW AREA

TEMPORARY DISCHARGE OUTLET

TST

BUILDING I

AS FILLS ARE MADE WATER IS TO BE DIRECTED INTO SITE AS OPPOSED TO OVER SLOPE

TEMPORARY SEDIMENT TRAP (XVIII)

SILT FENCE AND HAYBALES (III)

SEE INSET FOR CONSTRUCTION NG AREA -

TEMPORARY CHECK DAMS - LOCATION MAY CHANGE DURING CONSTRUCTION (VII)

CB PROTECTION (XIV)

CONSTRUCTION ENTRANCE (II)

STOCKPILE AREA

BUILDING D.1

Western Boulevard

LEGEND

- SILT FENCE
- HAYBALES
- SILT SACK CATCH BASIN PROTECTION
- CONSTRUCTION ENTRANCE
- CATCH BASIN PROTECTION HAYBALES
- STOCKPILE AREA
- TREE PROTECTION
- STONE CHECK DAM
- TEMPORARY SEDIMENT TRAP
- DETAIL REFERENCE NUMBER (XIV)

CONSTRUCTION SEQUENCE:

1. FLAG THE LIMITS OF CONSTRUCTION AND THE TREE PROTECTION ZONES FOR THE ENTIRE PROJECT SITE.
2. INSTALL THE PERIMETER EROSION AND SEDIMENT CONTROLS AND THE CONSTRUCTION ENTRANCE.
3. CUT TREES WITHIN THE CLEARING LIMITS AND REMOVE THE CUT WOOD. CHIP & STOCKPILE BRUSH AND SLASH. REMOVE BRUSH AND SLASH FROM SITE.
4. BUILD OUTLET AND BERMS FOR BASIN. MODIFY FOR USE AS A TEMPORARY SEDIMENT TRAPS. AFTER THE BASIN OUTLETS ARE INSTALLED, REMOVE THE PORTION OR THE SILT FENCE THAT IS ACROSS THE OUTLET AND REPLACE WITH A ROCK FILTER.
5. STRIP AND STOCKPILE THE EXISTING TOPSOIL AND OTHER SURPLUS MATERIAL. STABILIZE THE STOCKPILE(S).
6. CONSTRUCT TEMPORARY SWALES TO DETENTION BASINS.
7. MAKE ALL CUTS AND FILLS REQUIRED. ESTABLISH THE SUBGRADE FOR THE TOPSOIL AREAS, PARKING AND ROADWAYS. BENCH THE BUILDING AREAS AS REQUIRED. STABILIZE THE SLOPES. BEGIN CONSTRUCTION OF BUILDINGS "H" & "I".
8. INSTALL THE UTILITIES INCLUDING STORM SEWER, WATER LINES, AND UNDERGROUND CABLES. PROTECT ALL UTILITY STRUCTURES FROM SEDIMENT INTRUSION. INSTALL TEMPORARY SEDIMENT TRAPS AT CB'S AND ELSEWHERE AS SHOWN.
9. PREPARE THE SUB BASE, SLOPES, PARKING AREAS, SHOULDER AREAS, ACCESS ROADS AND ANY OTHER AREA OF DISTURBANCE FOR FINAL GRADING.
10. INSTALL PAVEMENT BASE MATERIAL.
11. COMPLETE THE BUILDING, THEN THE BALANCE OF THE SITE WORK AND STABILIZATION OF DISTURBED AREAS. INSTALL FIRST COURSE OF PAVEMENT.
12. PLACE TOPSOIL & INSTALL PERIMETER LANDSCAPE MATERIALS.
13. REMOVE THE TEMPORARY SEDIMENT TRAP PORTION OF THE DETENTION BASIN AND CLEAN THE BASIN OF ANY ACCUMULATED SEDIMENT. COMPLETE THE GRADING OF THE BASIN. INSTALL THE FINAL PLANTINGS AND LANDSCAPING. SOD BOTTOM OF BASIN.
14. INSPECT THE DRAINAGE SYSTEM AND CLEAN AS NEEDED. SWEEP PAVED AREAS.
15. AFTER FINAL STABILIZATION OF THE SITE, REMOVE ALL SILT FENCE AND OTHER SEDIMENT BARRIERS, AND RESTORE ANY REMAINING DISTURBED AREAS.

GATEWAY I EXPANSION / THE CASLE CORPORATION	PE - PLANNED EMPLOYMENT
PROJECT / APPLICANT	ZONE
300-310 & 320-330 WESTERN BOULEVARD	
PROJECT ADDRESS	
SPECIAL PERMIT SECTION	TPZ CHAIRMAN
DATE SPECIAL PERMIT APP'D	DIRECTOR OF COMMUNITY DEVELOPMENT
FILE NO.	

STATE OF CONNECTICUT — PHILIP E. DOANE — No. 402 — LICENSED LANDSCAPE ARCHITECT

30' 15' 0' 30' 90'

SCALE: 1" = 30'

LADA, P.C.
Land Planners
104 West Street
Simsbury, CT 06070 (860) 651-4071
2060 Route 22 (Suite 106)
Brewster, NY 10509 (845) 278-7404

JWM Architectural Group

DUTTON ASSOCIATES, LLC
LAND SURVEYORS AND CIVIL ENGINEERS
67 EASTERN BOULEVARD
GLASTONBURY, CONNECTICUT 06033
TEL: 860-633-4647 FAX: 860-633-3660
EMAIL: JAUMELY@DUTTON-ASSOC.COM

CLARK ENGINEERING
CIVIL ENGINEERING
26 BUSHY HILL ROAD, P.O. BOX 419
GRANBY, CT 06035-0419
TELE: (860) 653-4352
FAX: (860) 653-9415

FRESHWATER WETLAND SERVICES
P.O. BOX 233
GRANVILLE, MA 01034
TELE: (413) 569-2195
freshwaterwetland@gmail.com

Developer:
THE CASLE CORPORATION
200 FISHER DRIVE
AVON, CONNECTICUT
DESIGN BUILDER
CASLE

Date	Description	No.
	Revisions	
10/30/13	Mylar Filing	
07/31/13	ZONING	
07/11/13	WETLAND SUB	
06/21/13	WETLAND	

Erosion Control Plan Full Development

Glastonbury Gateway IV

Western Boulevard — Glastonbury, Connecticut

Project: 1972
Scale: 1"=30'
Date: 04/10/13
Drawn by: CB
Checked by: PED
Drawing No.

L-7

O:\CTP\P\1972 casle gateway IV\DWG\1972 Erosion Control Phase2.dwg lu:7 Erosion Control Plan Full Development\cbcorpio\October 30, 2013

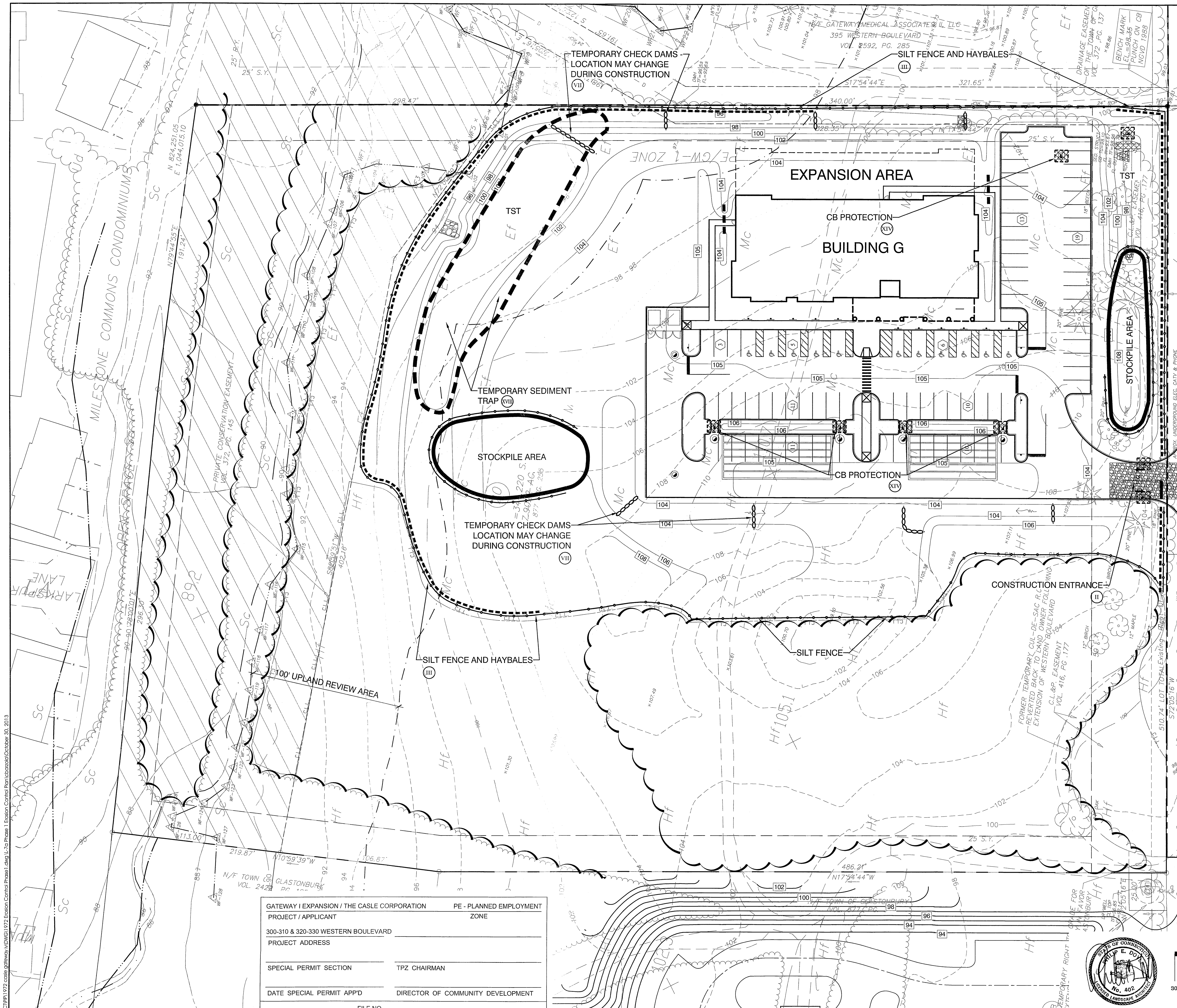

LEGEND

- SILT FENCE
- HAYBALES
- SILT SACK CATCH BASIN PROTECTION
- CONSTRUCTION ENTRANCE
- CATCH BASIN PROTECTION HAYBALES
- STOCKPILE AREA
- TREE PROTECTION
- STONE CHECK DAM
- TEMPORARY SEDIMENT TRAP
- DETAIL REFERENCE NUMBER

CONSTRUCTION SEQUENCE:

1. FLAG THE LIMITS OF CONSTRUCTION AND THE TREE PROTECTION ZONES FOR THE PHASE 1 PROJECT SITE.
2. INSTALL THE PERIMETER EROSION AND SEDIMENT CONTROLS AND THE CONSTRUCTION ENTRANCE.
3. CUT TREES WITHIN THE CLEARING LIMITS AND REMOVE THE CUT WOOD. CHIP & STOCKPILE BRUSH AND SLASH. REMOVE BRUSH AND SLASH FROM SITE.
4. BUILD OUTLET AND BERMS FOR BASIN. MODIFY FOR USE AS A TEMPORARY SEDIMENT TRAP. AFTER THE BASIN OUTLETS ARE INSTALLED, REMOVE THE PORTION OR THE SILT FENCE THAT IS ACROSS THE OUTLET AND REPLACE WITH A ROCK FILTER.
5. STRIP AND STOCKPILE THE EXISTING TOPSOIL AND OTHER SURPLUS MATERIAL. STABILIZE THE STOCKPILE(S).
6. CONSTRUCT TEMPORARY SWALES TO DETENTION BASINS.
7. MAKE ALL CUTS AND FILLS REQUIRED. ESTABLISH THE SUBGRADE FOR THE TOPSOIL AREAS, PARKING AND ROADWAYS. BENCH THE BUILDING AREAS AS REQUIRED. STABILIZE THE SLOPES. BEGIN CONSTRUCTION OF BUILDING G.
8. INSTALL THE UTILITIES INCLUDING STORM SEWER, WATER LINES, AND UNDERGROUND CABLES. PROTECT ALL UTILITY STRUCTURES FROM SEDIMENT INTRUSION. INSTALL TEMPORARY SEDIMENT TRAPS AT CB'S AND ELSEWHERE AS SHOWN.
9. PREPARE THE SUB BASE, SLOPES, PARKING AREAS, SHOULDER AREAS, ACCESS ROADS AND ANY OTHER AREA OF DISTURBANCE FOR FINAL GRADING.
10. INSTALL PAVEMENT BASE MATERIAL.
11. COMPLETE THE BUILDING, THEN THE BALANCE OF THE SITE WORK AND STABILIZATION OF DISTURBED AREAS. INSTALL FIRST COURSE OF PAVEMENT.
12. PLACE TOPSOIL & INSTALL PERIMETER LANDSCAPE MATERIALS.
13. REMOVE THE TEMPORARY SEDIMENT TRAP PORTION OF THE DETENTION BASIN AND CLEAN THE BASIN OF ANY ACCUMULATED SEDIMENT. COMPLETE THE GRADING OF THE BASIN. INSTALL THE FINAL PLANTINGS AND LANDSCAPING, SOD BOTTOM OF BASIN.
14. NSPECT THE DRAINAGE SYSTEM AND CLEAN AS NEEDED. SWEEP PAVED AREAS.
15. FTER FINAL STABILIZATION OF THE SITE, REMOVE ALL SILT FENCE AND OTHER SEDIMENT BARRIERS, AND RESTORE ANY REMAININGDISTURBED AREAS.

GATEWAY I EXPANSION / THE CASLE CORPORATION	PE - PLANNED EMPLOYMENT
PROJECT / APPLICANT	ZONE
300-310 & 320-330 WESTERN BOULEVARD	
PROJECT ADDRESS	
SPECIAL PERMIT SECTION	TPZ CHAIRMAN
DATE SPECIAL PERMIT APP'D	DIRECTOR OF COMMUNITY DEVELOPMENT
FILE NO.	

SCALE: 1" = 30'

30' 15' 0' 30' 90'

STATE OF CONNECTICUT PHILIP E. DOYLE No. 402 LICENSED LANDSCAPE ARCHITECT

LADA, P.C. Land Planners
104 West Street Simsbury, CT 06070 (860) 651-4971
2050 Route 22 (Suite 106) Brewster, NY 10509 (845) 278-7424

JWM Architectural Group

DUTTON ASSOCIATES, LLC
LAND SURVEYORS AND CIVIL ENGINEERS
67 EASTERN BOULEVARD GLASTONBURY, CONNECTICUT 06033

CLARK ENGINEERING
CIVIL ENGINEERING
26 BUSHY HILL ROAD, P.O. BOX 419
GRANBY, CT 06035-0419
TELE: (860) 653-4352
FAX: (860) 653-0415

FRESHWATER WETLAND SERVICES
P.O. BOX 233
GRANVILLE, MA 01034
TELE: (413) 695-2195
freshwaterwetland@gmail.com

Developer:
THE CASLE CORPORATION
200 FISHER DRIVE
AVON, CONNECTICUT
DESIGN BUILDER
CASLE

Date	Description	No.
10/30/13	Mylar Filing	
07/31/13	ZONING	
07/11/13	WETLAND SUB	
07/11/13	07/11/13	
06/21/13	WETLAND	

Revisions

Phase 1 Erosion Control Plan

Glastonbury Gateway IV

Western Boulevard

Glastonbury, Connecticut

Project: 1972
Scale: 1"=30'
Date: 04/10/13
Drawn by: CB
Checked by: PED
Drawing No.
L-7a

O:\CTP\P\1972 casle gateway iv\DWG\1972 Erosion Control Phase1.dwg \L-7a Phase 1 Erosion Control Plan\cbarzola\October 30, 2013

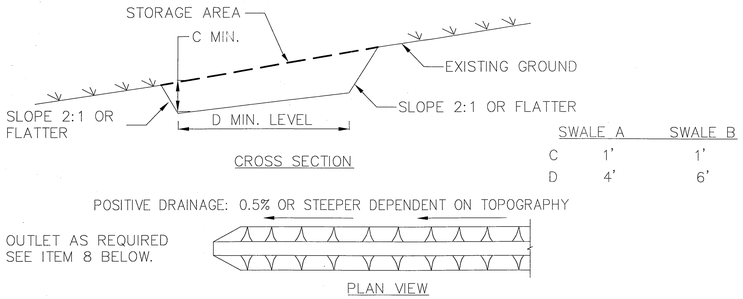

CROSS SECTION

	SWALE A	SWALE B
C	1'	1'
D	4'	6'

POSITIVE DRAINAGE: 0.5% OR STEEPER DEPENDENT ON TOPOGRAPHY

OUTLET AS REQUIRED SEE ITEM 8 BELOW.

PLAN VIEW

CONSTRUCTION SPECIFICATIONS

1. ALL TEMPORARY SWALES SHALL HAVE UNINTERUPTED POSITIVE GRADE TO AN OUTLET.
2. DIVERTED RUNOFF FROM A DISTURBED AREA SHALL BE CONVEYED TO A SEDIMENT TRAPPING DEVICE.
3. DIVERTED RUNOFF FROM AN UNDISTURBED AREA SHALL OUTLET DIRECTLY INTO AN UNDISTURBED STABILIZED AREA AT NON-EROSIVE VELOCITY.
4. ALL TREES, BRUSH, STUMPS, OBSTRUCTIONS, AND OTHER OBJECTIONABLE MATERIAL SHALL BE REMOVED AND DISPOSED OF SO AS NOT TO INTERFERE WITH THE PROPER FUNCTIONING OF THE SWALE.
5. THE SWALE SHALL BE EXCAVATED OR SHAPED TO LINE, GRADE, AND CROSS SECTION AS REQUIRED TO MEET THE CRITERIA SPECIFIED HEREIN AND BE FREE OF BANK PROJECTIONS OR OTHER IRREGULARITIES WHICH WILL IMPEDE NORMAL FLOW.
6. FILLS SHALL BE COMPACTED BY EARTH MOVING EQUIPMENT.
7. ALL EARTH REMOVED AND NOT NEEDED FOR CONSTRUCTION SHALL BE PLACED SO THAT IT WILL NOT INTERFERE WITH THE FUNCTIONING OF THE SWALE.
8. STABILIZATION SHALL BE AS PER THE FLOW CHANNEL STABILIZATION CHART BELOW:

TYPE OF TREATMENT	CHANNEL GRADE	A(5 AC. OR LESS)	B(5 AC -10AC)
1	0.5-3.0%	SEED AND STRAW MULCH	SEED AND STRAW MULCH
2	3.1-5.0%	SEED AND STRAW MULCH	SEED USING JUTE OR EXCELSIOR
3	5.1-8.0%	SEED WITH JUTE OR EXCELSIOR, SOD	LINED WITH 4-8" RIP-RAP OR RECYCLED CONCRETE EQUIVALENT
4	8.1-20.%	LINED WITH 4-8" RIP-RAP	ENGINEERED DESIGN

9. PERIODIC INSPECTION AND REQUIRED MAINTENANCE MUST BE PROVIDED AFTER EACH RAIN EVENT.

(I) TEMPORARY SWALE
N.T.S.

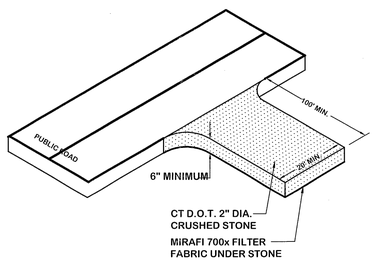

1. STONE SIZE- USE 2" STONE OR RECLAIMED OR RECYCLED CONCRETE EQUIVALENT.
2. LENGTH- NOT LESS THAN 100'
3. DEPTH- NOT LESS THAN 6"
4. WIDTH- 12' MINIMUM, BUT NOT LESS THAN THE FULL WIDTH AT POINTS WHERE THE INGRESS AND EGRESS OCCURS. 24' IF SINGLE ENTRANCE TO SITE.
5. FILTER CLOTH- WILL BE PLACED OVER THE ENTIRE AREA PRIOR TO THE PLACEMENT OF STONE.
6. SURFACE WATER- ALL SURFACE WATER FLOWING OR DIVERTED TOWARD CONSTRUCTION ENTRANCES SHALL BE PIPED ACROSS THE ENTRANCE. IF PIPING IS IMPRACTICAL, A MOUNTABLE BERM WITH 5:1 SLOPES WILL BE PERMITTED.
7. MAINTENANCE- THE ENTRANCE SHALL BE MAINTAINED IN A CONDITION WHICH WILL PREVENT THE TRACKING OR FLOWING OF SEDIMENTS ONTO PUBLIC RIGHTS-OF-WAY. ALL SEDIMENT SPILLED, DROPPED, WASHED OR TRACKED ONTO PUBLIC RIGHTS-OF-WAY MUST BE REMOVED IMMEDIATELY.
8. WHEN WASHING IS REQUIRED, IT SHALL BE DONE IN AN AREA STABILIZED WITH STONE AND WHICH DRAINS INTO AN APPROVED SEDIMENT TRAPPING DEVICE.
9. PERIODIC INSPECTION AND NEEDED MAINTENANCE SHALL BE PROVIDED AFTER EACH RAIN.

(II) CONSTRUCTION ENTRANCE
N.T.S.

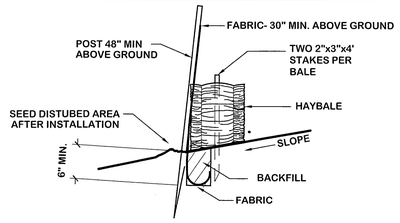

NOTES: SILT FENCE INSTALLATION:
1. USE 2" X 2" X 7' STAKES OF WOOD OR METAL SPACED 6' TO 10' APART.
2. BURY FABRIC ON UPHILL SIDE 6" DEEP WITH FABRIC CURLED UPSLOPE.
3. SECURE FABRIC TO EACH STAKE. FILTER FABRIC TO BE GEOFAB MATERIAL OR APPROVED EQUAL.
4. ANGLE STAKES TOWARD WATER SOURCE.
5. OVERLAP ENDS OF FABRIC TO PROHIBIT WATER FROM ESCAPING AROUND ENDS.

HAYBALE INSTALLATION:
1. INSTALL HAYBALE UPHILL OF SILT FENCE.
2. BUTT ENDS OF HAYBALE TIGHTLY.

NOTE: SUBSTITUTE STRAW BALES OR STRAW WATTLES FOR HAYBALES ALONG WETLAND EDGE

(III) SILT FENCE/HAYBALE BARRIER DETAIL
N.T.S.

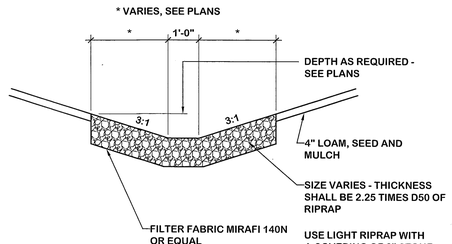

NOTE:
ALL MATERIALS SHALL CONFORM TO THE CURRENT EDITION OF THE NYSDOT STANDARD SPECIFICATIONS.

(V) RIPRAP SWALE
N.T.S.

USE AS DIRECTED

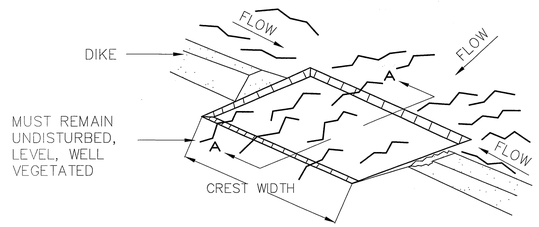

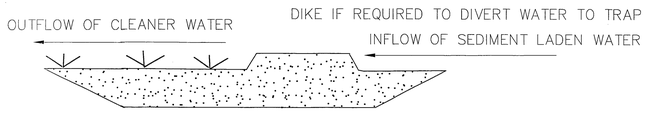

CREST WIDTH (FT)=4xDRAINAGE AREA (ACRES)

SECTION A – A
EXCAVATED GRASS OUTLET SEDIMENT TRAP

CONSTRUCTION SPECIFICATIONS

1. VOLUME OF SEDIMENT STORAGE SHALL BE 3600 CUBIC FEET PER ACRE OF CONTRIBUTORY DRAINAGE AREA.
2. MINIMUM CREST WIDTH SHALL BE 4 x DRAINAGE AREA
3. SEDIMENT SHALL BE REMOVED AND TRAP RESTORED TO ITS ORIGINAL DIMENSIONS WHEN THE SEDIMENT HAS ACCUMULATED TO 1/2 THE DESIGN DEPTH OF THE TRAP. REMOVED SEDIMENT SHALL BE DEPOSITED IN A SUITABLE AREA AND IN SUCH A MANNER THAT IT WILL NOT ERODE.
4. THE STRUCTURE SHALL BE INSPECTED AFTER EACH RAIN AND REPAIRS MADE AS NEEDED.
5. CONSTRUCTION OPERATIONS SHALL BE CARRIED OUT IN SUCH A MANNER THAT EROSION AND WATER POLLUTION SHALL BE MINIMIZED.
6. THE SEDIMENT TRAP SHALL BE REMOVED AND AREA STABILIZED WHEN THE REMAINING DRAINAGE AREA HAS BEEN PROPERLY STABILIZED.
7. ALL CUT SLOPES SHALL BE 1:1 OR FLATTER.

MAXIMUM DRAINAGE AREA: 5 ACRES

(VI) GRASS OUTLET SEDIMENT TRAP ST-II
N.T.S.

USE AS DIRECTED

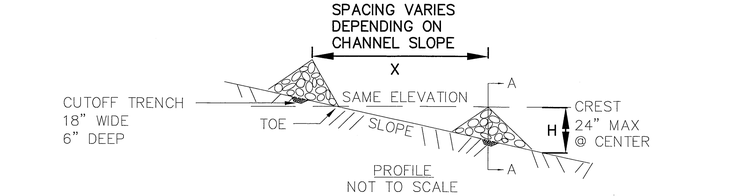

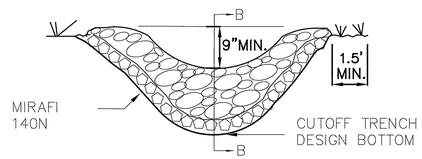

$$X = \frac{H\ (Ft)}{SLOPE\ (FT/FT)}$$

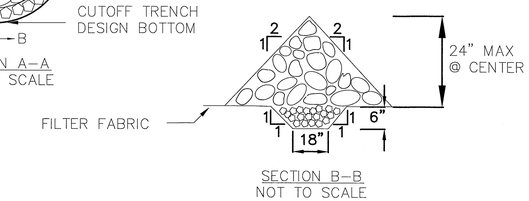

CONSTRUCTION SPECIFICATIONS

1. STONE WILL BE PLACED ON A FILTER FABRIC FOUNDATION TO THE LINES, GRADES AND LOCATIONS SHOWN IN THE PLAN.
2. SET SPACING OF CHECK DAMS TO ASSUME THAT THE ELEVATIONS OF THE CREST OF THE DOWNSTREAM DAM IS AT THE SAME ELEVATION OF THE TOE OF THE UPSTREAM DAM.
3. EXTEND THE STONE A MINIMUM OF 1.5 FEET BEYOND THE DITCH BANKS TO PREVENT CUTTING AROUND THE DAM.
4. PROTECT THE CHANNEL DOWNSTREAM OF THE LOWEST CHECK DAM FROM SCOUR AND EROSION WITH STONE OR LINER AS APPROPRIATE.
5. ENSURE THAT CHANNEL APPURTENANCES SUCH AS CULVERT ENTRANCES BELOW CHECK DAMS ARE NOT SUBJECT TO DAMAGE OR BLOCKAGE FROM DISPLACED STONE.
6. MAXIMUM DRAINAGE AREA 2 ACRES.

(VII) CHECK DAM
N.T.S.

USE AS DIRECTED

GATEWAY I EXPANSION / THE CASLE CORPORATION	PE - PLANNED EMPLOYMENT
PROJECT / APPLICANT	ZONE
300-310 & 320-330 WESTERN BOULEVARD	
PROJECT ADDRESS	
SPECIAL PERMIT SECTION	TPZ CHAIRMAN
DATE SPECIAL PERMIT APP'D	DIRECTOR OF COMMUNITY DEVELOPMENT
FILE NO.	

STATE OF CONNECTICUT PHILIP E. DOANE No. 402 REGISTERED LANDSCAPE ARCHITECT

LADA, P.C.
Land Planners
104 West Street
Simsbury, CT 06070 (860) 651-4011
3050 Route 32 (Suite 106)
Brewster, NY 10509 (845) 278-7424

JWM Architectural Group

DUTTON ASSOCIATES, LLC
LAND SURVEYORS AND CIVIL ENGINEERS
87 EASTERN BOULEVARD
GLASTONBURY, CONNECTICUT 06033
TEL: 860-633-4441 FAX: 860-633-3857
EMAIL: JAMES@DUTTONASSOCIATES.COM

CLARK ENGINEERING
CIVIL ENGINEERING
26 BUSHY HILL ROAD, P.O. BOX 419
GRANBY, CT 06035-0419
TELE: (860) 653-4352
FAX: (860) 653-0410

FRESHWATER WETLAND SERVICES
P.O. BOX 233
GRANVILLE, MA 01034
TELE: (413) 695-2195
freshwaterwetland@gmail.com

Developer: THE CASLE CORPORATION
200 FISHER DRIVE
AVON, CONNECTICUT
DESIGN BUILDER
CASLE

Date	Description	No.
Revisions		
10/30/13	Mylar Filing	
07/31/13	ZONING	
07/11/13	WETLAND SUB	

Erosion Control Details

Glastonbury Gateway IV

Western Boulevard

Glastonbury, Connecticut

Project: 1972
Scale: 1"=30'
Date: 06/21/13
Drawn by: CB
Checked by: PED
Drawing No.
L-8.1

O:\CIVIL\PROJ\1972 casle gateway IV\DWGS\1972 Erosion Details.dwg L1-8.1 Erosion Control Details\dcarson\October 30, 2013

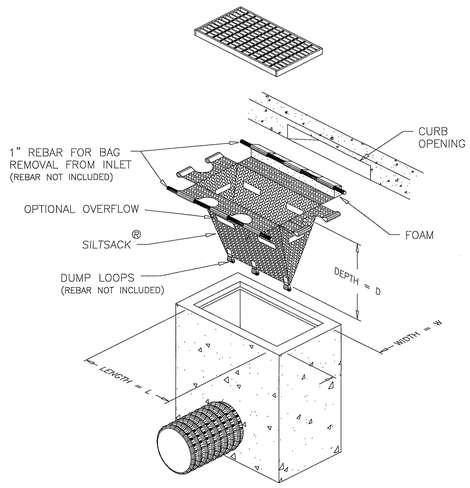

XIV SILT SACK DETAIL
N.T.S.

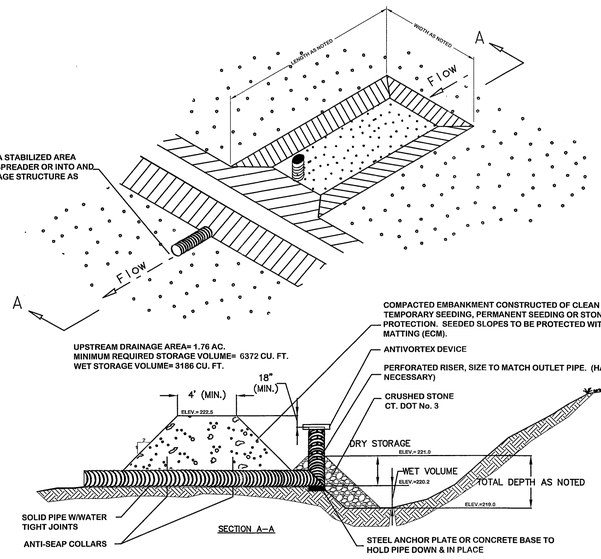

NOTES:

1. THE TEMPORARY SEDIMENT TRAP SHALL HAVE AN INITIAL STORAGE (WET STORAGE + DRY STORAGE) OF 134 CU. YDS. PER ACRE OF DRAINAGE AREA.
2. LOCATE TRAPS TO COLLECT CONCENTRATED STORMWATER DRAINING FROM THE CONSTRUCTION SITE. LOCATE TO OBTAIN MAXIMUM STORAGE BENEFIT FROM THE TERRAIN, FOR EASE OF CLEANOUT, AND DISPOSAL OF TRAPPED SEDIMENT.
3. TRAPS SHALL BE CONSTRUCTED SO SURFACE WATER CANNOT PASS AROUND THE ENDS.
4. UNLESS OTHERWISE NOTED ON THE PLANS, THE WET VOLUME OF THE TRAP SHALL BE ONE-HALF OF THE TOTAL STORAGE VOLUME.
5. THE LENGTH TO WIDTH RATIO SHALL BE A MINIMUM OF 2:1 MEASURED FROM THE POINT OF MAXIMUM RUNOFF INTRODUCTION TO THE OUTLET. BAFFLES MAY BE USED TO MEET THIS REQUIREMENT.
7. AFTER THE UPSTREAM DRAINAGE AREA HAS BEEN STABILIZED, THE TRAP SHALL BE REMOVED AND THE AREA REGRADED AND STABILIZED.
8. WHEN SEDIMENTS HAVE ACCUMULATED TO ONE-HALF OF THE MINIMUM REQUIRED VOLUME OF WET STORAGE, DEWATER THE TRAP AS NEEDED, REMOVE SEDIMENTS AND RESTORE THE TRAP TO THE ORIGINAL DIMENSIONS.

XVII TEMPORARY SEDIMENT TRAP USE AS NEEDED
N.T.S.
USE AS DIRECTED

INVASIVE SPECIES MANAGEMENT PROGRAM

TAKEN FROM THE ENVIRONMENTAL MANAGEMENT REPORT SUBMITTED WITH THE APPLICATION BY FRESHWATER WETLAND SERVICES

Invasive Species Management

The project also proposes to manage invasive species within the conservation easement on the property, on the southerly side of the watercourse. The target species include but are not limited to Multiflora Rose, Autumn Olive and Asiatic Bittersweet. The following describes each species growth habits and potential control methods for each.

Multiflora Rose (Rosa multiflora) is a thorny shrub that can both climb like a vine and form dense thickets. It spreads by root suckering and tip layering and when wildlife disperse seeds after eating the fruit. It is often found growing in old fields, along roads, on streambanks, and in forest gaps.

• Mechanical Control – hand pull small plants, or dig and pull large plants removing all of the roots since fragments can re-sprout. Repeated mowing can also control growth, but will probably not result in eradication.

• Chemical Control – Spray foliage with triclopyr before and during flowering, or use glyphosate after flowering. Apply glyphosate or triclopyr to cut stems anytime, although herbicides are more effective in the fall when nutrients are being sent to the roots.

Autumn Olive (Elaeagnus umbellate) is a fast growing woody shrub or tree that produces abundant, fleshy fruits. It disperses to new areas after wildlife eat the seed-filled fruits. Tolerant of shade, and preferring dry conditions over wet, it often grows in disturbed areas, clearings, open fields, and forest margins.

• Mechanical Control – Pull or dig young plants, making sure to remove the entire root. Cut larger plants at ground level when in flower to prevent seed production. Plants will re-sprout from the base, so repeated cutting is necessary.

• Chemical Control – For small plants spray foliage with either glyphosate or triclopyr. For larger plants apply glyphosate or triclopyr to freshly cut stumps, or girdle tree with an axe and apply herbicide to the cut area. Herbicides may be most effective when used late in the growing season.

Asiatic Bittersweet (Celastrus orbiculatus), also known as Oriental bittersweet, is an aggressive vine that can quickly smother other vegetation. It has twining stems that strangle shrub and tree limbs, and its weight can cause uprooting and toppling. Spreading occurs by root suckering, and when birds eat the very distinctive red fruits. It is shade tolerant, can grow in a variety of habitats, and is quick to invade any newly disturbed area.

• Mechanical Control – Pull small plants including the entire root system. Cut larger vines close to the ground every couple of weeks to prevent re-sprouting and to deplete the root system.

• Chemical Control – For low, dense patches cut all vegetation to ground level, allow to regrow, then spray foliage with triclopyr. For taller patches treat fresh cut stumps with either triclopyr or glyphosate in late summer.The following protocol is proposed for the Enhancement/Mitigation Area as shown on the Project Plans, specifically the entitled "Planting Plan Full Development" to control invasive species and enhance the wildlife habitat within this area. Additional plantings are proposed outside of the conservation area and are shown the above referenced plan.

• Remove invasive species within the Mitigation Area using a combination of mechanical and chemical controls as discussed above. The Mitigation Area is defined on the Project Plans and is contained within the property boundaries. This Area does not extend to the north side of the watercourse and is completely contained on the south side of the watercourse. The control method chosen shall be suitable for each species treated. Treatment with herbicides shall be limited to methods that would not allow the herbicide to enter the adjacent aquatic habitat; this includes application techniques and chemical modifications (Rodeo vs. Round-up).

• Once removed, invasive species shall be properly disposed of to prevent the spread of seed stock or re-growth.

• Mitigation plantings shall be installed as specified in Table 1 below and as shown on the planting schedule.

• Actual number of species shall be dependent on the extent of the removal of invasive species. Post removal of invasive species, the area void of woody vegetation shall be assessed and measured. Areas void or containing sparse woody vegetative species shall be planted in the densities specified in the Table 1. The densities for each vegetative layer shall be considered independently of each other.

• Prior to initial treatment, two vegetative monitoring plots shall be established to gather baseline data on species diversity in the mitigation area. The center of these plots shall be located in the field using a stake and/or flagging for use during subsequent evaluations.

• The initial treatment shall be conducted during the spring or fall to aid in the success rate of the establishment of the vegetative plantings.

• Post treatment evaluations shall be conducted during the fall of each year to document the invasive species composition in the mitigation area. Evaluations and treatment shall be conducted for three full growing seasons post initial treatment. If the initial treatment is conducted during the fall, an evaluation and report shall be completed post treatment. The data collected shall be included in a written report submitted to the Town of Glastonbury for review before December 31st of the evaluation year. This report will detail species composition, and any recommendations for additional treatment of invasive species to be implemented during the following growing season.

• The invasive species treatment shall be considered a success when less than 25% invasive species have colonized the mitigation area.

• The report submitted post the third growing season shall include recommendations as to future invasive species treatments for the applicant and the Town of Glastonbury to review. This report shall also evaluate the potential for achieving the established success rate for each treatment. At that time, it shall be determined by the permitting authorities if additional treatment and monitoring is required.

The species to be replanted were chosen to: provide enhanced wildlife habitat benefits; out compete invasive species in the area; enhance vertical stratification; increase species diversity; and enhance the buffer between the development and the condominiums. Mast producing shrubs and trees were chosen to increase the food source to the resident wildlife. The establishment of a dense native shrub layer will aid in out competing invasive species in the area. In addition, the site demonstrates that invasive species are less dominant when mature trees are located, limiting light to the understory. The introduction of additional trees will also aid in controlling the re-establishment of invasive species.

EROSION CONTROL MONITORING REQUIREMENTS

NOTE:
EROSION CONTROL TO BE MONITORED WEEKLY BY DEVELOPERS PROJECT MANAGER AND DOCUMENTED WITH WEEKLY NOTES DESCRIBING ANY NECESSARY MODIFICATIONS OR ALTERATIONS. EROSION CONTROL MEASURES WILL BE REVIEWED ONCE PER MONTH DURING CONSTRUCTION BY THE PROJECT DESIGN PROFESSIONAL AND A REPORT WITH RECOMMENDATIONS WILL BE FORWARDED TO THE PROPERTY DEVELOPER AND TOWN LAND USE STAFF. THE MONTHLY REPORT WILL ATTACH THE WEEKLY REPORTS PREPARED BY THE PROJECT MANAGER. MONTHLY REPORTS WILL CONTINUE UNTIL SITE STABILIZATION FOLLOWING THE ISSUANCE OF A C.O. CULMINATING WITH FINAL SIGN OFF INSPECTION COORDINATION WITH THE TOWN PLANNER AND TOWN ENVIRONMENTAL PLANNER.

GATEWAY I EXPANSION / THE CASLE CORPORATION	PE - PLANNED EMPLOYMENT
PROJECT / APPLICANT	ZONE
300-310 & 320-330 WESTERN BOULEVARD	
PROJECT ADDRESS	
SPECIAL PERMIT SECTION	TPZ CHAIRMAN
DATE SPECIAL PERMIT APP'D	DIRECTOR OF COMMUNITY DEVELOPMENT
FILE NO.	

STATE OF CONNECTICUT · WAYNE E. DOTY · No. 402 · LICENSED LANDSCAPE ARCHITECT

LADA, P.C.
Land Planners
104 West Street
Simsbury, CT 06070 (860) 651-4571
2060 Route 22 (Suite 106)
Brewster, NY 10509 (845) 278-7424

JWM Architectural Group

DUTTON ASSOCIATES, LLC
LAND SURVEYORS AND CIVIL ENGINEERS
67 EASTON ROAD/PMB
GLASTONBURY, CONNECTICUT 06033
TEL: 860-633-7401 FAX: 860-633-4807
EMAIL: JAUBREY@SNIZEK.COM

CLARK ENGINEERING
CIVIL ENGINEERING
26 BUSHY HILL ROAD, P.O. BOX 419
GRANBY, CT 06035-0419
TELE: (860) 653-4352
FAX: (860) 653-0415

FRESHWATER WETLAND SERVICES
P.O. BOX 233
GRANVILLE, MA 01034
TELE: (413) 695-2195
freshwaterwetland@gmail.com

Developer:
THE CASLE CORPORATION
200 FISHER DRIVE
AVON, CONNECTICUT
DESIGN BUILDER
CASLE

Date	Description	No.
10/30/13	Mylar Filing	
07/31/13	ZONING	
07/11/13	WETLAND SUB	

Revisions

Erosion Control Details

Glastonbury Gateway IV

Western Boulevard Glastonbury, Connecticut

Project: 1972
Scale: N.T.S.
Date: 06/21/13
Drawn by: CB
Checked by: PED
Drawing No.
L-8.2

O:\CTPR\1972 castle gateway iv\DWGS\1972 Erosion Details.dwg\L-8.2 Erosion Control Details\cbarzois\October 30, 2013

EROSION AND SEDIMENT CONTROLS

GENERAL PRINCIPLES

1. Downslope and perimeter controls should be installed before land clearing activities occur.
2. Land disturbance will be kept to a minimum.
3. Limit disturbance to those areas necessary for construction. Restabilization will be scheduled immediately after disturbance.
4. Stabilize and provide temporary or permanent cover as soon as possible.
5. Earth disturbance should be timed to minimize potential impacts caused by seasonal weather changes.
6. Construction of infiltration measures when used should be delayed to end of construction when upstream drainage areas have been stabilized.
7. Remove temporary perimeter controls only after area has been completely stabilized. Maintain all measures to ensure they are effective.
8. Erosion checks consisting of silt fence/staked straw/hay bales and stone check dams shall be installed to prevent siltation down grade of construction. Straw/ hay bales shall be placed and staked to the ground per U.S.D.A. Soil Conservation Service details as appropriate (see detail Sheet # L-6.2), at points where impounded water will be permitted to flow.
9. Straw/hay bale and / or filter fabric barriers will be installed at all outlets and along the toe of all critical slopes.
10. Flared end discharge areas will be protected with rip-rap pads. Energy dissipaters will be provided as necessary.
11. Catch basins will be protected with straw/hay bales and/or filter fabric barriers throughout the construction period and until all disturbed areas are thoroughly stabilized.
12. All erosion and sediment control measures will be constructed in accordance with the standards and specifications of 2002 Connecticut Guidelines for Soil Erosion & Sediment Control.
13. Erosion and sediment control measures will be installed prior to construction whenever possible.
14. All control measures will be maintained in effective condition throughout the construction period.
15. Additional control measures will be installed during the construction period if necessary or required.
16. All erosion and sediment control measures should be cleaned, repaired and/or replaced after every storm and as necessary to ensure effectiveness.
17. Sediment removal from control measures will be disposed of in a manner which is consistent with the intent of the plan.
18. The contractor is assigned the responsibility for implementing the erosion and sediment control plan. This responsibility includes the installation and maintenance of control measures, informing all parties engaged on the construction site of the requirements and objectives of the plan, notifying the planning and zoning office of any transfer of responsibility, and for conveying a copy of the erosion and sediment control plan if the title to the land is transferred.
19. The contractor is responsible for upgrading the erosion control measures on site to ensure no silty water enters the on site streams or wetlands or leaves the site. The contractor shall increase the Erosion & Sediment on site as required due to site and weather conditions.
20. Use clear water diversions to direct runoff from undisturbed, upgradient areas away from disturbed areas in the construction zone.
21. Use temporary fill berms to direct runoff away from constructed slopes on a daily basis. Berms to be 9" high x 4' wide located a minimum of 2' away from the edge of the constructed slope.

STABILIZATION PRACTICES

Temporary Stabilization:

Top soil stockpiles and disturbed portions of the site where construction activity temporarily ceases for at least 21 days, will be stabilized with temporary seed and mulch no later than 14 days from the last construction activity in that area. The temporary seed shall be Rye (grain) applied at the rate of 120 pounds per acre. Prior to seeding, 2,000 pounds of ground agriculture limestone and 1,000 pounds of 10-10-10- fertilizer shall be applied to each acre to be stabilized. After seeding, each area shall be mulched with 4,000 pounds per acre of straw. The straw mulch is to be tacked into place by a disk with blades set nearly straight. Areas of the site which are to be paved will be temporarily stabilized by applying stone sub-base until bituminous pavement can be applied.

Permanent Stabilization:

Disturbed portions of the site where construction activities permanently cease shall be stabilized with permanent seed no later than 7 (seven) days after the last construction activity. Permanent stabilization shall be performed as follows:

A. Fertilizer and Limestone

Contractor shall conduct appropriate soil tests to determine amount of fertilizer and limestone required to ensure an acceptable lawn. Generally, fertilizer should be at the following rates.

Ground Limestone	100lbs./1000 s.f.
Commercial Fertilizer	20 lbs./1000 s.f.

Unless otherwise indicated by soil test, fertilizer should consist of:

10% Nitrogen (at least 50% of nitrogen shall be from organic sources)
6% Phosphoric Acid
4% Potash

B. Lawn Seed

Seed mixture for late summer/early fall/early spring planting. Sow at a rate of 4 ibs./1000 s.f.

Creeping Red Fescue	35 Parts
Chewings Red Fescue	20 Parts
Kentucky 31 Tall Fescue	15 Parts
Baron Bluegrass	20 Parts
Rough Bluegrass	10 Parts

Seed mixture for planting May 1st. to late summer. Sow at rate of 6 lbs./1000 s.f.

Creeping Red Fescue	35 Parts
Chewings Red Fescue	20 Parts
Kentucky 31 Tall Bluegrass	20 Parts
Domestic Ryegrass	25 Parts

Apply seed uniformly by hand, cyclone seeder, drill or hydroseeder. Seed bed should be prepared by hand raking to loosen and smooth soil and remove surface stones. After seed, the bed should be firmed with a roller. Apply mulch where applicable. Water as necessary.

Additional Stabilization:

Additional Stabilization measures required on this project are (check all that apply):

___ Tree Protection (See Sheet # L-__ for Detail)
_✓_ Sod Stabilization
___ Vegetative Buffer Strips (__Temporary or __Permanant)
_✓_ Geotextiles
_✓_ Riprap

Description of additional stabilization methods, and design guidlines: Erosion Control fabric to be applied to all slopes steeper than 3 on 1

STRUCTURAL PRACTICES

The following temporary structural practices will be required by this project (Check all that apply):

___Rip Rap Swales
_✓_Haybales
___Earth Dikes
_✓_Temporary Sediment Basins (min 134 c.y. per acre)
___Pipe Slope Drains
_✓_Stabilized Construction Entrance
_✓_Temporary Sediment Trap
_✓_Cutoff Swales
_✓_Silt Fence
_✓_Stone Check Dams
_✓_Storm Inlet/ Drain Protection

Description of temporary structural practices methods, materials, and design guidlines:

Use above as shown on plans. Temporary sediment basins must be installed when the site is unstablized to catch water prior to entering existing stormwater basins. Locations of these basins will be determined in the field by the contractor.

The following permanent structural practices will be required by this project (Check all that apply):

_✓_Grass Swale
___Paved Swale
___First Flush basin
___Grass Buffer Strips
___Rip-Rap Swale
_✓_Stone Check Dams
___ Vortechnics type units

Description of permanent structural practices, methods, materials and design guidlines:

Unless specifically approved in writing, all structural practices shall be installed on upland soils.

MAINTENANCE PRACTICES

Qualified personnel shall inspect disturbed areas of the construction activity, structural control measures, and locations where vehicles enter and exit at least once every 7 days and within 24 hours of the end of any storm of 0.5" or greater. Please also refer to the Connecticut Guidelines for Soil Erosion and Sediment Control. Where conflicts occur, the most conservative applies. Where omissions occur, best management practices apply.

- All control measures will be inspected at least once each week and within 24 hours of any storm event of 0.5 inches or greater.
- All measures will be maintained in good woorking order. If a repair is necessary, it will be initiated within 24 hours of report.
- Built up sediment will be removed from the silt fence when it has reached one-third the height of the fence.
- Silt fence will be inspected for depth of sediment, tears, and to see that the fabric is securely attached to the fence posts, and to see that the fence posts are firmly in the ground.
- Temporary and permanent seeding and planting will be inspected for bare spots, washouts, and healthy growth.
- A maintenance inspection report will be made after each inspection.

TIMING OF CONTROLS/ MEASURES

As indicated in the sequence of major activities, the construction entrance and perimeter erosion control will be installed prior to clearing or grading of any other portions of the site. Areas where construction activity temporarily ceases for more than 21 days will be stabilized with a temporary seed and mulch within 14 days of last disturbance. Once construction activity ceases permanently in an area, that area will be stabilized with permanent seed and mulch within 7 days. After the entire area is stabilized, accumulated sediment will be removed from the Water Quality Improvement Measures. Perimeter controls will be actively maintained until project is completed and site is stabilized.

ESTABLISHMENT, REGISTRATION, AND UPDATING
THE STORMWATER POLLUTION PREVENTION PLAN

This sheet and associated plans shall be updated whenever there is a change of Contractor or Subcontractor or change in design, construction, operation or maintainance at the site which has the potential for discharge of pollutants to the waters of the State, and which has not otherwise been addressed, or if the actions required herein fail to prevent erosion.

The overall Stormwater Pollution Control Plan shall consist of:

1. Application Package
2. This Sheet
3. Details - Sheet L-8.1, L-8.2
4. Erosion Control Plan - Sheet L-7, L-7a
5. Grading Plan - Sheet L-3, L-3a
6. Utility Plan - Sheet L-11, L-11a, L-11b

A registration form with applicable fee must be submitted and plans prepared at least 30 days prior to start of construction activities to:

Department of Environmental Protection
Bureau of Water Management
Engineering and Enforcement Division
79 Elm Street
Hartford, CT 06106
Attn: General Permit Coordinator

Changes to information of the registration must be filed within 15 days. Copies of all documents related to this Stormwater Pollution Prevention Plan must be maintained for at least 3 years after the end of construction. Copies of all documents shall be retained on-site and accessible throughout construction.

DEWATERING WASTEWATERS

The following operation and structural practices will be required on this project to ensure that all dewatering wastewaters will not contain suspended solids in amounts that could reasonably cause pollution of waters of the State and which minimizes the discoloration of receiveing waters:

Description:

catch basins will be cleaned once per year

POST CONSTRUCTION STORMWATER MANAGEMENT

The following measures will be installed to control pollutants in stormwater discharges after construction:

___Vegetated Buffer Strips
___Retention Basins
_✓_Infiltration
_✓_Velocity Dissipation Structures
___ Vortechnics type units
___

Description:

A goal of 80% removal of total suspended soils shall be used in designing stormwater measures, unless specifically provided by DEP.

INSPECTION

Disturbed areas and areas used for storage of materials that are exposed to precipitation shall be inspected for evidence of, or the potential for, pollutants entering the drainage system. Erosion and sediment control measures identified in the plan shall be observed to ensure that they are operating correctly. Where discharge locations or points are designated, they shall be inspected to ascertain whether erosion control measures are effective in preventing significant impacts to receiving waters. Locations where vehicles enter or exit the site shall be inspected for evidence of off-site sediment tracking.

Based on the results of the inspection, the description of potential sources and pollution prevention measures identified in the plan shall be revised as appropriate, as soon as practicable, after such inspection. Such modifications shall provide for timely implementation of any changes to the plan within 7 calendar days following the inspection.

A report summarizing the scope of the inspection, names(s) and qualifications of personnel making the inspection, the date(s) of the inspection, major observations relating to the implementation of the stormwater control plan, and actions taken, shall be made and retained as part of the stormwater control plan for at least three years after the date of inspection. The report shall be signed by the permittee.
See Note L-8.2

OTHER CONTROLS

WASTE MATERIALS

All construction waste material will be collected and stored in securly covered metal dumpsters rented from the vendor, which is a solid waste management company located in ___to be determined___________. The dumpster will meet all local and Connecticut solid waste management regulations. All trash and construction debris from the site will be deposited in the dumpster. The dumpster will be emptied a minimum of once per week, or more often as necessary, and the trash will be hauled off-site to a Connecticut approved location. No construction waste materials will be buried on site. All personnel will be instructed regarding the correct procedure for waste disposal. Notices stating these practices will be posted in the office trailer and in the structure. The individual who manages the day-to-day site operations will be responsible for seeing that these procedures are followed.

OFF-SITE VEHICLE TRACKING

A stabilized construction entrance has been provided to help reduce vehicle tracking of sediments. The paved street adjacent to the site entrance will be swept daily to remove any excess mud, dirt or rock tracked from the site. Dump trucks hauling material from the construction site will be covered with a tarpaulin.

OTHER

Discharge of any substance not specifically described herin shall be considered a violation of this Stormwater Pollution Prevention Plan.

SITE DESCRIPTION

Project name and location:	Glastonbury Gateway IV
Owners name, address and phone:	Casle Corporation 200 Fisher Drive, Avon CT
Runoff coefficient post development:	
On-site Soils:	See Soils report filed with application
Amount and location of wetlands on-site: * Includes watercourses	1.08 Acres
Immediate and ultimate receiving water(s):	Unnamed tributary of Salmon Brook
Project Description:	Construction of 45,000 SF Office Buildings and Parking
Nature of proposed construction activities:	Construction of Buildings and parking for Medical Office use.

Total area of site: 344,220 ± SF (7.902 ± AC)

Area of disturbance: 270,075 ± SF (6.2 ± AC)

Sequence of major activities
Construction may be phased, each phase will follow this process:
1. Establish C.L.L.
2. Cut trees and remove, do not remove stumps.
3. Install perimeter erosion control barriers.
4. Remove stumps, strip topsoil and stockpile.
5. Protect stockpiles with erosion barriers.
6. Cut and fill Phase, establish temporary sediment traps as needed to respond to silt grades.
7. Install utilities and building foundations.
8. Install base paving course.
9. Finish building and site improvements.
10. Final planting and paving.
11. Continue erosion monitoring until site is stable/vegetated.
12. Continue invasive species monitoring for 3 years after final C.O.

Supporting plans:
See also: Site Plans prepared by Landscape Architectural Design Associates, P.C. and Clark Engineering
Connecticut Guidelines for Soil Erosion and Sediment Control

POLLUTION PREVENTION PLAN CERTIFICATION

I have personally examined and am familiar with the information submitted in this document and all attachments and certify that based on reasonable investigation, including my inquiry of those individuals responsible for obtaining the information, the submitted information is true, accurate and complete to the best of my knowledge and belief, and I understand that any false statement made in this document or its attachments may be punishable as a criminal offense.

SIGNED:______________________________

Title:______________________________

OWNER/APPLICANT:

DATE:______________

CONTRACTORS CERTIFICATION

I certify under penalty of law that I have read and understand the terms and conditions of the general permit for the discharge of stormwater associated with construction activity. I understand that as a contractor or subcontractor at the site, I am covered by this general permit, and must comply with the terms and conditions of this permit, including but not limited to the requirements of the stormwater pollution control plan prepared for the site.

SIGNED: John Burger

Name: Casle Corporation
Site Action Responsible for: CASLE

Contractor's Name: The Casle Corporation
Address: 200 Fisher Drive Avon CT
Phone: 860-674-9000

EMERGENCY CONTACT PERSON

SIGNED: John Burger

Name: Casle Corporation
Site Action Responsible for: CASLE

Contractor's Name: The Casle Corporation
Address: 200 Fisher Drive Avon CT
Phone: 860-674-9000

GATEWAY I EXPANSION / THE CASLE CORPORATION	PE - PLANNED EMPLOYMENT
PROJECT / APPLICANT	ZONE
300-310 & 320-330 WESTERN BOULEVARD	
PROJECT ADDRESS	
SPECIAL PERMIT SECTION	TPZ CHAIRMAN
DATE SPECIAL PERMIT APP'D	DIRECTOR OF COMMUNITY DEVELOPMENT
FILE NO.	

STATE OF CONNECTICUT
PHILIP E. DOYLE
No. 402
LICENSED LANDSCAPE ARCHITECT

LADA, P.C.
Land Planners
104 West Street
Simsbury, CT 06070 (860) 651-4971
2050 Route 22 (Suite 106)
Brewster, NY 10509 (845) 278-7424

JWM Architectural Group

DUTTON ASSOCIATES, LLC
LAND SURVEYORS AND CIVIL ENGINEERS
67 EASTERN BOULEVARD
GLASTONBURY, CONNECTICUT 06033
TEL: 860-633-8401 FAX: 860-633-8851
EMAIL: JMD@DUTTONASSOCIATESLLC.COM

CLARK ENGINEERING
CIVIL ENGINEERING
26 BUSHY HILL ROAD, P.O. BOX 419
GRANBY, CT 06035-0419
TELE: (860) 653-4352
FAX: (860) 653-0415

FRESHWATER WETLAND SERVICES
P.O. BOX 233
GRANVILLE, MA 01034
TELE: (413) 695-2195
freshwaterwetland@gmail.com

THE CASLE CORPORATION
200 FISHER DRIVE
AVON, CONNECTICUT
DESIGN BUILDER
Developer: CASLE

Date	Description	No.
10/30/13	Mylar Filing	
07/31/13	ZONING	
07/11/13	WETLAND SUB	

Revisions

Erosion Control Notes
Glastonbury Gateway IV
Western Boulevard
Glastonbury, Connecticut

Project: 1972
Scale: N.T.S.
Date: 06/21/13
Drawn by: CB
Checked by: PED
Drawing No.
L-8.3

O:\CT\PIP\1972 casle gateway iv\DWG\1972 Erosion Details.dwg \L-8.3 Erosion Control Notes\cbarzola\October 30, 2013

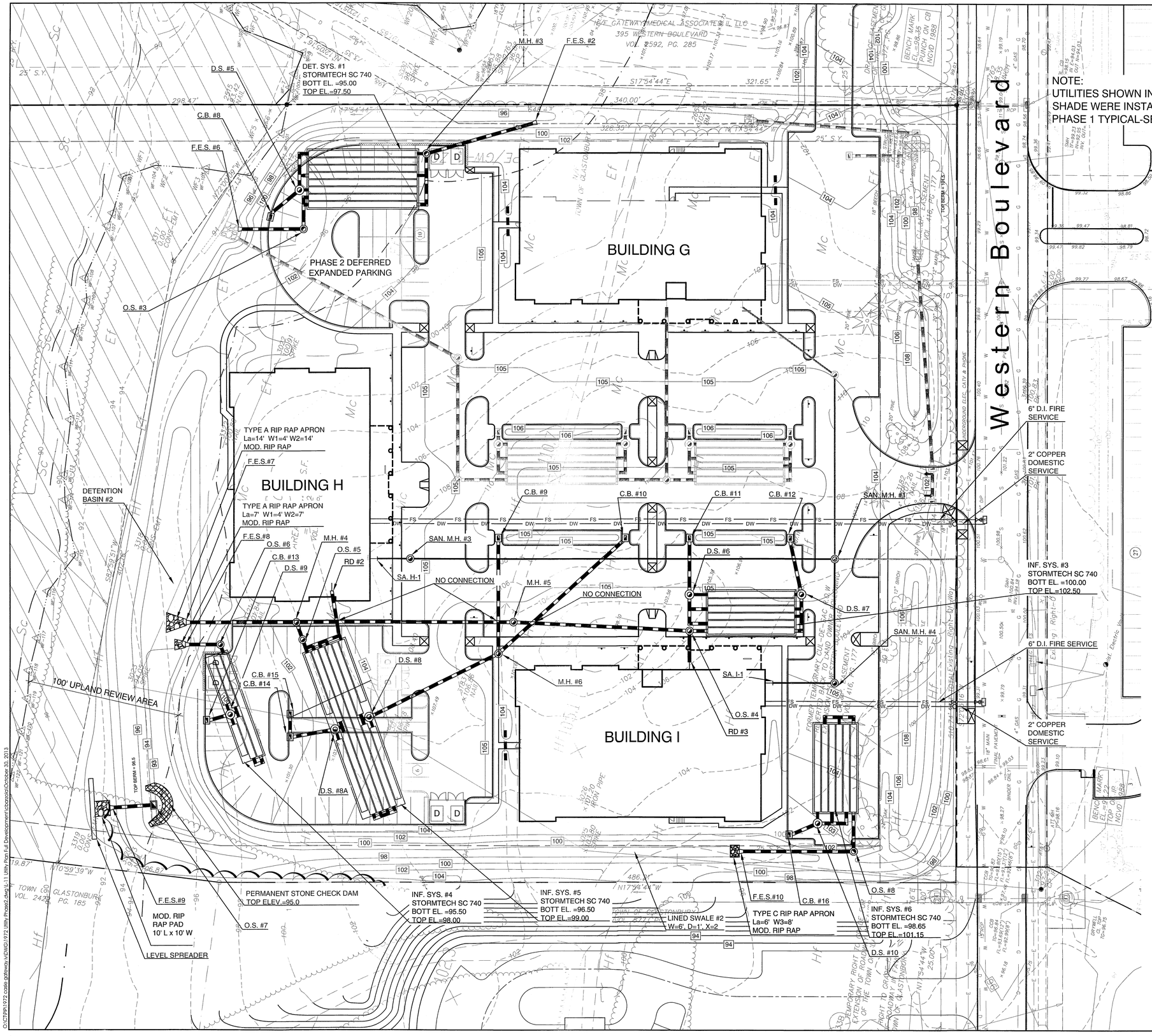

LEGEND

- CATCH BASIN
- MANHOLE
- PHASE 2 DRAINAGE
- PHASE 1 DRAINAGE
- SA — SANITARY
- W — WATER
- FIRE HYDRANT
- FLARED END
- CONDUITS
- E — ELECTRIC
- G — GAS
- T — TELEPHONE

30' 15' 0' 30' 90'

SCALE: 1" = 30'

DRAINAGE SYSTEM DATA-PHASE 2 -DEFERRED EXPANDED PARKING NORTH OF BUILDING H				
FES #6			94.00	
OS #3	101.50	94.50	94.25	40 L.F.-15" CPEP-S @ 0.63%
MH #3	104.50	95.00	95.00	SEE DET. SYS. #1 DETAIL
FES #2			96.00	74 L.F.-15" CPEP-S @ 1.35%
CB #8-'C'	100.50		95.50	22 L.F.-12" CPEP-S @ 2.27%
DS #5	101.40	95.00	95.01 (24" 95.75 (15")	SEE DET. SYS. #1 DETAIL

DRAINAGE SYSTEM DATA-PHASE 2				
STRUCTURE & TYPE	TOP FRAME ELEVATION	INVERT IN ELEVATION	INVERT OUT ELEVATION	PIPE OUT
FES #7			94.00	
MH #4	103.40	94.77 (S) 95.88 (W)	94.77	68 L.F.-15" CPEP-S @ 1.13%
MH #5	105.00	96.19	96.19	142 L.F.-15" CPEP-S @ 1.00%
OS #4	105.26	100.50 (W) 100.00 (S)	99.50	114 L.F.-15" CPEP-S @ 1.50%
DS #6	105.05	100.00	100.01 (24") 100.75 (15")	SEE INF. SYS. #3 DETAIL
CB #11-'CL'	104.50		100.34	34 L.F.-15" CPEP-S @ 1.00%
DS #7	104.96	100.00	100.01 (24") 100.75 (15")	SEE INF. SYS. #3 DETAIL
CB #12-'CL'	104.50		100.34	34 L.F.-15" CPEP-S @ 1.00%
RD #3			101.00	18 L.F.-12" CPEP-S @ 2.78%
OS #5	102.46	96.50	96.00	12 L.F.-15" CPEP-S @ 1.00%
DS #8	104.14	96.50	96.51 (24") 97.25 (15")	SEE INF. SYS. #5 DETAIL
MH #6	104.75	100.03 (ALL)	97.43	92 L.F.-15" CPEP-S @ 1.00%
CB #9-'CL'	104.40		100.85	72 L.F.-12" CPEP-S @ 1.14%
CB #10-'CL'	104.50		100.85	109 L.F.-12" CPEP-S @ 0.75%
DS #8A	104.14	96.50	96.51 (24") 97.25 (15")	SEE INF. SYS. #5 DETAIL
CB #14-'C'	101.35	96.89	96.89	26 L.F.-15" CPEP-S @ 1.50%
CB #15-'C'	101.35		97.00	11 L.F.-15" CPEP-S @ 1.00%
RD #2			100.00	30 L.F.-12" CPEP-S @ 11.30%
FES #8			94.00	
OS #6	101.50	95.50	94.50	19 L.F.-15" CPEP-S @ 2.63%
DS #9	99.76	95.50	95.51 (24") 96.25 (15")	SEE INF. SYS. #4 DETAIL
CB #13-'C'	99.00		95.70	12 L.F.-15" CPEP-S @ 1.67%
FES #10			98.00	
OS #8	103.50	98.65	98.40	72 L.F.-15" CPEP-S @ 0.56%
DS #10	102.92	98.65	98.66 (24") 99.40 (15")	SEE INF. SYS. #6 DETAIL
CB #16 -'C'	102.30		98.85	16 L.F.-15" CPEP-S @ 1.25%
FES #9			92.25	
OS #7	95.88	SEE DETAIL	92.50	25 L.F.-15" CPEP-S @ 1.00%

FOR PHASE 1 DATA (STORM & SANITARY) SEE DRAWING L-11A

SANITARY SEWER DATA-PHASE 2			
SA. MH. #3	105.20	100.18	280 L.F.-6" PVC @ 1.36%
SA. MH. #4	105.07	99.30	80 L.F.-6" PVC @ 3.65%
SA. H-1		100.60	21 L.F.-6" PVC @ 2.00%
SA. I-1		100.50	40 L.F.-6" PVC @ 3.00%
NOTE: PIPE LENGTHS SHOWN ARE APPROXIMATE FROM CENTER OF STRUCTURE TO CENTER OF STRUCTURE			

GATEWAY I EXPANSION / THE CASLE CORPORATION	PE - PLANNED EMPLOYMENT
PROJECT / APPLICANT	ZONE
300-310 & 320-330 WESTERN BOULEVARD	
PROJECT ADDRESS	
SPECIAL PERMIT SECTION	TPZ CHAIRMAN
DATE SPECIAL PERMIT APP'D	DIRECTOR OF COMMUNITY DEVELOPMENT
FILE NO.	

LADA, P.C.
Land Planners
104 West Street
Simsbury, CT 06070 (860) 651-4571
1 Corporate Drive Suite 201
Shelton, CT 06484 (203) 929-8555
Brewster, NY 10509 (845) 278-7424

JWM Architectural Group

DUTTON ASSOCIATES, LLC
LAND SURVEYORS AND CIVIL ENGINEERS
67 EASTON BOULEVARD
PLAINVILLE, CONNECTICUT 06062
TEL: 860-410-4441 FAX: 860-410-4601
EMAIL: JAMES@DUTTONASSOCIATES.COM

CLARK ENGINEERING
CIVIL ENGINEERING
26 BUSHY HILL ROAD, P.O. BOX 419
GRANBY, CT 06035-0419
TELE: (860) 653-4352
FAX: (860) 653-0415

FRESHWATER WETLAND SERVICES
P.O. BOX 233
GRANVILLE, MA 01034
TELE: (413) 695-2195
freshwaterwetland@gmail.com

Developer: THE CASLE CORPORATION
200 FISHER DRIVE
AVON, CONNECTICUT
DESIGN BUILDER
CASLE

Date	Description	No.
10/30/13	Mylar Filing	
07/31/13	ZONING	
07/11/13	WETLAND SUB	
06/21/13	WETLAND	

Revisions

Utility Plan Full Development

Glastonbury Gateway IV

Western Boulevard

Glastonbury, Connecticut

Project: 1972
Scale: 1"=30'
Date: 04/10/13
Drawn by: CB
Checked by: PED
Drawing No.
L-11

O:\CIP\PN1972 casle gateway IV\DWGS\1972 Utility Plans2.dwg\L11 Utility Plan Full Development Updated October 30, 2013

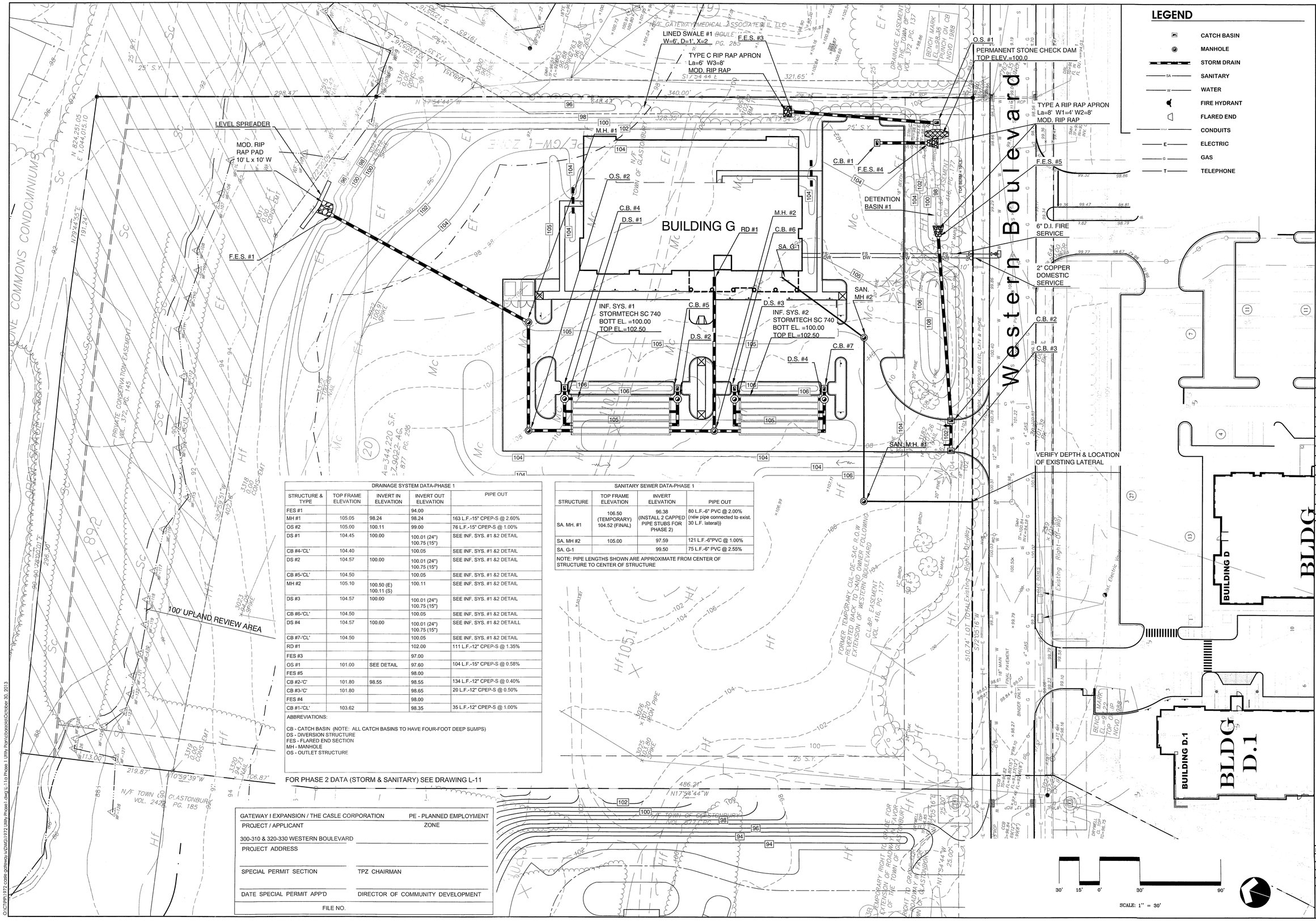

DRAINAGE SYSTEM DATA-PHASE 1				
STRUCTURE & TYPE	TOP FRAME ELEVATION	INVERT IN ELEVATION	INVERT OUT ELEVATION	PIPE OUT
FES #1			94.00	
MH #1	105.05	98.24	98.24	163 L.F.-15" CPEP-S @ 2.60%
OS #2	105.00	100.11	99.00	76 L.F.-15" CPEP-S @ 1.00%
DS #1	104.45	100.00	100.01 (24") 100.75 (15")	SEE INF. SYS. #1 &2 DETAIL
CB #4-'CL'	104.40		100.05	SEE INF. SYS. #1 &2 DETAIL
DS #2	104.57	100.00	100.01 (24") 100.75 (15")	SEE INF. SYS. #1 &2 DETAIL
CB #5-'CL'	104.50		100.05	SEE INF. SYS. #1 &2 DETAIL
MH #2	105.10	100.50 (E) 100.11 (S)	100.11	SEE INF. SYS. #1 &2 DETAIL
DS #3	104.57	100.00	100.01 (24") 100.75 (15")	SEE INF. SYS. #1 &2 DETAIL
CB #6-'CL'	104.50		100.05	SEE INF. SYS. #1 &2 DETAIL
DS #4	104.57	100.00	100.01 (24") 100.75 (15")	SEE INF. SYS. #1 &2 DETAILL
CB #7-'CL'	104.50		100.05	SEE INF. SYS. #1 &2 DETAIL
RD #1			102.00	111 L.F.-12" CPEP-S @ 1.35%
FES #3			97.00	
OS #1	101.00	SEE DETAIL	97.60	104 L.F.-15" CPEP-S @ 0.58%
FES #5			98.00	
CB #2-'C'	101.80	98.55	98.55	134 L.F.-12" CPEP-S @ 0.40%
CB #3-'C'	101.80		98.65	20 L.F.-12" CPEP-S @ 0.50%
FES #4			98.00	
CB #1-'CL'	103.62		98.35	35 L.F.-12" CPEP-S @ 1.00%

ABBREVIATIONS:

CB - CATCH BASIN (NOTE: ALL CATCH BASINS TO HAVE FOUR-FOOT DEEP SUMPS)
DS - DIVERSION STRUCTURE
FES - FLARED END SECTION
MH - MANHOLE
OS - OUTLET STRUCTURE

SANITARY SEWER DATA-PHASE 1			
STRUCTURE	TOP FRAME ELEVATION	INVERT ELEVATION	PIPE OUT
SA. MH. #1	106.50 (TEMPORARY) 104.52 (FINAL)	96.38 (INSTALL 2 CAPPED PIPE STUBS FOR PHASE 2)	80 L.F.-6" PVC @ 2.00% (new pipe connected to exist. 30 L.F. lateral))
SA. MH #2	105.00	97.59	121 L.F.-6"PVC @ 1.00%
SA. G-1		99.50	75 L.F.-6" PVC @ 2.55%

NOTE: PIPE LENGTHS SHOWN ARE APPROXIMATE FROM CENTER OF STRUCTURE TO CENTER OF STRUCTURE

FOR PHASE 2 DATA (STORM & SANITARY) SEE DRAWING L-11

GATEWAY I EXPANSION / THE CASLE CORPORATION	PE - PLANNED EMPLOYMENT
PROJECT / APPLICANT	ZONE
300-310 & 320-330 WESTERN BOULEVARD	
PROJECT ADDRESS	
SPECIAL PERMIT SECTION	TPZ CHAIRMAN
DATE SPECIAL PERMIT APP'D	DIRECTOR OF COMMUNITY DEVELOPMENT
FILE NO.	

LEGEND

- CATCH BASIN
- MANHOLE
- STORM DRAIN
- SANITARY
- WATER
- FIRE HYDRANT
- FLARED END
- CONDUITS
- ELECTRIC
- GAS
- TELEPHONE

LADA, P.C.
Land Planners
104 West Street
Simsbury, CT 06070 (860) 651-4971
1457 Hartford Turnpike
Scotland, CT 06264 (860) 423-4911
Glastonbury, CT 06033 (860) 659-0556
Stonington, CT 06378 (860) 535-1560
Stonington, NY 10508 (845) 278-7454

JWM Architectural Group

DUTTON ASSOCIATES, LLC
LAND SURVEYORS AND CIVIL ENGINEERS
67 EASTERN BOULEVARD
GLASTONBURY, CONNECTICUT 06033
TEL: 860-633-4647 FAX: 860-633-3880
EMAIL: MAIL@DUTTONASSOCIATES.COM

CLARK ENGINEERING
CIVIL ENGINEERING
26 BUSHY HILL ROAD, P.O. BOX 419
GRANBY, CT 06035-0419
TELE: (860) 653-4352
FAX: (860) 653-0415

FRESHWATER WETLAND SERVICES
P.O. BOX 233
GRANVILLE, MA 01034
TELE: (413) 569-2195
freshwaterwetland@gmail.com

Developer:
THE CASLE CORPORATION
200 FISHER DRIVE
AVON, CONNECTICUT
DESIGN BUILDER
CASLE

Date	Description	No.
Revisions		
10/30/13	Mylar Filing	
07/31/13	ZONING	

Phase 1 Utility Plan

Glastonbury Gateway IV

Western Boulevard

Glastonbury, Connecticut

Project: 1972
Scale: 1"=30'
Date: 07/11/13
Drawn by: CB
Checked by: PED
Drawing No.
L-11a

O:\CIVIL\1972 casle gateway iv\DWGS\1972 Utility Phase1.dwg L-11a Phase 1 Utility Plan\dcbzaxis October 30, 2013

StormTech®
Detention • Retention • Recharge
Subsurface Stormwater Management℠

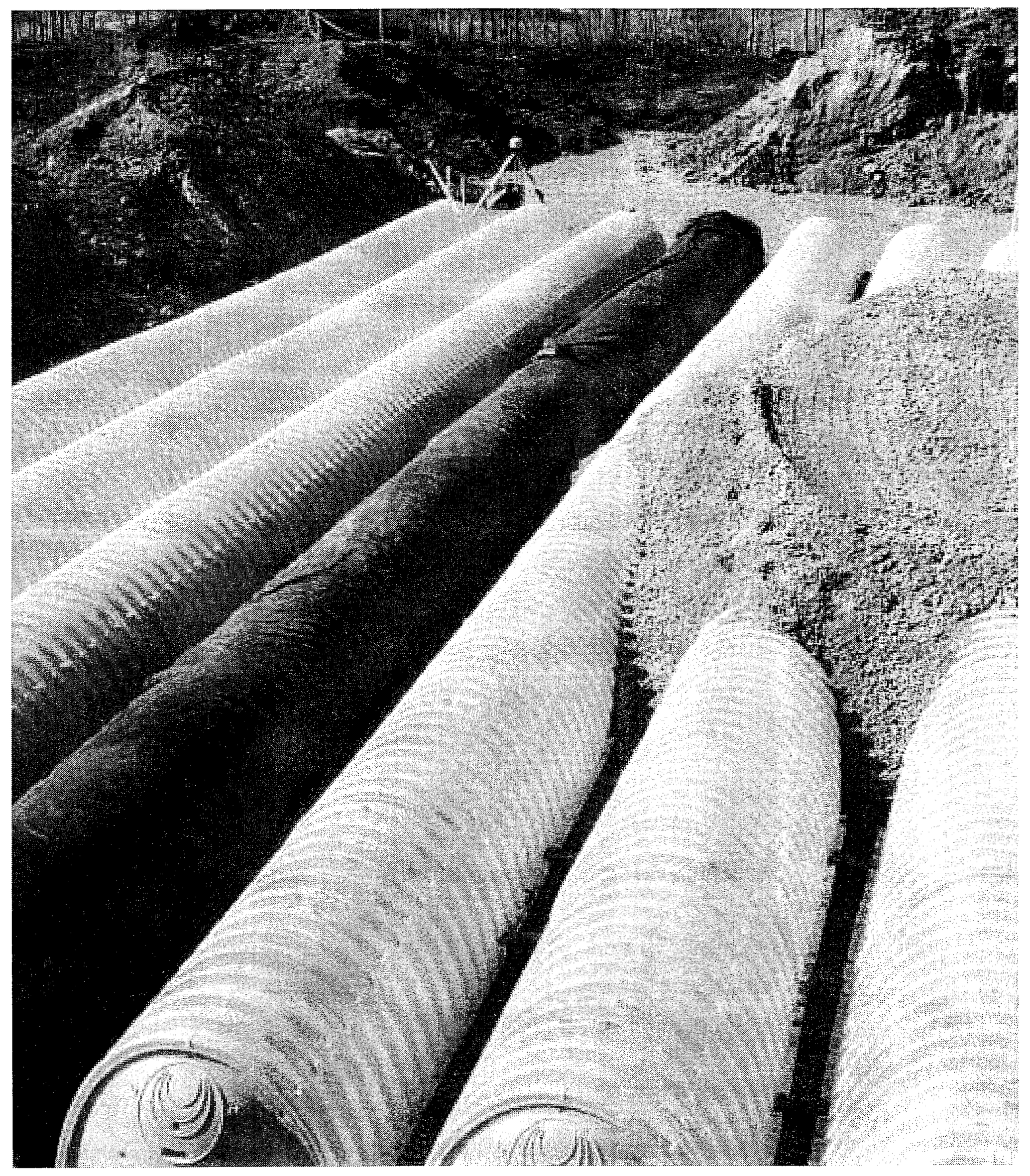

Isolator™ Row O&M Manual

StormTech® Chamber System for Stormwater Management

2.0 Isolator Row Inspection/Maintenance

StormTech®

2.1 INSPECTION

The frequency of Inspection and Maintenance varies by location. A routine inspection schedule needs to be established for each individual location based upon site specific variables. The type of land use (i.e. industrial, commercial residential), anticipated pollutant load, percent imperviousness, climate, etc. all play a critical role in determining the actual frequency of inspection and maintenance practices.

At a minimum, StormTech recommends annual inspections. Initially, the Isolator Row should be inspected every 6 months for the first year of operation. For subsequent years, the inspection should be adjusted based upon previous observation of sediment deposition.

The Isolator Row incorporates a combination of standard manhole(s) and strategically located inspection ports (as needed). The inspection ports allow for easy access to the system from the surface, eliminating the need to perform a confined space entry for inspection purposes.

If upon visual inspection it is found that sediment has accumulated, a stadia rod should be inserted to determine the depth of sediment. When the average depth of sediment exceeds 3 inches throughout the length of the Isolator Row, clean-out should be performed.

2.2 MAINTENANCE

The Isolator Row was designed to reduce the cost of periodic maintenance. By "isolating" sediments to just one row, costs are dramatically reduced by eliminating the need to clean out each row of the entire storage bed. If inspection indicates the potential need for maintenance, access is provided via a manhole(s) located on the end(s) of the row for cleanout. If entry into the manhole is required, please follow local and OSHA rules for a confined space entries.

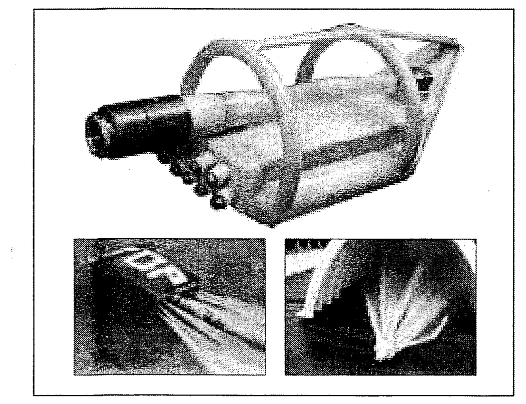

Examples of culvert cleaning nozzles appropriate for Isolator Row maintenance. (These are not StormTech products.)

Maintenance is accomplished with the JetVac process. The JetVac process utilizes a high pressure water nozzle to propel itself down the Isolator Row while scouring and suspending sediments. As the nozzle is retrieved, the captured pollutants are flushed back into the manhole for vacuuming. Most sewer and pipe maintenance companies have vacuum/JetVac combination vehicles. Selection of an appropriate JetVac nozzle will improve maintenance efficiency. Fixed nozzles designed for culverts or large diameter pipe cleaning are preferable. Rear facing jets with an effective spread of at least 45" are best. Most JetVac reels have 400 feet of hose allowing maintenance of an Isolator Row up to 50 chambers long. **The JetVac process shall only be performed on StormTech Isolator Rows that have AASHTO class 1 woven geotextile (as specified by StormTech) over their angular base stone.**

StormTech Isolator Row (not to scale)

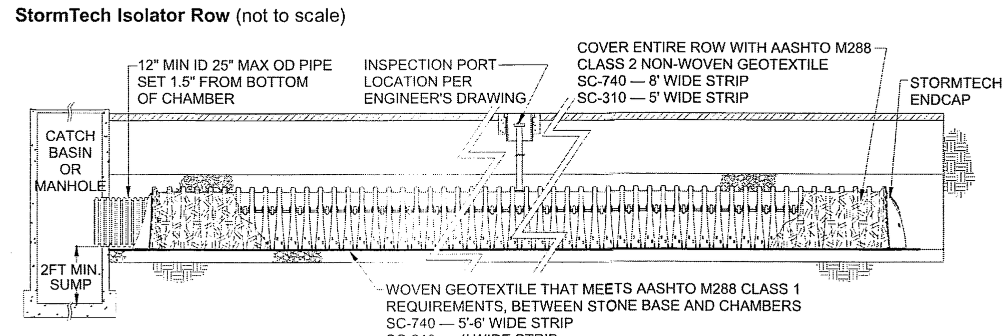

1.0 The Isolator™ Row

1.1 INTRODUCTION

An important component of any Stormwater Pollution Prevention Plan is inspection and maintenance. The StormTech Isolator Row is a patent pending technique to inexpensively enhance Total Suspended Solids (TSS) removal and provide easy access for inspection and maintenance.

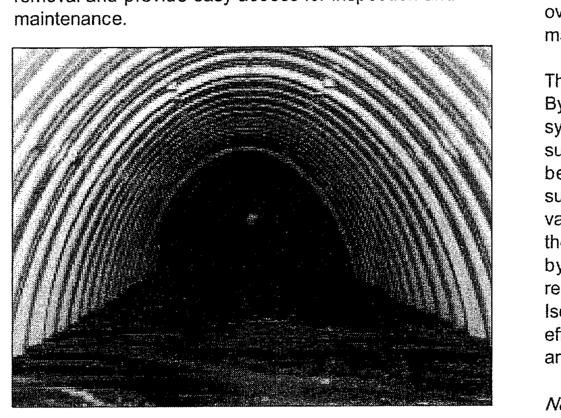

Looking down the Isolator Row from the manhole opening, woven geotextile is shown between the chamber and stone base.

1.2 THE ISOLATOR™ ROW

The Isolator Row is a row of StormTech chambers, either SC-740 or SC-310 models, that is surrounded with filter fabric and connected to a closely located manhole for easy access. The fabric-wrapped chambers provide for settling and filtration of sediment as storm water rises in the Isolator Row and ultimately passes through the filter fabric. The open bottom chambers and perforated sidewalls allow storm water to flow both vertically and horizontally out of the chambers. Sediments are captured in the Isolator Row protecting the storage areas of the adjacent stone and chambers from sediment accumulation.

Two different fabrics are used for the Isolator Row. A woven geotextile fabric is placed between the stone and the Isolator Row chambers. The tough geotextile provides a media for storm water filtration and provides a durable surface for maintenance operations. It is also designed to prevent scour of the underlying stone and remain intact during high pressure jetting. A non-woven fabric is placed over the chambers to provide a filter media for flows passing through the perforations in the sidewall of the chamber.

The Isolator Row is typically designed to capture the "first flush" and offers the versatility to be sized on a volume basis or flow rate basis. An upstream manhole not only provides access to the Isolator Row but typically includes a high flow weir such that storm water flowrates or volumes that exceed the capacity of the Isolator Row overtop the over flow weir and discharge through a manifold to the other chambers.

The Isolator Row may also be part of a treatment train. By treating storm water prior to entry into the chamber system, the service life can be extended and pollutants such as hydrocarbons can be captured. Pre-treatment best management practices can be as simple as deep sump catch basins, oil-water separators or can be innovative storm water treatment devices. The design of the treatment train and selection of pretreatment devices by the design engineer is often driven by regulatory requirements. Whether pretreatment is used or not, the Isolator Row is recommended by StormTech as an effective means to minimize maintenance requirements and maintenance costs.

Note: See the StormTech Design Manual for detailed information on designing inlets for a StormTech system, including the Isolator Row.

StormTech Isolator Row with Overflow Spillway (not to scale)

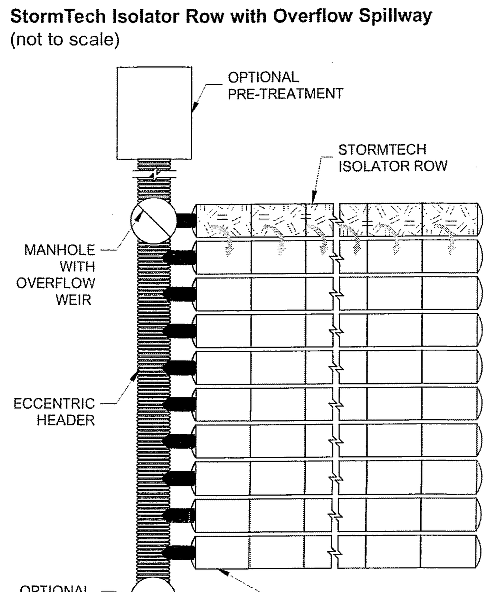

3.0 Isolator Row Step By Step Maintenance Procedures

Step 1) Inspect Isolator Row for sediment
- A) Inspection ports (if present)
  - i. Remove lid from floor box frame
  - ii. Remove cap from inspection riser
  - iii. Using a flashlight and stadia rod, measure depth of sediment and record results on maintenance log.
  - iv. If sediment is at, or above, 3 inch depth proceed to Step 2. If not proceed to step 3.
- B) All Isolator Rows
  - i. Remove cover from manhole at upstream end of Isolator Row
  - ii. Using a flashlight, inspect down Isolator Row through outlet pipe
    1. Mirrors on poles or cameras may be used to avoid a confined space entry
    2. Follow OSHA regulations for confined space entry if entering manhole
  - iii. If sediment is at or above the lower row of sidewall holes (approximately 3 inches) proceed to Step 2. If not proceed to Step 3.

StormTech Isolator Row (not to scale)

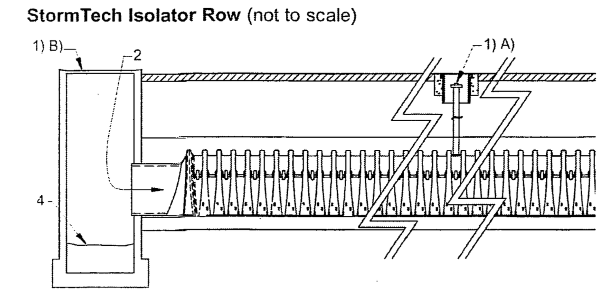

Step 2) Clean out Isolator Row using the JetVac process
- A) A fixed culvert cleaning nozzle with rear facing nozzle spread of 45 inches or more is preferable
- B) Apply multiple passes of JetVac until backflush water is clean
- C) Vacuum manhole sump as required

Step 3) Replace all caps, lids and covers, record observations and actions

Step 4) Inspect & clean catch basins and manholes upstream of the StormTech system

Sample Maintenance Log

Date	Stadia Rod Readings: Fixed point to chamber bottom (1)	Stadia Rod Readings: Fixed point to top of sediment (2)	Sediment Depth (1) - (2)	Observations/Actions	Inspector
3/15/01	6.3 ft.	none		New installation. Fixed point is CI frame at grade	djm
9/24/01		6.2	0.1 ft.	Some grit felt	sm
6/20/03		5.8	0.5 ft.	Mucky feel, debris visible in manhole and in Isolator row, maintenance due	rv
7/7/03	6.3 ft.		0	System jetted and vacuumed	djm

StormTech®
Detention • Retention • Recharge
Subsurface Stormwater Management℠

20 Beaver Road, Suite 104 | Wethersfield | Connecticut | 06109
860.529.8188 | 888.892.2694 | fax 866.328.8401 | www.stormtech.com

StormTech products are covered by one or more of the following patents: U.S. Patents: 5,401,459; 5,511,903; 5,716,163; 5,588,778; 5,839,844; Canadian Patents: 2,158,418 Other U.S. and Foreign Patents PendingPrinted in U.S.A.
© Copyright. All rights reserved. StormTech LLC, 2004

S090104-1

PURPOSE:

The purpose of this detail sheet is to provide a list of scheduled inspection and maintenance activities for the stormwater management system as required by the Town of Glastonbury.

RESPONSIBLE PARTY:

The entity responsible for the operation and maintenance of the stormwater management system is the owner of the property. If the land is transferred, the responsibility will pass to the new owner.

Owner/Contact Person:
David Sessions
c/o The Casle Corporation
200 Fisher Drive
Avon, CT 06001
Telephone: 860-674-9000
Fax: 860-676-8576

STORMWATER MANAGEMENT SYSTEM:

The stormwater management system consists of catch basin inlet structures with four-foot-deep sumps, a pipe conveyance system, a detention basin, two stormwater infiltration systems with an "Isolator Row." Refer to the "As-Built Plan and the Construction Detail Plans for the location of the stormwater management system and the construction of its components.

GATEWAY I EXPANSION / THE CASLE CORPORATION	PE - PLANNED EMPLOYMENT
PROJECT / APPLICANT	ZONE
300-310 & 320-330 WESTERN BOULEVARD	
PROJECT ADDRESS	
SPECIAL PERMIT SECTION	TPZ CHAIRMAN
DATE SPECIAL PERMIT APP'D	DIRECTOR OF COMMUNITY DEVELOPMENT
FILE NO.	

LADA, P.C.
Land Planners
104 West Street
Simsbury, CT 06070 (860) 651-4971
2050 Route 22 (Suite 106)
Brewster, NY 10509 (845) 278-7424

JWM Architectural Group

DUTTON ASSOCIATES, LLC
LAND SURVEYORS AND CIVIL ENGINEERS

CLARK ENGINEERING
CIVIL ENGINEERING
26 BUSHY HILL ROAD, P.O. BOX 419
GRANBY, CT 06035-0419
TELE: (860) 653-4352
FAX: (860) 653-0415

FRESHWATER WETLAND SERVICES
P.O. BOX 233
GRANVILLE, MA 01034
TELE: (413) 695-2195
freshwaterwetland@gmail.com

Developer:
THE CASLE CORPORATION
200 FISHER DRIVE
AVON, CONNECTICUT
DESIGN BUILDER
CASLE

Date	Description	No.
10/30/13	MYLAR FILING	
07/31/13	ZONING	

Revisions

Stormwater System Operations and Management Plan

Glastonbury Gateway IV

Western Boulevard
Glastonbury, Connecticut

Project: 1972
Scale: None
Date: 07/11/13
Drawn by: CB
Checked by: PFP
Drawing No.

L-11b

O:\C1\PIP\1972 casle gateway iv\DWG\1972 Stormwater Operations.dwg\L-11b Stormwater System Operations and Management Plan\cbarzola\October 30, 2013

STORMWATER MANAGEMENT SYSTEM INSPECTION FORM-PHASE 1

YEAR: INSPECTOR:

	Drainage Structure	Task	Date Inspected	Inspection Comments	Date Cleaned
ANNUALLY	All manhole structures (Structures without sumps)	1. Remove any sediment or debris. 2. Check for signs of spalling, loss of parging or joint material, or exposed re-bar. 3. Check for signs of leaks. 4. Check for signs deterioration of the riser section directly under the manhole (or catch basin) frame.			
ANNUALLY	All catch basins and area drains. (Structures with sumps)	1. Clean the catch basin sumps (Vacuum Service Company) 2. Check for signs of spalling, loss of parging or joint material, or exposed re-bar. 3. Check for signs of leaks. 4. Check for signs deterioration of the riser section directly under the catch basin top.			
ANNUALLY	Detention Basin #1	1. Inspect the open detention basins for erosion and repair as necessary. 2. Inspect for unwanted vegetation such as woody vegetation growing in the basin or the berms forming the basin. Remove vegetation as necessary.			
	Detention Basin #1 Outlet Structure	1. Open structure and look for any indications of high water in the structure. 2. Inspect the outlet opening for any blockage or debris. 3. Remove any sediment or debris using a Vacuum Service Company. 4. Inspect and note any deficiencies.			
ANNUALLY	Infiltration System #1 & #2 Outlet Structure	1. Open manhole cover and look for any indications of high water in the structure. 2. Inspect the weir for any blockage or debris. 3. Remove any sediment or debris using a Vacuum Service Company. 4. Inspect and note any deficiencies.			
ANNUALLY	Rip Rap Pads	1. Inspect and remove sediment as needed. 2. Repair rip rap as needed.			
	Lined Channel	1. Inspect channels for erosion and repair as necessary. 2. Inspect for unwanted vegetation such as woody vegetation growing in the channels. Remove vegetation as necessary.			
BIANNUALLY	Infiltration system #1 & #2 Isolator Rows	1. See attached Isolator Row O & M Manual (attached) prepared by StormTech and Isolator Row Maintenance Log.			

Item/Area	Task	Date	Inspection Comments

Other Comments:

Refer to the "As-Built" Plan and the Construction Detail Plans for the location of the stormwater management system and the construction of its components.

STORMWATER MANAGEMENT SYSTEM INSPECTION FORM-PHASE 2

YEAR: INSPECTOR:

	Drainage Structure	Task	Date Inspected	Inspection Comments	Date Cleaned
ANNUALLY	All manhole structures (Structures without sumps)	1. Remove any sediment or debris. 2. Check for signs of spalling, loss of parging or joint material, or exposed re-bar. 3. Check for signs of leaks. 4. Check for signs deterioration of the riser section directly under the manhole (or catch basin) frame.			
ANNUALLY	All catch basins and area drains. (Structures with sumps)	1. Clean the catch basin sumps (Vacuum Service Company) 2. Check for signs of spalling, loss of parging or joint material, or exposed re-bar. 3. Check for signs of leaks. 4. Check for signs deterioration of the riser section directly under the catch basin top.			
ANNUALLY	Detention Basin #2	1. Inspect the open detention basins for erosion and repair as necessary. 2. Inspect for unwanted vegetation such as woody vegetation growing in the basin or the berms forming the basin. Remove vegetation as necessary.			
	Detention Basin #2 Outlet Structure	1. Open structure and look for any indications of high water in the structure. 2. Inspect the outlet opening for any blockage or debris. 3. Remove any sediment or debris using a Vacuum Service Company. 4. Inspect and note any deficiencies.			
ANNUALLY	Infiltration System #3, 4, 5 & #6 Outlet Structures	1. Open manhole cover and look for any indications of high water in the structure. 2. Inspect the weir for any blockage or debris. 3. Remove any sediment or debris using a Vacuum Service Company. 4. Inspect and note any deficiencies.			
ANNUALLY	Rip Rap Pads	1. Inspect and remove sediment as needed. 2. Repair rip rap as needed.			
	Lined Channel	1. Inspect channels for erosion and repair as necessary. 2. Inspect for unwanted vegetation such as woody vegetation growing in the channels. Remove vegetation as necessary.			
BIANNUALLY	Infiltration system #3, 4, 5 & #6 Isolator Rows	1. See attached Isolator Row O & M Manual (attached) prepared by StormTech and Isolator Row Maintenance Log.			

Item/Area	Task	Date	Inspection Comments

Other Comments:

Refer to the "As-Built" Plan and the Construction Detail Plans for the location of the stormwater management system and the construction of its components.

STORMTECH ISOLATOR ROW INSPECTION FORM

Date:	Stadia Rod Readings: Fixed Point to Chamber Bottom (1)	Stadia Rod Readings: Fixed Point to Top of Sediment (2)	Sediment Depth (1)-(2)	Observations/Actions	Inspector

NOTE:

COPY LISTS AS NEEDED.

LADA, P.C.
Land Planners
104 West Street
Simsbury, CT 06070 (860) 651-4071
3950 Roscoe Rd (Suite 100)
Brewster, NY 10509 (845) 219-7424

JWM Architectural Group

DUTTON ASSOCIATES, LLC
LAND SURVEYORS AND CIVIL ENGINEERS
97 EASTON ROADWAY
GLASTONBURY, CONNECTICUT 06033
TEL: 860-633-4640 FAX: 860-633-4650
EMAIL: AARON@THEDUTTONS.COM

CLARK ENGINEERING
CIVIL ENGINEERING
26 BUSHY HILL ROAD, P.O. BOX 419
GRANBY, CT 06035-0419
TELE: (860) 653-4362
FAX: (860) 653-0415

FRESHWATER WETLAND SERVICES
P.O. BOX 233
GRANVILLE, MA 01034
TELE: (413) 696-2195
freshwaterwetland@gmail.com

Developer:
THE CASLE CORPORATION
200 FISHER DRIVE
AVON, CONNECTICUT
DESIGN BUILDER
CASLE

10/30/13	Mylar Filing	
07/31/13	ZONING	

Stormwater System Operations and Management Plan

Glastonbury Gateway IV

Western Boulevard

Glastonbury, Connecticut

	None
	10/30/13
	CB

L-11c

GATEWAY I EXPANSION / THE CASLE CORPORATION — PE - PLANNED EMPLOYMENT
PROJECT / APPLICANT — ZONE
300-310 & 320-330 WESTERN BOULEVARD
PROJECT ADDRESS
SPECIAL PERMIT SECTION — TPZ CHAIRMAN
DATE SPECIAL PERMIT APP'D — DIRECTOR OF COMMUNITY DEVELOPMENT
FILE NO.

O:\CTPW\1972 casle gateway iv\DWG\1972 Stormwater Operations.dwg \L-11c Stormwater System Operations and Management Plan\Oct30\Oct30.dwg 10/30/2013

TYPE "C" & "C-L" CATCH BASIN - PRECAST CONCRETE DETAIL

(NOT TO SCALE)

WHERE A.D.A. GRATE IS SPECIFIED FOR A TYPE "C-L" BASIN, USE CATCH BASIN GRATE-TYPE ADA AS MANUFACTURED BY UNITED CONCRETE PRODUCTS, INC, OR EQUIVALENT.

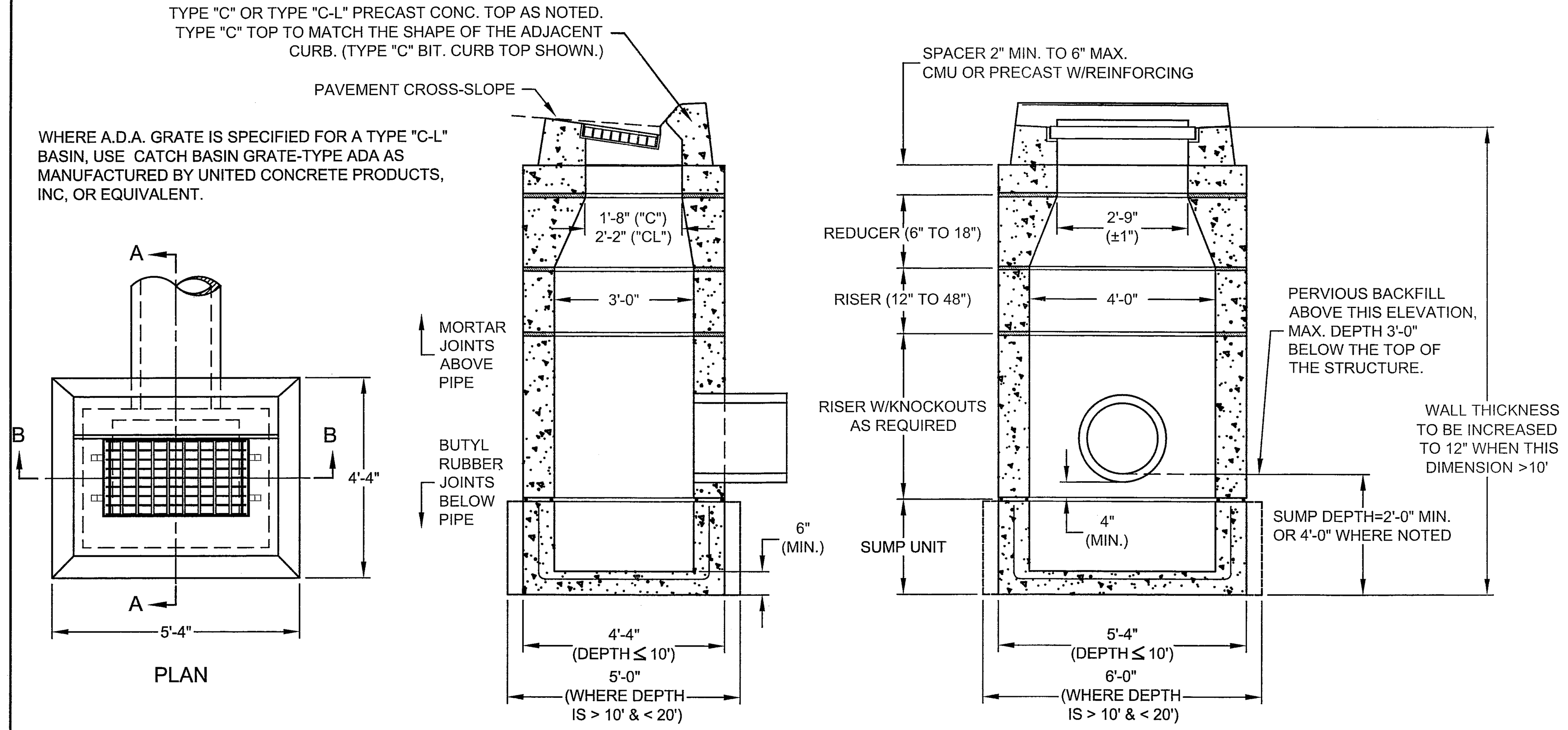

CATCH BASIN MATERIALS AND CONSTRUCTION TO COMPLY WITH CONNDOT FORM 816

STONE BARRIER (PERMANENT) DETAIL

(NOT TO SCALE)

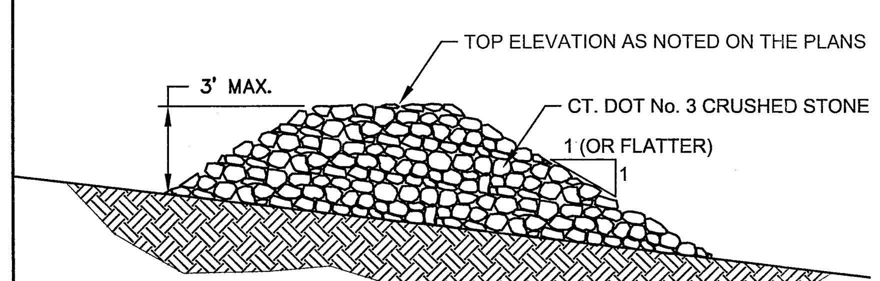

NOTES:

1. THE BARRIER SHALL BE CONSTRUCTED SO WATER CANNOT PASS AROUND THE ENDS.
2. REPAIR OR REPLACE PROMPTLY AS NEEDED.
3. THE BARRIER SHALL BE REMAIN AFTER CONSTRUCTION IS COMPLETED.

GRASS LINED CHANNEL DETAIL - MOWING NOT REQUIRED

(NOT TO SCALE)

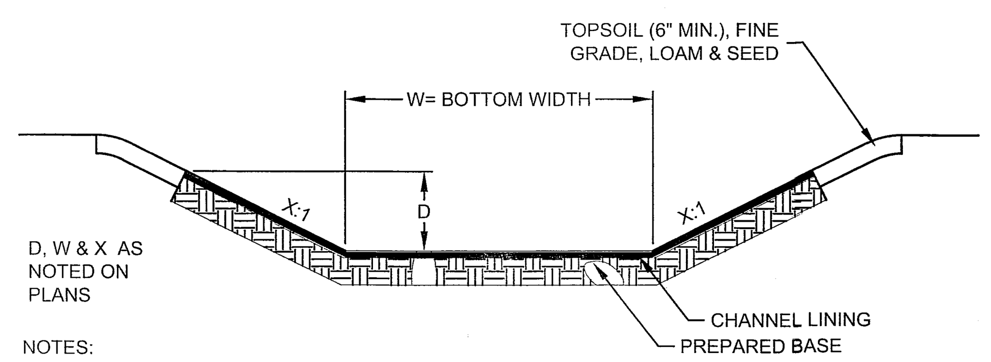

NOTES:

1. PREPARATION OF CHANNEL AREA TO COMPLY WITH SECTION 9.50 OF CONNDOT FORM 816.
2. SEED MIXTURE TO BE:

CREEPING RED FESCUE (PENNLAWN, WINTERGREEN)	2.1 LBS/1,000 SQ.FT.
REDTOP (STREEKER, COMMON)	0.2 LBS/1,000 SQ.FT.
OR FLATPEA (LATHCO) WITH INNOCULANT	3.5 LBS/1,000 SQ.FT.

3. CHANNEL TO BE LINED WITH AN EROSION CONTROL MATTING (ECM) CONFORMING TO FORM 816 AND APPROVED BY CONNDOT FOR CLASS 2: FLEXIBLE CHANNEL LINER PROTECTION
   PERMANENT - TYPE H (NORTH AMERICAN GREEN P300 OR EQUIVALENT)
   TEMPORARY - TYPE E (NORTH AMERICAN GREEN C125 OR EQUIVALENT)
   INSTALL AS PER THE MANUFACTURERS INSTRUCTIONS.

TYPICAL SANITARY & STORM DRAIN MANHOLE PRECAST CONCRETE UNITS

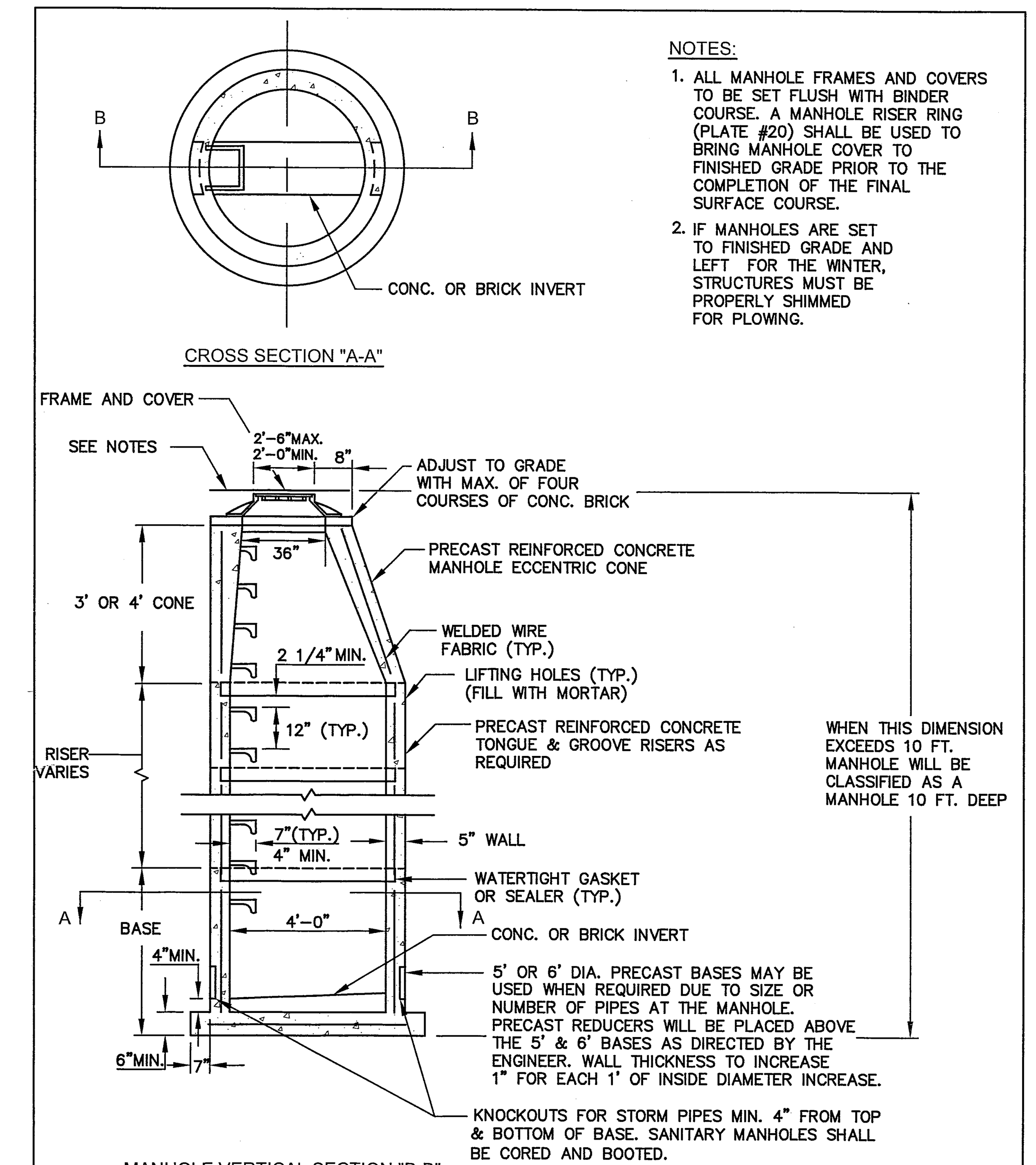

NOTES:

1. ALL MANHOLE FRAMES AND COVERS TO BE SET FLUSH WITH BINDER COURSE. A MANHOLE RISER RING (PLATE #20) SHALL BE USED TO BRING MANHOLE COVER TO FINISHED GRADE PRIOR TO THE COMPLETION OF THE FINAL SURFACE COURSE.
2. IF MANHOLES ARE SET TO FINISHED GRADE AND LEFT FOR THE WINTER, STRUCTURES MUST BE PROPERLY SHIMMED FOR PLOWING.

		REV.	S.R.	04/05
TOWN OF GLASTONBURY Glastonbury, Connecticut			BY	DATE
		DRAWN	C.F.S.	04/97
		CHECKED	R.S.	4/05
TYPICAL SANITARY & STORM DRAIN MANHOLE PRECAST CONCRETE UNITS		SCALE		
		N.T.S.		
		DATE	DATE	
		SHEET 1 OF 1		

\ARCHIVE\DETAILS\GLAST\San&StormMH05

GENERAL UTILITY NOTES:

1. The Contractor shall use "CALL BEFORE YOU DIG, 1-800-922-4455" prior to any construction activity.
2. Construction methods and materials, shall conform to the regulations of the Town of Glastonbury, CONNDOT Form 816, and the M.D.C..
3. The Contractor shall verify all lines and grades prior to any construction. Any discrepancies shall be brought to the attention of the Engineer.
4. The Contractor shall be responsible for obtaining and incurring the cost of all required permits, inspections, certificates, etc.
5. The Contractor is solely responsible for jobsite safety and shall comply with all Federal and State Occupational Safety and Health Authority (O.S.H.A.) regulations.
6. All exposed curb ends are to be tapered.
7. Saw cut existing curbs and pavement where they meet proposed curbs or pavement.

SANITARY SEWER NOTES:

1. Sanitary sewer pipe to be PVC, ASTM D 3034-73 SDR-35, size and slope as noted.
2. Sanitary laterals less than four (4) feet in depth will require rigid foam insulation as directed.

STORM DRAINAGE NOTES:

1. Storm sewer pipe to be:

C.P.E.P	Corrugated Polyethylene Pipe
C.P.E.P.-P	Corrugated Polyethylene Pipe perforated
C.P.E.P.-S	Corrugated Polyethylene Pipe with a smooth interior
C.P.E.P.-SP	Corrugated Polyethylene Pipe with a smooth interior, perforated

2. C.P.E.P.-S Pipe to have bell-and-spigot connections with a rubber gasket meeting ASTM F477. Where pipe is noted as "Water-Tight, it shall meet the requirements of ASTM D3212 and ASTM F1417.
3. Construction of storm drainage systems shall normally begin at the downstream end and proceed upstream.
4. All locations, including swales, lawn/landscaped areas, detention basins, and other storm sewer discharge points, that are to receive a concentrated flow of stormwater, originating from surface flow or storm sewer systems, shall be stabilized and protected from erosion prior to receiving the water.

GEOTEXTILES AND EROSION CONTROL MATTING (ECM)

1. Unless otherwise indicated, geotextiles and erosion control matting shall be approved for use by ConnDOT for the intended use.

STORM SEWER TRENCH DETAIL

(NOT TO SCALE)

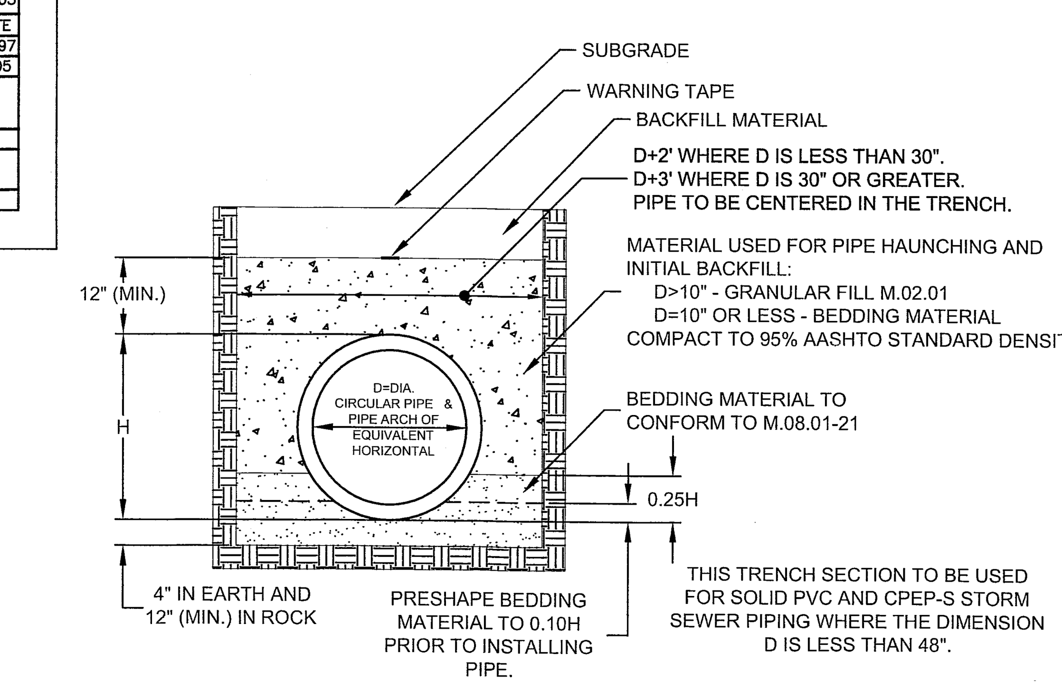

THIS TRENCH SECTION TO BE USED FOR SOLID PVC AND CPEP-S STORM SEWER PIPING WHERE THE DIMENSION D IS LESS THAN 48".

TYPE C RIP RAP APRON DETAIL

(NOT TO SCALE)

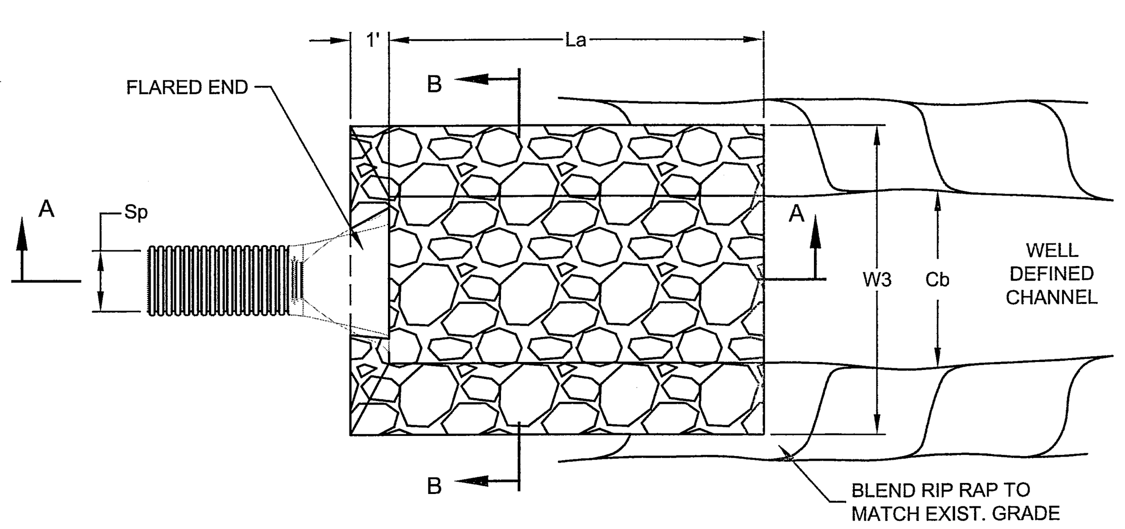

CULVERT END - PLAN VIEW

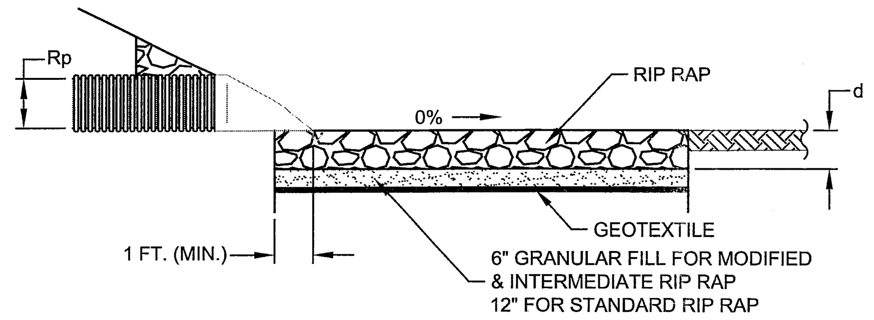

SECTION A-A

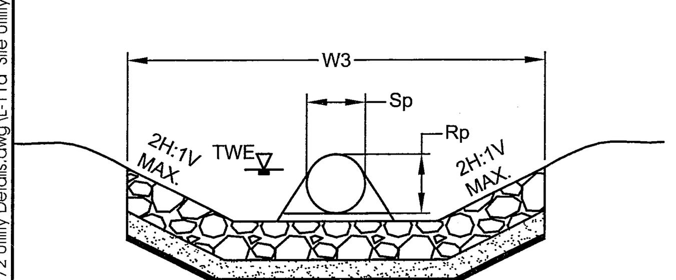

SECTION B-B

LEGEND

Cb =	CHANNEL BOTTOM
TWE =	TAILWATER ELEVATION
Sp =	MAX. INSIDE PIPE SPAN
Rp =	MAX. INSIDE PIPE RISE
La =	LENGTH OF RIP RAP APRON MEASURED FROM THE END OF THE CULVERT END SECTION
d =	(12 IN.) MODIFIED RIP RAP (18 IN.) INTERMEDIATE RIP RAP (36 IN.) STANDARD RIP RAP
W3 = USE WHICH EVER IS GREATER	3S 2(Z) (TWE+1')+Cb 2(Z) (0.7 Rp)+Cb

Z	CHANNEL SIDE SLOPE
2	2H : 1V
3	3H : 1V
4	4H : 1V
5	5H : 1V
6	6H : 1V

TYPE A OR B RIP RAP APRON DETAIL

(NOT TO SCALE)

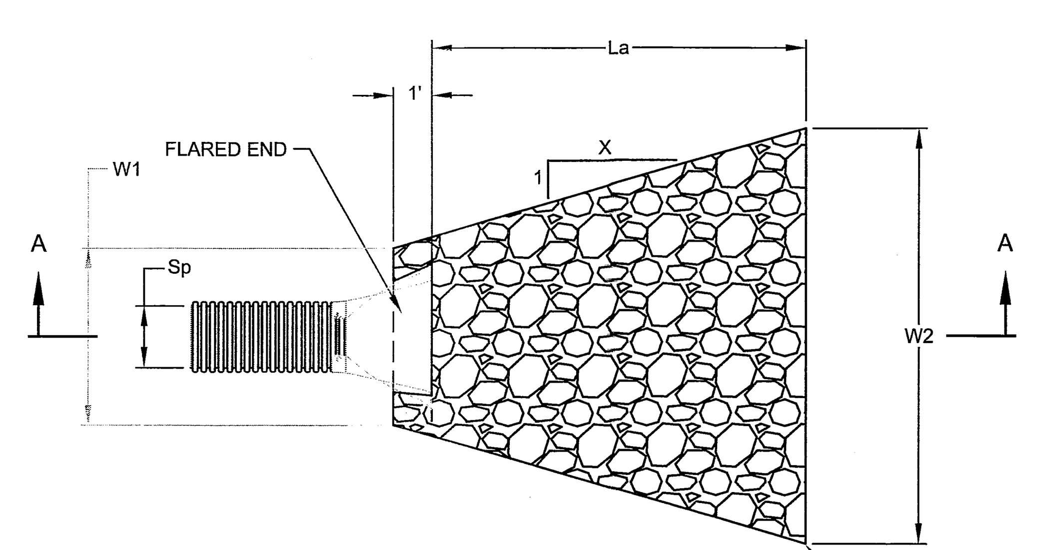

CULVERT END - PLAN VIEW

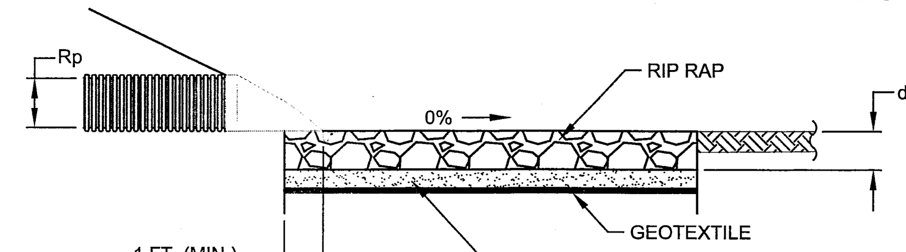

SECTION A-A

	X	W1	W2
Type A Rip Rap Apron	3	3Sp	3Sp+0.7 La
Type B Rip Rap Apron	5	3Sp	3Sp+0.4 La

LEGEND

Sp =	MAX. INSIDE PIPE SPAN
Rp =	MAX. INSIDE PIPE RISE
La =	LENGTH OF RIP RAP APRON MEASURED FROM THE END OF THE CULVERT END SECTION
d =	(12 IN.) MODIFIED RIP RAP (18 IN.) INTERMEDIATE RIP RAP (36 IN.) STANDARD RIP RAP

LEVEL SPREADER DETAIL

(NOT TO SCALE)

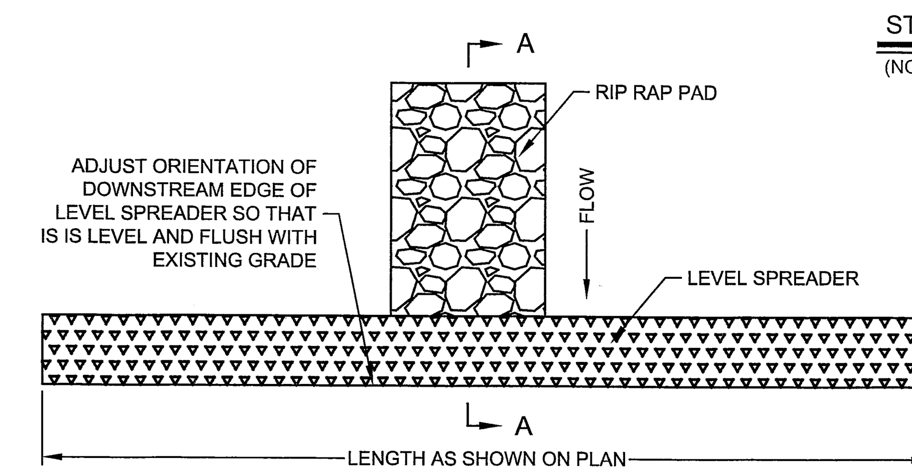

PLAN

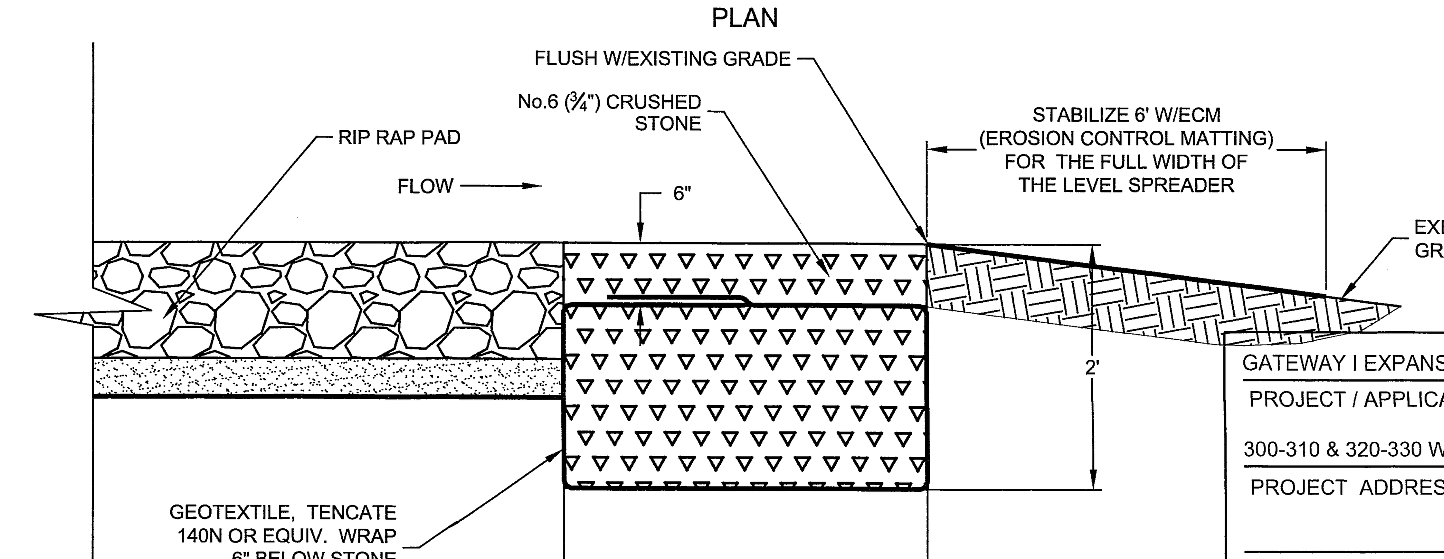

SECTION A-A

GATEWAY I EXPANSION / THE CASLE CORPORATION	PE - PLANNED EMPLOYMENT
PROJECT / APPLICANT	ZONE
300-310 & 320-330 WESTERN BOULEVARD	
PROJECT ADDRESS	
SPECIAL PERMIT SECTION	TPZ CHAIRMAN
DATE SPECIAL PERMIT APP'D	DIRECTOR OF COMMUNITY DEVELOPMENT
FILE NO.	

LADA, P.C.
Land Planners
104 West Street
Simsbury, CT 06070 (860) 651-4971
2050 Route 22 (Suite 106)
Brewster, NY 10509 (845) 278-7424

JWM Architectural Group

DUTTON ASSOCIATES, LLC
LAND SURVEYORS AND CIVIL ENGINEERS
67 EASTERN BOULEVARD
GLASTONBURY, CONNECTICUT 06033
TEL: 860-633-8401 FAX: 860-633-8881

CLARK ENGINEERING
CIVIL ENGINEERING
26 BUSHY HILL ROAD, P.O. BOX 419
GRANBY, CT 06035-0419
TELE: (860) 653-4352
FAX: (860) 653-0415

FRESHWATER WETLAND SERVICES
P.O. BOX 233
GRANVILLE, MA 01034
TELE: (413) 695-2195
freshwaterwetland@gmail.com

Developer:
THE CASLE CORPORATION
200 FISHER DRIVE
AVON, CONNECTICUT
DESIGN BUILDER
CASLE

Date	Description	No.
10/30/13	Mylar Filing	
07/31/13	ZONING	

Revisions

Site Utility Details

Glastonbury Gateway IV

Western Boulevard

Glastonbury, Connecticut

Project: 1972
Scale: None
Date: 07/11/13
Drawn by: CB
Checked by: PED
Drawing No.
L-11d

O:\CTPP\1972 casle gateway iv\DWG\1972 Utility Details.dwg\L-11d Site Utility Details\cbarzola\October 30, 2013

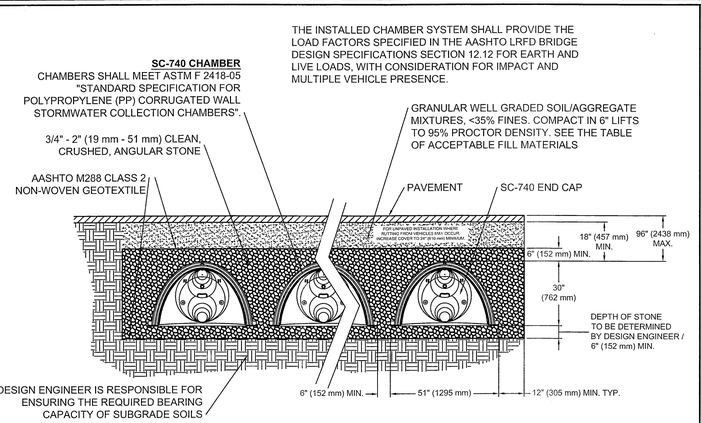

THIS CROSS SECTION DETAILS THE REQUIREMENTS NECESSARY TO SATISFY THE LOAD FACTORS SPECIFIED IN THE AASHTO LRFD BRIDGE DESIGN SPECIFICATIONS SECTION 12.12 FOR EARTH AND LIVE LOADS USING STORMTECH CHAMBERS

NOTE:
THIS DETAIL TO BE USED FOR INFILTRATION SYSTEMS #1, 2, 3, 4, 5, & #6

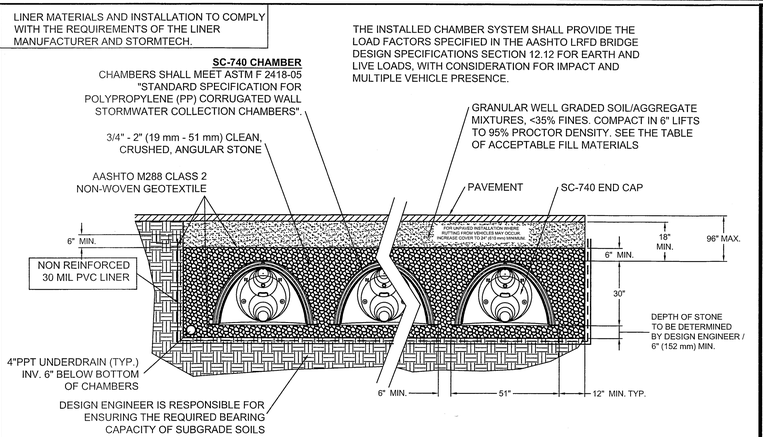

THIS CROSS SECTION DETAILS THE REQUIREMENTS NECESSARY TO SATISFY THE LOAD FACTORS SPECIFIED IN THE AASHTO LRFD BRIDGE DESIGN SPECIFICATIONS SECTION 12.12 FOR EARTH AND LIVE LOADS USING STORMTECH CHAMBERS

NOTE:
THIS DETAIL TO BE USED FOR DETENTION SYSTEM #1 ONLY

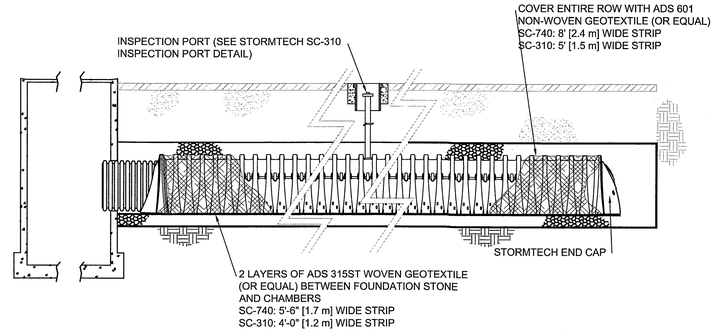

STORMTECH STANDARD DETAIL DISCLAIMER
STORMTECH STANDARD DETAILS DEMONSTRATE RECOMMENDATIONS FOR INSTALLATION AND/OR STANDARD DIMENSIONS OF STORMTECH PRODUCTS. STORMTECH DETAILS DO NOT SUPERSEDE ANY STATE OR LOCAL REGULATORY SPECIFICATIONS. IT IS THE RESPONSIBILITY OF THE CONSULTING ENGINEER TO ENSURE COMPLIANCE WITH ALL REGULATORY SPECIFICATIONS. STORMTECH HAS NOT AUTHORIZED, AND IS NOT RESPONSIBLE FOR ANY ALTERATIONS BY OTHERS TO STORMTECH STANDARD DETAILS.

StormTech Subsurface Stormwater Management
2 Boulder Road, Suite 101, Stratford, CT 06615
Phone: 800.848.3924, Fax: 203.377.8130
www.stormtech.com

SC-740 STANDARD CROSS-SECTION	
SCALE:	NTS
DATE:	11-7-08
DRAWN BY:	JLB
CHECKED:	

STORMTECH STANDARD DETAIL DISCLAIMER
STORMTECH STANDARD DETAILS DEMONSTRATE RECOMMENDATIONS FOR INSTALLATION AND/OR STANDARD DIMENSIONS OF STORMTECH PRODUCTS. STORMTECH DETAILS DO NOT SUPERSEDE ANY STATE OR LOCAL REGULATORY SPECIFICATIONS. IT IS THE RESPONSIBILITY OF THE CONSULTING ENGINEER TO ENSURE COMPLIANCE WITH ALL REGULATORY SPECIFICATIONS. STORMTECH HAS NOT AUTHORIZED, AND IS NOT RESPONSIBLE FOR ANY ALTERATIONS BY OTHERS TO STORMTECH STANDARD DETAILS.

StormTech Subsurface Stormwater Management
2 Boulder Road, Suite 101, Stratford, CT 06615
Phone: 800.848.3924, Fax: 203.377.8130
www.stormtech.com

SC-740 STANDARD CROSS-SECTION	
SCALE:	NTS
DATE:	11-7-08
DRAWN BY:	JLB
CHECKED:	

ADS ADVANCED DRAINAGE SYSTEMS, INC.

THE DESIGN ENGINEER SHALL REVIEW THIS DRAWING PRIOR TO CONSTRUCTION. IT IS THE ULTIMATE RESPONSIBILITY OF THE DESIGN ENGINEER TO ENSURE THAT THE PRODUCT(S) DEPICTED AND ALL ASSOCIATED DETAILS MEET ALL APPLICABLE LAWS, REGULATIONS, AND PROJECT REQUIREMENTS.

StormTech Subsurface Stormwater Management
70 INWOOD ROAD, SUITE 3 | ROCKY HILL, CT 06067
PHONE: 866-892-2694 | FAX: 866-328-8401
WWW.STORMTECH.COM

ISOLATOR™ ROW PROFILE	
SCALE:	NTS
DATE:	6/15/11
DRAWN BY:	KLJ
CHECKED:	

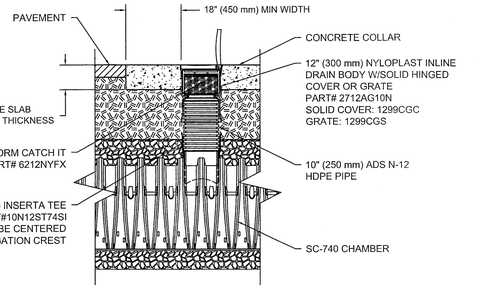

SC-740 INSPECTION PORT DETAIL
NTS

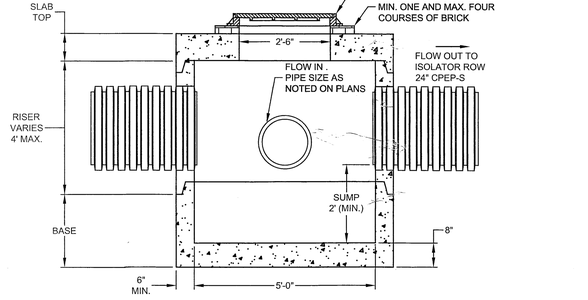

SECTION

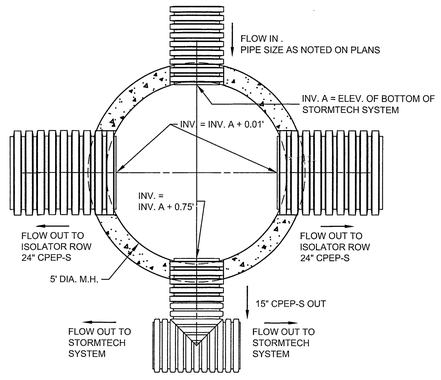

PLAN

NOTES:

1. THE PIPE CONFIGURATIONS VARY FROM STRUCTURE TO STRUCTURE. SEE SITE PLAN FOR NUMBER, LOCATION, AND DIRECTION OF INLET AND OUTLET PIPES.
2. DIVERSION STRUCTURE TO BE CONSTRUCTED AS A 5-FOOT DIAMETER (MIN.) MANHOLE WITHOUT AN INVERT.
3. MANHOLE MATERIALS AND CONSTRUCTION SHALL COMPLY WITH CT.D.O.T. SPECIFICATIONS EXCEPT AS NOTED.

DIVERSION STRUCTURE (D.S.) - TYPICAL - DETAIL
(NOT TO SCALE)

GATEWAY I EXPANSION / THE CASLE CORPORATION		PE - PLANNED EMPLOYMENT
PROJECT / APPLICANT		ZONE
300-310 & 320-330 WESTERN BOULEVARD		
PROJECT ADDRESS		
SPECIAL PERMIT SECTION	TPZ CHAIRMAN	
DATE SPECIAL PERMIT APP'D	DIRECTOR OF COMMUNITY DEVELOPMENT	
FILE NO.		

LADA, P.C. Land Planners
104 West Street, Simsbury, CT 06070 (860) 651-4911
3580 Route 22 (Suite 106), Brewster, NY 10509 (845) 278-7424

JWM Architectural Group

DUTTON ASSOCIATES, LLC
LAND SURVEYORS AND CIVIL ENGINEERS
67 EASTON ROAD
WATERBURY, CT 06705
TEL: 203-405-8400 FAX: 866-405-4400
EMAIL: JDUTTON@DUTTONASSOC.COM

CLARK ENGINEERING
CIVIL ENGINEERING
26 BUSHY HILL ROAD, P.O. BOX 419
GRANBY, CT 06035-0419
TELE: (860) 653-4302
FAX: (860) 653-0415

FRESHWATER WETLAND SERVICES
P.O. BOX 233
GRANVILLE, MA 01034
TELE: (413) 695-2195
freshwaterwetland@gmail.com

Developer: CASLE
THE CASLE CORPORATION
200 FISHER DRIVE
AVON, CONNECTICUT
DESIGN BUILDER

No.	Description	Date
	Revisions	
	Mylar Filing	10/30/13
	ZONING	07/31/13

Site Utility Details
Glastonbury Gateway IV
Western Boulevard
Glastonbury, Connecticut

Project:	1972
Scale:	None
Date:	07/11/13
Drawn by:	CB
Checked by:	PED
Drawing No.	L-11e

DRAWN: CHECKED: DATE: PROJECT #:
DESCRIPTION
REV. DATE CHK
ADS ADVANCED DRAINAGE SYSTEMS, INC. 4640 TRUEMAN BLVD HILLIARD, OHIO 43026 1-800-733-7473
THESE DRAWINGS AND SPECIFICATIONS, AS INSTRUMENTS OF SERVICE, ARE AND SHALL REMAIN THE PROPERTY OF STORMTECH. THEY ARE NOT TO BE USED FOR ANY PROJECT OTHER THAN THE SPECIFIC PROJECT FOR WHICH THEY HAVE BEEN PREPARED BY STORMTECH, AND THEY ARE NOT TO BE LOANED, COPIED OR REPRODUCED WITHOUT THE WRITTEN CONSENT OF STORMTECH. ALL RIGHTS ARE RESERVED BY STORMTECH.

SHEET OF

C:\CTDPR\1972 casle gateway I\DWG\1972 Utility Details.dwg\L-11e Site Utility Details\cbonsto\October 30, 2013