Attachment E

Registrant: Signature Flight Support

Date: 8/19/2014

Re: General Permit Registration Form for the Discharge of Stormwater and Dewatering from Construction Activities

Stormwater Pollution Control Plan
(SPCP)

for the Construction Activities
Associated with the

Fuel Storage Facility Modifications Project
Bradley International Airport, Windsor Locks, CT

Prepared for:
Signature Flight Support Corporation

Prepared by:
Currier and Company, Inc.

August, 2014

CURRIER & COMPANY
13323 W. Washington Blvd. Suite 206
Los Angeles, California 90066 310-279-5050

SECTION 1: SPCP INTRODUCTION – FUEL STORAGE FACILITY MODIFICATIONS....3

GENERAL.... 3
PLAN ORGANIZATION 3
REVISIONS TO THE SPCP 3

SECTION 2: SITE DESCRIPTION 4

SITE DESCRIPTION NARRATIVE 4
SITE PLAN 4

SECTION 3: CONSTRUCTION SEQUENCING....5

SECTION 4: CONTROL MEASURES 6

EROSION AND SEDIMENT CONTROL 6
Preserve and Control Soil 6
Stabilization Structures 6
Drainageways and Watercourses 7
Diversions.... 7
Subsurface Drains.... 8
Energy Dissipators.... 8
Barriers and Filters 9
Tire Tracked Soils.... 9
Maintenance 9
DEWATERING WASTEWATER CONTROL MEASURES.... 12

SECTION 5: INSPECTIONS AND MONITORING 12

PLAN IMPLEMENTATION INSPECTIONS 12
ROUTINE INSPECTIONS 13

SECTION 6: CONTRACTORS 13

GENERAL.... 13
CERTIFICATION STATEMENT.... 13

SECTION 6: OTHER CONTROLS 14

WASTE DISPOSAL.... 14
Material Handling 14
Solid and Liquid Waste Disposal.... 14
Hazardous Waste 14
Sanitary Waste 14
WASHOUT AREA.... 14

APPENDIX A: STORMWATER DISCHARGE REGISTRATION FORM AND GENERAL PERMIT FOR THE DISCHARGE OF STORMWATER AND DEWATERING WASTEWATERS FROM CONSTRUCTION ACTIVITIES....16

APPENDIX B: INSPECTION REPORT FORM 18

APPENDIX C: CONTRACTOR IDENTIFICATION AND CERTIFICATION 20

APPENDIX D: U.S. GEOLOGICAL SURVEY (USGS) QUADRANGLE MAP 24

APPENDIX E: U.S. FISH AND WILDLIFE SERVICE (USFWS) MAP AND DRAWINGS....26

APPENDIX F: PROJECT DRAWINGS 28

Section 1: SPCP Introduction – Fuel Storage Facility Modifications

General

Construction activities (including other land-disturbing activities) that disturb one acre or more are regulated under the National Pollutant Discharge Elimination System (NPDES) stormwater program. Under the authority of the Clean Water Act, the State of Connecticut General Permit for the Discharge of Stormwater and Dewatering Wastewaters from Construction Activities (General Permit), dated August 21, 2013 and effective on October 1, 2014, requires such activities to obtain coverage under the General Permit, and as a requirement of coverage under the permit, prepare and implement a Stormwater Pollution Control Plan (SPCP).

Signature Flight Support Corporation plans a construction project to address compliance issues at the current Bradley International Airport Bulk Fuel Storage Facility. This project meets the definition of a "construction activity" in accordance with the General Permit. A copy of the General Permit and associated General Permit Registration Form are included in Appendix A.

This SPCP was prepared in accordance with the requirements of the General Permit. The purpose of this plan is to avoid/mitigate pollution caused by soil erosion and sedimentation during construction. Erosion and sedimentation control requirements are also shown on the Drawings for this project. During construction, the construction contractor(s) shall be responsible for implementing all elements of the erosion and sedimentation control measures as defined on the Drawings and in this SPCP. Throughout the construction process, Signature or Signature's agent and the Contractor shall periodically inspect all erosion control measures. A copy of the inspection form to be used is provided in Appendix B. This construction project will not be considered complete until all disturbed areas have been satisfactorily stabilized, all erosion has been repaired, and all temporary erosion control measures have been removed.

The general contractor and subcontractor(s) will be required to sign the certification statement provided in Appendix C of this plan.

Plan Organization

The SPCP is organized into six parts including a summary of the key provisions of the SPCP (Section 1.0); a site description (Section 2.0); a description of the construction sequence (Section 3.0); a description of the stormwater controls to be used to attain SPCP objectives (Section 4.0); inspection procedures (Section 5.0); and contractor requirements (Section 6.0).

Revisions to the SPCP

In accordance with the requirements of the General Permit, the SPCP will be amended whenever:

(1) there is a change in contractors or subcontractors at the site; or

(2) there is a change in design, construction, operation or maintenance at the site which has the potential for the discharge of pollutants to the waters of the State and which has not otherwise been addressed in the SPCP; or

(3) if the actions required by the SPCP fail to prevent pollution. The Commissioner of the CTDEP may also require to registrant to revise the SPCP if it does not meet one or more of the minimum requirements of the General Permit.

Section 2: Site Description

Site Description Narrative

The Bradley International Airport (BDL) Bulk Fuel Storage Facility is located as indicated on the Site Location Map (Appendix D). The Fuel Storage Facility Modification project is a renovation project of the existing fuel storage facility at Bradley International Airport, which has been in continual operation since 1973. The approximate 3.5-acre parcel is located on property owned by the Connecticut Airport Authority (CAA) and associated with Bradley International Airport (BDL) and within the Township of Windsor Locks, CT. All Work for this project will be performed within the site's existing footprint, with all areas of the site being subject to soil disturbance.

The Work shall include but not be limited to: new bottoms, ringwalls, and tank gauges for both ASTs, the installation of an impervious liner system, and converting the UST from an off-spec tank to a contact water tank. In addition, a new earthen dike will contain each AST within its own cell; this feature improves containment by segregating a potential spill. The site Work includes modifications to the existing bulk fuel facility and does not include any deforestation.

Access to the Bulk Storage Facility is via Park Rd, which intersects with Trap Rock Rd. The Bulk Storage Facility consists of two large aboveground storage tanks (AST), one small underground storage tank (UST), and other necessary fuel system equipment (filtration, pumps, piping, ect…) contained within a dike area.

The immediate receiving waters around the site are Rainbow Brook to the Farmington River, with the ultimate receiving water being the Connecticut River. There are no wetlands within the boundaries of the site and there are no site-specific erosion or sediment control concerns and issues.

Site Plan

A plan indicating the location and extents of the proposed construction activities is presented in the drawing G1.06 (Appendix F). The existing site conditions and grades are presented in drawing G1.10. During phase 1 of the construction a 12” underdrain will be installed in the northern portion of the site for the purpose of drying the site of standing water. The new outfall associated with the new underdrain will be located along the northern portion of the northwest perimeter. A new dike is proposed, which will utilize a 2:1 slope on both the exterior and interior dike walls. The interior of the dike will be lined with an impervious HDPE liner system and graded such that all water collecting within the dike shall drain to one of two strategically placed catch basins in the east and south corners of the dike along the southwestern perimeter of the site. In addition, a new gravel road shall be constructed for the purposes of fuel deliveries by truck. Generally, the area of the gravel roadway and surrounding area is pervious, with one exception: the truck unloading area is impervious and drains into the dike area. Stormwater

runoff that is associated with this pervious area and new road will drain to a catch basin located within the loop and then to the western perimeter of the site. Please see the drawings for the locations of the underdrain and catch basin outfalls.

Erosion control measures during the construction activities were designed in accordance with the 2002 edition of the "Connecticut Guidelines for Soil and Sediment Control" as published by The Connecticut Council on Soil and Water Conservation in cooperation with the Connecticut Department of Environmental Protection. Installation details and detailed erosion and sediment control notes are provided in the drawings. It is the intent of the owner to implement siltation fences, hay bales, and other preventative measures at each outfall around the perimeter of the site throughout the duration of construction. Additionally, the southeast perimeter of the site will be lined with hay bales to the extent necessary to prevent stormwater runoff sheet flow from reaching the nearby Rainbow Brook.

Section 3: Construction Sequencing

The Work at the BDL Bulk Fuel Facility shall be constructed in 3 phase:

Phase 1 (October 2014 to May 2015): Extend a new underdrain to relieve groundwater from beneath the dike floor and liner within 30 days of mobilization, and revise drainage from the dike suited to the subdivisions of the dike area (the number of point-discharges is limited to 4 as shown on the plans). Modify piping on tank 302 and at Buckeye filtration to add direct fuel receipt capability to tank 302. Add Buckeye communication for tank 302's overfill protection using existing Morrison gauge at lower electrical rack. Isolate tank 303 from the BDL fuel system. Receive by truck or pipeline and dispense fuel from tank 302 only. Inspect flanged joints in service by x-raying all welds.

Upon installation of the new underdrain siltation fences and hay bales will be put in place in accordance with the attached details.

Phase 2 (May 2015 to May 2016): Take tank 303 out of service, clean and perform all rework for tank 303 including ringwall, liner, cathodic protection, telltale, gauging, overfill protection, etc. Revise piping, appurtenances and add control interfaces, and extend programmable logic controller communication to the airside office of ASIG. Run raceway and conductors to new i/o cabinet and place it in the ASIG upper shack near the gate. Re-use the off-spec sti-p3 UST in place while temporarily containing severed piping and install fuel recovery system. Replace UST #601 concrete pad and access manways to allow the pad to be sealed for containment. Take transfer pump bf-1 out of service. Leave the balance of the lower control panel as-is until the next phase. Test and paint tank 303. Test all new controls. Verify manual operation works as well. Hydrotest and inspect new piping, loop flush new fuel facility piping as much as possible. Install portions of the semi-fixed foam connections to tank 303 and provide hand line near tank 303 for connection and service at the end of phase 3. Re-grading of the site shall begin at the southeast perimeter, the northeast perimeter and the north corner while maintaining sufficient dike containment volume.

Phase 3 (May 2016-September 2016): take tank 302 out of service, clean and perform all rework for tank 302 including ringwall, liner, cathodic protection, telltale, gauging, overfill protection, bottom, etc.

Revise piping, appurtenances and add control interfaces, and extend interfaces to the plc communication i/o cabinet. Install new liner for the cell surrounding tank 302. Hydrotest and inspect new piping as directed.

Upon installation of new drainage catch basins and outfalls, siltation fences and hay bales will be put in place in accordance with the attached details.

Section 4: Control Measures

The following sections address the controls and measures to be implemented on the construction site to minimize stormwater pollution to the waters of the state of Connecticut.

For a full list of control measures refer to the 2002 Connecticut Guidelines for Soil Erosion and Sediment Control issued by The Connecticut Council on Soil and Water Conservation in Cooperation with the Connecticut Department of Environmental Protection.

Erosion and Sediment Control

The goal of this plan is to control erosion on the site and to control movement of sediment into adjacent wetlands, watercourses or storm sewer systems. Note that erosion and sediment controls shall conform to the requirements of the "Connecticut Guidelines for Soil Erosion and Sediment Control," dated May 2002, which will hereafter be referred to as the Guidelines.

Preserve and Control Soil

Dust Control

To prevent the movement of dust from exposed soil surfaces, which may cause both off-site and on-site damage, be a health hazard to humans, wildlife and plant life, or create a safety hazard by reducing traffic visibility; exposed soil surfaces on unpaved travelways shall be periodically moistened by the Contractor to keep the travelway damp and to minimize wind erosion.

Stabilization Structures

Structural practices shall be implemented to control the movement of sediment and minimize any discharge of pollutants from the site. The structural practices to be implemented during construction are as follows:

Retaining Wall

A portion of the new dike containment area will utilize a retaining wall, which shall be constructed according to the attached plans.

Riprap

Riprap will be placed at each drainage outfall for the purposes of: protecting the soil surface form erosive forces, slowing the velocity of runoff to enhance the potential of infiltration, and to stabilize slopes with seepage problems. Please see drawings C4.09 and C11.01 for details.

Permanent Slope Drains

The new 12" HDPE underdrain outfall and the 3 drainage outfalls will employ permanent slope drains, to convey water away from the site, while minimizing erosion. The drains shall be installed in conformance with the attached plans. See details 1 and 4 of C4.04.

Drainageways and Watercourses

Permanent Lined Waterway

The new 12" HDPE underdrain outfall and the 3 drainage outfalls will employ permanent slope drains, to convey water away from the site, while minimizing erosion. The drains shall be installed in conformance with the attached plans. See details 1 and 4 of C4.04.

Diversions

Temporary Fill Berms

Temporary Fill Berms will be used to divert runoff from unprotected fill slopes during construction to a stabilized outlet or sediment trap. Temporary fill berms shall not be used in excess of 5 days. For use longer than 5 days the use of a temporary diversion shall be implemented.

Temporary Fill Berms shall be constructed such that:

1. The berm is at least 9 inches high with a base width of 3 feet.
2. The up slope side of the berm slope is no steeper than 3:1, the down slope side of the berm slope is no steeper than 1:1, and the down slope toe of the berm is not closer than 2 feet from the top of the fill slope.
3. The flow line controlled by the berm has a positive grade no steeper than 2%.

Temporary Diversions

Temporary Diversions shall be implemented when the intended use is 1 year or less, for the purposes of:

1. diverting sediment-laden runoff from a disturbed area to a sediment-trapping facility such as a temporary sediment trap or sediment basin,
2. directing water originating from undisturbed areas away from areas where construction activities are taking place, and
3. fragmenting disturbed areas thereby reducing the velocity and concentration of runoff.

No engineered design is required for a temporary diversion if the contributing drainage area is 1 acre or less. If the contributing drainage area exceeds 1 acre and is 5 acres or less, design the temporary diversion to the Permanent Diversion measure standards using the 2-year frequency storm as the design storm.

Temporary Fill Berms shall be constructed such that:

1. The minimum height from the bottom of the channel to the top of the berm shall be as least 18 inches and the berm constructed of compacted material.

2. Side slopes shall be 3:1 or flatter inside and 1:1 or flatter outside. The top width of the berm shall be 1 foot.
3. The flow line behind the berm shall have a positive grade. Channel grades flatter than 2% require no stabilization. Channels with grades steeper than 2% require stabilization in accordance with stabilization specifications found in the Permanent Diversion measure. Temporary diversions shall be stabilized according to the duration of their intended use (see Short Term Non-Living Soil Protection Functional Group).
4. The diverted runoff shall be diverted to a stable outlet or channel. If the diverted runoff is expected to be carrying a sediment load, the runoff shall be released to sediment impoundments.

Subsurface Drains

Subsurface Drains

The new 12" HDPE underdrain and the 4 drainage outfalls will employ permanent slope drains, to convey water away from the site, while minimizing erosion. The drains shall be installed in conformance with the attached plans. See details 1 and 4 of C4.04.

Energy Dissipators

Outlet Protection

Outlet protection measures shall be implemented to prevent scour at drainage outfalls and to minimize the potential for downstream erosion by reducing the velocity of water flows. The rock outlet protection shall be constructed in accordance with the attached plans. See detail 6/C4.04.

Stone Check Dam

A temporary stone check dam shall be placed across drainageways for the purposes of reducing the velocity of runoff, and to temporarily pond runoff to allow sediments to settle out. The use of stone check dams will be at the discretion of the Owner, Contractor, and Engineer.

No engineered design is required for a stone check dam if the contributing drainage area is 2 acres or less and its intended use is shorter than 6 months. If the contributing drainage area is greater than 2 acres or its intended use is longer than 6 months, design the stone check dam according to generally accepted engineering standards (e.g. National Engineering Handbook – Part 650, DOT Drainage Manual). Additionally, the design shall contain construction standards and specifications required for implementation and maintenance of the measure. For use of a stone check dam less than 1 year, design the stone check dam to safely pass the peak flow expected from a 2-year frequency storm without structural failure and adverse tailwater effects. For use of a stone check dam exceeding 1 year, design the stone check dam to safely pass the peak flow expected from a 25-year frequency storm without structural failure of the check dam and adverse tailwater effects.

Barriers and Filters

Hay Bale Barrier

Hay bale barriers shall be used a temporary sediment barrier for the purpose of: intercepting and detaining sediment, decreasing the velocity of sheet flow, redirecting small volumes of water away from erodible soils, and settling and assisting in the filtration of water discharged from construction activities. This type of barrier shall be implemented where: the drainage area is less than 1 acre in size, protection and effectiveness is less than 3 months, or where sedimentation will reduce the capacity of storm drainage systems or adversely affect adjacent areas.

The hay bales shall be made of hay or straw with a minimum weight of 40lbs and a maximum weight of 120lbs. Stakes for anchoring the hay bales shall be a minimum of 36" in length and shall be made of either hardwood with dimensions of at least 1.5" square or steel posts with a minimum weight of 0.5lbs per linear foot. See details 1, 2, 4 and 5 on C11.01.

Geotextile Silt Fence

Geotextile siltation fences shall be implemented for the purposes of: intercepting and retaining sediment for disturbed areas, and decreasing the velocity of sheet flows and low volume concentrated flows. This type of barrier shall be implemented: where the drainage area is less than 1 acre in size, and at drainage inlets and catch basins where sedimentation will reduce the capacity of the drainage system or adversely affect the adjacent areas. This type of barrier is not to be used in areas where rock, frozen ground or other hard surfaces prevent proper installation of the barrier, and is prohibited from use in drainageways whose flow is supported by ground water discharge. Please see detail 3, 7, and 8 on C4.04.

Tire Tracked Soils

Construction Entrance

A stone stabilized pad shall be employed to reduce the tracking of sediment off site onto paved surfaces. The Contractor shall place and maintain this pad at the entrance to the facility. Please see the Construction Entrance detail on C9.01.

Maintenance

The erosion and sediment controls must be maintained in a condition that will protect the resource areas from pollution during site construction. The Contractor shall conduct the following maintenance to ensure that the proper performance of erosion and sediment control measures is maintained throughout construction.

Dust Control

Repeat application of dust control measures when fugitive.

Riprap

Riprap shall be inspected periodically to determine if high flows have caused scour beneath the riprap or filter blanket or dislodged any of the riprap or filter blanket materials.

Permanent Drain Slopes

During construction of the permanent slope drain inspect associated temporary erosion and sediment controls at least once a week and within 24 hours of the end of a storm with a rainfall amount of 0.5 inch or greater for failure. Make repairs and adjustment to erosion controls as needed.

Permanent Lined Waterway

Until the contributing drainage area is stabilized, inspect within 24 hours of the end of a storm with a rainfall.

Temporary Fill Berms

Inspect the temporary fill berm and associated controls at the end of each work day to ensure the criteria for installing the measure has been met. Determine if repair or modification of the berm and associated measures are needed. Make modification and/or repairs as needed.

Temporary Diversions

When the temporary diversion is located within close proximity to ongoing construction activities, inspect the temporary diversion at the end of each work day and immediately repair damages caused by construction equipment. Otherwise inspect the temporary diversion and any associated measures weekly or immediately after 0.5 inch of rain falls within a 24-hour period to determine maintenance needs.

Repair the temporary diversion and any associated measures within 24 hours of observed failure. Failure of the temporary diversion has occurred when the diversion had been damaged by either construction equipment, erosion or siltation such that it no longer meets the criteria provided in the engineered design (if any).

When repetitive failures occur at the same location, review conditions and limitation for use and determine if additional measures are needed to reduce failure rates or if alternate measures are indicated to replace the temporary diversion.

Subsurface Drain

Inspect the outlets to subsurface drains annually to ensure that they are free-flowing, not clogged with sediment and the animal guards are in place. Keep the outlet clean and free of debris. Keep any surface inlets open and free of sediment and other debris. Trees located too close to a subsurface drain often clog the system with their roots. If a drain becomes clogged, relocate the drain or remove the trees.

Outlet Protection

Inspect the completed structure annually and after each major rainfall for damage and deterioration. Repair damages immediately.

Stone Check Dam

For temporary stone check dams, inspect stone check dams at least once a week and within 24 hours of the end of a storm with a rainfall amount of 0.5 inch or greater to determine maintenance

needs. Remove the sediment deposits when deposits reach approximately half the height of the check dam. Replace or repair the check dam within 24 hours of observed failure. Failure of the check dam has occurred when sediment fails to be retained because: stone has moved, soil has eroded around or under the check dam reducing its functional capacity, or when trapped sediments are overtopping the check dam.

Maintain the stone check dam until the contributing area is stabilized. After the contributing area is stabilized, remove accumulated sediment. Stone check dams may be removed or graded into the flow line of the channel over the area left disturbed by sediment removal. Grade so there are no obstructions to water flow. If stone check dams are used in grass-lined channels which will be mowed, remove all the stone or carefully grade out the stone to ensure it does not interfere with mowing. Stabilize any disturbed soil that remains from check dam removal operations.

Hay Bale Barrier

Inspect the hay bale barrier at least once a week and within 24 hours of the end of a storm with a rainfall amount of 0.5 inch or greater to determine maintenance needs. For dewatering operations, inspect frequently before, during, and after pumping operations.

Remove the sediment deposits or install a secondary barrier upslope from the existing barrier when sediment deposits reach approximately one half the height of the barrier.

Replace or repair the barrier within 24 hours of observed failure. Failure of the barrier has occurred when sediment fails to be retained by the barrier because: the barrier has been overtopped, undercut or bypassed by the runoff, the barrier has been moved out of position, or the hay bales have deteriorated or have been damaged.

Maintain the hay bale barrier until the contributing area is stabilized. After the upslope areas have been permanently stabilized, pull the stakes out of the hay bales. Unless otherwise required, no removal or regrading of accumulated sediment is necessary. The hay bales may then be left in place or broken up for ground cover.

Geotextile Silt Fence

Inspect the silt fence at least once a week and within 24 hours of the end of a storm with a rainfall amount of 0.5 inch or greater to determine maintenance needs. When used for dewatering operations, inspect frequently before, during and after pumping operations.

Remove the sediment deposits or, if room allows, install a secondary silt fence up slope of the existing fence when sediment deposits reach approximately one half the height of the existing fence. Replace or repair the fence within 24 hours of observed failure. Failure of the fence has occurred when sediment fails to be retained by the fence because: the fence has been overtopped, undercut or bypassed by the runoff, the fence has been moved out of position, or the geotextile has decomposed or has been damaged.

Maintain the fence until the contributing area is stabilized. After the contributing area is stabilized determine if sediment contained by the fence requires removal or regrading and stabilization. If the depth is greater than or equal to 6 inches, regrading or removal of the accumulated sediment is required. No removal or regrading is required if sediment depth is less than 6 inches.

Remove the fence by pulling up the support posts and cutting the geotextile at ground level. Regrade or remove sediment as needed, and stabilize disturbed soils.

Construction Entrance

Maintain the entrance in a condition which will prevent tracking and washing of sediment onto paved surfaces. Provide periodic top dressing with additional stone or additional length as conditions demand. Repair any measures used to trap sediment as needed. Immediately remove all sediment spilled, dropped, washed or tracked onto paved surfaces. Roads adjacent to a construction site shall be left clean at the end of each day.

If the construction entrance is being properly maintained and the action of a vehicle traveling over the stone pad is not sufficient to remove the majority of the sediment, then either (1) increase the length of the construction entrance, (2) modify the construction access road surface, or (3) install washing racks and associated settling area or similar devices before the vehicle enters a paved surface.

Dewatering Wastewater Control Measures

Should excavation dewatering become necessary for this project, there shall be no discharge directly into wetlands, watercourses, or storm sewer structures. Proper methods and devices shall be utilized to the extent permitted by law, such as pumping water into a temporary sedimentation trap, providing surge protection at the inlet and outlet of pumps, floating the intake of the pump, or other methods to minimize and retain the suspended solids. If a pumping operation causes turbidity in excess of the allowable limits, the operation shall cease until feasible means of controlling turbidity are determined and implemented.

For details and specifications on acceptable control measures for dewatering refer to the 2002 Connecticut Guidelines for Soil Erosion and Sediment Control issued by The Connecticut Council on Soil and Water Conservation in Cooperation with the Connecticut Department of Environmental Protection.

Section 5: Inspections and Monitoring

Plan Implementation Inspections

Within the first 30 days following commencement of the construction activity on the site, the Contractor shall contact: (1) the appropriate District; or (2) a qualified soil erosion and sediment control professional or a qualified professional engineer to inspect the site. The site shall be inspected at least once and no more than three times during the first 90 days to confirm compliance with the general permit and proper initial implementation of all controls measures designated in the Plan for the site for the initial phase of construction. For sites not inspected by District personnel, the following conditions shall apply: is not an employee, as defined by the Internal Revenue Service in the Internal Revenue Code

of 1986, of the registrant, and has no ownership interest of any kind in the project for which the registration is being submitted.

Routine Inspections

Signature's agent and/or qualified personnel provided by the Contractor shall inspect disturbed areas of the construction activity that have not been permanently stabilized, structural control measures, and locations where vehicles enter or exit the site at least once every seven calendar days and within 24 hours of the end of a storm that generated 0.1 inches during a twenty-four hour period. Where areas have been temporarily or finally stabilized, inspections shall be conducted at least once every month for three months.

Disturbed areas and areas used for storage of materials that are exposed to precipitation shall be inspected for evidence of, or the potential for, pollutants entering the drainage system. Erosion and sediment control measures identified in the plan shall be observed to ensure that they are operating correctly. Where discharge locations or points are accessible, they shall be visually inspected to ascertain whether erosion control measures are effective in preventing significant impacts to receiving waters. Locations where vehicles enter or exit the site shall be inspected for evidence of off-site sediment tracking.

Based on the results of the inspections, the description of potential sources and pollution prevention measures identified in this plan shall be revised as appropriate by Signature or its assigned agent as soon as practicable after such inspection. Such modifications shall provide for timely implementation of any changes to the site within 24 hours and implementation of any changes to the SPCP within 3 calendar days following the inspection.

A report summarizing the scope of the inspection, name(s) and qualifications of personnel making the inspection, the date(s) of the inspection, major observations relating to the implementation of the SPCP, and actions taken shall be made and retained as part of the SPCP for at least three years after the date of inspection. The report shall be signed by Signature or its assigned agent. A blank copy of the inspection report is provided in Appendix B.

Section 6: Contractors

General

All contractors and subcontractors who will perform Work on site that may reasonably be expected to cause or have the potential to cause pollution of the waters of the State of Connecticut are identified in Appendix C.

Certification Statement

All contractors and subcontractors shall sign the certification included in Appendix C. All certifications shall be included in this Stormwater Pollution Control Plan.

Section 6: Other Controls

Waste Disposal

Material Handling

All construction materials that could potentially contamination stormwater (petroleum products, solvents, concrete waste, paint, etc.) will be handled to minimize exposure to stormwater. Materials will be kept in secure containers and be properly labeled, with copies of the Material Safety Data Sheets (MSDS) maintained on-site.

Solid and Liquid Waste Disposal

Solid and liquid waste will be disposed of properly and in accordance with municipal disposal requirements. All waste material will be stored in a secure container while awaiting their removal from the Project site. The waste containers shall be inspected regularly to ensure their integrity. Additionally, no solid or liquid wastes will be disposed of on-site, instead they shall be taken off-site for proper disposal in accordance with municipal disposal requirements.

Hazardous Waste

Any hazardous waste material will be disposed of in the manner specified by the manufacturer and by local, state, and federal regulations.

Sanitary Waste

The Contractor must comply with all federal, state, and local sanitary sewer, portable toilet, or septic system regulations. The contractor shall provide sanitary facilities at the Project site throughout the duration of construction activities and the sanitary facilities should be used by all construction personnel and be serviced regularly. The Contractor shall coordinate with the Owner to determine the best location for the sanitary facilities.

Washout Area

If vehicle washing is required, the washout of applicators, containers, vehicles and equipment for concrete, paint and other materials shall be conducted in a designated washout area within the contained area. The Contractor shall coordinate with the Owner a designated washout area such that no surface discharge of washout wastewaters form the area shall occur.

The washout area shall be contained and shall be located inside the existing dike and shall be an entirely self-contained washout system. The designated washout area shall be clearly flagged off and shall only be used for washing and conducting such activities.

In addition, dumping of liquid wastes in storm sewers or outfalls is prohibited. The Contractor shall remove and dispose of hardened concrete waste consistent with practices developed for waste disposal. At least once per week, the Contractor must inspect any containers or pits used for washout to ensure structural integrity, adequate holding capacity, and to check for leaks or overflows. If there are signs of leaks, holes or overflows in the containers or pits that could lead to a discharge, the Contractor shall repair them prior to further use. For concrete washout areas, the Contractor shall remove hardened

concrete waste whenever the hardened concrete has accumulated to a height of ½ of the container or pit or as necessary to avoid overflows.

Appendix A: Stormwater Discharge Registration Form and General Permit for the Discharge of Stormwater and Dewatering Wastewaters from Construction Activities.

Copy of Signed Stormwater Discharge Registration Form to Be Inserted Here

Appendix B: Inspection Report Form

INSPECTION REPORT FORM

SIGNATURE FLIGHT SUPPORT
FUEL STORAGE FACILITY MODIFICATION PROJECT
WINDSOR LOCKS, CT

Date of Inspection: _____
Inspector's Name: _____
Employed By: _____

Circle Type of Inspection: Monthly / Weekly / Within 24 hrs of Storm

Stabilization Practices [(1)]

Major Observations or Deficiencies	Actions Taken	Date Completed

Structural Practices [(2)]

Major Observations or Deficiencies	Actions Taken	Date Completed

_____ _____
Signature of Inspector Date

_____ _____
Signature of Owner Date

[(1)] Stabilization practices to be inspected include: grading and disturbed area.
[(2)]Structural practices to be inspected include: filtration barriers, fiber filtration tubes, erosion control blankets, check dams, inlet sedimentation controls and detention basins.

Appendix C: Contractor Identification and Certification

CONTRACTOR IDENTIFICATION FORM

SIGNATURE FLIGHT SUPPORT
FUEL STORAGE FACILITY MODIFICATION PROJECT
WINDSOR LOCKS, CT

General Contractor	Point of Contact	Phone

Subcontractors	Point of Contact	Phone

CERTIFICATION FORM

SIGNATURE FLIGHT SUPPORT
FUEL STORAGE FACILITY MODIFICATION PROJECT
WINDSOR LOCKS, CT

GENERAL CONTRACTOR

"I certify under penalty of law that I have read and understand the terms and conditions of the General Permit for the Discharge of Stormwater and Dewatering Wastewaters from Construction Activities. I understand that as a contractor or subcontractor at the site, I am authorized by this general permit, and must comply with the terms and conditions of this general permit, including but not limited to the requirements of the Stormwater Pollution Control Plan prepared for the site."

Signed: _____ Date: _____

Printed Name: _____ Telephone: _____

Title: _____

Firm: _____

Address: _____

_____

_____

_____

CERTIFICATION FORM

SIGNATURE FLIGHT SUPPORT
FUEL STORAGE FACILITY MODIFICATION PROJECT
WINDSOR LOCKS, CT

SUBCONTRACTOR

"I certify under penalty of law that I have read and understand the terms and conditions of the General Permit for the Discharge of Stormwater and Dewatering Wastewaters from Construction Activities. I understand that as a contractor or subcontractor at the site, I am authorized by this general permit, and must comply with the terms and conditions of this general permit, including but not limited to the requirements of the Stormwater Pollution Control Plan prepared for the site."

Signed: _____ Date: _____

Printed Name: _____ Telephone: _____

Title: _____

Firm: _____

Address: _____

_____

_____

_____

Appendix D: U.S. Geological Survey (USGS) Quadrangle Map

UNITED STATES
DEPARTMENT OF THE INTERIOR
GEOLOGICAL SURVEY

WINDSOR LOCKS QUADRANGLE
CONNECTICUT–HARTFORD CO.
7.5 MINUTE SERIES (TOPOGRAPHIC)

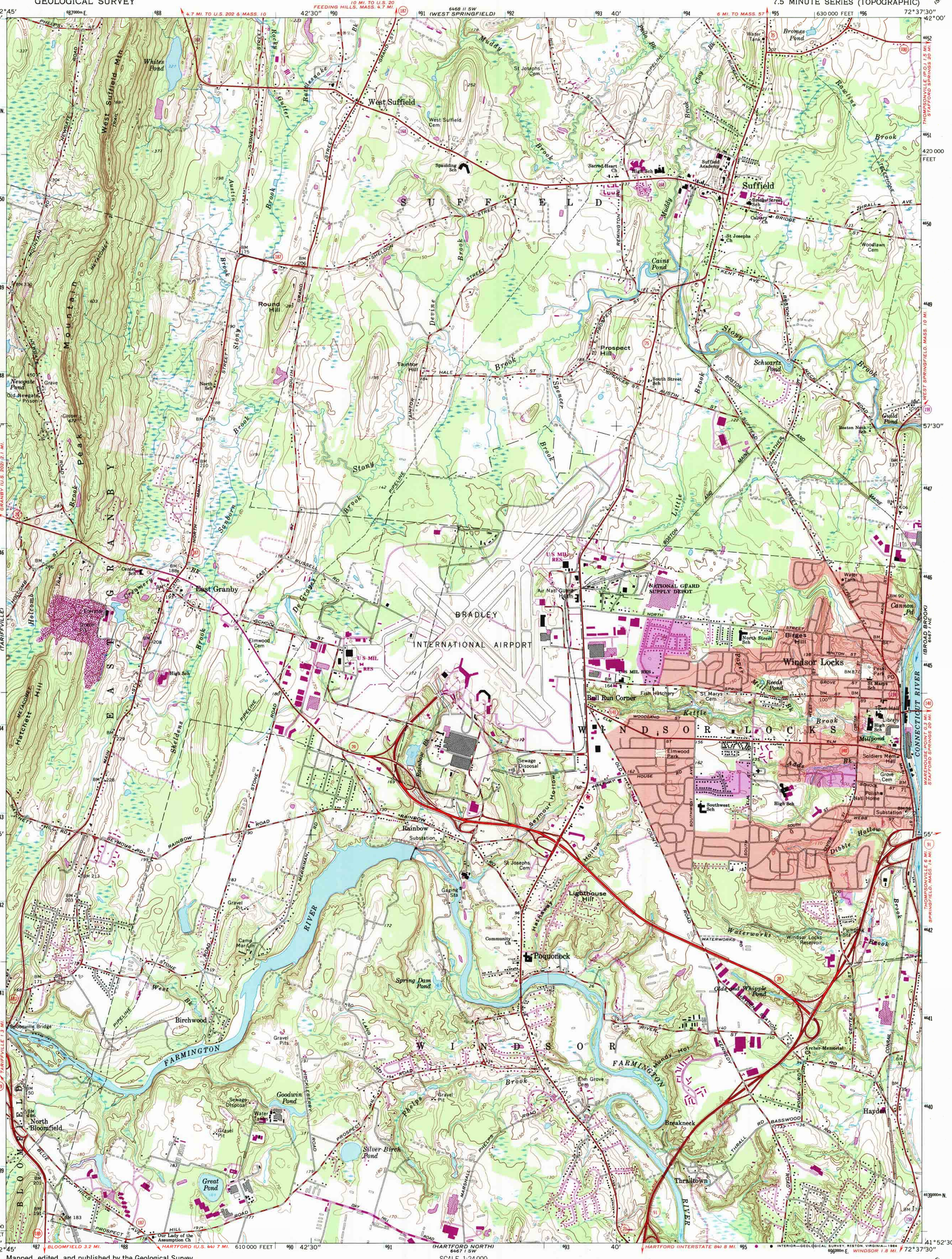

Mapped, edited, and published by the Geological Survey
Revised in cooperation with Connecticut Highway Department

Control by USGS, NOS/NOAA, and Connecticut Geodetic Survey

Planimetry by photogrammetric methods from aerial photographs taken 1940. Topography by planetable surveys 1943. Revised 1964

Polyconic projection. 10,000-foot grid ticks based on Connecticut coordinate system
1000-meter Universal Transverse Mercator grid ticks, zone 18, shown in blue
1927 North American Datum
To place on the predicted North American Datum 1983 move the projection lines 5 meters south and 38 meters east as shown by dashed corner ticks

Fine red dashed lines indicate selected fence and field lines where generally visible on aerial photographs. This information is unchecked

Red tint indicates area in which only landmark buildings are shown

There may be private inholdings within the boundaries of the National or State reservations shown on this map

MN GN
14° 249 MILS
1°33′ 28 MILS
UTM GRID AND 1984 MAGNETIC NORTH DECLINATION AT CENTER OF SHEET

SCALE 1:24 000
1 ½ 0 1 MILE
1000 0 1000 2000 3000 4000 5000 6000 7000 FEET
1 .5 0 1 KILOMETER

CONTOUR INTERVAL 10 FEET
NATIONAL GEODETIC VERTICAL DATUM OF 1929

THIS MAP COMPLIES WITH NATIONAL MAP ACCURACY STANDARDS
FOR SALE BY U. S. GEOLOGICAL SURVEY
DENVER, COLORADO 80225, OR RESTON, VIRGINIA 22092
A FOLDER DESCRIBING TOPOGRAPHIC MAPS AND SYMBOLS IS AVAILABLE ON REQUEST

CONNECTICUT
QUADRANGLE LOCATION

Revisions shown in purple and woodland compiled in cooperation with State of Connecticut agencies from aerial photographs taken 1982 and other sources
This information not field checked. Map edited 1984

Purple tint indicates extension of urban areas

ROAD CLASSIFICATION
Heavy-duty — Light-duty
Medium-duty — Unimproved dirt
Interstate Route — U. S. Route — State Route

WINDSOR LOCKS, CONN.
41072-H6-TF-024

1964
PHOTOREVISED 1984
DMA 6467 I NW–SERIES V816

Appendix E: U.S. Fish and Wildlife Service (USFWS) Map and Drawings

U.S. Fish and Wildlife Service

National Wetlands Inventory

BLD Bulk Fuel Facility

Jun 24, 2014

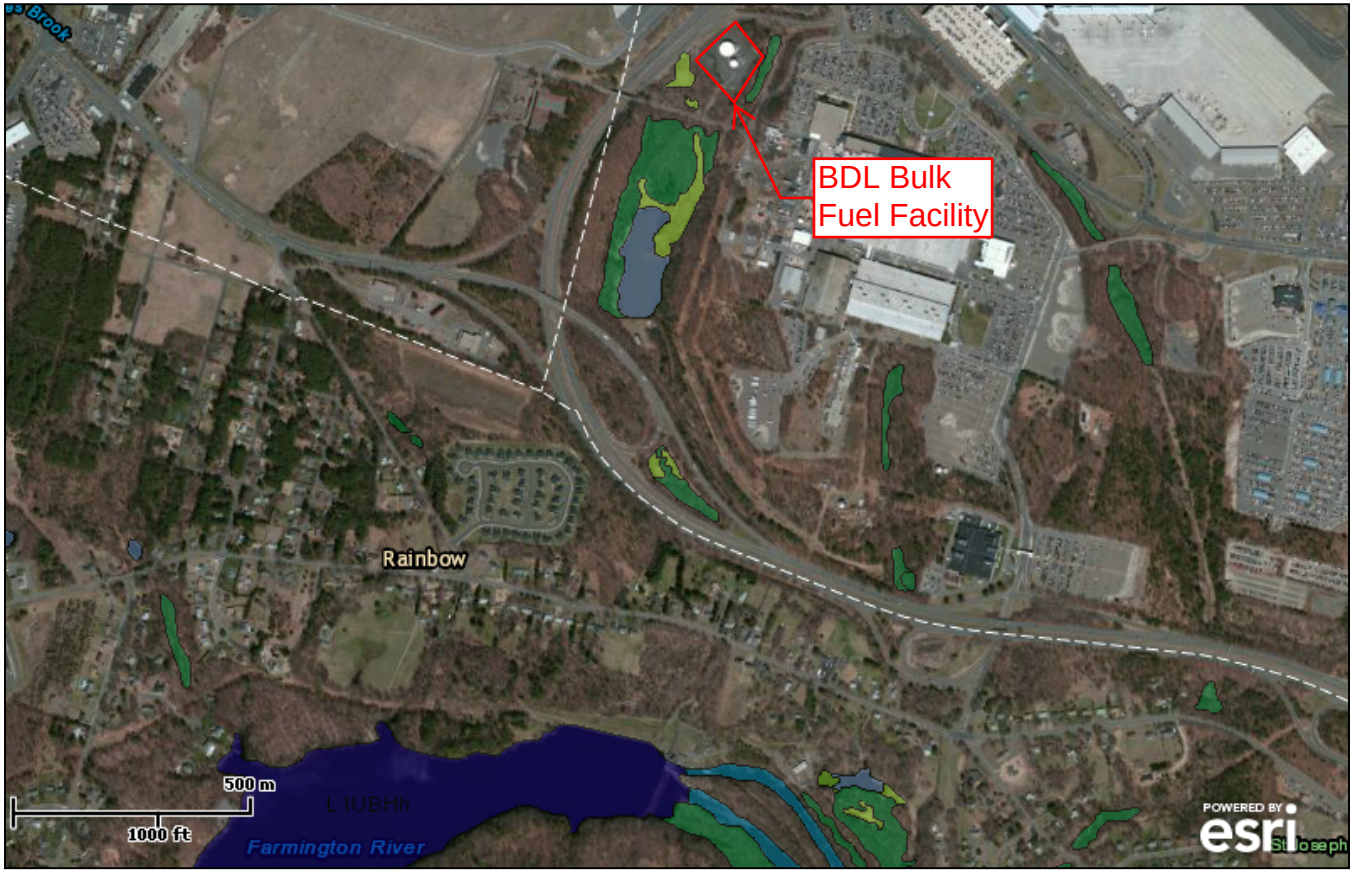

Wetlands

- Freshwater Emergent
- Freshwater Forested/Shrub
- Estuarine and Marine Deepwater
- Estuarine and Marine
- Freshwater Pond
- Lake
- Riverine
- Other

This map is for general reference only. The US Fish and Wildlife Service is not responsible for the accuracy or currentness of the base data shown on this map. All wetlands related data should be used in accordance with the layer metadata found on the Wetlands Mapper web site.

User Remarks:

BLD Bulk Fuel Facility Surrounding Wetlands and the Farmington River

Appendix F: Project Drawings

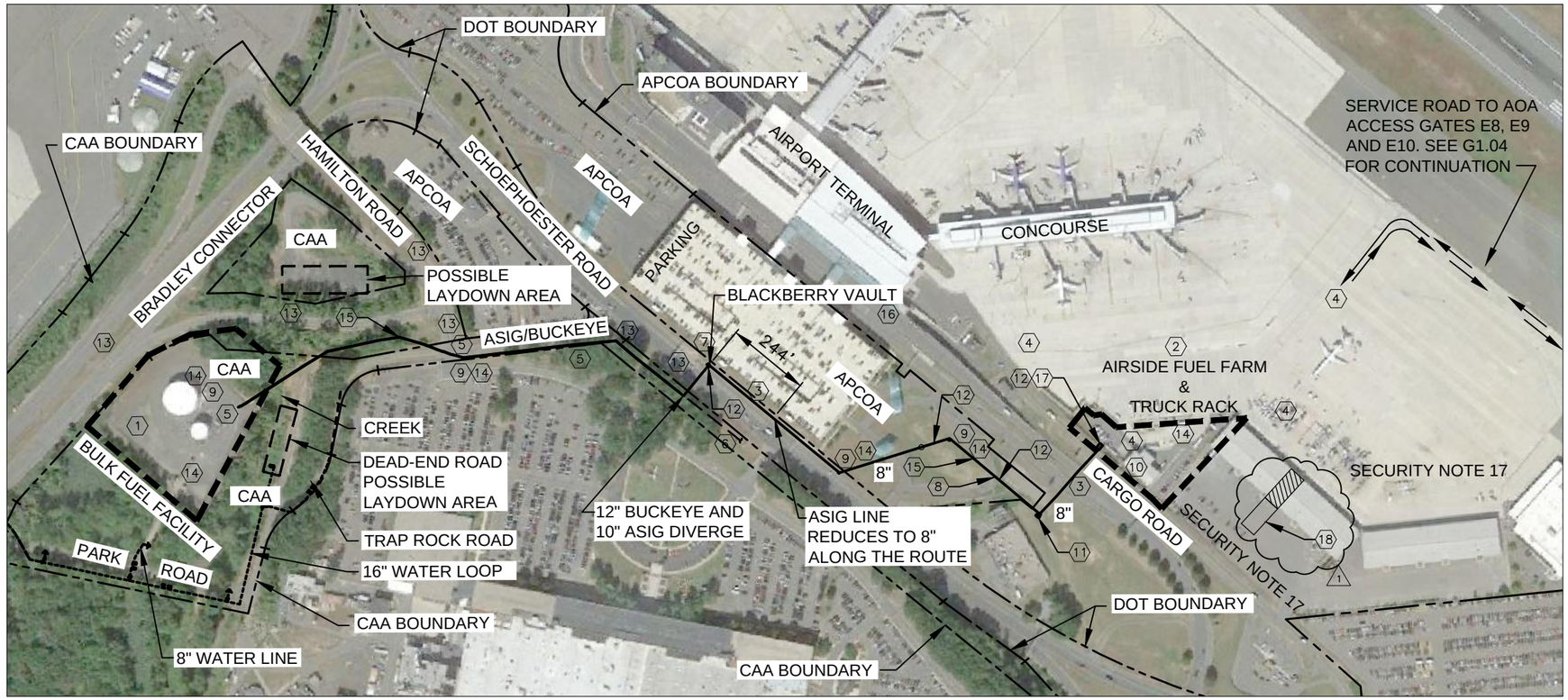

14 1 GENERAL SITE AND FUEL SYSTEM PLAN

SCALE: AS SHOWN

0 200 400 600
SCALE IN FEET

EXISTING PUMP DATA @ BULK						EXISTING MOTOR DATA @ BULK					
	NO.	HP	FT	GPM	NOTES	SERVICE FACTOR	SPEED	AMPS	VOLTAGE	OVERHEAT PROTECTION	IMPELLER
*	BF-1 6x5	20	90 60	600 1000	GORMAN-RUPP 65A32-B SN # 541793N CAST STEEL	1.0	1755 RPM	25	480	NO	10.5"
*	BF-2 4x3	50	230	600	GORMAN-RUPP RD-3A3-2B SN # 778C460 CAST-STEEL	1.0	3550 RPM	56	480	NO	8.5" (MAX)
**	BF-3 6x4	60	270	625	GORMAN-RUPP 64K32-B SN #795817N CAST STEEL	1.0	3550 RPM	77	480	YES	9.75" (ASSUMED)

*PUMPS BF-1 & 2 DATA BASED ON PURCHASE ORDER INFORMATION RECEIVED FROM ASIG. (TEXACO/AIR KAMAN 1973)
**PER PLANS

KEYNOTES: (X)

1. BULK FUEL FACILITY. SEE G1.06 FOR A GENERAL REFERENCE PLAN.
2. AIRSIDE FUEL FARM. SEE G1.07 FOR A GENERAL REFERENCE PLAN.
3. ASIG TRANSFER LINE FROM THE BULK FUEL FACILITY TO THE AIRSIDE FUEL FARM
4. AIRCRAFT OPERATIONS AREA (AOA)
5. ASIG FUEL TRANSFER LINE IS SHALLOW IN THIS AREA. DEPTH OF BURY RANGES FROM 2 FEET TO 1.5 FEET.
6. BUCKEYE PIPELINE IS A DEDICATED JET A PIPELINE OFF A MULTI–PRODUCT LINE AND ITS ROUTE BEYOND THIS POINT IS UNDOCUMENTED.
7. BLACKBERRY VAULT THAT WAS BUILT TO DIVERT THE FUEL LINE AROUND THE NEW PARKING STRUCTURE.
8. PARKING GARAGE GUARD RAIL CONFLICT WITH UNDERGROUND ASIG TRANSFER LINE. EXCAVATE, IDENTIFY AND REMOVE GROUNDED CONDITION.
9. CONTRACTOR TO PERFORM AN API 570 EXAM OF ASIG TRANSFER LINE. SEE CONTRACT DOCUMENTS FOR ADDITIONAL INFORMATION.
10. OPERATIONS AND MAINTENANCE BUILDING.
11. EXISTING LOW POINT DRAIN.
12. PROPOSED CATHODIC PROTECTION TEST STATION LOCATION.
13. AREA AFFECTED BY CT–DOT ROADWORK.
14. SEE REFERENCE PLANS FOR EXISTING CONDITION INFORMATION.
15. PROPOSED CATHODIC PROTECTION TEST STATION. SEE 5/CP5.03.
16. PROPOSED CATHODIC PROTECTION TEST STATION. SEE 6/CP5.03.
17. ~~PROPOSED CATHODIC PROTECTION TEST STATION AT CSE VAULT. SEE 7/CP5.03.~~
18. PROPOSED CONSTRUCTION TRAILER AND PARKING LOCATION. (1)

EXISTING TANKS	GROSS CAP. (GAL.)	NAMEPLATE CAP. (GAL.) & NOTES	SAYBOLT CAP. (GAL.)	DIAMETER	HEIGHT OR LENGTH	BUILT	BUILT BY	ROOF	BOTTOMS & COATINGS	CLASS	CONFIGURATION	OWNED BY
<1863> BULK 303	1,880,060	1,879,920	1,858,249	100'	32' (H)	1973	TEXACO	FIXED	CONE-UP (~11-1/2" PER SAYBOLT CHART)	AST	SINGLE BOTTOM	ASIG
<1863> BULK 302	470,016	499,800	467,397	50'	32' (H)	1973	TEXACO	FIXED	CONE-UP (~5-1/2" PER SAYBOLT CHART)	AST	SINGLE BOTTOM	ASIG
<1863> BULK OFF-SPEC #601	4,000	-	4,010	5'-4"	24' (L)	1994	MOHAWK STI-P3 S/N 217533 (315-793-3000)	N/A	EXTERIOR URETHANE	UST	TYPE 1-360° DOUBLE WALL - STEEL	ASIG
<1863> AIRSIDE OFF-SPEC #602	10,000	-	-	8'	26' - 8" (L)	2001	INTERNATIONAL TANK	N/A	N/A	AST	DOUBLE WALL - STEEL	ASIG
<1993> AIRSIDE DIESEL #600	6,000	PUMP #1	-	8'	16' (L)	1998	-	N/A	N/A	AST	DOUBLE WALL - STEEL	ASIG
<1203> AIRSIDE MOGAS #400	6,000	PUMP #2	-	8'	16' (L)	1998	-	N/A	N/A	AST	DOUBLE WALL - STEEL	ASIG
AIRSIDE OWS # 700	6,000	-	-	6'	29' (L)	1983	PSI	N/A	N/A	UST	SINGLE WALL - STEEL	ASIG
<1203> TAC-AIR AIRSIDE AVGAS (NO #)	6,000	PUMP #3	-	-	-	-	-	N/A	N/A	AST	DOUBLE WALL - STEEL	TAC-AIR

GAL/ CU. FT. = 7.48051948

DATA AND COMMUNICATION NOTES

1. DATA MUST BE TRANSMITTED EFFICIENTLY AND EFFECTIVELY TO AND FROM THE BULK FACILITY TO THE SECOND FLOOR MANAGEMENT ROOM ON THE AIRFIELD. THIS ROOM OVERLOOKS THE AIRSIDE LOADING RACKS.
2. DATA RELATED TO PUMPS AND TANK OPERATIONS IS REQUIRED TO BE TRANSMITTED TO THE AIRSIDE OFFICE.
3. THE COMMUNICATION BACKBONE THAT IS CURRENTLY SERVING THE AIRPORT SECURITY STAFF AT BDL IS NOT AVAILABLE FOR ASIG/CONTRACTOR USE. THE SATELLITE COMMUNICATION IN USE BY BUCKEYE IS NOT SUITABLE FOR ASIG USE. A DEDICATED DSL LINE NOW SERVING ASIG SHALL BE USED FOR DATA COMMUNICATION.

CT DOT ROADWORK ADJOINING THE PROJECT SITE

1. MR. JOHN HANNIFIN IS THE CHIEF POINT OF CONTACT FOR ROADWORK THAT WILL BE UNDER DESIGN AND CONSTRUCTION DURING THIS PROJECT. ROADWORK WILL IMPACT THE BRADLEY CONNECTOR, THE EXIT NEAR THE BULK FUEL FACILITY, HAMILTON ROAD AND SCHOEPHOESTER ROAD.
2. THE LATEST PLANS AVAILABLE FOR THIS ROADWORK MAY BE PROVIDED TO THE CONTRACTOR DURING THE BID PROCESS THROUGH THE CAA.

CAA INSPECTION NOTES

1. MR. JAMES LUCZAK, P.E. OF THE CAA WILL ACT AS THE CHIEF POINT OF CONTACT FOR CAA INSPECTIONS. CONTRACTOR SHALL COORDINATE ALL DATES AND TIMES FOR INSPECTIONS AT LEAST 3 DAYS IN ADVANCE TO SCHEDULE MR. LUCZAK'S TIME FOR INSPECTIONS.

SECURITY AND ACCESS NOTES

1. ALL BADGING REQUIREMENTS FOR ALL CONSTRUCTION LOCATIONS WILL BE DETERMINED AT THE PRECONSTRUCTION MEETING PRIOR TO THE COMMENCEMENT OF ANY CONSTRUCTION ACTIVITIES.
2. ANY AND ALL CRANE PERMITS SHALL BE SUBMITTED AND OBTAINED BY THE CONTRACTOR IN ACCORDANCE WITH FAA REQUIREMENTS. ALL CRANE MOBILIZATIONS AND ALL CRANE OPERATIONS SHALL BE COORDINATED BY THE CONTRACTOR WITH THE FAA AIRFIELD OPERATIONS POINT OF CONTACT AT THE BEGINNING OF THE AIRFIELD OPERATIONS SHIFT AND PRIOR TO CRANE MOVEMENT.
3. CONTRACTOR SHALL SUBMIT A COMPLETED FAA FORM 7460 IN ADVANCE OF MOBILIZING ANY CRANE OR TALL MOBIL EQUIPMENT TO THE PROJECT SITE AND OBTAIN APPROVALS FOR AIRFIELD OPERATIONS. VEHICLE SPEEDS WITHIN THE PROJECT SITE SHALL NOT EXCEED 5 MPH.
4. VEHICLE SPEEDS ON AIRPORT ROADS SHALL NOT EXCEED 15 MPH UNLESS OTHERWISE POSTED.
5. ALL WORK ACTIVITIES SHALL BE CONDUCTED IN STRICT ACCORDANCE WITH FAA ADVISORY CIRCULAR 150/5370–2E. 'OPERATIONAL SAFETY ON AIRPORTS DURING CONSTRUCTION'.
6. COMPLY WITH ALL BDL REGULATIONS PERTAINING TO WORK ACTIVITIES ON THE AIRPORT PROPERTY AND PROJECT SITE. PIPELINE ORIGINATES IN SOUTH WINDSOR, CONNECTICUT ABOUT 8 MILES FROM BDL
7. THE CONTRACTOR SHALL OBTAIN CONTACT POINTS FOR COMMUNICATION WITH THE AIR TRAFFIC CONTROL TOWER GROUND CONTROL. CONTRACTOR SHALL MAINTAIN EFFECTIVE MEANS OF COMMUNICATING WITH THIS TOWER AT ALL TIMES WHEN WORKING ON OR TRAVELING THROUGH THE AIR OPERATIONS AREA (AOA). PRIMARY POINTS OF CONTACT SHALL INCLUDE AIRPORT SECURITY AND BDL AND THE BUREAU OF AVIATION OPERATIONS PERSONNEL.
8. CONTRACTOR SHALL MAINTAIN ALL AIR OPERATIONS AREAS INCLUDING HAUL ROUTES AND CONSTRUCTION AREAS CLEAR OF ROCKS, MUD, DUST AND DEBRIS AT ALL TIMES. CONTRACTOR SHALL INSPECT AND CLEAN HAUL ROUTES USING AN AIRPORT APPROVED VACUUM SWEEPER MACHINE AND OTHER EQUIPMENT SUITED TO THE TASK AS REQUIRED AT NO INCREASE IN THE CONTRACT SUM DURING AND FOLLOWING EACH MOBILIZATION, HAULING AND DEMOBILIZING EVENT.
9. TRUCKS DELIVERING OR HAULING LOOSE OR GRANULAR MATERIAL WITHIN THE AOA SHALL BE COVERED TO PREVENT AIRBORNE DUST OR DEBRIS FROM ENTERING THE AOA AREA.
10. WATER SPRAY AND OTHER MEANS OF APPROVED DUST CONTROL SHALL BE USED THROUGHOUT CONSTRUCTION. SUBMIT DUST AND FOD CONTROL PLAN TO THE CAA FOR REVIEW AND APPROVAL PRIOR TO MOBILIZATION AND/OR THE START OF CONSTRUCTION AS DIRECTED BY BDL.
11. CONSTRUCTION LIGHTING USED FOR NIGHT WORK MUST BE EQUIPPED WITH SHIELDS TO BLOCK OR REDIRECT LIGHT AWAY FROM ACTIVE AIRCRAFT, TAXIWAYS, APRON AND AIRFIELD OPERATIONAL FACILITY SUCH AS THE AIRPORT CONTROL TOWER.
12. VEHICLE OPERATORS ROUTINELY DRIVING WITHIN SECURE PORTIONS OF THE AOA MUST POSSESS A VALID AIRFIELD DRIVERS LICENSE. ITINERANT DRIVERS MUST BE ESCORTED BY CONTRACTOR'S DESIGNEE AT CONTRACTOR'S COST AND MUST POSSESS A VALID PHOTO ID AND VALID CONNECTICUT DRIVERS LICENSE.
13. ALL CONTRACTOR EQUIPMENT AND MATERIALS SHALL BE MOVED TO DESIGNATED STAGING AREAS AND ALL SHALL BE KEPT GROUPED TOGETHER IN CLOSE PROXIMITY TO ACTIVE WORK AREAS AND OR DESIGNATED STAGING AREAS.
14. AIRCRAFT ALWAYS HAVE THE RIGHT OF WAY. SHOULD ANY DRIVER VIOLATE THIS DIRECTIVE, THEY WILL NOT BE ALLOWED BACK ONTO THE AOA.
15. IN ADDITION TO A CONSTRUCTION NPDES PERMIT, CONTRACTOR SHALL PROVIDE AND EXECUTE A STORM WATER POLLUTION PREVENTION PLAN (SWPPP). THE SWPPP SHALL BE APPROVED BY THE OWNER, THE CAA, THE STATE OF CONNECTICUT DEPARTMENT OF ENERGY & ENVIRONMENTAL PROTECTION (CT DEEP) AND THEIR DESIGNEES PRIOR TO COMMENCING WORK. THE PLAN SHALL INCLUDE PROTECTION OF OPEN EXCAVATIONS AND THE PROTECTION OF THE INLETS THAT DIRECT STORM WATER AND SPILLS TO ANY COLLECTION SYSTEM, ANY STREAM, NAVIGABLE WATERWAY OR OTHERWISE OFF THE WORK SITE AND/OR OWNER PROPERTY..
16. CONTRACTOR SHALL TAKE ALL REASONABLE PRECAUTIONS TO PROTECT EXISTING IMPROVEMENTS, STRUCTURES, LIGHTS AND FENCING. ANY IMPROVEMENTS DAMAGED BY CONTRACTOR ACTIVITIES OR PERSONNEL SHALL BE IMMEDIATELY REPAIRED OR RECONSTRUCTED BY CONTRACTOR TO THE SATISFACTION OF THE OWNER OF THE IMPROVEMENT AND THE BUREAU OF AVIATION.
17. CARGO AREA. NO CONTRACTOR PARKING UNLESS ARRANGED THROUGH THE OWNER, AIRPORT STAFF AND THE CAA.

REVISIONS		DATE
1	ADDED KEYNOTE 18	7/23/14

CURRIER & COMPANY
13323 W. Washington Blvd, Suite 206
Los Angeles, California 90066

PROJECT NAME: BRADLEY INTERNATIONAL AIRPORT
PROJECT LOCATION: FUEL STORAGE FACILITY MODIFICATIONS
DRAWING NAME: OVERALL FUEL SYSTEM LAYOUT, TANK DATA & SECURITY NOTES

ASIG BBA Aviation
Signature FLIGHT SUPPORT A BBA Aviation company

SEAL:

JONATHAN E. CURRIER
PROFESSIONAL ENGINEER
STATE OF CONNECTICUT
29037 - EXPIRES 01/31/15

DESIGNED BY:	J.E.C.	DATE:	04/30/14
DRAWN BY:	M.E.	PROJ. NO:	13007
APPROVED BY:	J.E.C.	FILE NAME:	13007G105

SHEET NUMBER: G1.05

ISSUED FOR BID

Plotted: P:\BDL – Bradley Hartford CT\13007 – BDL Design Bid Build\Dwgs\General\13007G105.dwg Mon, Jul 21, 2014 at 12:49pm – Mehdi

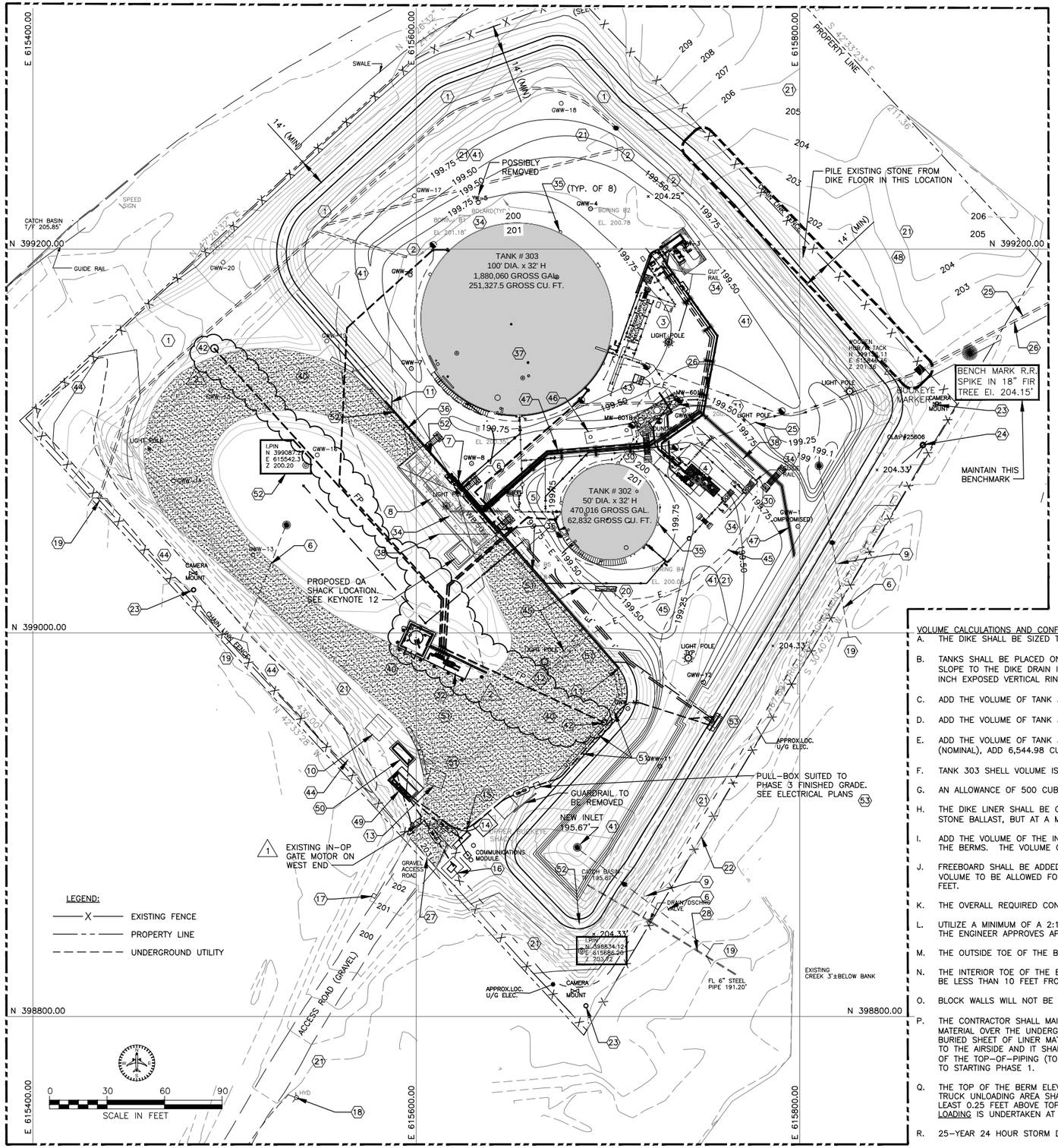

KEYNOTES: (X)

1. NEW 12" UNDERDRAIN AT INVERTS SHOWN ON CIVIL PLANS WILL BE INSTALLED ALONG THE NORTH CORNER AND NORTHWEST PERIMETER OF THE PROPERTY IN PHASE 1 AND NORTH OF TANK 303 AS SHOWN.
2. NEW 12" UNDERDRAIN WITH END CAP.
3. EXISTING BUCKEYE RECEIPT AREA.
4. EXISTING ASIG ISSUE AREA.
5. EXISTING TRANSFER AREA.
6. NEW DRAINAGE PIPE. SEE CIVIL PLANS.
7. NEW STAIRS (TYP. OF 3) IN THIS UNLOADING AREA.
8. NEW TRUCK RECEIPT AREA. CONCRETE CONTAINMENT AND PIPELINE METER PROVING.
9. NEW PIV AND DRAIN LINE. SEE CIVIL PLANS.
10. CONTRACTOR SHALL RELOCATE EXISTING WOODEN STORAGE SHACK STRUCTURE IS SHOWING SIGNS OF WEATHERING. USE CMU ON GRADE TO MATCH EXISTING SUPPORTS. INSTALL TO KEEP FLOOR LEVEL. SEE NOTE 13.
11. APPROXIMATE END OF 8" THICK WALL. SEE CIVIL PLANS FOR ACTUAL DIMENSIONS AND STAKING.
12. MOVE LOWER QA SHED IN PHASE 3. NEW LOCATION AT NEW TRUCK UNLOADING AREA. SEE REF-37.
13. MOVE EXISTING STORAGE SHED. SEE KEYNOTE 10 AND PHOTO 14 ON REF-37.
14. UPPER ASIG SHACK TO REMAIN. SEE ELECTRICAL SHEETS.
15. EXISTING UPPER CONTROL AND POWER PANEL AREA.
16. EXISTING TRANSFORMER.
17. EXISTING ACCESS CARD READER (IN-OP).
18. EXISTING FIRE HYDRANT (APPROXIMATELY 150' OFF THE FENCE LINE).
19. NEW OUTFALL STRUCTURE. SEE CIVIL PLANS.
20. EXISTING LOWER CONTROL PANEL. SEE ELECTRICAL SHEETS. ALSO SEE KEYNOTE 49.
21. EXISTING TOPOGRAPHY IS SHOWN ON THIS SHEET, BUT SELECTED NEW WORK IS SHOWN OVER THE EXISTING GRADES. SEE PLANS FOR COMPLETE SCOPE OF WORK.
22. EXISTING FENCE AND PROPERTY LINE ARE COINCIDENT ON THIS PERIMETER.
23. EXISTING SECURITY CAA CAMERA POLE
24. EXISTING POWER POLE AND GUY-WIRE.
25. EXISTING ASIG 10" FUEL LINE TO AIRSIDE FUEL FACILITY.
26. EXISTING BUCKEYE PIPELINE.
27. MANUAL LEAF GATE THAT CONTROLS ACCESS.
28. REPLACE DRAIN LINE TO CREEK PER CIVIL PLANS. ONCE REPLACED, DEMOLISH AND GROUT IN PLACE TO SUIT.
29. NOT USED.
30. NEW CROSS-OVER CATWALK.
31. EXISTING 4,000 GALLON DOUBLE WALLED STEEL STI-P3 UST WITH EXISTING SURFACE CONCRETE PAD TO BE REPLACED ATOP ASIG TANK #601. TANK MUST BE AT LEAST 1/2 FULL DURING CONSTRUCTION OF THE NEW PAD.
32. NEW FIRE FOAM CONNECTIONS AND CONCRETE PAD FOR TANKS 302 AND 303.
33. NOT USED.
34. REMOVE ALL EXISTING GUARDRAILS AND BOLLARDS FROM INSIDE DIKE IN PHASES.
35. REMOVE ALL SUMPS AT BOTH TANKS AND REMOVE SUMP AND CONTAINMENT PIPING UP TO EXISTING TANK #601 IN PHASES.
36. NEW RETAINING WALL. SEE PLANS FOR DETAILS AND PHASING.
37. SAYBOLT STRAPPING CHART FOR THE EXISTING TANK CALLS OUT MAXIMUM OIL FILL LEVEL VOLUME AT 1,858,249 WHICH CAN NOT BE USED FOR DIKE VOLUME CALCULATIONS. SHELL HEIGHT IS 32'-0" PER SAYBOLT. SEE DRAWING G1.05 FOR INFORMATION. VOLUME SHOWN ON THIS DRAWING IS FULL SHELL. CONTAINMENT VOLUMES CALCULATED BELOW ACCOUNT FOR NEW TANK ELEVATION AND CONE DOWN BOTTOM.
38. RELOCATE EXISTING HOSE RACK AS DIRECTED BY OWNER.
39. NOT USED.
40. NEW GRAVEL ROAD FOR INFREQUENT FUEL DELIVERIES AND QUARTERLY METER PROVING.
41. NEW IMPERVIOUS LINER.
42. PROPOSED FOAM HANDLINE LOCATION AND DRAIN CONNECTIONS.
43. UST-601 CONTROL PANEL RACK TO REMAIN.
44. REMOVE ABOUT 4" OF SILT TO MATCH GRADE OUTSIDE OF THE FENCE. REMOVE ROOTS IN THIS AREA. SEE CIVIL PLANS. REMOVE SOIL AND ROOTS ALONG FENCE LINE BY HAND WITHOUT DAMAGING THE FENCE.
45. THE ELECTRICAL CONDUIT ROUTING THAT IS SHOWN IS SCHEMATIC AND IS BASED ON ROUGH AS-BUILT DATA PROVIDED BY OWNER. SEE REFERENCE PLANS FOR HAND-WRITTEN ELECTRICAL DATA AND TEXACO DRAWING E-1, REF-9, REF-15, REF-16 AND REF-17.
46. REMOVED (POSSIBLY ABANDONED) WASTE TANK FILLED WITH SAND ABOUT 20" FROM TANK #601.
47. SEE CIVIL AND FM PLANS FOR KNEEWALL EXTENTS. BUILD IN PHASES. SEE FM3.XX DRAWINGS.
48. SEE G1.05 FOR POSSIBLE LAYDOWN AREAS.
49. NEW MOTOR STARTER AND ELECTRICAL POWER RACK. SEE ELECTRICAL PLANS AND KEYNOTE 20.
50. NEW PAD-MOUNTED GENERATOR AND SKID-MOUNTED DIESEL FUEL STORAGE TANK.
51. JERSEY BARRICADES. SEE CIVIL PLANS.
52. SET NEW BENCHMARK ON TOP OF RETAINING/DIKE WALL.
53. NEW ELECTRICAL RACK "C" IN PHASE 1. MODIFY EXISTING DIKE IN THIS AREA TO SUIT NEW PANEL. INSTALL CONDUIT 18" BELOW FINISHED GRADE (MIN.)

VOLUME CALCULATIONS AND CONFIGURATION LIMITS FOR CONTAINMENT DIKE

A. THE DIKE SHALL BE SIZED TO CONTAIN THE SHELL VOLUME OF TANK 303 PLUS THE VOLUMES INDICATED BELOW.

B. TANKS SHALL BE PLACED ON NEW RINGWALLS AND EACH TANK CHIME SHALL BE A MINIMUM OF 1.00 FOOT ABOVE THE NOMINAL DIKE FLOOR ELEVATION (NEGLECTING THE SLOPE TO THE DIKE DRAIN INLETS). ADD THE VOLUME OF TANK 303'S EXPOSED RINGWALL ACCORDINGLY – WITHOUT REGARD TO THE SLOPE OF THE TANK FLOOR. THE 12 INCH EXPOSED VERTICAL RINGWALL 'EDGE' ALLOWS FOR TELLTALE DRAINS, CP REFERENCE CELL ACCESS AND THE INTERIOR AND EXTERIOR LINER EMBEDMENTS/BATTENS.

C. ADD THE VOLUME OF TANK 302'S NEW RINGWALL AT 12" HIGH AND 8" FROM THE TANK WALL (2069.60 CU. FT.)

D. ADD THE VOLUME OF TANK 303'S NEW RINGWALL AT 12" HIGH AND 8" FROM THE TANK WALL (8,064.82 CU. FT.)

E. ADD THE VOLUME OF TANK 302 TO THE AVAILABLE DIKE VOLUME. THE VOLUME TO BE ADDED IS A FUNCTION OF THE DIKE HEIGHT, BUT ASSIGNING A 4'-4" HEIGHT (NOMINAL), ADD 6,544.98 CUBIC FEET FOR 3'-4" FEET OF THE TANK'S SHELL.

F. TANK 303 SHELL VOLUME IS 1,880,060 GALLONS OR 251,327.41 CUBIC FEET @7.48051948 GAL/CU. FT.

G. AN ALLOWANCE OF 500 CUBIC FEET SHALL BE ADDED TO THE AVAILABLE DIKE VOLUME FOR MISCELLANEOUS EQUIPMENT AND PIPING.

H. THE DIKE LINER SHALL BE COVERED WITH AN AVERAGE DEPTH OF 3" ROUNDED RIVER STONE FOR BALLAST. ADD THE APPROPRIATE DIKE VOLUME TO ACCOUNT FOR THE STONE BALLAST, BUT AT A MINIMUM, ADD 0.125 FEET TIMES THE AREA OF THE BOTTOM OF THE DIKE LESS THE TWO TANKS (7,269.61 CU. FT.).

I. ADD THE VOLUME OF THE INTERMEDIATE KNEEWALL. A CAST-IN-PLACE KNEEWALL AND A LEVEL, FLAT SURFACE SHALL BE A MINIMUM OF 18" ABOVE THE INTERIOR TOE OF THE BERMS. THE VOLUME OF THE INTERMEDIATE KNEE WALL SHOWN IS A MAXIMUM OF 906.38 CUBIC FEET.

J. FREEBOARD SHALL BE ADDED TO THE REQUIRED DIKE VOLUME. CONTRACTOR SHALL MEET NFPA 30, 1996 AND SPCC REGULATION FREEBOARD REQUIREMENTS OF 10%. THE VOLUME TO BE ALLOWED FOR FREEBOARD IS 12.88% OF TANK 303'S SHELL VOLUME (25-YEAR 24-HOUR STORM): 0.1288 X 251,327.4 CUBIC FEET = 32,370.97 CUBIC FEET.

K. THE OVERALL REQUIRED CONTAINMENT VOLUME FOR THIS CONFIGURATION WAS CALCULATED TO BE 309,053.78 CUBIC FEET.

L. UTILIZE A MINIMUM OF A 2:1 SLOPE FOR THE INTERIOR OF THE BERM. THE EXTERIOR SLOPE MAY BE SLOPED AS MUCH AS 2:1 PROVIDED THE CONTRACTOR SUBMITS AND THE ENGINEER APPROVES APPROPRIATE BORROW MATERIAL, GEOTEXTILE FABRIC, SUITABLE MATERIAL FOR FILL AND AT LEAST 95% COMPACTION.

M. THE OUTSIDE TOE OF THE BERM SHALL NOT BE ANY CLOSER THAN 10 FEET TO THE PROPERTY LINE AT ANY POINT. THIS LAYOUT UTILIZES THE 2:1 EXTERIOR SLOPE.

N. THE INTERIOR TOE OF THE BERM SHALL NOT BE ANY CLOSER THAN 15 FEET TO ANY TANK OR EXISTING EQUIPMENT. DISTANCE FROM EXISTING PIPING IS DESIRED TO NOT BE LESS THAN 10 FEET FROM THE TOE OF THE BERM.

O. BLOCK WALLS WILL NOT BE ACCEPTED. SEE CIVIL PLANS FOR POURED IN PLACE CONCRETE WALLS SHOWN.

P. THE CONTRACTOR SHALL MAINTAIN A MINIMUM OF 20 INCHES OF COVER OVER THE FUEL LINE (UNDER THE LINER/IMPERVIOUS BARRIER). BURY A SHEET OF LINER MATERIAL OVER THE UNDERGROUND LINE THAT IS 3 FEET WIDE AND APPROXIMATELY 45' LONG, 12" ABOVE THE FUEL LINE. LAY SPECIFIED HAZARD TAPE ON TOP OF THE BURIED SHEET OF LINER MATERIAL AND COVER WITH BACKFILL USING VIBRATORY EQUIPMENT. THIS ACTIVE FUEL LINE EXTENDS FROM THE ISSUE PUMPS IN THE BULK FARM TO THE AIRSIDE AND IT SHALL BE PROTECTED BY THE CONTRACTOR AT ALL TIMES. USING THE 2011 SURVEY PROVIDED IN THIS SET, WE CALCULATE THAT THE ELEVATION OF THE TOP-OF-PIPING (TOP) IS APPROXIMATELY 197.53. CONTRACTOR SHALL VACUUM PROBE THE AREA AND CONFIRM THE DEPTH (ELEVATION) OF THE FUEL LINE PRIOR TO STARTING PHASE 1.

Q. THE TOP OF THE BERM ELEVATION SHALL MATCH THE TOP OF INLET ELEVATION AT TRUCK OFFLOADING. AS A RESULT OF THIS ELEVATION, THE VOLUME OF THE CONTAINED TRUCK UNLOADING AREA SHALL NOT BE COUNTED AS AVAILABLE VOLUME FOR THE DIKE. THE CONTAINED AREA OF THE TRUCK UNLOADING AREA PERIMETER SHALL BE AT LEAST 0.25 FEET ABOVE TOP OF BERM. TRUCK DELIVERIES ARE INFREQUENT, BUT WHEN NECESSARY, TRUCK DELIVERIES ARE RECEIVED BY THE FACILITY. NO TRUCK LOADING IS UNDERTAKEN AT THE BULK FACILITY.

R. 25-YEAR 24 HOUR STORM DEPTH IS 5.50 INCHES.

REVISIONS		DATE
1	REVISED NOTE	7/11/14
2	RELOCATED FOAM EQPT. PAD	7/23/14

CURRIER & COMPANY
13323 W. Washington Blvd. Suite 206
Los Angeles, California 90066

PROJECT NAME: BRADLEY INTERNATIONAL AIRPORT
PROJECT LOCATION: FUEL STORAGE FACILITY MODIFICATIONS
DRAWING NAME: BULK FUEL FACILITY REFERENCE PLAN

BBA Aviation

Signature FLIGHT SUPPORT A BBA Aviation company

SEAL:

JONATHAN E. CURRIER
PROFESSIONAL ENGINEER
STATE OF CONNECTICUT
29037 - EXPIRES 01/31/15

DESIGNED BY:	J.E.C.	DATE:	04/30/14
DRAWN BY:	M.E.	PROJ. NO:	13007
APPROVED BY:	J.E.C.	FILE NAME:	13007G106

SHEET NUMBER: G1.06

ISSUED FOR BID

Plotted: P:\BDL – Bradley Hartford CT\13007 – BDL Design Bid Build\Dwgs\General\13007G106.dwg Thu, Jul 24, 2014 at 4:30pm – Mehdi

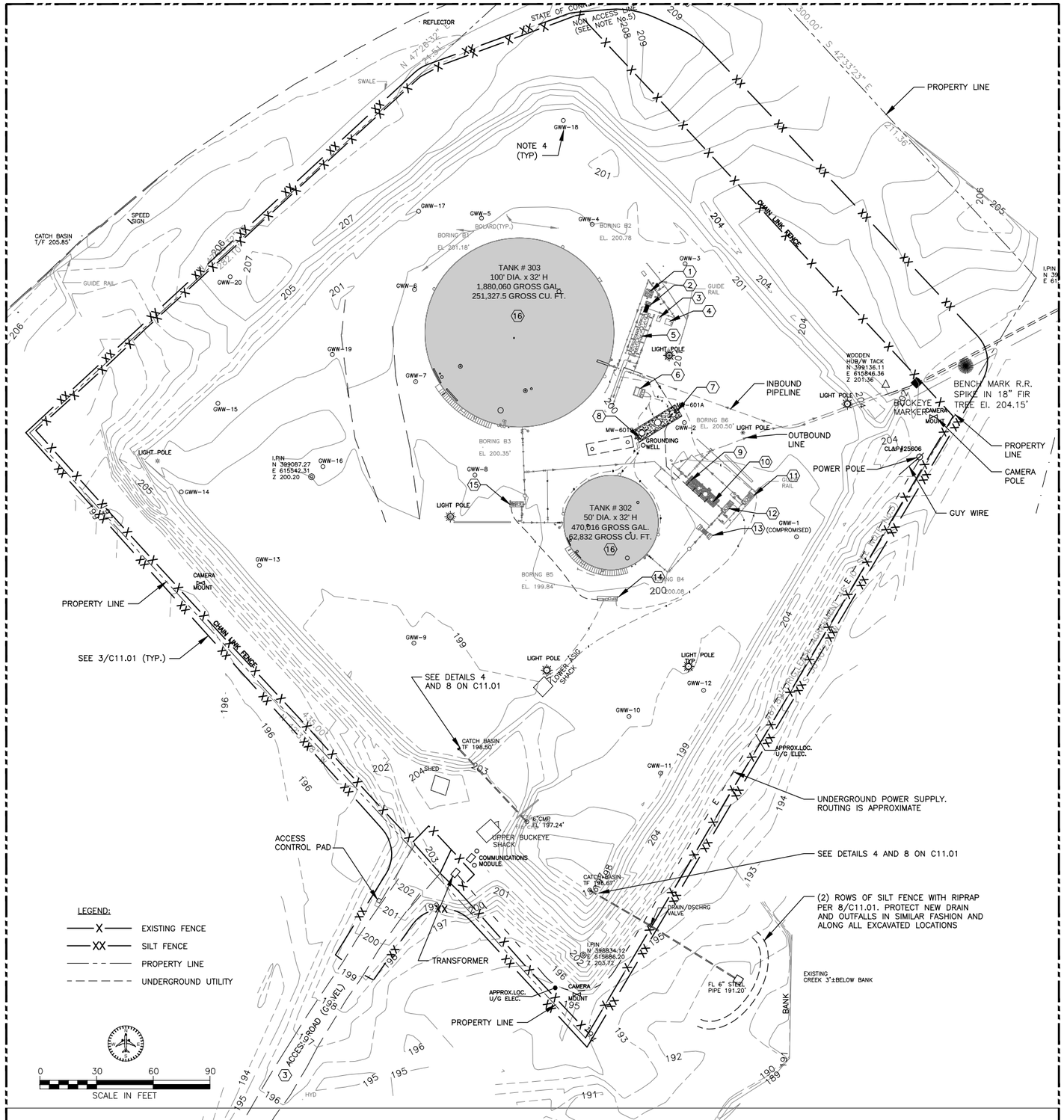

GENERAL NOTES:

1. ALL ELEVATIONS CALLED OUT ON KEYNOTES ARE TO THE TOP OF THE EXISTING PADS/FOUNDATIONS.
2. ALL ELEVATIONS ARE APPROXIMATE AND SHALL BE FIELD VERIFIED BY CONTRACTOR.
3. ALL STRUCTURES TO REMAIN IN PLACE UNLESS NOTED OTHERWISE. BATTEN LINER TO PERIMETER OF EXISTING FOUNDATIONS, PADS AND STRUCTURES UNLESS NOTED OTHERWISE. SEE DETAILS FOR BATTEN AND LINER REQUIREMENTS. SEE SV3.00 FOR EXISTING TOP OF WELL ELEVATIONS. SEE CIVIL PLANS FOR GRADES AND COORDINATE COLLAR ELEVATIONS ACCORDINGLY. CONTRACTOR SHALL LOWER, EXTEND OR REPLACE WELLS IF NECESSARY TO MEET NEW GRADES.
4. ALL GROUNDWATER WELLS HAVE CONCRETE COLLARS. REPLACE ALL GROUNDWATER WELL COLLARS FOR GROUNDWATER WELLS THAT ARE TO REMAIN. COLLARS SHALL BE AS DETAILED ELSEWHERE. WELD LINER TO HDPE EMBED.
5. EXISTING GRADES SHOWN ON THIS SHEET.
6. ACREAGE INSIDE SILT FENCE IS APPROXIMATELY 3.50 ACRES.

KEYNOTES: (X)

1. EL = 200.53
2. EL = 200.46
3. EL = 200.47
4. EL = 200.82
5. EL = 200.79
6. EL = 200.78
7. CORNER EL = 200.90
8. CORNER EL = 200.84
9. CORNER EL = 199.70
10. CORNER EL = 199.76
11. EL = 200.84
12. EL = 201.12
13. EL = 199.73
14. EL = 200.10
15. EL = 200.48
16. SEE SV3.00 FOR CHIME ELEVATIONS

SEDIMENT CONTROL NOTES:

S1. SEE C11.01 FOR DETAILS APPLICABLE TO THIS PLAN.
S2. CONTRACTOR SHALL ADAPT THE PLANS TO EACH PHASE OF WORK TO ENSURE THAT SEDIMENT DOES NOT LEAVE THE PROPERTY.
S3. THE PROPERTY IS BORDERED ON SOUTHWEST BY WETLANDS.
S4. THIS AN EXISTING CREEK AT A VARIABLE DISTANCE FROM THE PROPERTY LINE ALONG THE SOUTHEAST PERIMETER OF THE PROPERTY.
S5. SEE NOTES ON C11,01 FOR ADDITIONAL REQUIREMENTS.

DATE	REVISIONS	△

CURRIER & COMPANY
13323 W. Washington Blvd, Suite 206
Los Angeles, California 90066

PROJECT NAME: BRADLEY INTERNATIONAL AIRPORT
PROJECT LOCATION: FUEL STORAGE FACILITY MODIFICATIONS
DRAWING NAME: BULK FUEL FACILITY EXISTING SLAB/PAD TOP ELEVATIONS & SEDIMENT CONTROL PLAN

ASIG BBA Aviation
Signature FLIGHT SUPPORT A BBA Aviation company

SEAL:

JONATHAN E. CURRIER
PROFESSIONAL ENGINEER
STATE OF CONNECTICUT
29037 - EXPIRES 01/31/15

DESIGNED BY:	J.E.C.	DATE:	04/30/14
DRAWN BY:	J.E.B.	PROJ. NO:	13007
APPROVED BY:	J.E.C.	FILE NAME:	13007G110

SHEET NUMBER: G1.10

ISSUED FOR BID

Plotted: P:\BDL – Bradley Hartford CT\13007 – BDL Design Bid Build\Dwgs\General\13007G110.dwg Fri, Jun 27, 2014 at 12:07pm – Mehdi

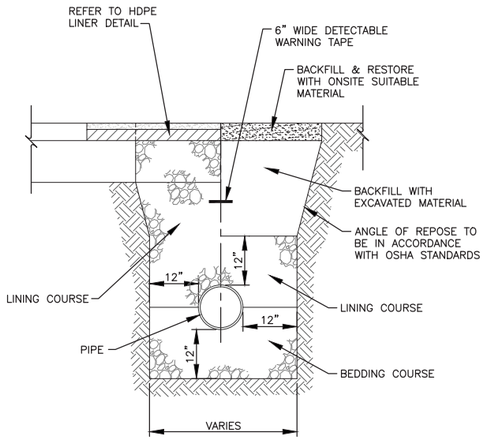

1 TRENCH RESTORATION DETAIL

C4.01 C4.04 SCALE: NONE

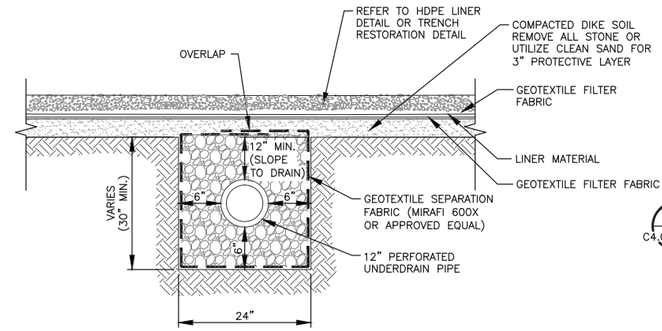

4 UNDERDRAIN DETAIL

C4.01 C4.04 SCALE: NONE

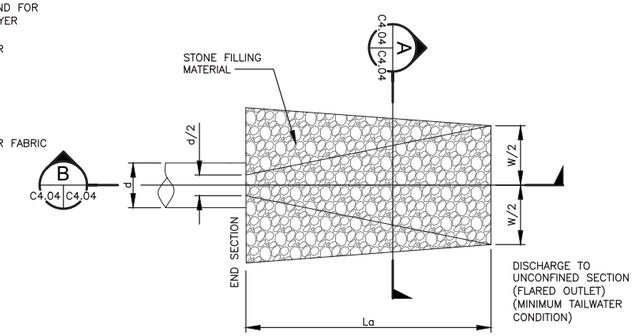

PLAN

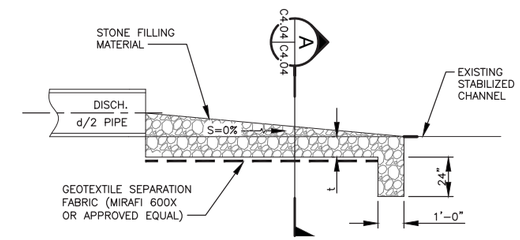

SECTION B-B

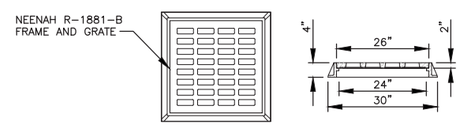

CATCH BASIN FRAME AND GRATE

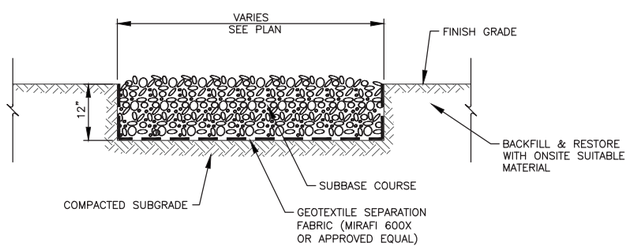

3 GRAVEL ACCESS DRIVE DETAIL

C4.01 C4.04 SCALE: NONE

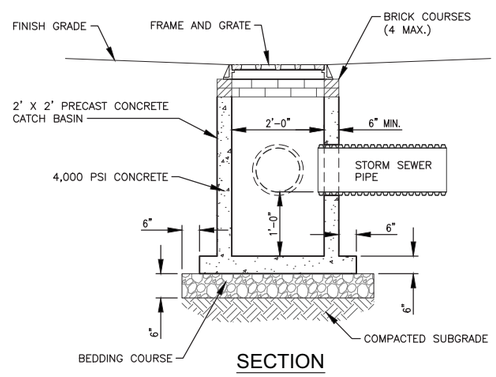

SECTION

5 2' X 2' CATCH BASIN DETAIL

C4.01 C4.04 SCALE: NONE

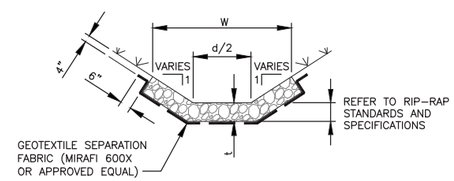

SECTION A-A

6 ROCK OUTLET PROTECTION DETAIL

C4.01 C4.04 SCALE: NONE

DATE	REVISIONS	△

CURRIER & COMPANY
13323 W. Washington Blvd, Suite 206
Los Angeles, California 90066

C&S Engineers, Inc.
499 Col. Eileen Collins Blvd.
Syracuse, New York 13212
Phone: 315-455-2020
Fax: 315-455-9697
www.cscos.com

PROJECT NAME: BRADLEY INTERNATIONAL AIRPORT

PROJECT LOCATION: FUEL STORAGE FACILITY MODIFICATIONS

DRAWING NAME: BULK FUEL FACILITY DRAINAGE DETAILS SHEET 1

ASIG BBA Aviation

Signature FLIGHT SUPPORT A BBA Aviation company

SEAL:

DESIGNED BY:	W.G.P.	DATE:	05/22/14
DRAWN BY:	M.Z.	PROJ. NO.	13007
APPROVED BY:	M.J.C.	FILE NAME	13007C404

SHEET NUMBER: C4.04

ISSUED FOR BID

Plotted: F:\Project\N81 – Currier & Co\N81001001 – BDL Fuel Facility\Design\CADD\Sheet Files\13007C404.dwg Tue, Jun 24, 2014 at 9:25am – mikeb

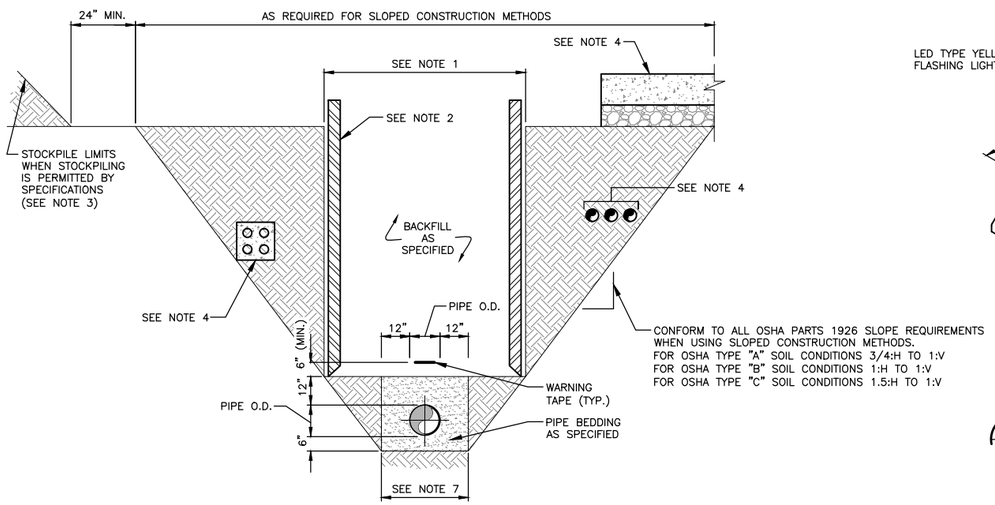

NOTES:
1. AS REQUIRED FOR SHEET, SHORED, PILED OR SHIELDED CONSTRUCTION METHODS
2. CONFORM TO ALL OSHA PART 1926 REQUIREMENTS FOR SHEETING, SHORING AND SHIELDED CONSTRUCTION METHODS
3. SLOPE, SHEET, SHORE, PILE OR SHIELD AS REQUIRED FOR SITE CONDITIONS AND SAFETY.
4. SLOPED CONSTRUCTION METHODS MAY BE PRECLUDED BY EXISTING SITE CONDITIONS, INFRASTRUCTURE AND CONSTRUCTION SUCH AS PERMISSIBLE PAVEMENT REMOVAL LIMITS, UTILITIES, STRUCTURES AND OPERATIONS.
5. TRENCH SECTION IS SHOWN TO HELP DEFINE TYPICAL EXCAVATION REQUIREMENTS AND SHALL NOT BE CONSTRUED AS DEFINING OR DICTATING ALL MEASURES NECESSARY TO PERFORM THE WORK OR KEEP THE EXCAVATION SAFE. THE CONTRACTOR IS ENTIRELY RESPONSIBLE FOR ALL EXCAVATION SAFETY.
6. EXCAVATION SECTION SIMILAR FOR DUCTBANKS AND OTHER UTILITIES.
7. REQUIRED FOR INSTALLATION OF NEW PIPING.

1 TYPICAL TRENCH EXCAVATION
SCALE: NONE

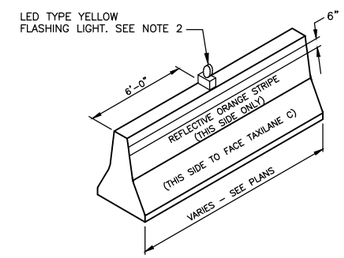

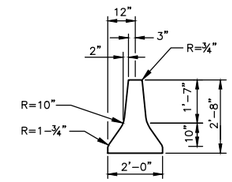

NOTES:
1. BARRICADES TO BE PLACED END TO END (EXCEPT FOR OPENINGS) TO FORM A SOLID BARRIER WALL. PIN JERSEY BARRICADE ENDS PER CT DOT STANDARDS.
2. FLASHING YELLOW LIGHTS SHALL BE BATTERY OPERATED AND OPERATE INDEPENDENTLY OF EACH OTHER. PROVIDE AT ALL AIRSIDE LOCATIONS

2 TYPICAL BARRICADE AT FUEL FACILITY
SCALE: NONE

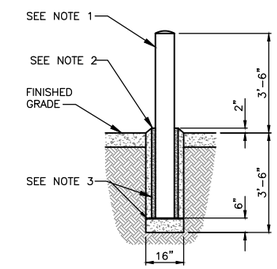

NOTES:
1. 8" DIA. SCH. 40 STEEL PIPE. FILL WITH CONCRETE AND CROWN TOP. PREPARE SURFACE AS RECOMMENDED BY PAINT MANUFACTURER, PRIME AND PAINT WITH MIN. OF 10 MILS (DRY FILM) OF REFLECTIVE YELLOW GLOSS POLYAMIDE EPOXY.
2. FILL GAP BETWEEN SLEEVE AND POST WITH SILICONE SEALANT (½" DEPTH).
3. GUARD POST, 10" SCH. 40 STEEL PIPE SLEEVE WITH END PLATE ¼" x 14" SQ. (FILL WITH SAND AS REQAUIRED TO SECURE 8" POST).

3 8" REMOVABLE GUARD POST / BOLLARD
SCALE: NONE (PAVED AREA)

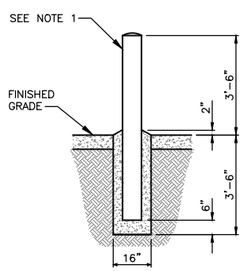

NOTES:
1. 8" DIA. SCH. 40 STEEL PIPE. FILL WITH CONCRETE AND CROWN TOP. PREPARE SURFACE AS RECOMMENDED BY PAINT MANUFACTURER, PRIME AND PAINT WITH MIN. OF 10 MILS (DRY FILM) OF REFLECTIVE YELLOW GLOSS POLYAMIDE EPOXY.

4 8" GUARD POST / BOLLARD
SCALE: NONE (PAVED AREA)

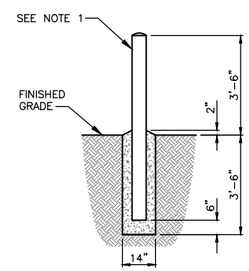

NOTES:
1. 6" DIA. SCH. 40 STEEL PIPE. FILL WITH CONCRETE AND CROWN TOP. PREPARE SURFACE AS RECOMMENDED BY PAINT MANUFACTURER, PRIME AND PAINT WITH MIN. OF 10 MILS (DRY FILM) OF REFLECTIVE YELLOW GLOSS POLYAMIDE EPOXY.

5 6" GUARD POST / BOLLARD
SCALE: NONE (UNPAVED AREA)

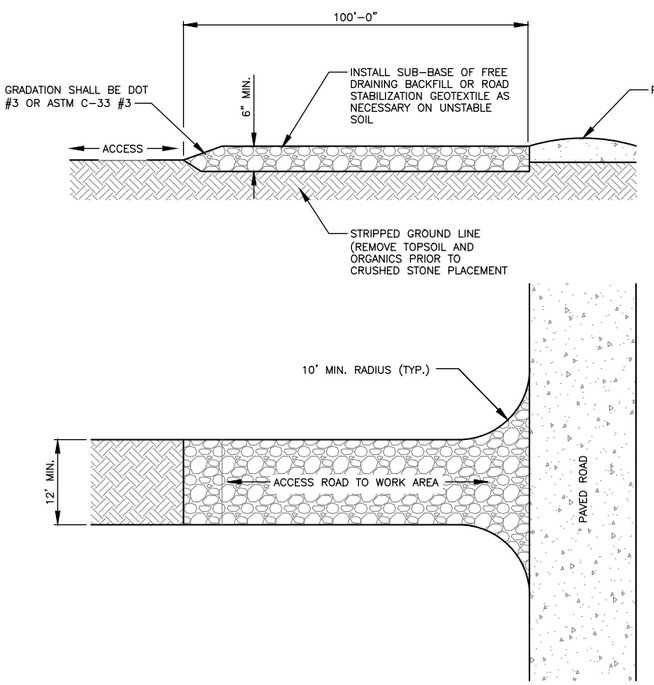

1 6 CONSTRUCTION ENTRANCE
SCALE: NONE

REVISIONS		DATE
1	ADDED DETAIL 6	7/23/14

CURRIER & COMPANY
13323 W. Washington Blvd. Suite 206
Los Angeles, California 90066

PROJECT NAME: BRADLEY INTERNATIONAL AIRPORT
PROJECT LOCATION: FUEL STORAGE FACILITY MODIFICATIONS
DRAWING NAME: BOLLARD & TRENCH DETAILS

ASIG BBA Aviation
Signature FLIGHT SUPPORT A BBA Aviation company

SEAL:

JONATHAN E. CURRIER
PROFESSIONAL ENGINEER
STATE OF CONNECTICUT
29037 - EXPIRES 01/31/15

DESIGNED BY:	J.E.C.	DATE:	04/30/14
DRAWN BY:	M.E.	PROJ. NO:	13007
APPROVED BY:	J.E.C.	FILE NAME:	13007C901

SHEET NUMBER: C9.01

ISSUED FOR BID

Plotted: P:\BDL - Bradley Hartford CT\13007 - BDL Design Bid Build\Dwgs\Civil\13007C0901.dwg Mon, Jul 21, 2014 at 12:47pm - Mehdi

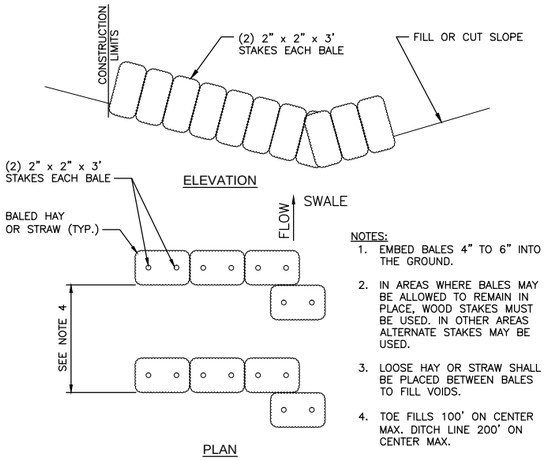

NOTES:
1. EMBED BALES 4" TO 6" INTO THE GROUND.
2. IN AREAS WHERE BALES MAY BE ALLOWED TO REMAIN IN PLACE, WOOD STAKES MUST BE USED. IN OTHER AREAS ALTERNATE STAKES MAY BE USED.
3. LOOSE HAY OR STRAW SHALL BE PLACED BETWEEN BALES TO FILL VOIDS.
4. TOE FILLS 100' ON CENTER MAX. DITCH LINE 200' ON CENTER MAX.

1 STRAW BALE EROSION CHECK
SCALE: NONE

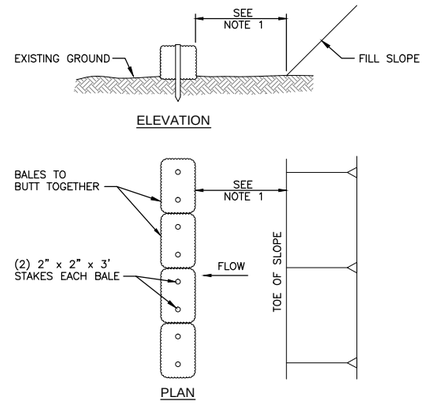

NOTES:
1. DISTANCE AS SPECIFIED IN THE STORMWATER POLLUTION PREVENTION PLAN.

2 STRAW BALE SILT BARRIER
SCALE: NONE

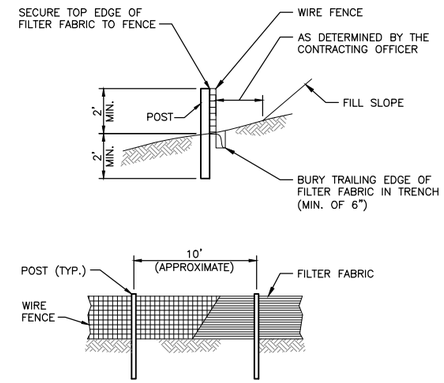

3 FILTER FABRIC SILT FENCE
SCALE: NONE

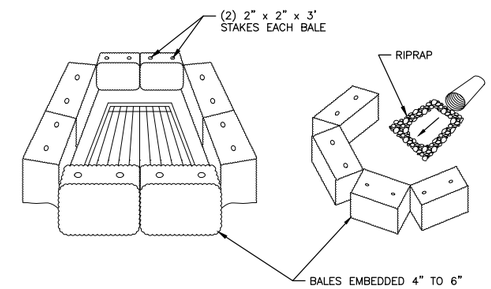

4 STRAW BALE FILTER
SCALE: NONE

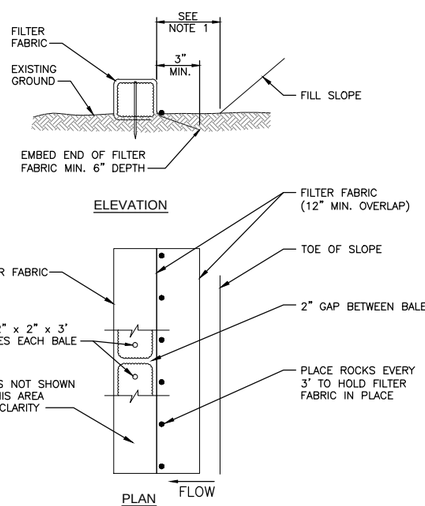

NOTES:
1. AS DETERMINED BY THE CONTRACTING OFFICER

5 STRAW BALES & FILTER FABRIC SILT FENCE
SCALE: NONE

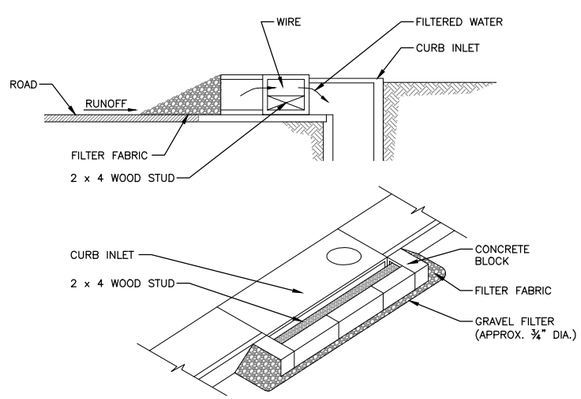

NOTES:
1. INSPECT AND REPAIR FILTERS AFTER EACH STORM EVENT. REMOVE SEDIMENT WHEN ONE HALF OF THE FILTER DEPTH HAS BEEN FILLED.
2. SEDIMENT AND GRAVEL SHALL BE IMMEDIATELY REMOVED FROM TRAVELED WAY OF ROAD.

6 CURB INLET FILTER
SCALE: NONE

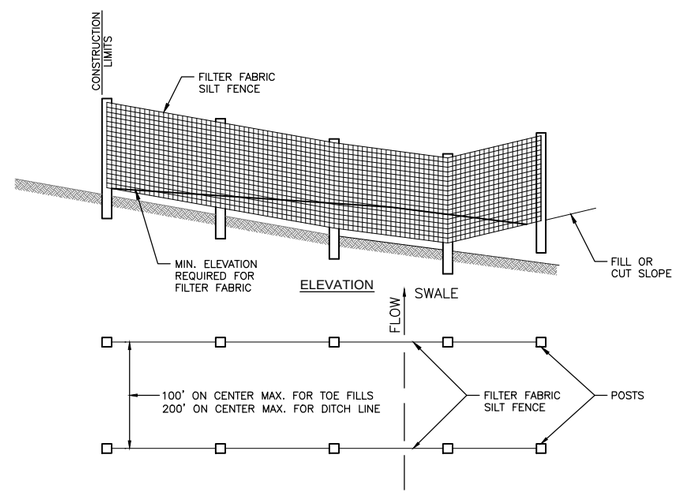

7 SILT FENCE EROSION CHECK
SCALE: NONE

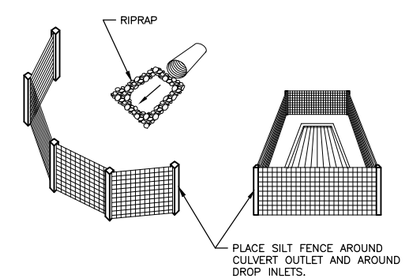

8 SILT FENCE FILTER
SCALE: NONE

NOTES:
1. SEE G1.10. SEDIMENT TRAPS, EROSION CHECKS, AND / OR FILTERS SHALL BE CONSTRUCTED PRECEDING OR FOLLOWING ALL CULVERT OR OTHER DRAINS AND IN ALL DITCHES BEFORE THE WATER (RUNOFF) LEAVES THE PROJECT CONSTRUCTION LIMITS OR ENTERS A STREAM, AND AT OTHER LOCATIONS AS SPECIFIED IN THE CONTRACTOR'S WRITTEN STORMWATER POLLUTION PREVENTION PLAN (SWPPP).
2. SEDIMENT TRAPS SHALL BE CLEANED OF ACCUMULATED SEDIMENT WHEN APPROXIMATELY 75% FILLED WITH SUCH SEDIMENT.
3. TEMPORARY SLOPE DRAINS (BERMS, DRAINS, AND RIPRAP, IF NECESSARY) SHALL BE USED AS THE EMBANKMENT IS CONSTRUCTED. LOCATION AND SPACING OF THE DRAIN ASSEMBLY SHALL BE SPECIFIED IN SWPPP. ALL SLOPE DRAINS SHALL BE IN PLACE BY THE END OF EACH WORK SHIFT. DRAIN ASSEMBLIES SHALL BE USED UNTIL THE SLOPES ARE PROTECTED WITH PERMANENT SOIL EROSION CONTROL MEASURES.
4. ALL DIMENSIONS AND LOCATIONS OF TEMPORARY SOIL EROSION AND WATER POLLUTION CONTROL DEVICES SHALL BE SUBJECT TO ADJUSTMENT, AS SPECIFIED IN THE SWPPP.
5. WHEN THE TEMPORARY SOIL EROSION AND WATER POLLUTION CONTROL DEVICES ARE NO LONGER REQUIRED FOR THE INTENDED PURPOSE, IN THE OPINION OF THE CONTRACTING OFFICER, THEY SHALL BE OBLITERATED OR REMOVED.
6. MATERIALS FOR FILTER FABRIC FENCE SHALL CONSIST OF STANDARD MOVEN LIVESTOCK WIRE, A MINIMUM OF 24" HEIGHT, A MINIMUM OF 14 GAGE WIRE, WITH A MAXIMUM MESH SPACING OF 6", POSTS SHALL BE EITHER WOOD OR STEEL, MINIMUM LENGTH OF 4'. FABRIC SHALL MEET THE REQUIREMENTS IN AASHTO M 288, SEDIMENT CONTROL, WIRE FENCE SUPPORTED OR SELF-SUPPORTED.

DATE
REVISIONS

CURRIER & COMPANY
13323 W. Washington Blvd, Suite 206
Los Angeles, California 90066

PROJECT NAME: BRADLEY INTERNATIONAL AIRPORT
PROJECT LOCATION: FUEL STORAGE FACILITY MODIFICATIONS
DRAWING NAME: SILTATION & EROSION CONTOL DETAILS

ASIG BBA Aviation
Signature FLIGHT SUPPORT A BBA Aviation company

SEAL:

JONATHAN E. CURRIER
PROFESSIONAL ENGINEER
STATE OF CONNECTICUT
29037 - EXPIRES 01/31/15

DESIGNED BY:	J.E.C.	DATE:	12/03/13
DRAWN BY:	M.E.	PROJ. NO.	13007
APPROVED BY:	J.E.C.	FILE NAME:	13007C1101

SHEET NUMBER: C11.01

ISSUED FOR BID