NEW BRITAIN – HARTFORD BUSWAY

HARTFORD, CT

PERMITTING SUBMISSION

NOVEMBER 13, 2009

UNION STATION

State Project No. 88-H039

RECEIVED
AUG 12 2010
INLAND WATER RESOURCES DIVISION

S E A

S E A CONSULTANTS INC.
Scientists/Engineers/Architects

1. INTRODUCTION 2

1.0. PROJECT DESCRIPTION 2
1.1. PURPOSE OF REPORT 2
1.2. DATA COLLECTION 2

2. ANALYSIS METHODOLOGY 2

2.0. DESIGN CRITERIA 2
2.1. DESIGN METHODOLOGY 2
2.2. ASSUMPTIONS 3

3. STATION ANALYSIS AND SUMMARIES 4

3.0. UNION STATION 4
3.0.1. EXISTING CONDITION 4
3.0.2. PROPOSED CONDITION 4
3.0.3. ENVIRONMENTAL ISSUES AND STORMWATER TREATMENT 5
3.0.4. SOIL EROSION AND SEDIMENTATION CONTROL 6

4. APPENDIX A: DESIGN CHECKLIST 7

5. APPENDIX B: WATERSHED MAPPING AND EXHIBITS 8

6. APPENDIX C: HYDROLOGIC AND HYDRAULIC CALCULATIONS 9

7. APPENDIX D: DRAINAGE, GRADING, AND SOIL EROSION AND SEDIMENTATION CONTROL PLANS 10

8. APPENDIX E: CTDOT PRELIMINARY DESIGN COMMENT RESPONSES ... 11

9. APPENDIX F: CTDEP ATTACHMENT H1 AND H2 12

1. Introduction

1.0. Project Description

This project involves the design of eleven transit stations along an exclusive bus rapid transit (BRT) line. The BRT alignment and stations are within New Britain, Newington, West Hartford, and Hartford, Connecticut. Each site involves the design and construction of pedestrian and vehicular facilities for the busway operation. The site locations are typically urban sites that have been previously developed.

1.1. Purpose of Report

This report presents the preliminary drainage design for the BRT station sites. It provides information regarding the coordination with the proposed mainline drainage systems and data for use in preparing permitting applications.

1.2. Data Collection

In accordance with the Connecticut Department of Transportation Drainage Manual, the communities were solicited for input on existing drainage issues and concerns about the station drainage designs. Letters were sent to the Department of Public Works Directors and Town/City engineers in New Britain, Newington, West Hartford, and Hartford. A response was not received from Hartford. A request will be sent again.

2. Analysis Methodology

2.0. Design Criteria

The drainage design of the station sites was prepared in accordance with the 2000 Connecticut Department of Transportation Drainage Manual. Additional criteria of the Connecticut Department of Environmental Protection 2004 Stormwater Quality Manual was also considered.

The rational method was used to calculate peak flows within the station sites. The Intensity/Duration/Frequency (IDF) curves used in the hydrologic analyses was from the Connecticut Department of Transportation Drainage Manual (Table B-2.1).

2.1. Design Methodology

The rational method was used to compare the existing drainage to the proposed drainage design at the boundaries and critical points near the site. Design points to accurately represent the change in flow from the existing to the proposed condition. Weighted C values were calculated to represent surface types.

2.2. Assumptions

Drainage areas were delineated using project area mapping provided by the Department. Additional detailed delineation was performed by a field visit to the area on August 21, 2009.

Runoff coefficients were determined based on land cover. Two types were identified within the station limits- paved and grassed areas. The runoff coefficients were determined as 0.9 and 0.3, respectively. Due to the small size of the station sites and small proposed drainage collection areas, the time of concentration of all on-site drainage sub-areas was assumed to be five minutes.

3. Station Analysis and Summaries

3.0. Union Station

3.0.1. Existing Condition

The Union Station busway area is proposed on Spruce Street, within an existing sidewalk and parking lot area. In general, the site drains from west to east and is collected by a catch basin system within the parking lot and within the street. The area totals approximately 0.76 acres and is 100% impervious.

A portion of the parking area drains to a catch basin within the parking lot with an area of 0.55 acres. See Exhibit 3.10-A. The discharge to this catch basin, A, is summarized, as follows:

Storm Frequency	Q_{PRE} (cfs)
2-year	2.28
10-year	2.97
25-year	3.32
100-year	3.86

The Spruce Street catch basin, B, collects half the flow on the street as well as part of the intersection of Spruce and Church Street. This area totals 0.21 acres. The discharge to this catch basin is summarized, as follows:

Storm Frequency	Q_{PRE} (cfs)
2-year	0.87
10-year	1.13
25-year	1.27
100-year	1.47

Both catch basins identified connect to storm drain systems draining to the south. The two lines join within Spruce Street and continue as a 48-inch pipeline towards Asylum Street and Bushnell Park.

3.0.2. Proposed Condition

No new stormwater inlets are proposed as part of the station construction. The parking lot will continue to flow from west to east and be collected upstream of Spruce Street. The busway platform will drain to the street and be collected by the existing catch basin at the corner of Spruce and Church. (See Exhibit 3.10-B.). The site will remain nearly 100% impervious.

The construction of the station platform will reduce the area tributary to the parking lot catch basin, A, from 0.55 acres to 0.52 acres. The site discharge tributary to this catch basin is summarized, as follows:

Storm Frequency	Q_{Post} (cfs)
2-year	2.15
10-year	2.81
25-year	3.14
100-year	3.65

The Spruce Street catch basin, B, tributary area will increase slightly from 0.21 acres to 0.24 acres. The site discharge tributary to this inlet, B, is summarized, as follows:

Storm Frequency	Q_{Post} (cfs)
2-year	0.99
10-year	1.30
25-year	1.45
100-year	1.68

Both Catch Basin A and Catch Basin B are tributary to the 48-inch RCP in Spruce Street, as indicated in the survey data with drainage arrows along the pipelines. This small area swap between basins is small and will have a negligible impact on the existing drainage systems. The combined runoff to Catch Basins A and B is summarized, as follows:

Storm Frequency	Q_{PRE} (cfs)	Q_{POST} (cfs)	ΔQ (cfs)
2-year	3.15	3.15	0.00
10-year	4.10	4.10	0.00
25-year	4.58	4.58	0.00
100-year	5.34	5.34	0.00

The existing 12″ RCP within the limits of the parking area will be removed and replaced with two 12″ RCPs joined by a manhole. This relocation and alteration eliminates conflicts under the proposed platform area.

3.0.3. Environmental Issues and Stormwater Treatment

No Department flagged wetland areas are located within the station site boundaries. No impacts are proposed.

The site area is entirely paved and developed in the existing condition. No structural BMP devices are proposed.

3.0.4. Soil Erosion and Sedimentation Control

The soil erosion and sedimentation control design complies with the Department of Environmental Protection 2002 Connecticut Guidelines for Soil Erosion and Sediment Control. The design contains provisions for silt fences along with inlet protection.

4. Appendix A: Design Checklist

Project No.	88-H039
Roadway	UNION STATION
Town	HARTFORD
Date	9/30/2009
Designed By	SEA CONSULTANTS
Signature of Engineer	[illegible]

Drainage Design Checklist (Plans 50% Complete)

Allow a 6-8 week review time

See ***Note*** below.

Semi-Final Design Checklist (Plans 60% to 70% Complete)

Allow a 5-6 week review time

Note: A separate, earlier drainage submission (at approximately 50% completion) may be required if the drainage design is particularly complicated, requires significant right of way and/or otherwise might jeopardize the schedule of the project. **This checklist MUST accompany both of these submissions.**

Indicate which submission this checklist is for and include the following information:

☐ *Drainage Design Submission* ☒ *Semi-Final Design Submission*

a. Draft Drainage Report

1. Disposition of Preliminary Design/Drainage Design Submission comments with written responses justifying comments not incorporated.
   ☒ Included ☐ Not Included ☐ Not Applicable
2. A condition survey of the existing drainage pipes and structures that are to remain in use should be investigated for structural adequacy and documented. (See Section 3.6.3.)
   ☐ Included ☐ Not Included ☒ Not Applicable
3. The condition of existing ditches that are to remain in use should be field inspected, analyzed and results documented to verify their stability and the need for cleaning and reshaping.
   ☐ Included ☐ Not Included ☒ Not Applicable
4. The condition of the outlet at the existing discharge points should be investigated and documented to ensure no erosion or sediment problems exist. If outlet protection is required, it should be incorporated into the project and computations submitted.
   ☐ Included ☐ Not Included ☒ Not Applicable

5. A condition survey report including items 2, 3, and 4 above. (See Appendix A and B, Chapter 4)
   ☐ Included ☐ Not Included ☒ Not Applicable
6. Drainage design computations should include gutter flow analysis, storm sewer design, and hydraulic gradeline (HGL). The hydraulic gradeline should be analyzed to ensure 0.3m (1 ft) freeboard is maintained at drainage structures. This analysis should consider all friction, entrance, junction, exit and bend losses. Designer to verify that the proposed drainage will not adversely impact the existing downstream storm system or property owners. (See Chapter 11, Storm Drainage Systems.)
   ☐ Included ☐ Not Included ☒ Not Applicable
7. Drainage computations should identify structures by station and offset rather than by a numerical identifier. If station and offset is not feasible for the computations then include an index with the location of the structure corresponding to its numerical identifier. The watershed map should be prepared accordingly.
   ☐ Included ☐ Not Included ☒ Not Applicable
8. Existing drainage systems shall be analyzed for hydraulic adequacy to meet the proposed conditions and, if found inadequate, an upgrade will be designed in conformance with the criteria established in the Drainage Manual.
   ☐ Included ☐ Not Included ☒ Not Applicable
9. All roadway drainage systems should be brought to a suitable outlet.
   ☐ Included ☐ Not Included ☒ Not Applicable
10. If upgrading of pipes downstream of the project is necessary, then additional rights may need to be acquired.
    ☐ Included ☐ Not Included ☒ Not Applicable
11. The need for temporary drainage should be addressed. Temporary drainage computations should be prepared in accordance with criteria in the Drainage Manual. (See Section 3.6.11.)
    ☐ Included ☐ Not Included ☒ Not Applicable
12. Proposed swales, ditches and channels should be designed in accordance with HEC-15 for discharges 1.42 m^3/s (50 ft^3/s) and less or HEC-11 for discharges in excess of 1.42 m^3/s (50 ft^3/s). (See Chapter 7, Channels.)
    ☐ Included ☐ Not Included ☒ Not Applicable
13. Minor and small cross culvert design computations with culvert data sheet. (See Chapter 8, Culverts.)
    ☐ Included ☐ Not Included ☒ Not Applicable
14. Topographic mapping with watershed area delineated for each inlet and/or cross culverts as required to perform the drainage calculations. The flow path used in the time of concentration calculation and coefficient of imperviousness should be shown for each area. (See Chapter 6, Hydrology.)
    ☒ Included ☐ Not Included ☐ Not Applicable
15. Diversion identified.
    ☐ Included ☐ Not Included ☒ Not Applicable
16. All plans, computations and reports identify the responsible engineers who prepared and checked the work.
    ☒ Included ☐ Not Included ☐ Not Applicable

b. Plans, Profiles and Cross Sections

1. The existing and proposed storm drainage shown to their outlets.
   ☒ Included ☐ Not Included ☐ Not Applicable
2. Size and type of existing drainage pipes/structures and disposition of pipes/structures to be abandoned.
   ☐ Included ☐ Not Included ☒ Not Applicable
3. Properties affected by diversions should be shown on the plans so that proper rights can be acquired.
   ☐ Included ☐ Not Included ☒ Not Applicable
4. Drainage Rights and Easements.
   ☐ Included ☐ Not Included ☒ Not Applicable
5. Outlet Protection shown on plans and details provided.
   ☐ Included ☐ Not Included ☒ Not Applicable
6. Intersection grading plans to ensure inlets are located at the low points to alleviate ponding/icing conditions. Top of frame elevation should be shown.
   ☐ Included ☐ Not Included ☒ Not Applicable
7. In areas where cross culverts are being extended, replaced, or where outlet protection is proposed a profile or cross section of the natural ground should be provided to show how the inverts will tie into the existing topography.
   ☐ Included ☐ Not Included ☒ Not Applicable
8. The top of frame and invert elevations for each storm drainage structure shown. Proposed drainage structures shall be identified by station and offset on cross sections.
   ☒ Included ☐ Not Included ☐ Not Applicable
9. Existing and proposed drainage patterns (flow arrows) of pipes, ditches, channel and swales.
   ☒ Included ☐ Not Included ☐ Not Applicable
10. Details for any special drainage structures not found in the Standard Drawings.
    ☐ Included ☐ Not Included ☒ Not Applicable
11. The direction of flow should be shown by arrows to 61m (200 ft.) beyond any drainage outlet, or shown to terminate by dissipation or entrance into a watercourse or body of water.
    ☐ Included ☐ Not Included ☒ Not Applicable

c. Structures with drainage areas > 2.59 km^2 (1 mi^2)

1. Draft hydraulic design report.
   ☐ Included ☐ Not Included ☒ Not Applicable
2. Draft scour report when the proposed structure spans the waterway.
   ☐ Included ☐ Not Included ☒ Not Applicable
3. Draft floodway report.
   ☐ Included ☐ Not Included ☒ Not Applicable
4. Draft SCEL report.
   ☐ Included ☐ Not Included ☒ Not Applicable
5. Draft scour report if required.
   ☐ Included ☐ Not Included ☒ Not Applicable

Provide justification for items **Not Included**. Justification should correspond to letter and number.

5. Appendix B: Watershed Mapping and Exhibits

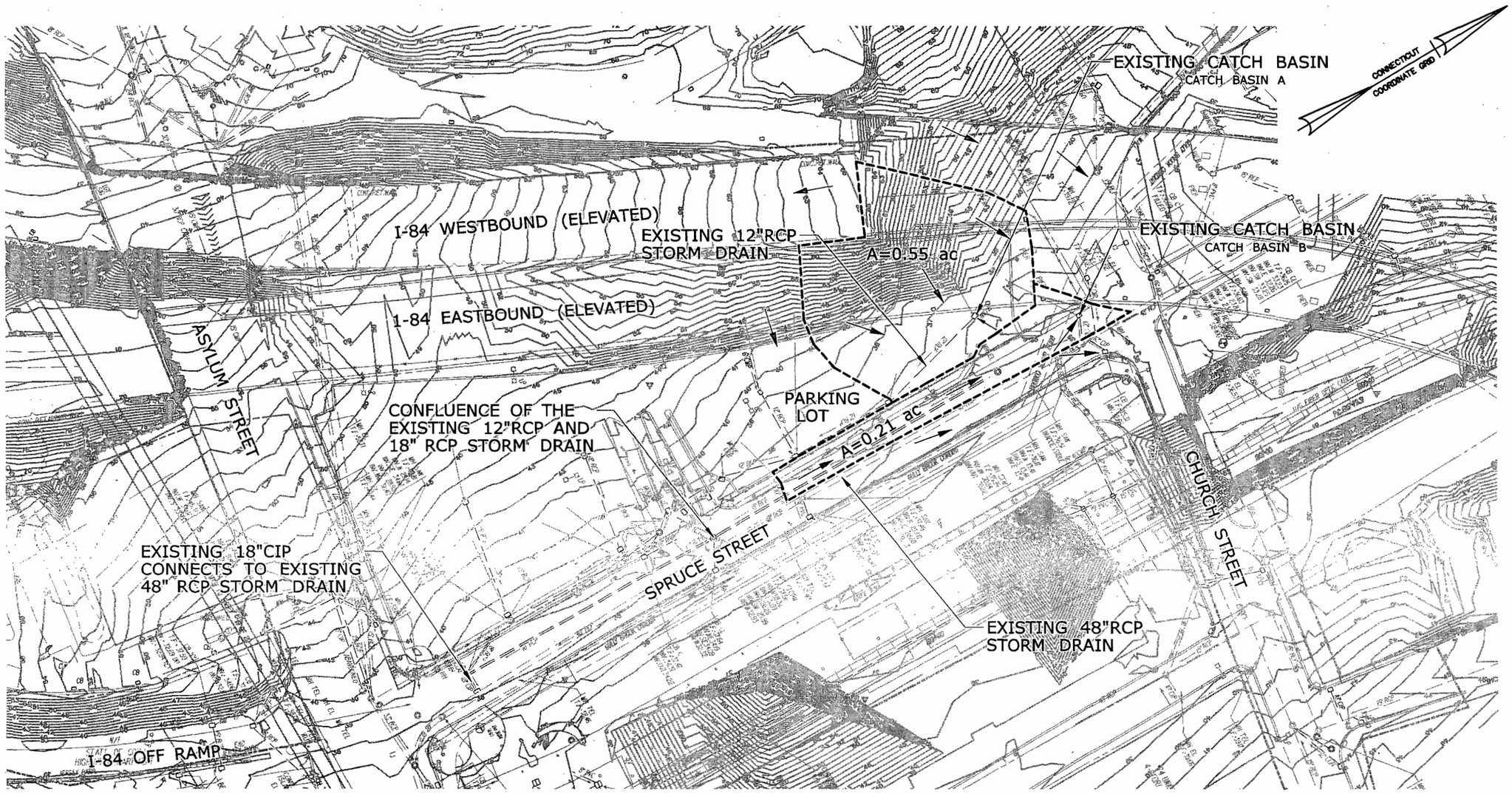

NOTE: WATERSHEDS DELINEATED BY FIELD INSPECTION ON 8-21-09

EXISTING CONDITIONS

SCALE 1" = 80'

160 80 0 160

STATE PROJECT NO.: 88-H039 COUNTY: HARTFORD CITY/TOWN: HARTFORD	APPLICATION BY: STATE OF CONNECTICUT DEPARTMENT OF TRANSPORTATION	OFFICE OF ENGINEERING SCALE 1=80	DATE: NOVEMBER 2009 SITE: UNION STATION EXHIBIT: 3.10-A

PROPOSED CONDITIONS

SCALE 1" = 80'

160 80 0 160

STATE PROJECT NO.: 88-H039	APPLICATION BY: STATE OF CONNECTICUT DEPARTMENT OF TRANSPORTATION	OFFICE OF ENGINEERING	DATE: NOVEMBER 2009
COUNTY: HARTFORD			SITE: UNION STATION
CITY/TOWN: HARTFORD		SCALE 1=80	EXHIBIT: 3.10-B

6. Appendix C: Hydrologic and Hydraulic Calculations

SEA Consultants, Inc.
Scientist/Engineers/Architects
200 Corporate Place
Rocky Hill, Connecticut 06067

PROJECT:	New Britain - Hartford Bus Rapid Transit Stations		
PROJECT NO.	88-H039	SHEET NO.	1
CALCULATED BY:	KSR	DATE:	11/5/2009
CHECKED BY:	EAD	DATE:	11/6/2009

Runoff Calculations for the 2, 10, 25, 100 Year Storms
Union Station

System: Spruce Street Drainage System

Pre- Development

Design Point	Area (Acres)	C Value	2yr Rainfall (in/hr)	10yr Rainfall (in/hr)	25yr Rainfall (in/hr)	100yr Rainfall (in/hr)	Q_{2yr} (cfs)	Q_{10yr} (cfs)	Q_{25yr} (cfs)	Q_{100yr} (cfs)
A	0.55	0.90	4.60	6.00	6.70	7.80	2.28	2.97	3.32	3.86
B	0.21	0.90	4.60	6.00	6.70	7.80	0.87	1.13	1.27	1.47
						Total Q =	3.15	4.10	4.58	5.34

Post- Development

Design Point	Area (Acres)	C Value	2yr Rainfall (in/hr)	10yr Rainfall (in/hr)	25yr Rainfall (in/hr)	100yr Rainfall (in/hr)	Q_{2yr} (cfs)	Q_{10yr} (cfs)	Q_{25yr} (cfs)	Q_{100yr} (cfs)
A	0.52	0.90	4.60	6.00	6.70	7.80	2.15	2.81	3.14	3.65
B	0.24	0.90	4.60	6.00	6.70	7.80	0.99	1.30	1.45	1.68
						Total Q =	3.15	4.10	4.58	5.34
						Delta =	0.00	0.00	0.00	0.00

Note:

1.) Calculations based on Rational Method, Q = CiA
2.) Design Points designated on Exhibit 3.10-A and 3.10-B

7. Appendix D: Drainage, Grading, and Soil Erosion and Sedimentation Control Plans

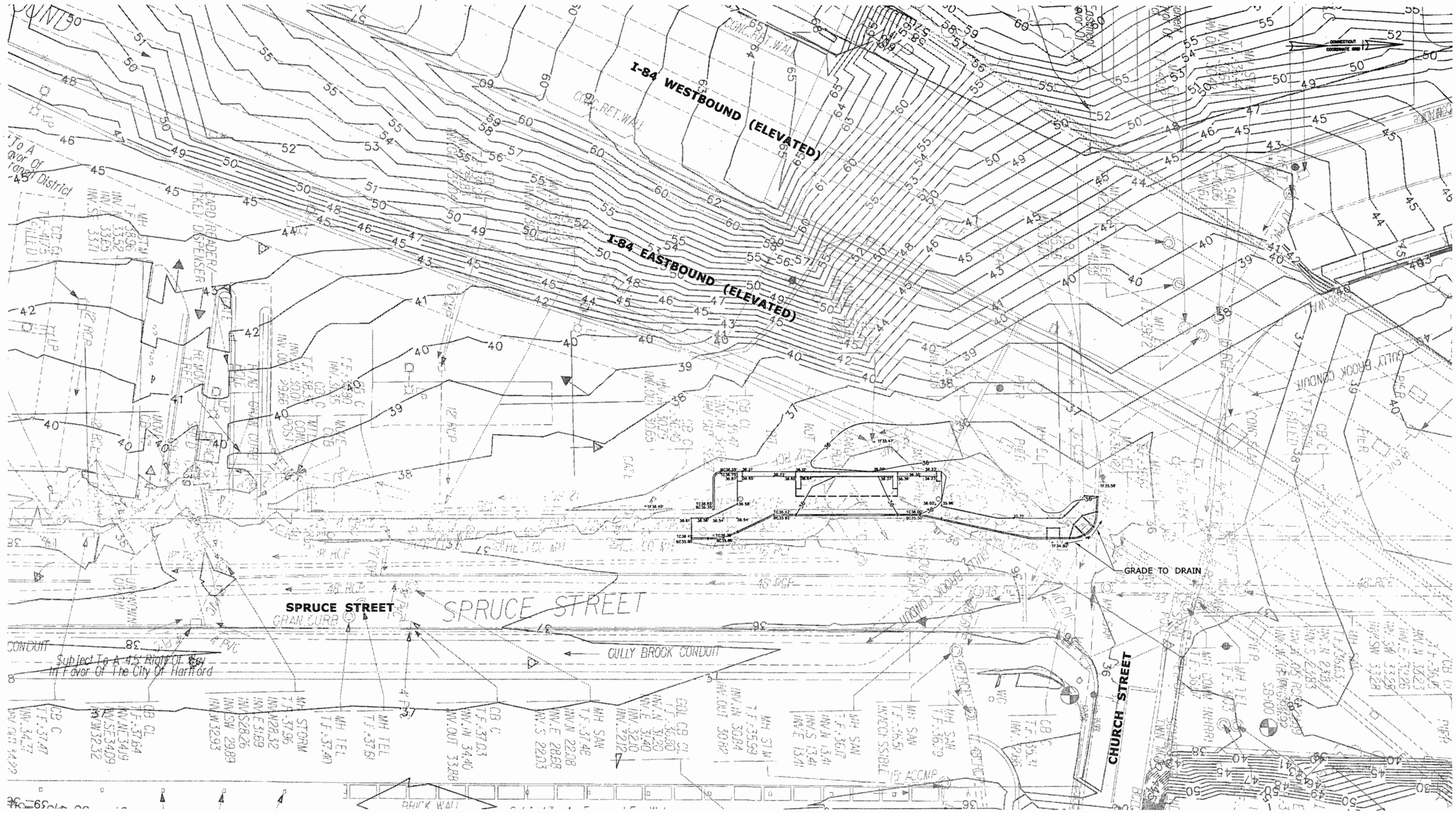

ENVIRONMENTAL PERMIT REVIEW

REV.	DATE	REVISION DESCRIPTION	SHEET NO.
-	-	-	-
-	-	-	-
-	-	-	-
-	-	-	-
-	-	-	-
1	NOV. 09	DESIGN COORDINATION REVISIONS	-

THE INFORMATION, INCLUDING ESTIMATED QUANTITIES OF WORK, SHOWN ON THESE SHEETS IS BASED ON LIMITED INVESTIGATIONS BY THE STATE AND IS IN NO WAY WARRANTED TO INDICATE THE CONDITIONS OF ACTUAL QUANTITIES OF WORK WHICH WILL BE REQUIRED.

Plotted Date: 11/11/2009

DESIGNER/DRAFTER: KRV
CHECKED BY: -
SCALE IN FEET 0 20 40
SCALE 1"=20'

STATE OF CONNECTICUT
DEPARTMENT OF TRANSPORTATION

Filename: ...\FD_MSH_GRD_88H039_UNION.dgn

SIGNATURE/ BLOCK:
OFFICE OF ENGINEERING
APPROVED BY: DATE:

PROJECT TITLE:
NEW BRITAIN - HARTFORD BUS RAPID TRANSIT SYSTEM

TOWN: HARTFORD

DRAWING TITLE:
UNION STATION GRADING PLAN

PROJECT NO. 88--H039
DRAWING NO. GRD-XX
SHEET NO. S

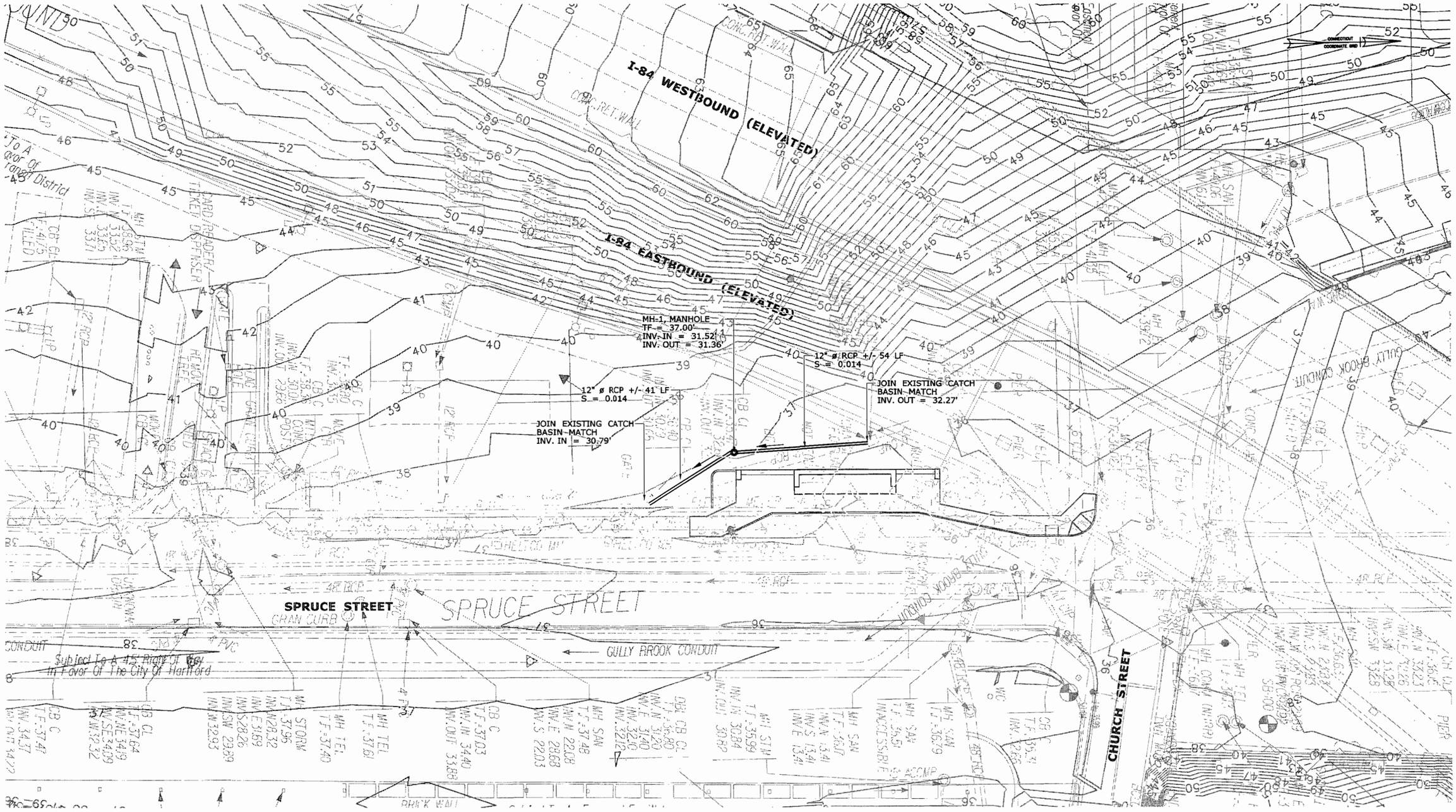

ENVIRONMENTAL PERMIT REVIEW

REV.	DATE	REVISION DESCRIPTION	SHEET NO.
-	-	-	-
-	-	-	-
-	-	-	-
-	-	-	-
-	-	-	-
1	NOV.	DESIGN COORDINATION REVISIONS	-

THE INFORMATION, INCLUDING ESTIMATED QUANTITIES OF WORK, SHOWN ON THESE SHEETS IS BASED ON LIMITED INVESTIGATIONS BY THE STATE AND IS IN NO WAY WARRANTED TO INDICATE THE CONDITIONS OF ACTUAL QUANTITIES OF WORK WHICH WILL BE REQUIRED.

Plotted Date: 11/11/2009

DESIGNER/DRAFTER: KCM
CHECKED BY: -
SCALE IN FEET 0 20 40
SCALE 1"=20'

STATE OF CONNECTICUT
DEPARTMENT OF TRANSPORTATION

Filename: ...\FD_MSH_DRG_88H039_UNION.dgn

SIGNATURE/ BLOCK:
OFFICE OF ENGINEERING
APPROVED BY: DATE:

PROJECT TITLE:
NEW BRITAIN - HARTFORD
BUS RAPID TRANSIT STATIONS

TOWN: HARTFORD

DRAWING TITLE:
UNION STATION
DRAINAGE PLAN

PROJECT NO. 88--H039
DRAWING NO. DRG-XX
SHEET NO. S

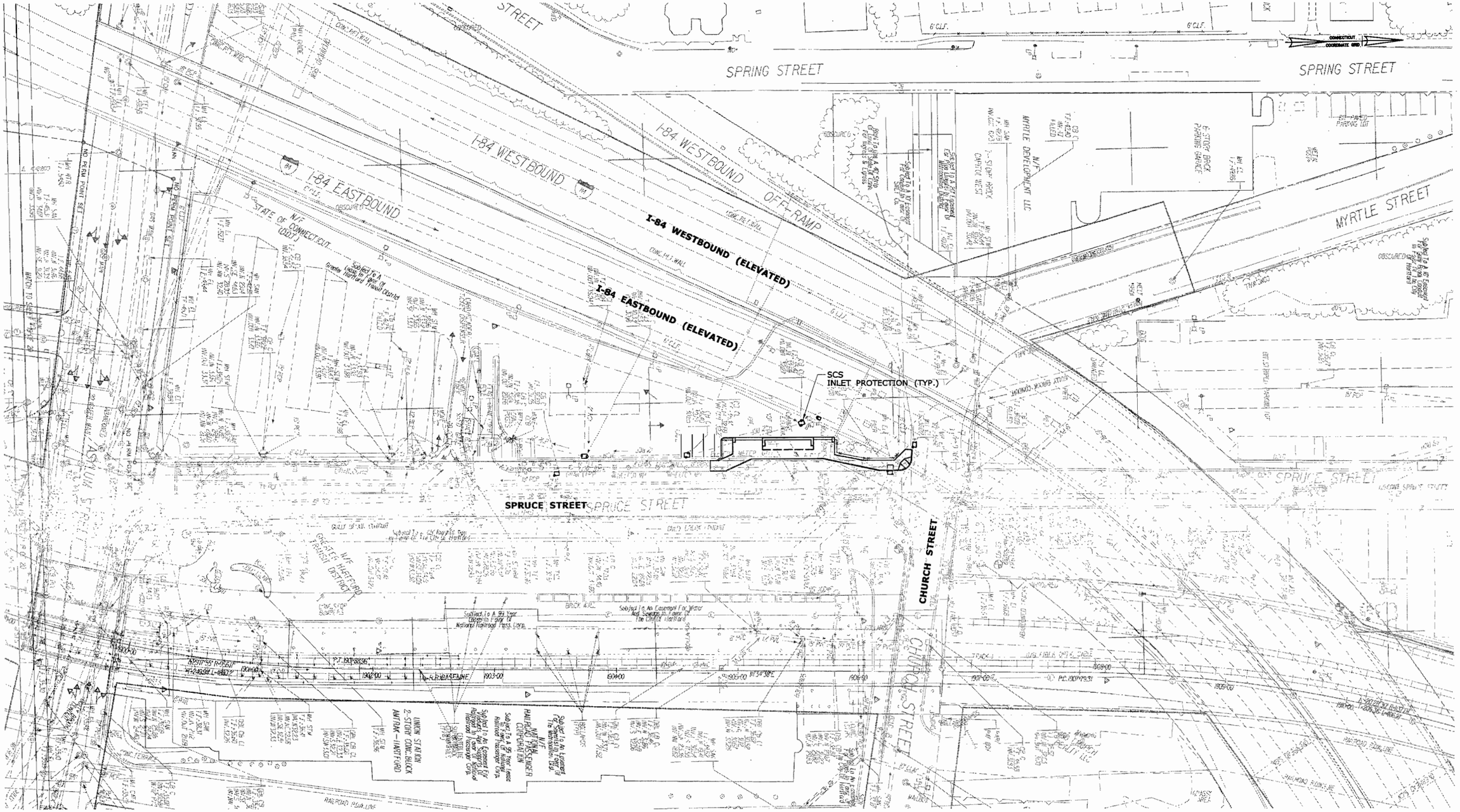

PRELIMINARY DESIGN REVIEW

REV.	DATE	REVISION DESCRIPTION	SHEET NO.
-	-	-	-
-	-	-	-
-	-	-	-
-	-	-	-
-	-	-	-
-	-	-	-

THE INFORMATION, INCLUDING ESTIMATED QUANTITIES OF WORK, SHOWN ON THESE SHEETS IS BASED ON LIMITED INVESTIGATIONS BY THE STATE AND IS IN NO WAY WARRANTED TO INDICATE THE CONDITIONS OF ACTUAL QUANTITIES OF WORK WHICH WILL BE REQUIRED.

Plotted Date: 10/22/2009

DESIGNER/DRAFTER: KRV
CHECKED BY: -
SCALE IN FEET 0 40 80
SCALE 1"=40'

STATE OF CONNECTICUT
DEPARTMENT OF TRANSPORTATION

Filename: ...\FD_MSH_SED_88H039_UNION.dgn

SIGNATURE/BLOCK: OFFICE OF ENGINEERING
APPROVED BY: DATE:

PROJECT TITLE: NEW BRITAIN - HARTFORD BUS RAPID TRANSIT STATIONS

TOWN: HARTFORD

DRAWING TITLE: UNION STATION SEDIMENTATION CONTROL

PROJECT NO. 88-H039
DRAWING NO. SED-XX
SHEET NO. S

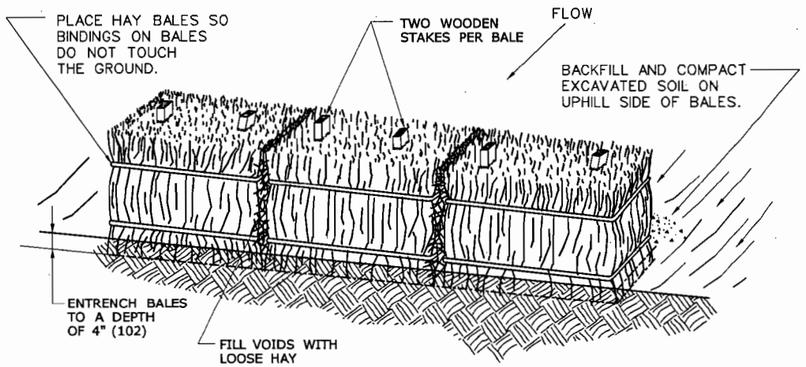

HAY BALE SYSTEM

GENERAL NOTES:

1. HAY BALES SHALL NOT BE USED IN A WATERCOURSE.
2. HAY BALES SHALL BE ENTRENCHED 4" (102) AND TIGHTLY BUTTED TOPGETHER. REMOVE HEAVY BRUSH AND FILL ALL VOIDS WITH LOOSE HAY.
3. WOOD STAKES SHALL HAVE A MINIMUM CROSS-SECTION SIZE OF AT LEAST 1" (102) x 1" (102) AND MINIMUM LENGTH OF 4 FT.(1219)
4. CLEAN OUT ACCUMULATED SEDIMENT WHEN ONE-HALF (1/2) OF THE ORIGINAL HEIGHT OF THE HAY BALE FENCE, AS INSTALLED, BECOMES FILLED WITH SEDIMENT OR AS DIRECTED BY THE ENGINEER.
5. NOT TO BE USED IN THE VICINITY OF URBAN AND RESIDENTIAL AREAS.

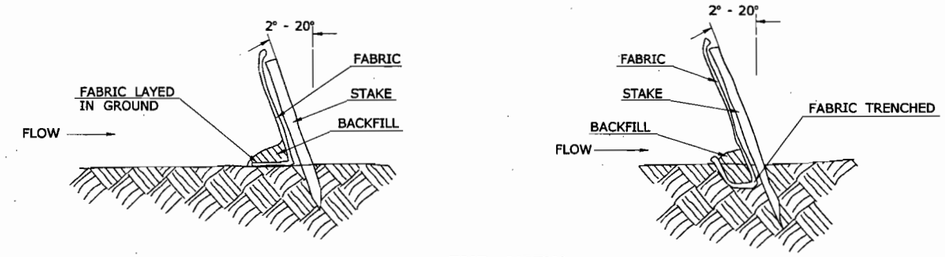

END VIEW

BACKFILLING GEOTEXTILE TOE

TRENCHING GEOTEXTILE TOE

GEOTEXTILE FENCE SYSTEM

GENERAL NOTES:

1. GEOTEXTILE FENCE SHOULD BE PLACED SO THE FENCE LEANS TOWARD THE SOURCE OF SEDIMENT.
2. MAXIMUM SPACING FOR WOODEN STAKES OR STEEL POSTS IS 10.0' (3048).
3. WOOD STAKES SHALL HAVE A MINIMUM CROSS-SECTION SIZE OF 1.5" (457) X 1.5" (457) AND MINIMUM LENGTH OF 4 FT. (1219) STEEL POSTS SHALL BE AT LEAST 0.5 LB. PER FOOT WITH A MINIMUM LENGTH OF 4 FT. (1219).
4. WOODEN STAKES OR STEEL POSTS SHALL BE DRIVEN TO A MINIMUM OF 1' (305) INTO THE GROUND.
5. 6" (152) OF GEOTEXTILE SHALL BE BURIED BY BACKFILLING OR TRENCHING AND AT LEAST 2.5' (762) IN HEIGHT OF GEOTEXTILE SHALL BE EXPOSED.
6. FABRIC SHALL BE JOINED ONLY AT A SUPPORT POST WITH A MINIMUM OF 6" (152) OVERLAP AND SECURITY SEALED.
7. UPON RE-ESTABLISHMENT OF GROUND COVER IN DISTURBED AREAS AND WHEN DIRECTED BY THE ENGINEER, OR UPON FINAL INSPECTION FENCE AND ANY SEDIMENT SHALL BE REMOVED. AT NO TIME WILL THE FENCE REMAIN IN PLACE AFTER PROJECT COMPLETION.
8. GEOTEXTILE FENCE SHALL NOT BE USED IN A WATER COARSE.
9. ONLY GEOTEXTILE FROM THE DEPARTMENTS APPROVED PRODUCT LIST SHALL BE USED.
10. BACKFILLING OF GEOTEXTILE SHALL ONLY BE USED WHEN GROUND IS FROZEN OR WHERE OTHER OBSTRUCTIONS ARE ENCOUNTERED THAT PROHIBITE TRENCHING, IE, STUMPS OR ROCKS.
11. CLEAN OUT ACCUMULATION SEDIMENT WHEN ONE-HALF (1/2) OF THE ORIGINAL HEIGHT OF THE GEOTEXTILE FENCE, AS INSTALLED , BECOMES FILLED WITH SEDIMENT OR AS DIRECTED BY THE ENGINEER.

REVISED: 9/10/09

REV.	DATE	REVISION DESCRIPTION	SHEET NO.
-	-	-	-
-	-	-	-
-	-	-	-
-	-	-	-
-	-	-	-
-	-	-	-

THE INFORMATION, INCLUDING ESTIMATED QUANTITIES OF WORK, SHOWN ON THESE SHEETS IS BASED ON LIMITED INVESTIGATIONS BY THE STATE AND IS IN NO WAY WARRANTED TO INDICATE THE CONDITIONS OF ACTUAL QUANTITIES OF WORK WHICH WILL BE REQUIRED.

Plotted Date: 10/28/2009

DESIGNER/DRAFTER: -

CHECKED BY: -

NTS

STATE OF CONNECTICUT
DEPARTMENT OF TRANSPORTATION

Filename: ...\FD_MSH_DET_88H039_SED_CONTROL1.dgn

SIGNATURE/ BLOCK:

OFFICE OF ENGINEERING

APPROVED BY: DATE:

PROJECT TITLE:

NEW BRITAIN - HARTFROD BUS RAPID TRANSIT STATIONS

TOWN:

DRAWING TITLE:

SEDIMENTATION CONTROL SYSTEM DETAILS

PROJECT NO. 88-H039

DRAWING NO. DET-XX

SHEET NO. S

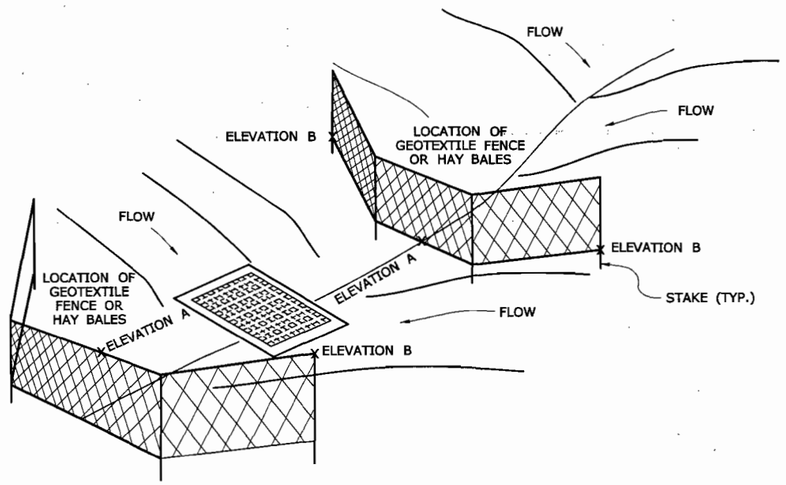

TREATMENT FOR A CATCH BASIN ON A SLOPE

(SEE NOTE 4)

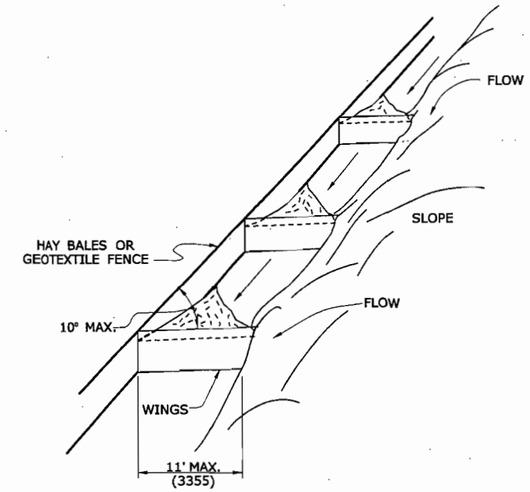

TREATMENT AT TOE OF SLOPE

(SEE NOTE 3)

GENERAL NOTES:

1. THE CONTRACTOR SHALL MAINTAIN THE EARTHEN BERM AS DIRECTED BY THE ENGINEER.
2. WHEN USING A SEDIMENTATION CONTROL SYSTEM ALONG THE TOE OF SLOPE, ADD WINGS TO PREVENT SEDIMENT FROM MOVING ALONG THE FENCE AND OFF THE SITE. MINIMUM SPACING FOR WINGS IS 25' (7620).
3. CATCH BASIN ON SLOPE SHOULD NOT BE RINGED. THE SPACING OF SEDIMENTATION CONTROL SYSTEM SHALL VARY WITH SLOPE.
4. ELEVATION B = A + 12" (305) MIN.

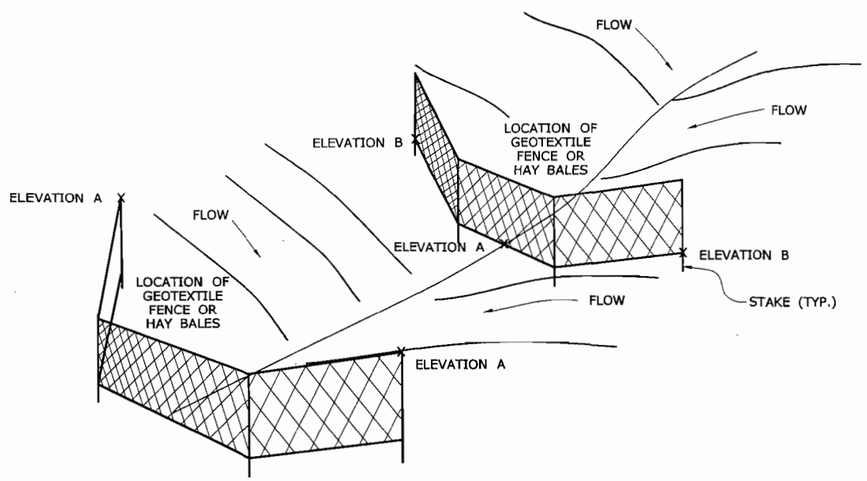

CHECK DAM

(SEE NOTE 4)

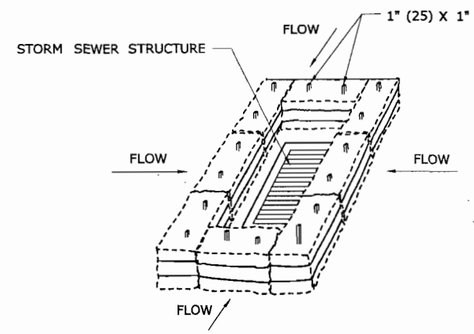

HAY BALE AT CATCH BASIN

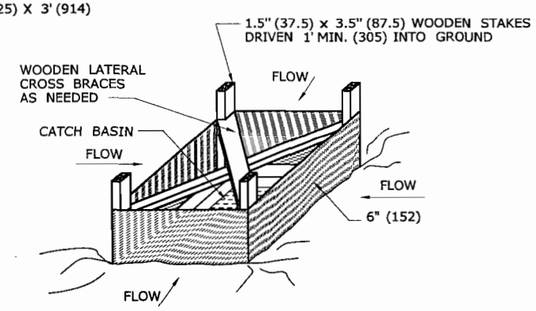

GEOTEXTILE FENCE AT CATCH BASIN

TREATMENT FOR A CATCH BASIN IN A DEPRESSION

REVISED 9/10/09

REV.	DATE	REVISION DESCRIPTION	SHEET NO.
-	-	-	-
-	-	-	-
-	-	-	-
-	-	-	-
-	-	-	-
-	-	-	-

THE INFORMATION, INCLUDING ESTIMATED QUANTITIES OF WORK, SHOWN ON THESE SHEETS IS BASED ON LIMITED INVESTIGATIONS BY THE STATE AND IS IN NO WAY WARRANTED TO INDICATE THE CONDITIONS OF ACTUAL QUANTITIES OF WORK WHICH WILL BE REQUIRED.

Plotted Date: 10/28/2009

DESIGNER/DRAFTER: -

CHECKED BY: -

NTS

STATE OF CONNECTICUT
DEPARTMENT OF TRANSPORTATION

Filename: ...\FD_MSH_DET_88H039_SED_CONTROL2.dgn

SIGNATURE/BLOCK:

OFFICE OF ENGINEERING

APPROVED BY: DATE:

PROJECT TITLE:

NEW BRITAIN - HARTFORD BUS RAPID TRANSIT STATIONS

TOWN:

DRAWING TITLE:

SEDIMENTATION CONTROL TREATMENT DETAILS

PROJECT NO. 88-H039

DRAWING NO. DET-XX

SHEET NO. S

8. Appendix E: CTDOT Preliminary Design Comment Responses

Station: Union Reviewer: Drainage Reviewed Date: 11/3/2009
Responder: Liz Dealy Date Responded: 2009-11-11

STATE OF CONNECTICUT
DEPARTMENT OF TRANSPORTATION

m e m o r a n d u m

subject: Project No. 88-H039 (171-305 P.E.)
New Britain – Hartford Busway
Union Station
Hartford
Preliminary Design Review

date: November 3, 2009

to: Mr. Richard B. Armstrong
Trans. Principal Engineer
Consultant Design
Bureau of Engineering
and Construction

from: Michael E. Masayda
Trans. Principal Engineer
Hydraulics and Drainage
Bureau of Engineering
and Construction

Michael Masayda

No.	Comment	Inc.	Not Inc.
1	The drainage report indicates that the construction of the busway platform will result in a small drainage area (approximately 0.06 acres) that will be swapped from one subarea to another and eventually will be collected at the same location approximately 400 feet downstream from the site. This assessment is not consistent with the survey information. The plan shows one 18" RCP system is for storm drainage and the other 48" RCP is for combined sewer. Verify the survey information and revise the drainage report as necessary.		
2	Determine who owns and maintains the existing storm drainage systems that the station drainage will tie into and include this information in the drainage report.		

Yolanda Antoniak/ya:sd
cc: Joseph J. Obara
Chong Lung Chow
088-H039K

Station: Union Reviewer: Drainage Reviewed Date: 11/3/2009
Responder: Liz Dealy Date Responded: 2009-11-11

Reviewer Comment 1)

1	The drainage report indicates that the construction of the busway platform will result in a small drainage area (approximately 0.06 acres) that will be swapped from one subarea to another and eventually will be collected at the same location approximately 400 feet downstream from the site. This assessment is not consistent with the survey information. The plan shows one 18" RCP system is for storm drainage and the other 48" RCP is for combined sewer. Verify the survey information and revise the drainage report as necessary.

SEA Response: ***The survey data supports that both catch basins join pipelines that become one line within Spruce Street. This is shown with drainage pipe arrows and a physical connection.***

Reviewer Comment 2)

2	Determine who owns and maintains the existing storm drainage systems that the station drainage will tie into and include this information in the drainage report.

SEA Response: ***Will comply.***

9. Appendix F: CTDEP Attachment H1 and H2

Attachment H: Engineering Documentation

Part 1: Engineering Report Checklist

The following is a checklist of requirements that need to be completed, included and submitted as part of the Engineering Report. Please complete this checklist by identifying where each requirement listed is addressed in the Engineering Report (report title and page numbers). If an item is not applicable, place "NA" in the box. Attach the completed checklist as the cover sheet to engineering reports, as applicable, which fully describe the design of the proposed facilities or other actions and the hydraulic and hydrologic effects thereof. The application instructions (DEP-IWRD-INST-100) should be consulted for a complete description of each item listed. This checklist is required to be signed and sealed by a professional engineer licensed in the State of Connecticut.

Stormwater Management

Location of Item	Item Description
2.0	Description of the design storm frequency intensity, volume and duration
5.0 Appendix B	Watershed maps, existing and proposed
N/A	Computations for Tc
3.0.1/3.0.2	Imperviousness calculations
N/A	NRCS runoff curve numbers, volumetric runoff coefficients
6.0 Appendix C	Computations used to determine peak runoff rates, and velocities for each watershed area (24-hour storm): • Stream Channel Protection: 2-year frequency ("over-control" of 2-year storm) • Conveyance Protection: 10-year frequency • Peak Runoff Attenuation: 2-year, 10-year, and 100-year frequency • Emergency Outlet Sizing: safely pass the 100-year frequency or larger storm
N/A	Hydrograph routing calculations
N/A	Description, schematics, and calculations for drainage and stormwater management systems, bridges and culverts
N/A	Infiltration rates
2.0	Documentation of sources
N/A	Computer disk containing input and output data and the associated program for all computer models used in the analyses
6.0 Appendix C	Hard copy of input and output data including input/output tables
N/A	Detention basin analysis including timing and duration of expected outflow, stream stability analysis and hydrograph summation

Flood Plain Assessment

Location of Item	Item Description
N/A	Description or simulation of existing and proposed conditions upstream and downstream of the proposed activity
N/A	(For SCEL applications only) A determination of the effect of the proposed activity on flooding and flood hazards together with an equivalent encroachment on the opposite bank for the flood event establishing the encroachment lines
N/A	For any bridge or culvert placement or replacement with a drainage area of 100 acres or more, plan sheets showing the existing and proposed inundation area for the 2, 10, 25, 50, and 100 year discharges, carried to convergence
N/A	A description and analysis of the floodplain modifications required to restore any flood conveyance and flood storage capacity
N/A	Demonstration that backwater from the proposed activity will not impact an existing dam, dike, or similar structure
N/A	Backup data and complete hydraulic analysis for proposed modifications to the floodplain including location plan and plot for sections, profile sheet, summary sheet

Dams, Dikes, Diversion Channels, Similar Structures

Location of Item	Item Description
N/A	Primary and emergency spillway and outlet structure erosion protection
N/A	Dam breach analysis
N/A	Geotechnical evaluation
N/A	Construction Specifications for foundation preparation, embankment material, outlet structure, and construction inspection

Soil Erosion and Sediment Control Plan

Location of Item	Item Description
3.0.4	Narrative
7.0 Appendix D	Drawings
7.0 Appendix D	Details
N/A	Calculations for Engineered Measures

Professional Certification

For any Engineering Report submitted as part of the IWRD permit application, the following certification must be signed and sealed by a professional engineer licensed to practice in Connecticut and submitted with the Engineering Report Checklist and Report.

"I certify that in my professional judgement, each requirement listed in the Engineering Report Checklist has been addressed in the Engineering Report submitted as part of the IWRD permit application as Attachment H, Part 1 and that the information is true, accurate and complete to the best of my knowledge and belief.

This certification is based on my review of the Engineering Report.

I understand that a false statement made in the submitted information may, pursuant to Section 22a-6 of the General Statutes, be punishable as a criminal offense under Section 53a-157b of the General Statutes, and may also be punishable under Section 22a-438 of the General Statutes."

Signature of Applicant

Date

CT Department of Transportation

Name of Applicant (print or type)

Title (if applicable)

Signature of Professional Engineer

11/9/09

Date

Al Bisacky

Name of Professional Engineer (print or type)

14856

P.E. Number (if applicable)

Affix P.E. Stamp Here
(if applicable)

STATE OF CONNECTICUT
ALBERT G. BISACKY
No.14856
LICENSED
PROFESSIONAL ENGINEER

Attachment H: Engineering Documentation

Part 2: Hydrologic and Hydraulic Consistency Worksheet

Inland Water Resources Division Permit Activities

This worksheet has four sections; only complete the section(s) applicable to the proposed project. Where a question requires a "Yes" or "No" answer, select the appropriate response and explain your response, if required, in the space provided.

Section I: **Floodplain Management** *(if the proposed project involves a structure, obstruction, encroachment or work in a watercourse, floodplain, or coastal high hazard area)*

Section II: **Stormwater Management** *(if the proposed project involves stormwater drainage or stormwater runoff)*

Sections III: **State Grants and Loans** and **Section IV: Disposal of State Land** *(only if the applicant is a state agency seeking flood management certification approval for state grants and loans or disposal of state land)*

Contents:

Section I: **Floodplain Management** ***Page No.***

1. ***General Criteria***
   a. *Critical Activity*.....3
   b. *Nonintensive Floodplain Uses*.....3
   c. *National Flood Insurance Program (NFIP)*.....3
   d. *Municipal Regulations*.....3

2. ***Flooding and Flood Hazards***
   a. *Flooding*.....4
   b. *Flood Velocities*.....4
   c. *Flood Storage*.....4
   d. *Degrading or Aggrading Stream Beds*.....4
   e. *Ice Jams*.....4
   f. *Storage of Materials & Equipment*.....5
   g. *Floodwater Loads*.....5

3. ***Standards for Structures in Floodplains or Coastal High Hazard Areas***
   a. *Structures in Coastal High Hazard Areas*.....5
   b. *Structures in Floodplain Areas*.....6
   c. *Residential Structures*.....6
   d. *Non-residential Structures*.....6
   e. *Utilities*.....6
   f. *Water Supply Systems*.....6
   g. *Sanitary Sewage Systems*.....6
   h. *Foundation Drains*.....6

4. ***Topography Changes within Floodplains*** ***Page No.***
   a. *No Regulatory Floodway* 7
   b. *Floodway Encroachments* 7
   c. *Coastal Areas* 7

5. ***Alterations of Watercourses***
   a. *Topography Change* 7
   b. *Hydraulic Capacity* 7
   c. *Aquatic Habitat* 8

6. ***Culverts and Bridges***
   a. *Fish Passage* 9
   b. *Depressed Structural Floors* 9
   c. *Multiple Openings* 9
   d. *Sag Vertical Curves* 9
   e. *Debris Blockage* 9
   f. *Topography Change* 9
   g. *State Highways* 10
   h. *Local Roads & Driveways* 11
   i. *Downstream Peak Flows* 12

7. ***Temporary Hydraulic Facilities*** 12

Section II: Stormwater Management

1. ***Stormwater Runoff*** 13

2. ***Stormwater Detention Facilities*** 14

3. ***Storm Drainage Systems***
   a. *DOT Standards* 15
   b. *Design Storm* 15
   c. *Future Development* 15
   d. *Outlet Protection* 16
   e. *Overland Flow* 16
   f. *Vegetated Filter Strips* 16
   g. *Stormwater Treatment* 16
   h. *E & S Control Plan* 16

Section III: State Grants and Loans 17

Section IV: Disposal of State Land 18

Definitions of terms used in these worksheets are found in Section 25-68b of the Connecticut General Statutes and Section 25-68h-1 of the Regulations of Connecticut State Agencies and in the National Flood Insurance Program Regulations (44 CFR, Chapter 1, Subchapter B, Part 59.1).

Section I: Floodplain Management

Section I: Floodplain Management

Name of Applicant: **Connecticut Department of Transportation**

Name of Proposed Project: **New Britain-Hartford Busway, Proj. No. 171-305 (88-H039)**

1. *General Criteria*

a. *Critical Activity* - Does the proposed project involve the treatment, storage and disposal of hazardous waste or the siting of hospitals, housing for the elderly, schools or residences, in the 0.2 per cent [500 year] floodplain? ☐ Yes ☒ No

If yes, the base flood for the critical activity shall have a recurrence interval equal to the 500 year flood event; if no, the base flood for the activity shall have a recurrence interval equal to the 100 year flood event.

b. *Nonintensive Floodplain Uses* - Will the proposed project promote development in floodplains or will utilities servicing the project be located so as to enable floodplain development?

☐ Yes ☒ No

Explain:

c. *National Flood Insurance Program* (NFIP) - Will the proposed project be located within an area of special flood hazard designated by the Federal Emergency Management Agency (FEMA)?

☐ Yes ☒ No If yes, list the FEMA flood zone(s):

Does the proposed project meet the NFIP minimum standards established in 44 CFR, Chapter 1, Subchapter B, Part 60.3, floodplain management criteria for flood-prone areas?

☐ Yes ☐ No

d. *Municipal Regulations* - Has the municipality in which the proposed project is to be located adopted floodplain regulations containing requirements that are more restrictive than the NFIP floodplain management criteria for flood-prone areas? ☐ Yes ☒ No

If yes, describe the more restrictive requirements:

Does the proposed project comply with the more restrictive standards of the municipality?

☐ Yes ☐ No

Section I: Floodplain Management (continued)

2. *Flooding and Flood Hazards*

a. *Flooding* - Will the proposed project pose any hazard to human life, health or property in the event of a base flood? ☐ Yes ☒ No

If yes, explain:

b. *Flood Velocities* - Will the proposed project cause an increase in flow velocity or depth during the base flood discharge? ☐ Yes ☒ No

If yes, the increase in velocity is: fps
and/or the increase in depth is: ft.

Will such increase in velocity or depth cause channel erosion or pose any hazard to human life, health or property? ☐ Yes ☐ No

Explain:

c. *Flood Storage* - Will the proposed project affect the flood storage capacity or flood control value of the floodplain? ☐ Yes ☒ No

If yes, describe the effects:

d. *Degrading or Aggrading Stream Beds* - Is the streambed currently degrading or aggrading?

☐ Degrading ☐ Aggrading ☒ Neither

Has the project design addressed degrading or aggrading streambed conditions?

☐ Yes ☐ No

e. *Ice Jams* - Is the watercourse prone to ice jams or floods due to ice? ☐ Yes ☒ No

Has the project design considered ice jams or floods due to ice? ☐ Yes ☒ No

Section I: Floodplain Management (continued)

f. *Storage of Materials & Equipment* - Will the construction or use of the proposed project involve the storage of materials below the 500 year flood elevation that are buoyant, hazardous, flammable, explosive, soluble, expansive or radioactive, or the storage of any other materials which could be injurious to human, animal or plant life in the event of a flood?

☐ Yes ☒ No

If yes, describe the materials and how such materials will be protected from flood damage, secured or removed from the floodplain to prevent pollution and hazards to life and property.

Storage of materials that could be injurious to human health or the environment in the event of flooding is prohibited below the elevation of the 500 year flood. Other material or equipment may be stored below the 500 year flood elevation provided that such material or equipment is not subject to major damage by floods, and provided that such material or equipment is firmly anchored, restrained or enclosed to prevent it from floating away or that such material or equipment can be removed prior to flooding.

g. *Floodwater Loads* - Will structures, facilities and stored materials be anchored or otherwise designed to prevent floatation, collapse, or lateral movement resulting from hydrodynamic and hydrostatic loads, including the effects of buoyancy? ☐ Yes ☒ No

3. *Standards for Structures in Floodplains or Coastal High Hazard Areas*

Does the proposed project involve a new or substantially improved structure or facility located within a floodplain or coastal high hazard area? ☐ Yes ☒ No

If yes, complete this subsection; if no, skip to subsection 4 (***Topography Changes within Floodplain***).

a. *Structures in Coastal High Hazard Areas* - Will the structure or facility be located within an NFIP coastal high hazard area? ☐ Yes ☐ No

If no, skip to paragraph 3(b); if yes:

1. Will the structure or facility be located landward of the reach of mean high tide?

   ☐ Yes ☐ No

2. Will a new structure or facility be located on an undeveloped coastal barrier beach designated by FEMA? ☐ Yes ☐ No

3. If the structure or facility is/will be located within a coastal high hazard area, the structure or facility must be elevated on pilings or columns so that the bottom of the lowest horizontal structural member of the lowest floor (excluding the pilings or columns) is elevated to at least one foot above the base flood level and the pile or column foundation and structure attached thereto must be anchored to resist floatation, collapse and lateral movement due to the effects of wind, velocity waters, hurricane wave wash, and base flood water loads acting simultaneously on all building components.

   Does the proposed structure or facility meet these standards? ☐ Yes ☐ No

   The base flood elevation is: ft. (Datum:)

   The elevation of the lowest horizontal structural member is: ft. (Datum:)

Section I: Floodplain Management (continued)

4. Will the space below the lowest floor be either free of obstruction or constructed with non-supporting breakaway walls? ☐ Yes ☐ No

5. Will fill be used for structural support of any buildings within coastal high hazard areas?

   ☐ Yes ☐ No

b. *Structures in Floodplain Areas* - Are the structures residential or nonresidential?

☐ Residential ☐ Nonresidential If *nonresidential*, skip to paragraph 3(d) below.

c. *Residential Structures* - If the structure or facility is for human habitation will the lowest floor of such structure or facility, including its basement, be elevated one foot above the level of the 500 year flood?

☐ Yes ☐ No

The 500 year flood elevation is: ft. (Datum:)

The elevation of the lowest floor, including basement, is: ft. (Datum:)

d. *Non-residential Structures* - If the structure or facility is not intended for residential uses, will the lowest floor of such structure or facility, including its basement, be elevated to or above the 100 year flood height or be floodproofed to that height, or in the case of a critical activity, the 500 year flood height?

☐ Yes ☐ No

If yes, the structure will be: ☐ Elevated ☐ Floodproofed

The base flood elevation is: ft. (Datum:)

The elevation of the lowest floor, including basement, is: ft. (Datum:)

The structure is floodproofed to: ft. (Datum:)

Note: for insurance purposes nonresidential structures must be floodproofed to at least one foot above the base flood elevation. DEP strongly encourages that the height of floodproofing incorporate one foot of freeboard.

e. *Utilities* - Will service facilities such as electrical, heating, ventilation, plumbing, and air conditioning equipment be constructed at or above the elevation of the base flood or floodproofed with a passive system? ☐ Yes ☐ No

f. *Water Supply Systems* - Does the proposed project include a new or replacement water supply system? ☐ Yes ☐ No

If yes, is the water supply system designed to prevent floodwaters from entering and contaminating the system during the base flood? ☐ Yes ☐ No

g. *Sanitary Sewage Systems* - Does the proposed project include a new or replacement sanitary sewage or collection system? ☐ Yes ☐ No

If yes, is the sanitary sewage system designed to minimize or eliminate the infiltration of flood waters into the systems and discharges from the systems into flood waters during the base flood?

☐ Yes ☐ No

h. *Foundation Drains* - Are foundation drains of buildings designed to prevent backflow from the 100 year frequency flood into the building?

☐ Yes ☐ No ☐ No foundation drains

Section I: Floodplain Management (continued)

4. *Activity within Floodplain*

Does the proposed project involve activity in a floodplain including but not limited to filling, dumping, construction, excavating, or grading?

☐ Yes ☒ No If no, skip to subsection 5 ***(Alterations of Watercourses)***.

If yes, does the proposed project include encroachments, including fill, new construction, substantial improvements, or other development within a NFIP adopted regulatory floodway?

☐ Yes ☐ No If yes, skip to paragraph 4(b) below.

a. *No Regulatory Floodway* - The NFIP requires that until a regulatory floodway is designated, that no new construction, substantial improvements, or other development (including fill) shall be permitted within Zones A1-30 and AE unless it is demonstrated that the cumulative effect of the proposed development, when combined with all other existing and anticipated development, will not increase the water surface elevation of the base flood more than one foot at any point. (If no regulatory floodway has been adopted, project impacts may be evaluated by considering an equivalent conveyance loss on the opposite side of the river from the proposed project.)

   Is the proposed project consistent with this requirement? ☐ Yes ☐ No

b. *Floodway Encroachments* - Will the proposed encroachment into the floodway result in any increase in flood levels during either the 100 year or 10 year discharges?

   100 year: ☐ Yes; the increase is: (in 1/100ths of a foot) ☐ No

   If yes, has the applicant received approval of such increase in accordance with 44 CFR, Chapter 1, Subchapter B, Part 65.12? ☐ Yes ☐ No

   10 year: ☐ Yes; the increase is: (in 1/100ths of a foot) ☐ No

c. *Coastal Areas* - Flood hazard potential in coastal areas shall be evaluated considering surface profiles of the combined occurrence of tides, storm surges, and peak runoff. The starting water surface elevation for the base flood in watersheds with time of concentrations of over 6 hours shall be the 10 year frequency tidal surge level.

   If the proposed project is in a coastal area, have the hydraulic analyses incorporated these criteria?

   ☐ Yes ☐ No ☐ Not in Coastal Area

5. *Alterations of Watercourses*

Does the proposed project include the construction or alteration to a natural perennial watercourse or man-made channel?

☐ Yes ☒ No If no, skip to subsection 6 ***(Culverts and Bridges)***; if yes, complete the following subsection:

a. *Topography Change* - Is the watercourse or channel located within a regulatory floodway or Zone A1-30 or AE as designated by the NFIP? ☐ Yes ☐ No

b. *Hydraulic Capacity* - Does the channel have a minimum flow capacity of a flood equal to at least the 25 year frequency flood? ☐ Yes ☐ No

   The channel capacity is designed for the: year flood.

   Does the channel have an inner channel with a capacity of a 2 year frequency flood? ☐ Yes ☐ No

Section I: Floodplain Management (continued)

c. *Aquatic Habitat* - Channel alterations should be designed to create aquatic habitats suitable for fisheries, including suitable habitat for maintaining fish populations and to enable fish passage, and to maintain or improve water quality, aesthetics, and recreation.

Has the applicant had any pre-application meetings or correspondence with DEP Fisheries?

☐ Yes ☐ No

Check each of the following criteria that have been incorporated into the project design:

☐ 1. artificial channel linings have been avoided;

☐ 2. the channel will encourage ecological productivity and diversity;

☐ 3. the channel and its banks will be compatible with their surroundings;

☐ 4. the channel will vary in its width, depth, invert elevations, and side slopes to provide diverse aquatic habitat;

☐ 5. straightening existing channels and thereby decreasing their length has been avoided;

☐ 6. the channel will not create barriers to upstream and downstream fish passage;

☐ 7. the channel will contain pools and riffles and a low flow channel to concentrate seasonal low water flows;

☐ 8. the channel will contain flow deflectors, boulders and low check dams to enhance aquatic habitat;

☐ 9. stream bank vegetation will be preserved where feasible and disturbed stream bank areas will be replanted with suitable vegetation;

☐ 10. clean natural stream bed materials of a suitable size will be incorporated in the new channel; and

☐ 11. construction of the proposed project will be scheduled to minimize conflicts with spawning, stocking, and recreational fishing seasons.

Describe how the above aquatic habitat design criteria have been incorporated into the project design:

Section I: Floodplain Management (continued)

6. *Culverts and Bridges*

Does the proposed project involve the repair or new construction of a culvert or bridge?

☐ Yes ☒ No If no, go to subsection 7 ***(Temporary Hydraulic Facilities)***.

If yes, complete this subsection:

a. *Fish Passage* - Does the culvert design allow for the passage of fish? ☐ Yes ☐ No

If yes, describe the specific design provisions for fish passage:

b. *Depressed Structural Floors* - Is the rigid structural floor of the culvert or bridge depressed below the normal stream bed to allow a natural stream bed to form over the floor?

☐ Yes ☐ No ☐ No rigid structural floor

c. *Multiple Openings* - The use of a single large culvert or bridge opening is preferred over the use of multiple small openings. Has the design minimized the use of multiple small openings?

☐ Yes ☐ No

If no, explain:

d. *Sag Vertical Curves* - Does the design utilize solid parapet walls in the sag part of a vertical curve?

☐ Yes ☐ No ☐ Not located in a sag vertical curve

e. *Debris Blockage* - Is the culvert or bridge prone to blockage by debris? ☐ Yes ☐ No

If yes, has the project design incorporated measures to minimize the potential for debris blockage?

☐ Yes ☐ No

f. *Topography Change* - Is the culvert or bridge located within a regulatory floodway or Zone A1-30 or AE as designated by the NFIP? ☐ Yes ☐ No

Section I: Floodplain Management (continued)

g. *State Highways* - Does the watercourse pass under a state roadway?

☐ Yes ☒ No If no, skip to paragraph 6(g)(2).

If yes, culverts and bridges for state highways shall be designed in accordance with the Connecticut Department of Transportation (DOT) Drainage Manual and all applicants should refer to it for specific design criteria. In general, however, the Drainage Manual requires the following:

(Place a check mark for all applicable criteria utilized)

☐ *Minor Structures* - Minor structures have a drainage area of less than one square mile in which there is no established watercourse. They shall be designed to pass the 25 year frequency discharge.

☐ *Small Structures* - Small structures have a drainage area of less than one square mile in which there is an established watercourse. *They* shall be designed to pass the 50 year frequency discharge.

☐ *Intermediate Structures* - Intermediate structures have a drainage area greater than one square mile and less than 10 square miles. They *shall* be designed to pass the 100 year frequency discharge with reasonable underclearance.

☐ *Large Structures* - Large structures have a drainage area greater than 10 square miles and less than 1000 square miles. They shall be designed to pass the 100 year frequency discharge with an underclearance not less than two feet.

☐ *Monumental Structures* - Monumental structures *have* a drainage area greater than 1000 square miles. They shall be designed to meet the requirements of the Connecticut Department of Environmental Protection, U.S. Army Corps of Engineers, and the U.S. Coast Guard.

☐ *Tidal Structures* - Tidal structures are subject to tidal action and shall be classified as minor, small, intermediate, etc. depending on their drainage area. These structures shall be designed in accordance with the previously listed *classifications*. However if the highway is subject to frequent tidal flooding, the design storm may be made consistent with the frequency of flooding by tidal action. The proposed culvert or bridge is classified as:

☐ Tidal, minor

☐ Tidal, small

☐ Tidal, intermediate

☐ Tidal, large

☐ Tidal, monumental

1. Has the structure been designed in accordance with the criteria established in the DOT Drainage Manual? ☐ Yes ☐ No

   If no, describe the lower design standards and the reasons for not complying with the DOT Drainage Manual:

Section I: Floodplain Management (continued)

2. Will the proposed culvert or bridge increase upstream water surface elevations in the event of a base flood above that which would have been obtained in the natural channel if the highway embankment were not constructed? ☐ Yes ☐ No

   If yes, is the increase in elevation more than one foot? Describe:

3. Will the proposed culvert or bridge be designed so that flooding during the design discharge does not endanger the roadway or cause damage to upstream developed property? (NOTE: The design discharge for culverts and bridges on state highways should be that which was determined by FEMA. If the applicant judges that the FEMA discharge is inappropriate, the project should be analyzed for both the applicant's computed flow and the FEMA discharge. The project, however, must still meet the standards of the NFIP.) ☐ Yes ☐ No

   Explain:

h. *Local Roads & Driveways* - Local roads (not state highways) and driveways may be designed for flood frequencies and underclearances less stringent than those specified in the DOT Drainage Manual when (check all that have been incorporated into the project design):

☐ 1. the road is at or close to the floodplain grade

☐ 2. water surface elevations are not increased by more than one foot nor cause damage to upstream properties

☐ 3. provisions are made to barricade the road when overtopped

☐ 4. the road or driveway is posted as being subject to flooding

☐ 5. the road or driveway has low traffic volume

☐ 6. alternate routes are available

The culvert or bridge has been designed to pass the: year frequency discharge with an underclearance of: feet.

Utilizing the DOT Drainage Manual classifications listed under paragraph 6(g) above, the culvert or bridge is classified as a: structure.

Section I: Floodplain Management (continued)

h. If the culvert or bridge is designed to standards lower than which is stipulated in the DOT Drainage Manual, list such standards and the reasons for the lower design standards:

i. *Downstream Peak Flows* - Will the proposed culvert or bridge increase downstream peak flows by decreasing existing headwater depths during flooding events? ☐ Yes ☐ No

If yes, describe the selected design criteria and the impacts to downstream properties:

7. *Temporary Hydraulic Facilities*

Temporary hydraulic facilities include all channels, culverts or bridges which are required for haul roads, channel relocations, culvert installations, bridge construction, temporary roads, or detours. They are to be designed with the same care which is used for the primary facility.

If the proposed activity involves a temporary hydraulic facility(s), has such facility been designed in accordance with Chapter 6, Appendix F, "Temporary Hydraulic Facilities," of the DOT Drainage Manual?

☐ Yes ☐ No ☒ No temporary hydraulic facilities

If yes, the design flood frequency is the: year flood.

Describe the temporary facilities:

Section II: Stormwater Management

Name of Applicant: **Connecticut Department of Transportation**

Name of Proposed Project: **New Britain-Hartford Busway, Proj. No. 171-305 (88-H039)**

1. *Stormwater Runoff*

The proposed project will (check all that apply):

- ☐ Increase the area of impervious surfaces
- ☐ Increase runoff coefficients
- ☐ Alter existing drainage patterns
- ☐ Alter time of concentrations
- ☐ Change the timing of runoff in relation to adjacent watersheds

Will the proposed project impact downstream areas by increasing peak flow rates, the timing of runoff, or the volume of runoff? ☐ Yes ☒ No

If yes, describe the downstream impacts for the 2, 10 and 100 year frequency discharges:

The pre and post development peak flow rates at the downstream design point are as follows:

Return Frequency (Year)	Peak Discharges (CFS)	
	Pre-Development	Post-Development
2		
10		
100		

The above peak discharges were computed utilizing the: hour duration storm. This duration storm was selected because:

Section II: Stormwater Management (continued)

Describe the location of the design point and why this location was chosen:

2. *Stormwater Detention Facilities*

Does the proposed project include the construction of any stormwater detention facilities?

☐ Yes ☒ No If no, skip to subsection 3 ***(Storm Drainage Systems)***.

If yes, has the DEP determined whether a dam construction permit is required? ☐ Yes ☐ No

The pre and post development peak flow rates at the downstream design point are as follows:

Return Frequency (Year)	Peak Discharges (CFS)		
	Pre-Development	Post-Development (without detention)	Post-Development (with detention)
2			
10			
100			

The above peak discharges were computed utilizing the: hour duration storm. This duration storm was selected because:

Describe the location of the design point and why this location was chosen:

Section II: Stormwater Management (continued)

If the proposed project increases peak flow rates for the 2, 10 or 100 year frequency discharges, describe the impacts to downstream areas:

Will the detention facility aggravate erosion along the downstream channel? ☐ Yes ☐ No

In certain situations, detention of stormwater aggravates downstream flooding. This occurs when the discharge from a subwatershed is delayed by a detention facility so that it adds to the peak discharge from another subwatershed. Adding the hydrographs of the two subwatersheds results in a higher peak discharge over that which would occur if detention were not present.

Is the location of the detention facility within the watershed suitable for detention? ☐ Yes ☐ No

Explain:

3. *Storm Drainage Systems*

Does the proposed project include the construction of subsurface storm drainage systems?

☒ Yes ☐ No If no, you have completed Section II of the worksheets.

If yes, complete this subsection:

a. *DOT Standards* - Is the proposed storm drainage system designed in accordance with the Connecticut Department of Transportation's (DOT) Drainage Manual? ☐ Yes ☒ No

If no, describe the lower design standards and the reasons for not complying with the Drainage Manual:

The proposed design is for the relocation of an existing 12" RCP. Modifications to the hydraulic conditions of the system are not proposed.

b. *Design Storm* - Is the storm drainage system designed for a ten year frequency storm without closing the use of the facility? ☐ Yes ☐ No

c. *Future Development* - Has the design of the system considered future development of adjacent properties? ☐ Yes ☐ No

Section II: Stormwater Management (continued)

d. *Outlet Protection* - Have the outlets from the system been designed to minimize the potential for downstream erosion? ☐ Yes ☐ No

e. *Overland Flow* - Has the use of curbing been minimized to encourage overland dispersed flow through stable vegetated areas? ☐ Yes ☐ No

f. *Vegetated Filter Strips* - Has the design incorporated the use of vegetated filter strips or grass swales to improve the quality of water outletting from the storm drainage system? ☐ Yes ☐ No

g. *Stormwater Treatment* - Describe features of the stormwater collection system intended to improve the quality of stormwater runoff prior to its discharge to surface waters.

h. *E & S Control Plan* - Has the design and installation of the storm drainage system been coordinated with the soil erosion and sediment control plan prepared in accordance with the 2002 Connecticut Guidelines for Soil Erosion and Sediment Control? ☒ Yes ☐ No

Explain:

Section III: State Grants and Loans

Name of Applicant:

Name of Proposed Project:

1. This Flood Management Certification concerns a: ☐ grant ☐ loan

2. Total amount of grant or loan: $

3. The recipient of the grant or loan will be:

   Name:

   Mailing Address:

   City/Town: State: Zip Code:

   Phone: ext. Fax:

   Recipient Contact person:

   Name:

   Mailing Address:

   City/Town: State: Zip Code:

   Phone: ext. Fax:

4. The recipient will use the grant or loan to (check all that apply):

   ☐ construct a structure, obstruction or encroachment or conduct other work within a floodplain or coastal high hazard area.

   ☐ construct a facility or develop a site affecting drainage and stormwater runoff.

   ☐ conduct a study or prepare a report concerning land use or land use planning affecting a floodplain, drainage or stormwater runoff.

5. If the grant or loan is for a study or report, describe the anticipated effects on floodplains, drainage or stormwater runoff if the recommendations are implemented:

6. Will the proposed project promote development in floodplains or will utilities servicing the project be located so as to enable floodplain development? ☐ Yes ☐ No

   Explain:

If the grant or loan is for construction of a structure, obstruction or encroachment or other work within a floodplain, or if it is for construction of a facility or development of a site that will affect drainage and stormwater runoff, Sections I and/or II of this Worksheet must be completed and the engineering report (Attachment H) and plans (Attachment G) must be provided as part of this application.

Section IV: Disposal of State Land

Name of Applicant:

Name of Proposed Project:

1. The grantee will be:

   Name:

   Mailing Address:

   City/Town: State: Zip Code:

   Phone: ext. Fax:

   Contact Person: Phone:

2. Describe the current state of development and use of the land to be disposed.

3. Why is the agency disposing of the land?

4. Describe the grantee's intended use of the land.

5. Will the disposal of the land promote development in floodplains? ☐ Yes ☐ No

   Explain:

6. Will the grantee's use of the land be consistent with the state's flood management statutes and regulations?

   ☐ Yes ☐ No Explain: