New Britain – Hartford Busway

State Project No. 88-H035

Drainage Design Report

July 27, 2010

Prepared by:
URS Corporation, AES
500 Enterprise Drive
Rocky Hill, Connecticut

for:
Connecticut Department of Transportation

URS Project No. 36937231

Contents

I. Introduction 1

1. Purpose of Report 1

2. Project Description 1

II.Existing Drainage Systems 1

III.Proposed Drainage Systems 3

1. Roadway Drainage Systems 4

2. Bridge Deck Drainage System 7

IV.Calculations 8

1. Roadway Drainage Design 8

2. Bridge Deck Drainage Design 9

3. Water Quality Basin Design 9

4. Channel & Ditch Design 10

V. APPENDICES ..... A

Appendix A ..... A

Drainage System One & Two – Sta.19+00 to Sta.29+00 ..... A

Appendix B ..... B

Drainage System Three – Sta.36+00 to Sta.104+00 ..... B

Appendix C C

Drainage System Four – Sta.110+00 to Sta.118+00 C

Appendix D ..... D

Drainage System Five – Route 72 Exit Ramp & Route 9 SB Entrance Ramp ..... D

Appendix E ..... E

Drainage System Six – Cemetery Area ..... E

Appendix F ..... F

Drainage System Seven – East Main Street ..... F

Appendix G ..... G

Drainage System Eight – Florence Street ..... G

Appendix H ..... H

Bridge Deck Drainage Design ..... H

Appendix I I
Water Quality Basin (WQB) Design I
Appendix J ..... J
Channel & Ditch Design ..... J
Appendix K ..... K
Outlet Protection Design ..... K
Appendix L L
Comparison of the Existing Condition and the Proposed Condition L
Appendix M ..... M
References ..... M
Appendix N ..... N
Outlet Inspection ..... N
Appendix O ..... O
Flood Insurance Rate Map ..... O
Appendix P ..... P
Drainage Overview Map ..... P

I. Introduction

1. Purpose of Report

The purpose of this report is to present the drainage design for the New Britain portion of the Busway. Any proposed system originally designed to discharge to City systems in the Preliminary Design (Prepared by Baker Engineering, 2007) has been revised to remain within the Busway right of way and to discharge to State owned systems, except at the beginning portion of the project.

2. Project Description

This project involves the design of an exclusive bus rapid transit (BRT) facility within an abandoned railroad corridor in the City of New Britain, from the proposed Downtown Bus Station to a point 900 feet north of the proposed East Street overpass. It is the first of five projects for the proposed Busway from the Downtown, New Britain Station to Union Station in the City of Hartford. The approximate length of the portion of the Busway addressed in this report is 10,000 feet.

This project includes three new bridges. The first bridge will carry the Busway over Route 9. The second bridge will carry the Busway over the Fairview Cemetery Service Road and the third bridge will carry the Busway over Allen Street and East Street.

II.Existing Drainage Systems

There are five existing drainage trunklines adjacent to the New Britain portion of the Busway. Runoff from storm events in the project area is discharged into one of the five storm water trunk lines. The trunk lines are: the Piper Brook Trunk line, the Fairview Cemetery Trunk Line, East Street Trunk Line, Route 72/Route 9 North Trunk Line and Route 9 South Trunk Line. An overview for these existing drainage systems is shown in Figure 1. The relevant information of the five drainage systems is listed in the Table 1.

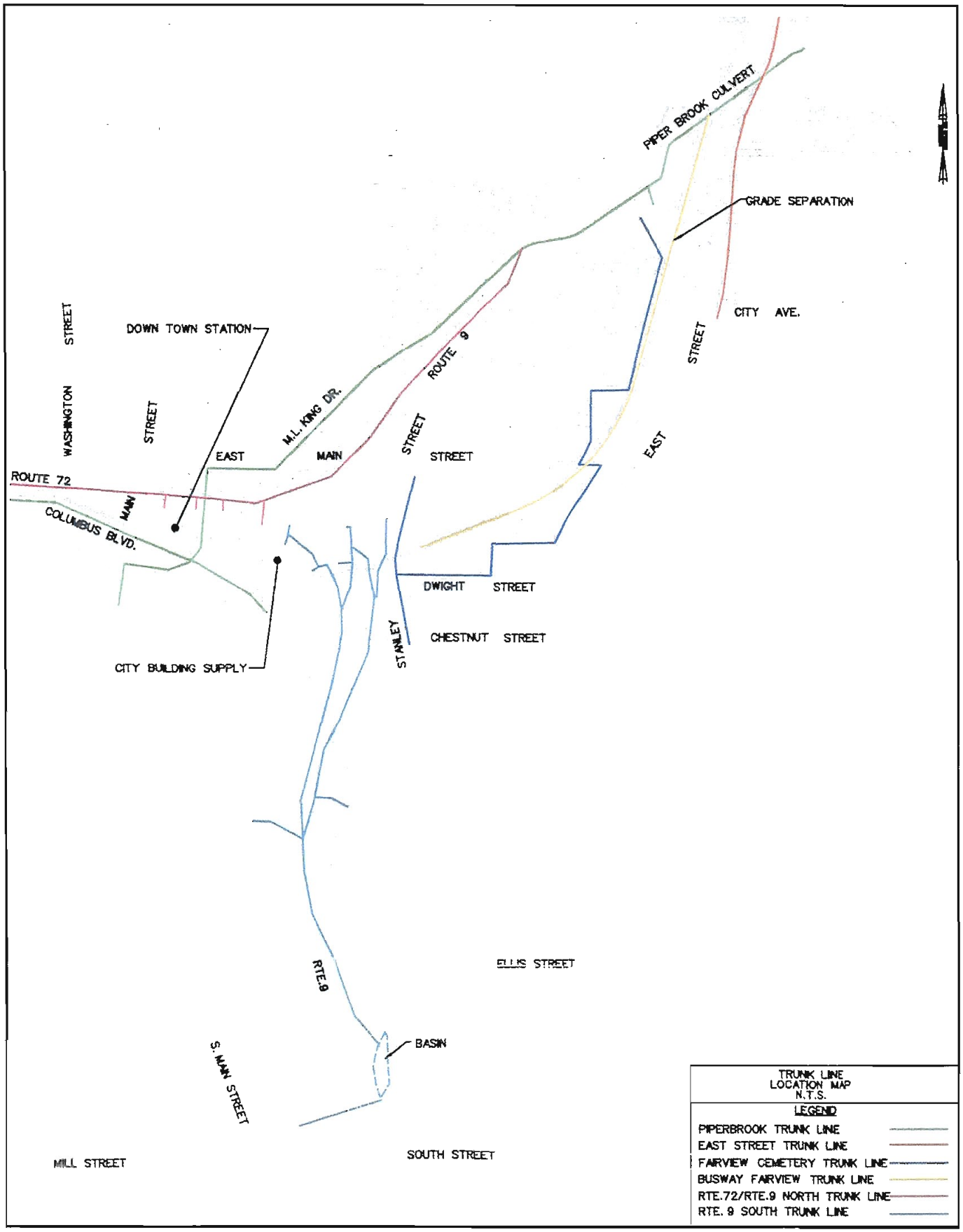

Figure 1 - Trunk line Location Map (Existing)

Table 1 Existing Drainage Systems

System Name	Owner	Serve Area	Outlet
Piper Brook Trunk Line	City/ConnDOT	Urban areas within City of New Britain	Piper Brook
East Street Trunk Line	City	Urban areas within City of New Britain	Piper Brook
Fairview Cemetery Trunk Line	City	Urban areas within City of New Britain	Piper Brook
Rte 72/Rte 9 North Trunk Line	ConnDOT	Route 72 and Route 9	Piper Brook
Rte 9 South Trunk Line	ConnDOT	Route 9	Retention Basin north of South Street

There is no evidence of storm water pretreatment systems in place at the existing drainage system.

III.Proposed Drainage Systems

Existing storm drainage trunk lines in the vicinity of the New Britain portion of the Busway will not be utilized as it has been determined that the City owned facilities do not have adequate hydraulic capacity. Therefore, new storm water drainage systems are being designed to separate the ConnDOT's drainage systems from the City's drainage systems with the best effort. There are eight separate roadway drainage systems and two bridge deck drainage systems proposed to convey runoff from storm events. Roadway drainage systems 1, 2, 3 and 4 and the bridge deck drainage systems serve the proposed busway. Roadway drainage system 5 serves the Route 72 exit ramp & Route 9 SB entrance ramp area. Roadway drainage system 6 serves the cemetery area. Roadway drainage system 7 serves the East Main street/proposed busway intersection area, and roadway drainage system 8 serves the Florence Street/Harvard Street intersection area.

A water quality basin is proposed towards the end portion of this project to provide water quality measures. The basin includes a forebay area that will function as a sediment basin for storm water pretreatment purposes. Stormwater collected from the Busway (including roadway drainage systems 3 and the bridge deck drainage systems over Allen and East

Street) is discharged into the Water Quality Basin (WQB) before flowing into Piper Brook system. The drainage area contributed to the WQB is approximately 10 acres. The total drainage area of Piper Brook upstream of the discharge point is approximately 2.08 square miles (refer to Preliminary Hydraulic Report, prepared by Garg Consulting Services, dated May 2003). Considering the significant size difference of drainage areas, it may safely be assumed that if the same storm causes peak discharges on both drainage systems, the peaks will be out of phase, and the amount of flow (outlet from WQB, 1.39 *cfs* for a 2-year storm event, 5.81 *cfs* for a 10-year storm event and 23.56 *cfs* for a 100-year event) contributing to Piper Brook will not increase the peak discharge (224 *cfs* for a 2-year storm event, 426 *cfs* for a 10-year storm event and 917 *cfs* for a 100-year event) of Piper Brook. Therefore, there is no requirement to control volume or rate of flow during storm events for this water quality basin.

1. Roadway Drainage Systems

- Drainage System One

System one consists of three proposed catch basins west of Elm Street, serving approximately 1.63 areas drainage area. Stormwater runoff collected by this system will outlet into an existing 24" Reinforce Concrete Pipe (RCP) that discharges into a 96" RCP owned by the City. This system is designed to maintain existing drainage patterns, with divide at Elm Street.

- Drainage System Two – Sta.19+00 to Sta. 29+00

The drainage area for this system is approximately 3.74 acres in size. It encompasses the area along the proposed Busway from the beginning of the project to the west abutment of the proposed bridge over Route 9 Northbound. The proposed drainage system at this portion consists of a pipe system along the proposed busway and a 600 foot long water quality channel. Stormwater runoff collected by the drainage pipe system is discharged into the water quality channel. The water quality channel is proposed to treat and attenuate the water quality volume and convey excess stormwater runoff into the south Route 9 South Trunk Line. Three check dams are

proposed along the water quality channel at Sta.24+00, Sta.26+00 and Sta.28+40, with dam depths of 0.8', 1.2' and 1.5' respectively.

Outlet protections will be installed at the end of the drainage pipe systems. The outfall of Route 9 South Trunk Line at the Retention Basin located north of South Street was inspected during the field visit on Sep 10, 2009 by URS Corp. The inspection details were documented in Appendix N .No erosion issues occur at the site. Pictures were taken and shown in the Appendix M. Outlet upgrade is not recommended by URS Corp.

- Drainage System Three – Sta. 36+00 to Sta.104+00

The drainage area for this system is approximately 10 acres in size. It encompasses the area along the proposed Busway from the proposed bridge abutment over Route 9 on the east side to the proposed bridge abutment over Allen Street and East Street on the south side. The trunk line will outlet through a 30 inch RCP at the east side of the busway into a proposed Water Quality Basin (WQB) at Sta. 98+00 110 ft RT. All the stormwater runoff collected by this system will be routed through the WQB first, and then discharged into the Piper Brook. The outlet structure for this basin is a flow control structure. In this structure, flow in excess of the WQV will pass to Piper Brook directly through a 24" RCP without detention. The double grate frame on the top of the outlet structure will function as a weir, and is designed based on the water surface elevation when the entire WQV is being held in the WQB. A 6" outlet orifice is proposed to ensure the WQV can be released over a period of 24 hours. A trash rack is proposed to protect the orifice from clogging. Outlet protection will be installed at the end of the trunk line. The existing condition of Piper Brook at crossing of East Street in the City of New Britain, approximately 100 feet downstream of the WQV outlet point, was inspected during the field visit on Sep 10, 2009 by URS Corp. The inspection details were documented in Appendix N. No erosion issues occur at the outlet of the culvert and downstream of the Piper Brook channel (Natural channel). Pictures were taken and are shown in the Appendix L. Culvert outlet upgrade at the crossing of East Street is not recommended by URS Corp.

A 12 inch RCP from the Allen and East Street Bridge Deck Drainage System will connect to this proposed trunk line to carry approximately half of the runoff from the bridge deck drainage system. The rest of the runoff will be discharged into drainage system four.

- Drainage System Four– Sta. 110+00 to Sta.118+00

The drainage area for this system is approximately 3.9 acres in size. This system captures drainage along the last portion of the busway. Part of the stormwater runoff from the bridge over Allen Street will be discharged into this system at Sta. 110+00 through a 12" RCP. A drainage ditch is located adjacent the busway on its left side to carry runoff from the multi-use trail. Runoff from the ditch will outlet into the busway system via a catch basin at Sta. 118+00. This drainage system will connect to the adjacent portion of the Busway (State Project No. 88-H034). See the drainage report for State Project No. 88-H034 for more information.

- Drainage System Five – Route 72 Exit Ramp and Route 9 SB Entrance Ramp

The drainage area for this system is approximately 4 acres in size. In order to maintain the watershed patterns with divide at Elm Street, the stormwater runoff collected by the Route 72 Exit Ramp area will not discharge into the proposed busway drainage systems. Drainage in this area will instead outlet into the Route 72/9 trunk line through four existing catch basins along the Route 72 east bound shoulder. This drainage system is divided into sub-areas. The sub-areas correspond to the drainage areas for the four different outfalls.

A 120'-48" RCP was introduced between catch basins in drainage system five before tying into the existing drainage system so that discharges reaching the existing system are equal to or less than discharges currently entering the system. The hydraulic analysis for this 120'- 48" RCP was performed by using Hydrow & Hydrograph 2007 (Developed by the Intelisolve Team). In order to consider the runoff volume effects to

this detention structure, Modified Rational Method was used to generate the input hydrograph. An outlet structure was proposed at the end of this detention system.

New outlet protections have been designed as required to protect the outlets from erosion.

- Drainage System Six – Cemetery Area

The drainage area for this system is approximately 13.62 acres in size. A new catch basin will be installed at the Cemetery Service Road that crosses under the proposed busway to replace the existing catch basin. Stormwater runoff generated in the cemetery area will be carried by the proposed drainage system and discharged into a remnant of Piper Brook existing approximately 200 feet west of the busway.

- Drainage System Seven – East Main Street

The drainage area for this system is approximately 1.89 acres in size. This drainage system is along East Main Street. Two new catch basins will be constructed and two existing catch basins will be reset at low points in the vicinity of East Main Street/Busway intersection area. Stormwater runoff intercepted by those catch basins will be discharged into the existing Fairview cemetery trunkline along East Main Street.

- Drainage System Eight – Florence Street

The drainage area for this system is approximately 1.24 acres in size. This drainage system is along Florence Street. Two new catch basins will be constructed at low points in the vicinity of Florence Street/Harvard Steet intersection area. Stormwater runoff intercepted by those catch basins will be discharged into an existing 48" RCP trunkline along Harvard Street.

2. Bridge Deck Drainage System

- System One

This bridge carries the Busway over Route 9. The proposed bridge is approximately 600 feet long and 46 feet wide. Scuppers are located along both gutter lines of the proposed Busway. There are no scuppers provided along the Multi-Use Trail (MUT). A scupper downspout is designed for each scupper of the bridge. The storm water discharging from the five downspouts will flow overland into five adjacent existing Type "C-L" catch basins along the Route 9 Northbound separately.

- System Two

This bridge carries the Busway over Allen Street and East Street. The bridge length is approximately 500 feet. Scuppers are located along both sides of the Busway. The width of the proposed bridge is 32 feet gutter to gutter. Part of the runoff collected on the bridge during storm events will be discharged into Drainage System Three through a 12 inch RCP pipe. The remainder of the runoff collected on the bridge will be discharged to Drainage System Four through a 12 inch RCP.

IV.Calculations

1. Roadway Drainage Design

The drainage areas were delineated on topographic mapping developed for the project and supplemented with topographic mapping provided by the City of New Britain Engineering Department. Areas were measured in AutoCAD. Watershed areas for each inlet structure are shown in Appendix A. The entire drainage system is designed to control flooding in the 10-year storm frequency. The Rational Method was utilized to estimate the peak discharge rates contributing to the drainage system, except for the 120 foot 48" RCP at Rte 72 exit ramp area where the Modified Rational Method was used. The inlet spacing along the roadways was determined based on an allowable spread as outlined in *Pavement Drainage Design Criteria* (Table 11-2, ConnDOT Drainage Manual, 2000.) The spread was calculated using Manning's Equation and the bypass flow at each inlet structure was computed based on procedures outlined in the ConnDOT

Drainage Manual. Time of concentration for inlet spacing was taken as 5 minutes in paved areas, and 10 minutes in unpaved areas.

The storm trunk lines are sized in accordance with the procedures outlined in the ConnDOT Drainage Manual 2000. The Hydraulic Grade Lines of the drainage systems were analyzed using the StormCAD computer program, version 5.6 (Developed by the Bentley System, Inc.).

The runoff from storm events collected by drainage system three will be discharged into a Water Quality Basin (WQB) before flowing to Piper Brook. The water will be detained and released over a period of 24 hours. The amount of flow to contributing to Piper Brook will not increase the peak discharge of Piper Brook.

All calculations associated to the drainage systems are included in Appendices A, B, C, D, E and F.

2. Bridge Deck Drainage Design

The Rational Method was also utilized to estimate the peak discharge rates contributing to the drainage system from the bridge decks. The inlet spacing along the bridge deck was calculated by using the methods described in HEC-21 "Design of Bridge Deck Drainage." The design storm frequency is the 10-year return period. Allowable width of flow on the bridge deck is limited to 10 feet during the design event as required in *Pavement Drainage Design Criteria* (Table 11-2, ConnDOT Drainage Manual, 2000.) The time of concentration for inlet spacing was taken as 5 minutes on the bridge deck.

Calculations pertaining to the bridge scuppers are included in Appendix G.

3. Water Quality Basin Design

The basin at Sta. 98+00 is designed to address the water quality control and is labeled Water Quality Basin (WQB) on the plans. It is sized based on the Water Quality Volume (WQV). WQB is designed to capture and treat 90% of the entire runoff volume from average annual rainfall event. (WQV is equivalent to the runoff associated with the first one-inch of rainfall; refer to Drainage Manual, Connecticut Department of Transportation, dated 2000). The WQB routing was preformed by using Hydra Flow-Hydrograph 2007(Developed by the Intelisolve Team.) WQB is designed to pass the 100-year storm event with 1 foot of freeboard.

Calculations pertaining to the WQB are included in Appendix F.

4. Channel & Ditch Design

Four permanent grass-lined ditches and one grass –lined roadside channel are proposed in this project. All the ditches and channels are designed to carry the 10 year design flow as outlined in ConnDOT Drainage Manual, 2000. The longitudinal slope will conform to the roadway grade except on flat grades, where the ditch grade will be steeper than the roadway grade. Ditches are designed with trapezoidal or V-type cross sections with 2 horizontal to 1 vertical side slopes or flatter, except from Sta. 27+50 to Sta.28+50 where 1.5 to 1 side slope is used due to the right of way issue. The Manning equation is utilized to calculate the normal depth of the ditches and channels. Manning's n values for grass linings depend on the amount of submergence and are calculated by Equation 4.2 provided in HEC-15 (Appendix C.2, Hydraulic Engineering Circular No.15, and Third Edition). Freeboard in these permanent ditches is designed as 6 inches minimum. The design water depths along the ditches were determined based on the permissible stress as outlined in *Permissible Shear Stress for Lining Materials* (Table 7-4, ConnDOT Drainage Manual, 2000). Class C lining type was adopted for these proposed grass-lined ditches and channels.

Temporary linings for all ditches and channels were designed to remain stable during a 2-year storm event. The allowable shear stress for jute netting is greater than the shear

stress computed during the 10-year storm event (for the permanent lining). Jute netting or woven paper netting is the recommended temporary lining.

Ditch design computations were performed by using HYCHL application program version 6.1 developed for Federal Highway Administration, and are included in Appendix G.

V. APPENDICES

Appendix A

Drainage System One & Two – Sta.19+00 to Sta.29+00

- Drainage Area Analysis
- Initial Tailwater Estimation
- Hydraulic Grade Line Analysis
- Water Quality Channel Design
- Drainage Area Maps

NEW BRITAIN-HARTFORD BUSWAY
New Britain to Hartford
URS PROJECT NO.36937230

URS

DESIGNED BY: LGAO · DATE: 08/18/2009
CHECKED BY: DATE:
SHEET 1 OF 1

Catch Basin Label	Inlet Type	Bypass Target	Drainage Area (ACRE)	Tc (MIN)	I10 (IN/HR)	Impervious		Pervious		Weighted	Q (CFS)
						Coeff.	Area (ac)	Coeff.	Area (ac)	Runoff Coefficient	
Trunk Line One -Sta.19+00 To 29+00											
21+50 34ft LT	CL	N/A	0.413	10	4.8	0.9	0.024	0.3	0.389	0.33	0.66
21+50 16ft RT	C	23+75 16ft RT	0.050	5	6.0	0.9	0.030	0.3	0.020	0.66	0.20
21+50 39ft RT	CL	N/A	0.190	10	4.8	0.9	0.160	0.3	0.030	0.81	0.73
23+75 16ft RT	C	25+75 16ft RT	0.040	5	6.0	0.9	0.040	0.3	0.000	0.90	0.22
25+75 16ft RT	C	27+00 16ft RT	0.020	5	6.0	0.9	0.020	0.3	0.000	0.90	0.11
25+75 33ft RT*	CL	N/A	0.580	10	4.8	0.9	0.140	0.3	0.440	0.44	1.24
27+00 16ft RT	C	28+25 16ft RT	0.040	5	6.0	0.9	0.040	0.3	0.000	0.90	0.22
28+25 16ft RT	C	28+85 16ft RT	0.010	5	6.0	0.9	0.010	0.3	0.000	0.90	0.05
28+85 16ft RT	C	Bridge Deck Drain	0.010	5	6.0	0.9	0.010	0.3	0.000	0.90	0.05
28+85 33ft RT	CL	N/A	0.140	10	4.8	0.9	0.070	0.3	0.070	0.60	0.40

Note:

* Design discharge for Ditch 2. (1.24 cfs - 10-year, 0.93 cfs - 2-yr)

NEW BRITAIN-HARTFORD BUSWAY
New Britain to Hartford
URS PROJECT NO.36937230
DISCHARGE COMPUTATIONS - RATIONAL METHOD

URS

DESIGNED BY: LGAO DATE: 9/21/2009
CHECKED BY: DS DATE: 9/24/2009
SHEET 1 OF 1

Catch Basin Label	Inlet Type	Bypass Target	Drainage Area (ACRE)	Tc (MIN)	I10 IN/HR	Impervious Coeff.	Impervious Area (ac)	Pervious Coeff.	Pervious Area (ac)	Weighted Runoff Coefficient	Q (CFS)
ROUTE 9 SB ENTRANCE RAMP EXISTING DRAINAGE AREA											
EX-A	C-L		0.91	10	4.8	0.9	0.07	0.3	0.84	0.35	1.5
EX-B	C		0.26	5	6.0	0.9	0.26	0.3	0.00	0.90	1.4
EX-C	C-L		0.51	10	4.8	0.9	0.00	0.3	0.51	0.30	0.7
EX-D	C-L		0.16	10	4.8	0.9	0.00	0.3	0.16	0.30	0.2
EX-E	DG		3.42	10	4.8	0.9	1.04	0.3	2.38	0.48	7.9
EX-F	C		0.14	5	6.0	0.9	0.14	0.3	0.00	0.90	0.8
EX-G	C		0.12	5	6.0	0.9	0.12	0.3	0.00	0.90	0.6
EX-H	*C*		*1.15*	*10*	*4.8*	*0.9*	*0.43*	*0.3*	*0.72*	*0.53*	*2.9*
EX-I	*C-L*		*0.23*	*10*	*4.8*	*0.9*	*0.00*	*0.3*	*0.23*	*0.30*	*0.3*
EX-J	C-L		0.23	10	4.8	0.9	0.00	0.3	0.23	0.30	0.3
EX-K	C		0.24	5	6.0	0.9	0.24	0.3	0.00	0.90	1.3
EX-L	*C-L*		*0.12*	*10*	*4.8*	*0.9*	*0.09*	*0.3*	*0.03*	*0.75*	*0.4*
EX-M	*C-L*		*0.28*	*5*	*6.0*	*0.9*	*0.12*	*0.3*	*0.16*	*0.55*	*0.9*
TOTAL			7.77				2.50		5.27		
ROUTE 9 SB ENTRANCE RAMP PROPOSED DRAINAGE AREA											
EX-A	C-L		0.44	10	4.8	0.9	0.10	0.3	0.34	0.44	0.9
PROP-A	C-L		0.39	10	4.8	0.9	0.12	0.3	0.28	0.34	0.6
EX-B	C		0.13	5	6.0	0.9	0.04	0.3	0.10	0.91	0.7
EX-C	C-L		0.58	10	4.8	0.9	0.06	0.3	0.52	0.36	1.0
EX-D	C-L		0.16	10	4.8	0.9	0.00	0.3	0.16	0.30	0.2
EX-E*	DG		3.73	10	4.8	0.9	0.74	0.3	3.00	0.42	7.5
EX-F	C		0.06	5	6.0	0.9	0.06	0.3	0.00	0.90	0.3
EX-G	C		0.12	5	6.0	0.9	0.12	0.3	0.00	0.90	0.6
EX-H	*C*		*1.23*	*10*	*4.8*	*0.9*	*0.00*	*0.3*	*1.23*	*0.30*	*1.8*
EX-I	*C-L*		*0.40*	*10*	*4.8*	*0.9*	*0.08*	*0.3*	*0.32*	*0.42*	*0.8*
EX-J	C-L		0.23	10	6.0	0.9	0.01	0.3	0.22	0.33	0.5
EX-K	C		0.24	5	6.0	0.9	0.24	0.3	0.00	0.90	1.3
TOTAL			7.71				1.55		6.16		

Note:

* Design discharge for Channel 1. (7.5 cfs - 10-year, 5.63 cfs - 2-year)

URS

				Page	of
Job:	NH-BUSWAY	Project No.	36937231	Sheet	of
Description:	Initial Tailwater Estimation	Computed by	LGAO	Date	9/24/2009
	ystem One & Two	Checked by	DS	Date	9/24/2009

System One:

Outlet Pipe ID = 12 inch
Design Discharge = 1.17 cfs
Pipe Slope = 1%
dc (Critical depth) = 0.46 '
(dc + ID) / 2 = 0.73 ft
To be conservative, the outlet crown elevation is chosen as the design tailwater elevation, which is : 163.50 feet

System Two:

Outlet Pipe 1 at Sta. 25+75 ID = 12 inch
Design Discharge = 1.65 cfs
Pipe Slope = .5%
dc (Critical depth) = 0.55 '
(dc + ID) / 2 = 0.78 ft
Water Depth at ditch at 10-year storm event is 1 feet. Convert to elevation = 163.75 feet
The design tailwater elevation is 163.75 feet.

Outlet Pipe 2 at Sta. 28+25 ID = 12 inch
Design Discharge = 0.54 cfs
Pipe Slope = .8%
dc (Critical depth) = 0.31 '
(dc + ID) / 2 = 0.66 ft
Water Depth at ditch at 10-year storm event is 1 feet. Convert to elevation = 163.38 feet
The design tailwater elevation is 163.38 feet.

Scenario: 10-year

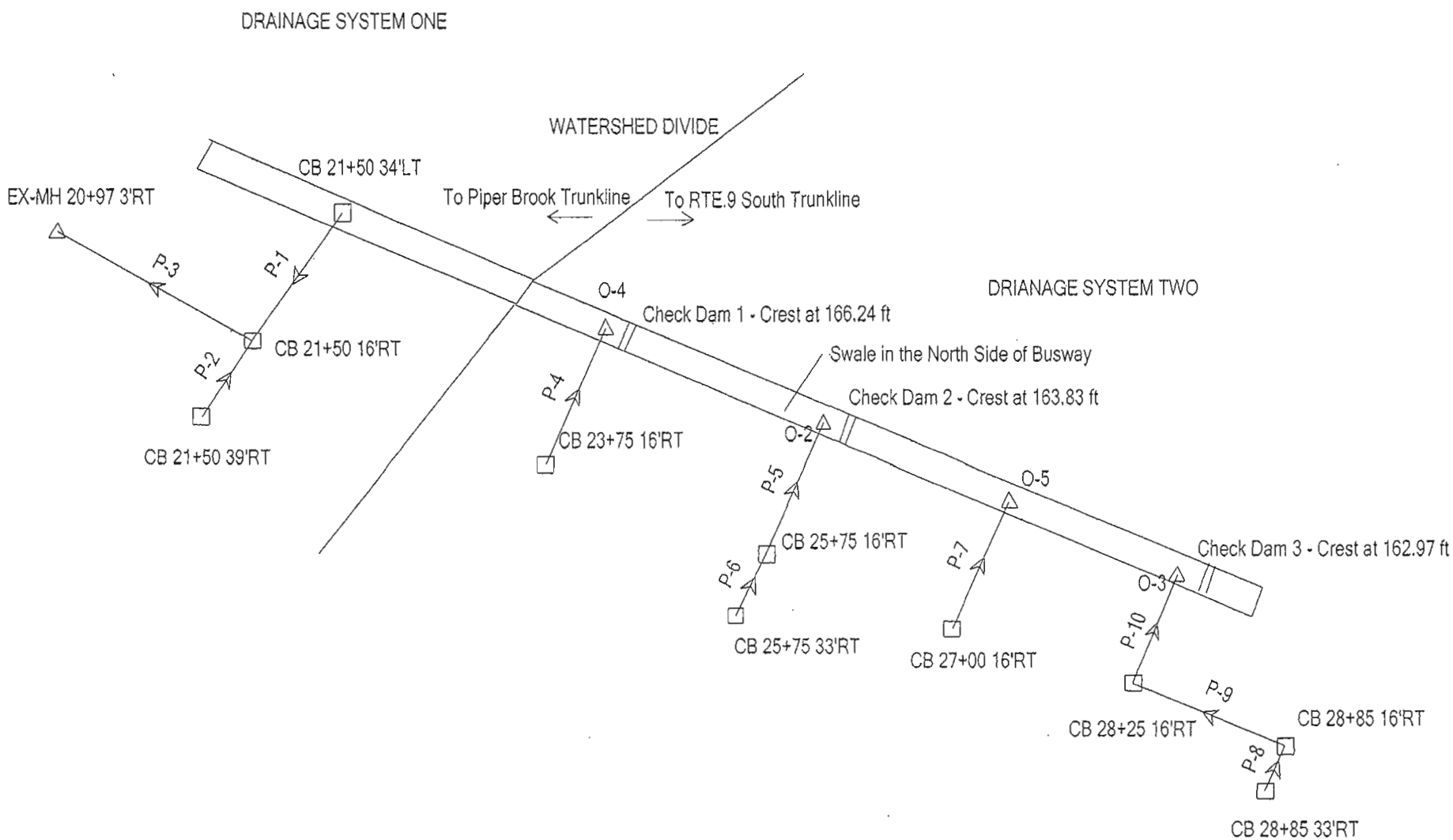

Gutter Flow Analysis (10 yr storm event)

Label	Inlet	Area (acres)	Inlet C	Local Tc (min)	Total Inlet CA (acres)	Total Flow To Inlet (cfs)	Longitudinal Slope (ft/ft)	Gutter Cross Slope (ft/ft)	Gutter Ditch Spread (ft)	Intercepted CA (acres)	Gutter Ditch Depth (ft)	Total Bypassed Flow (cfs)	Bypassed CA (acres)	Clogging Factor (%)
CB 21+50 16'	Combination Type C Single Grate - Grate Type A - P	0.05	0.63	5.00	0.03	0.19	005000	0.040	2.54	0.03	0.10	0.00	0.00	0.0
CB 21+50 34'	Grate Type C-L Single Grate - Grate Type A	0.41	0.34	10.00	0.14	0.67		0.033	5.34	0.14	0.18	0.00	0.00	50.0
CB 21+50 39'	Grate Type C-L Single Grate - Grate Type A	0.19	0.39	10.00	0.07	0.36		0.033	3.96	0.07	0.13	0.00	0.00	50.0
CB 23+75 16'	Combination Type C Single Grate - Grate Type A - P	0.04	0.90	5.00	0.04	0.22	005000	0.019	4.30	0.03	0.08	0.03	0.00	0.0
CB 25+75 16'	Combination Type C Single Grate - Grate Type A - P	0.02	0.90	5.00	0.02	0.13	005000	0.019	3.54	0.02	0.07	0.01	0.00	0.0
CB 25+75 33'	Grate Type C-L Single Grate - Grate Type A	0.58	0.44	10.00	0.26	1.24		0.033	7.39	0.26	0.24	0.00	0.00	50.0
CB 27+00 16'	Combination Type C Single Grate - Grate Type A - P	0.04	0.90	5.00	0.04	0.23	005000	0.019	4.38	0.03	0.08	0.03	0.01	0.0
CB 28+25 16'	Combination Type C Single Grate - Grate Type A - P	0.01	0.90	5.00	0.02	0.11	005000	0.019	3.30	0.02	0.06	0.01	0.00	0.0
CB 28+85 16'	Combination Type C Single Grate - Grate Type A - P	0.01	0.90	5.00	0.01	0.08	005000	0.027	2.39	0.01	0.06	0.00	0.00	0.0
CB 28+85 33'	Grate Type C-L Single Grate - Grate Type A	0.14	0.60	10.00	0.08	0.40		0.033	4.16	0.08	0.14	0.00	0.00	50.0

Sc[illegible] 10-year

DOT Report

Upstream Node	Downstream Node	Pipe Flow Time (min)	System Flow Time (min)	Upstream Inlet CA (acres)	System CA (acres)	System Intensity (in/hr)	Section Size	Material	Mannings n	Length (ft)	Upstream Invert Elevation (ft)	Downstream Invert Elevation (ft)	Constructed Slope (ft/ft)	Full Capacity (cfs)	Total System Flow (cfs)	Average Velocity (ft/s)
CB 21+50 34'LT	CB 21+50 16'	0.24	10.00	0.14	0.14	4.80	12 inch	Concrete	0.013	45.00	165.34	165.00	0.007556	3.10	0.67	3.1
CB 21+50 39'RT	CB 21+50 16'	0.07	10.00	0.07	0.07	4.80	12 inch	Concrete	0.013	23.00	166.70	165.00	0.073913	9.69	0.36	5.9
CB 21+50 16'RT	EX-MH 20+97	0.30	10.24	0.03	0.24	4.78	12 inch	Concrete	0.013	53.00	165.00	164.77	0.004340	2.35	1.17	3.0
CB 23+75 16'RT	O-4	0.21	5.00	0.05	0.04	6.00	12 inch	Concrete	0.013	37.00	166.32	165.82	0.013514	4.14	0.27	3.0
CB 25+75 16'RT	O-2	0.26	10.04	0.02	0.28	4.80	12 inch	Concrete	0.013	50.00	163.00	162.75	0.005000	2.52	1.36	3.3
CB 25+75 33'RT	CB 25+75 16'	0.04	10.00	0.26	0.26	4.80	12 inch	Concrete	0.013	17.00	163.94	163.35	0.034706	6.64	1.24	6.5
CB 27+00 16'RT	O-5	0.18	5.00	0.04	0.03	6.00	12 inch	Concrete	0.013	45.00	164.21	162.15	0.045778	7.62	0.20	4.2
CB 28+85 33'RT	CB 28+85 16'	0.09	10.00	0.08	0.08	4.80	12 inch	Concrete	0.013	17.00	163.52	163.35	0.010000	3.56	0.40	3.0
CB 28+85 16'RT	CB 28+25 16'	0.33	10.09	0.01	0.10	4.79	12 inch	Concrete	0.013	60.00	163.35	162.80	0.009167	3.41	0.46	3.0
CB 28+25 16'RT	O-3	0.29	10.42	0.01	0.11	4.76	12 inch	Concrete	0.013	52.00	162.80	162.38	0.008077	3.20	0.54	3.0

Sc[illegible]n: 10-year

Pipe Report

Label	Upstream Node	Downstream Node	Section Size	Length (ft)	Cons Slope (ft/ft)	Total System Flow (cfs)	Full Capacity (cfs)	Average Velocity (ft/s)	Hydraulic Grade Line Out (ft)	Hydraulic Grade Line In (ft)	Upstream Invert Elevation (ft)	Downstream Invert Elevation (ft)	Upstream Ground Elevation (ft)	Downstream Ground Elevation (ft)	Upstream Cover (ft)	Downstream Cover (ft)	Mannings n
P-1	CB 21+50 34	CB 21+50 16'	12 inch	45.00	0.007556	0.67	3.10	3.1	165.83	165.83	165.34	165.00	168.42	170.27	2.08	4.27	0.013
P-2	CB 21+50 39	CB 21+50 16'	12 inch	23.00	0.073913	0.36	9.69	5.9	165.82	166.95	166.70	165.00	171.00	170.27	3.30	4.27	0.013
P-3	CB 21+50 16	EX-MH 20+97	12 inch	53.00	0.004340	1.17	2.35	3.0	165.77	165.81	165.00	164.77	170.27	166.93	4.27	1.16	0.013
P-4	CB 23+75 16	O-4	12 inch	37.00	0.013514	0.27	4.14	3.0	166.24	166.53	166.32	165.82	169.81	165.44	2.49	-1.38	0.013
P-5	CB 25+75 16	O-2	12 inch	50.00	0.005000	1.36	2.52	3.3	163.83	163.89	163.00	162.75	168.81	162.75	4.81	-1.00	0.013
P-6	CB 25+75 33	CB 25+75 16'	12 inch	17.00	0.034706	1.24	6.64	6.5	163.90	164.41	163.94	163.35	166.74	168.81	1.80	4.46	0.013
P-7	CB 27+00 16	O-5	12 inch	45.00	0.045778	0.20	7.62	4.2	162.97	164.39	164.21	162.15	168.18	161.47	2.97	-1.68	0.013
P-8	CB 28+85 33	CB 28+85 16'	12 inch	17.00	0.010000	0.40	3.56	3.0	163.67	163.78	163.52	163.35	165.90	167.13	1.38	2.78	0.013
P-9	CB 28+85 16	CB 28+25 16'	12 inch	60.00	0.009167	0.46	3.41	3.0	163.15	163.63	163.35	162.80	167.13	167.56	2.78	3.76	0.013
P-10	CB 28+25 16	O-3	12 inch	52.00	0.008077	0.54	3.20	3.0	162.97	163.11	162.80	162.38	167.56	162.38	3.76	-1.00	0.013

Profile: Profile - 1

Scenario: 10-year

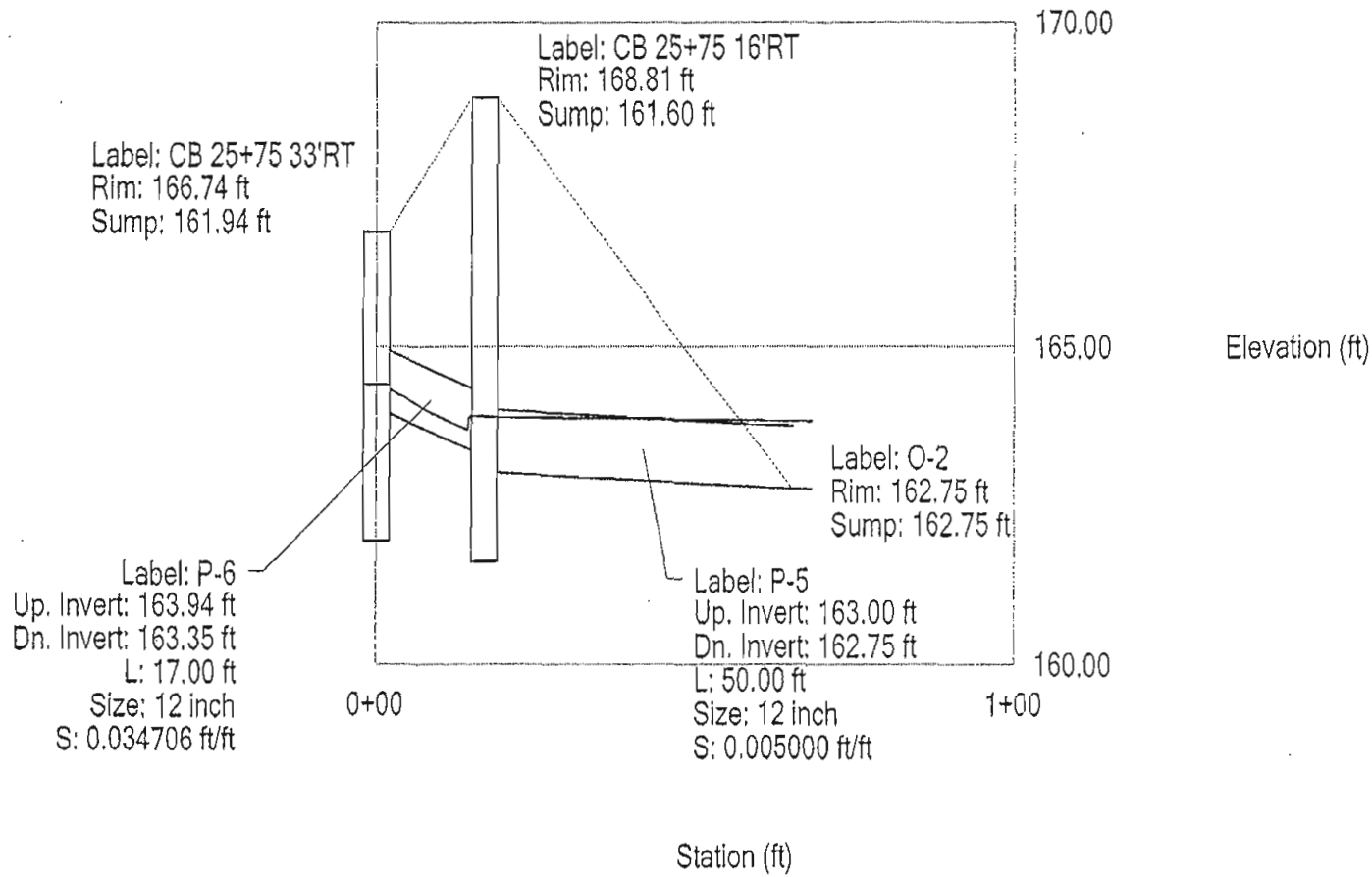

Profile: Profile - 2

Scenario: 10-year

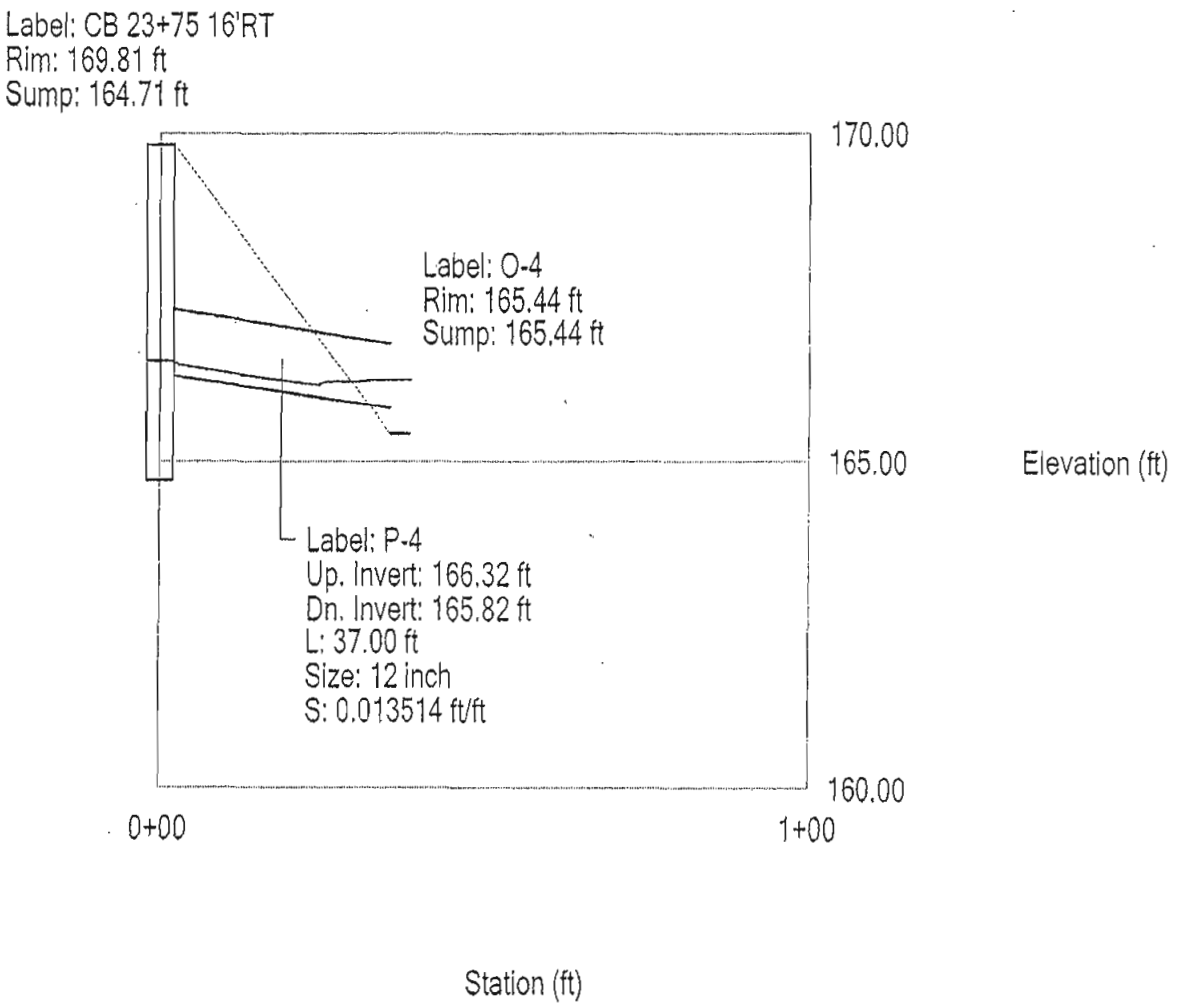

Profile: Profile - 3

Scenario: 10-year

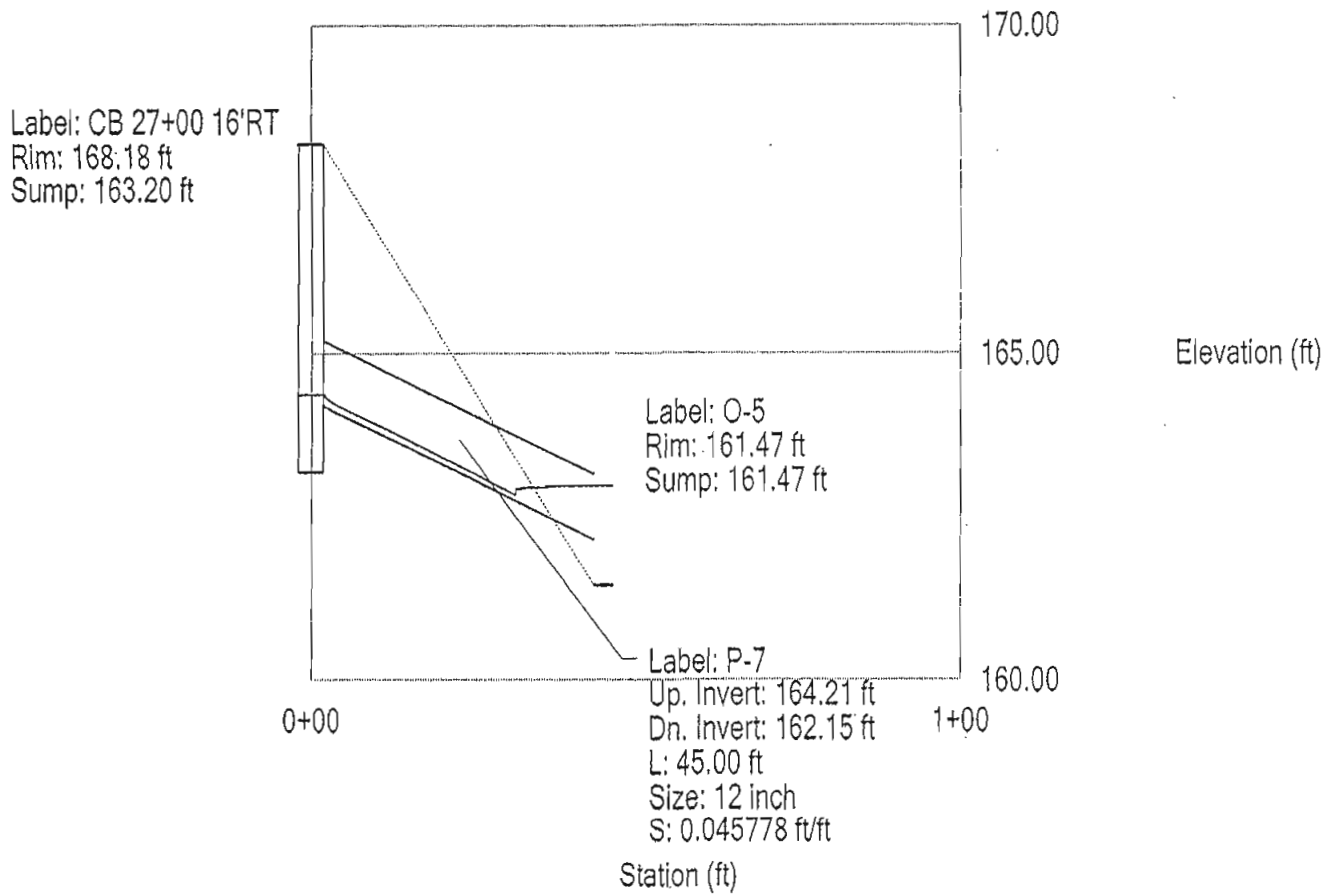

Profile: Profile - 4

Scenario: 10-year

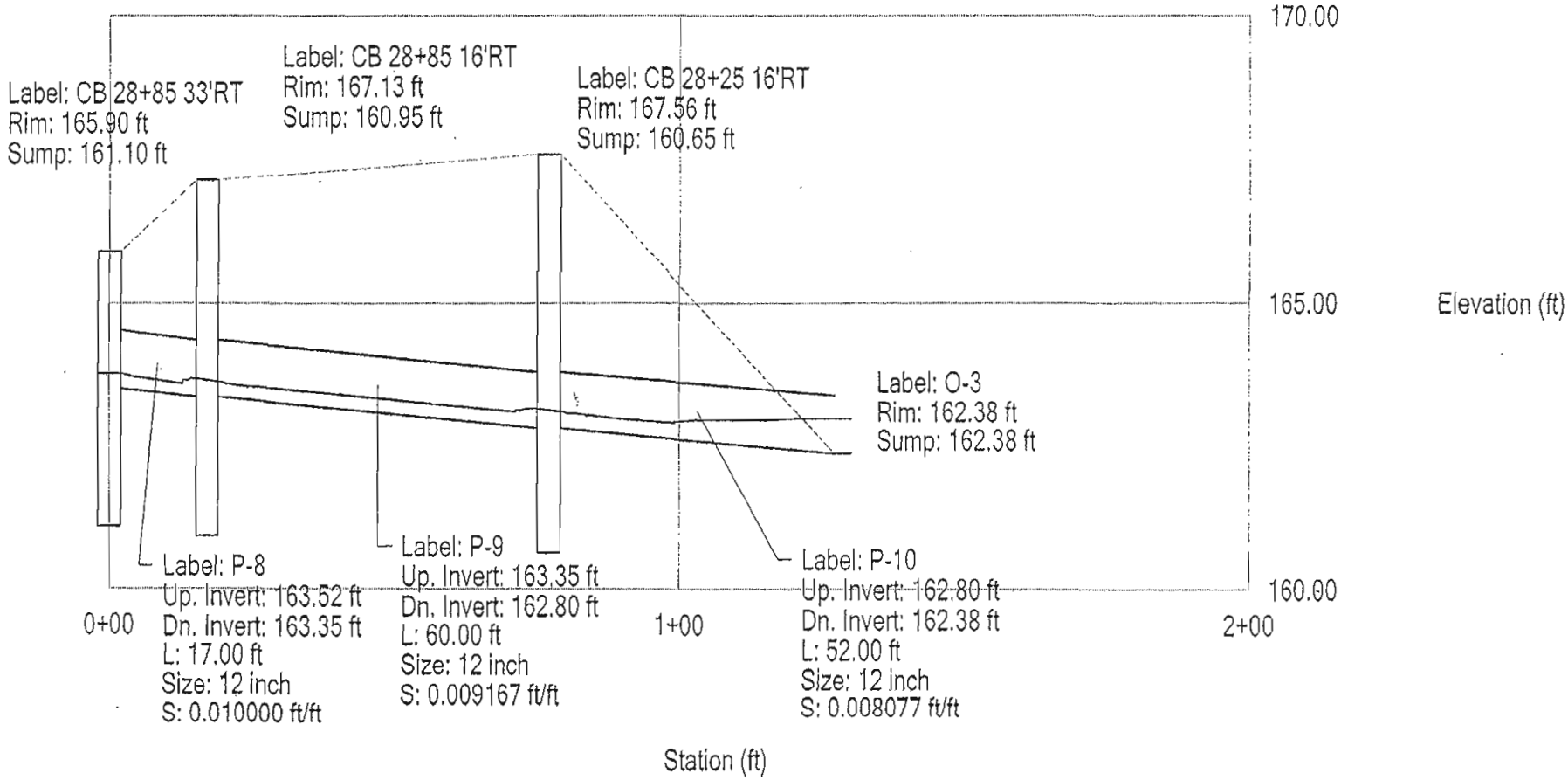

Profile: Profile - 5

Scenario: 10-year

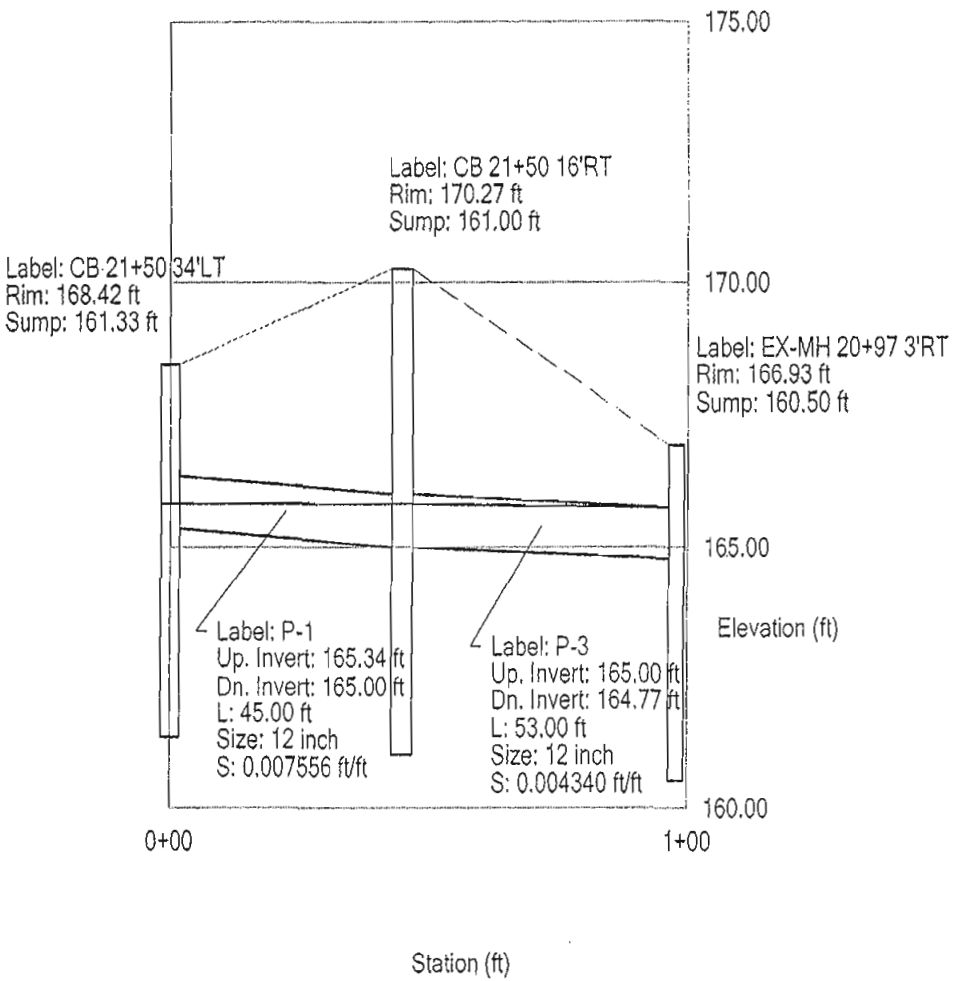

Profile: Profile - 6

Scenario: 10-year

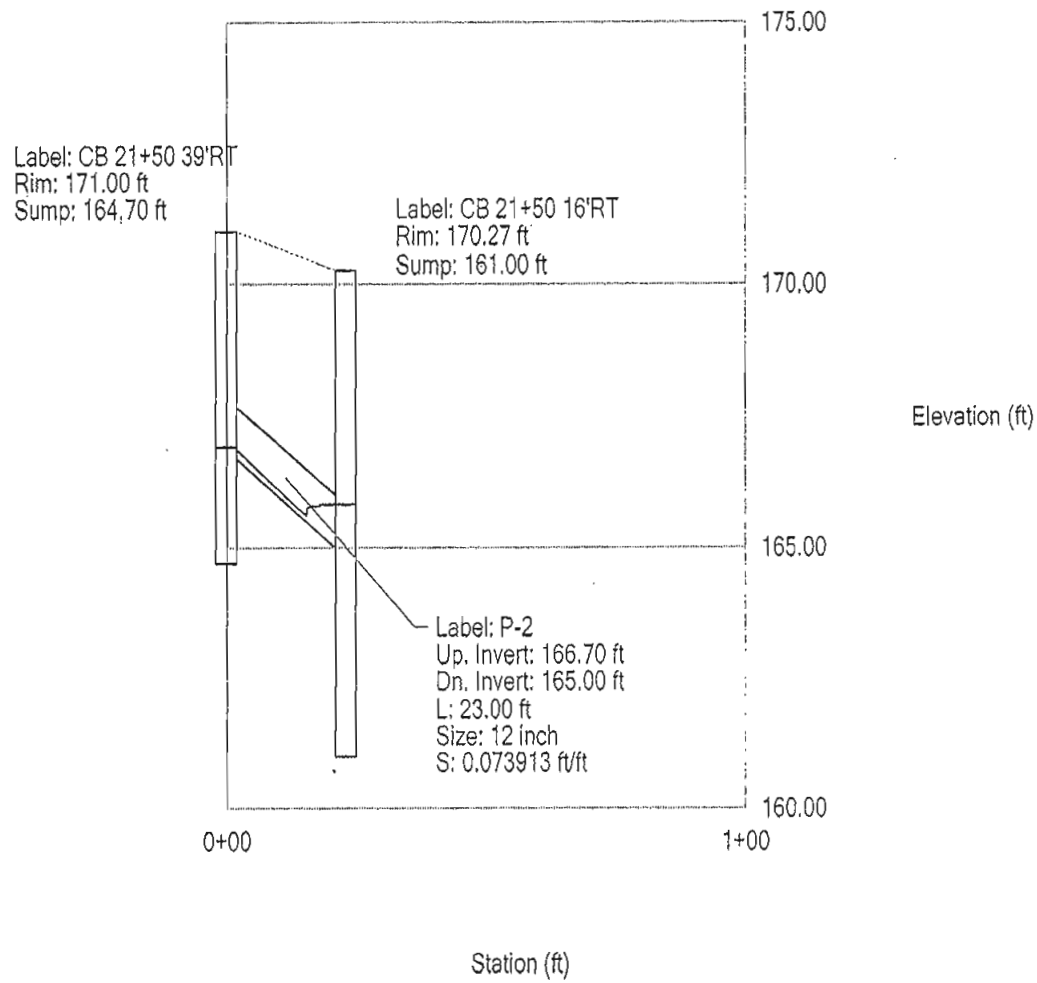

Introduction:

Water Quality Channel is proposed from Sta. 22+25 to Sta. 28+75 to address stormwater quality control and convey the excess stormwater runoff. It is labeled "Water Quality Channel" on the plans. The dimension of the channel is sized based on both Water Quality Volume (WQV) and the design discharge at 10 year frequency. All the storm runoff will be routed through the water quality channel first, and then discharged into the Route 9 storm drain trunk line. Three check dams are proposed along the water quality change at Sta.24+00, Sta.26+00 and Sta.28+40, with dam depths of 0.8', 1.2' and 1.5' respectively. Flow in excess of the WQV will pass to the Route 9 storm drain trunk line through a 15" CMP without detention. The following figure shows the typical cross section of the water quality channel.

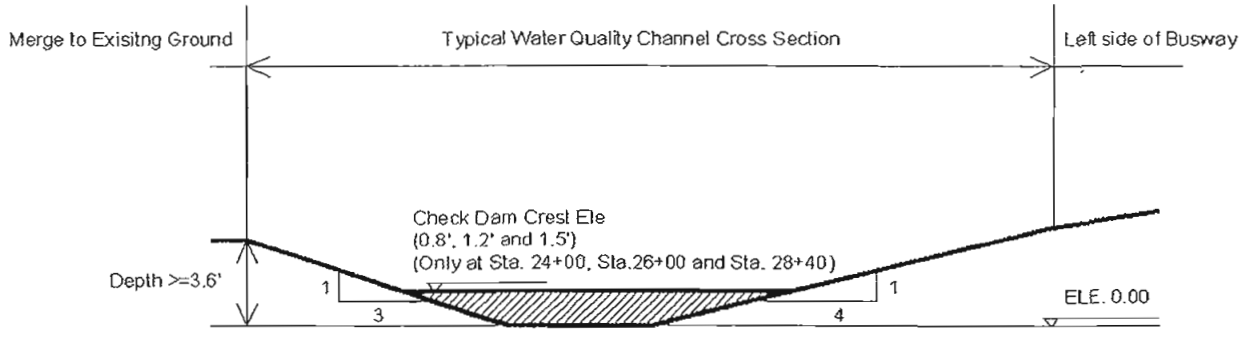

Water Quality Channel Design Criteria:

1. Water Quality Channel is designed to capture and treat 90% of entire runoff volume of the average annual storm event. WQV is equivalent to the runoff associated with the first one-inch of rainfall. (*)

2. Bottom width is 6 feet. (**)

3. Shape – Trapezoidal. (**)

4. Side slope – 3:1 (H: V) side slope on the left side of the channel and 4:1 (H: V) side slope on the right side for providing easy maintenance access. (**)

5. Sizing criteria: Length with depth, and slope needed to provide surface storage for the WQV. The maximum ponding time is 24 hours. (**)

6. Depth and Capacity: Surface storage of WQV with a maximum ponding depth of 18 inches for water quality treatment. Adequate capacity for 10-year storm with 6 inches of freeboard. (**)

Note: * - Refer to Drainage Manual, Connecticut Department of Transportation, dated 2000.

** - Refer to 2004 Connecticut Storm Water Quality Manual.

Water Quality Volume:

Water Quality Volume estimation for water quality control channel from Sta.22+50 to Sta.28+75:

According to the drainage areas plan, the basin for water quality control will be subject to the runoff from the 3.74 acres watershed.

$$\mathbf{WQV} = \frac{(1")(R)(A)}{12}$$

Where: 1" refer to the first one-inch of rainfall.
WQV = Water Quality Volume, hectare meters (acre ft)
R = Volumetric Runoff Coefficient=0.05+0.009(I)
I = Percent of Impervious Cover, 20 (%)
A = Site area, 10.25 acres

$$\mathbf{WQV} = \frac{(1")(0.05 + 0.009 \cdot 20)(3.74)}{12}$$

$= 0.072$ acre ft
$= 3120$ cu.ft

Check Dams Sizing:

There are three check dams along the water quality channel. The location and depth for each check dam is based on the surface storage of WQV.

The following figure shows the longitudinal profile of the water quality channel and the locations of the check dams. The surface storages are computed separately at different check dams.

URS

Job NH-BUSWAY	Project No. 36937231	Page of
Description WATER QUALITY CHANNEL	Computed by LGAO	Date 12/1/2009
	Checked by DS	Date 12/02/2009

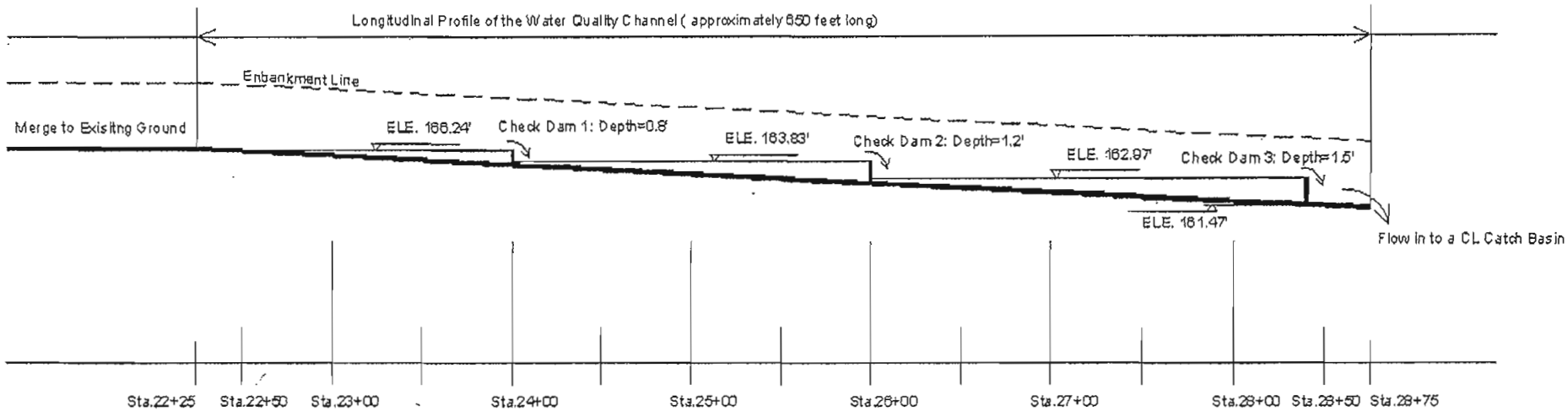

Bottom Channel Slope = 0.005 *ft/ft*

Surface storage 1: (In front of the check dam 1) V1= 1/3 A.L = 1/3 x 7.04 x 175 = 410 *cu.ft*

In which A is the flow area at check dam1; L is the channel length before the check dam 1.

Surface storage 2: (In front of the check dam 2) V2= 1/3 A.L = 1/3 x 12.24 x 200 = 816 *cu.ft*

In which A is the flow area at check dam2; L is the channel length before the check dam 1.

Surface storage 3: (In front of the check dam 3) V3= 1/2 (A1+A2).L = 1/2 x (2.44+16.88) x 240 = 2318 *cu.ft*

In which A1 is the flow area at check dam2 on the right side;

A2 is the flow area at check dam3;

L is the channel length before the check dam 1.

Total surface storage V = V1+V2+V3 = 410+816+2318 = 3544 *cu.ft* > WQV (3120)

Free Border Checking:

$Q_{10} = 7.5\ cfs$

The following weir flow computation refers to Hydraulic Design Handbook, Larry W. Mays, and Dated 1999.

Weir equation: $Q = CLH^{3/2}$

C – Discharge coefficient of weir 3.95 (Refer to Figure 17.1 Discharge coefficients for a vertical-faced ogee crest, Hydraulic Design Handbook)

L – Crest Length, 11.6', 14.4' and 16.5' for different check dams.

H – Design Head

- ⇨ H = 0.30', 0.26' and 0.24' at different check dams.
- ⇨ Water surface elevations at check dams are: 166.54', 164.09' and 163.21'.
- ⇨ Minimum Free board is > 1.5'

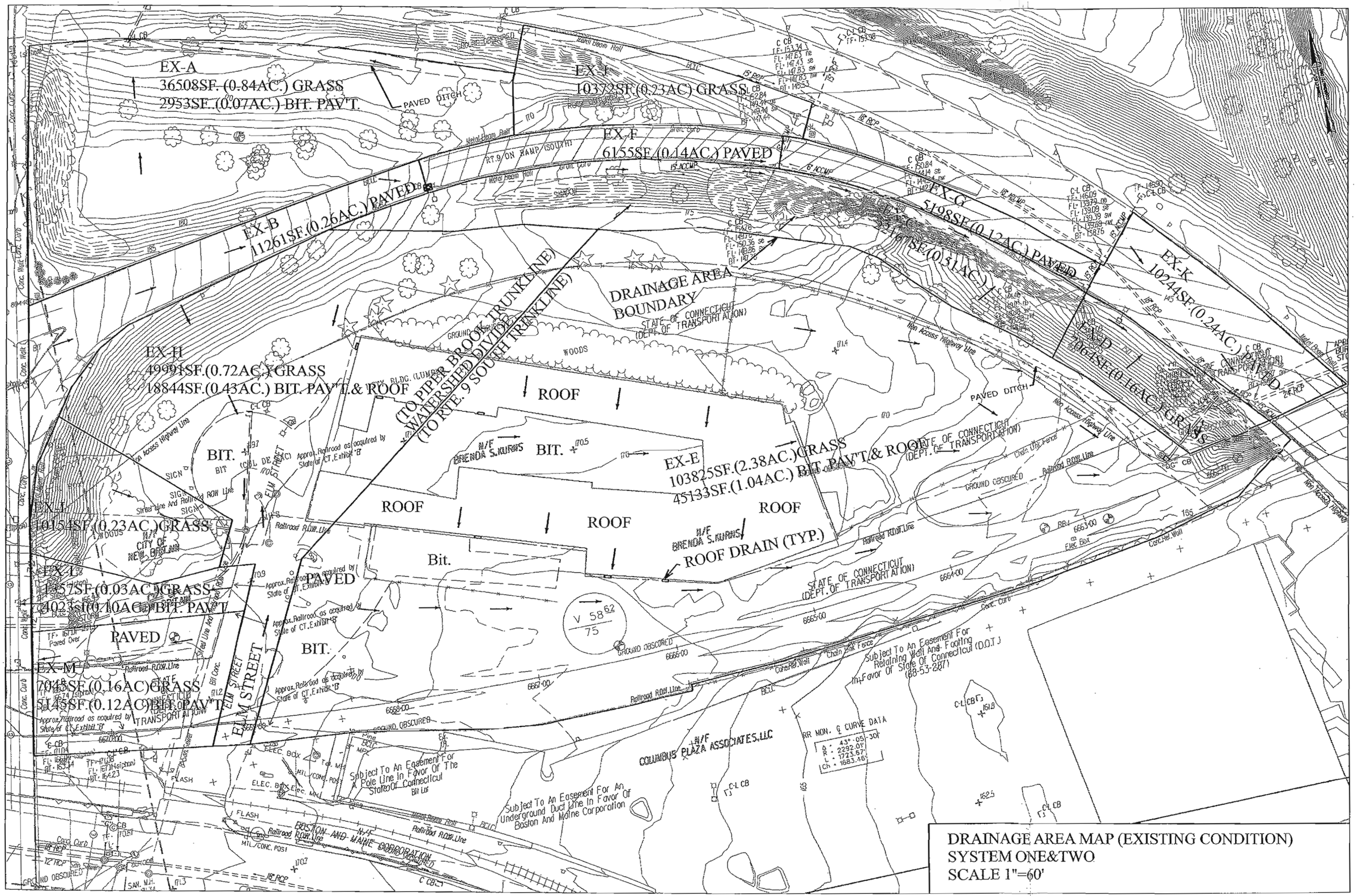

DRAINAGE AREA MAP (EXISTING CONDITION)
SYSTEM ONE&TWO
SCALE 1"=60'

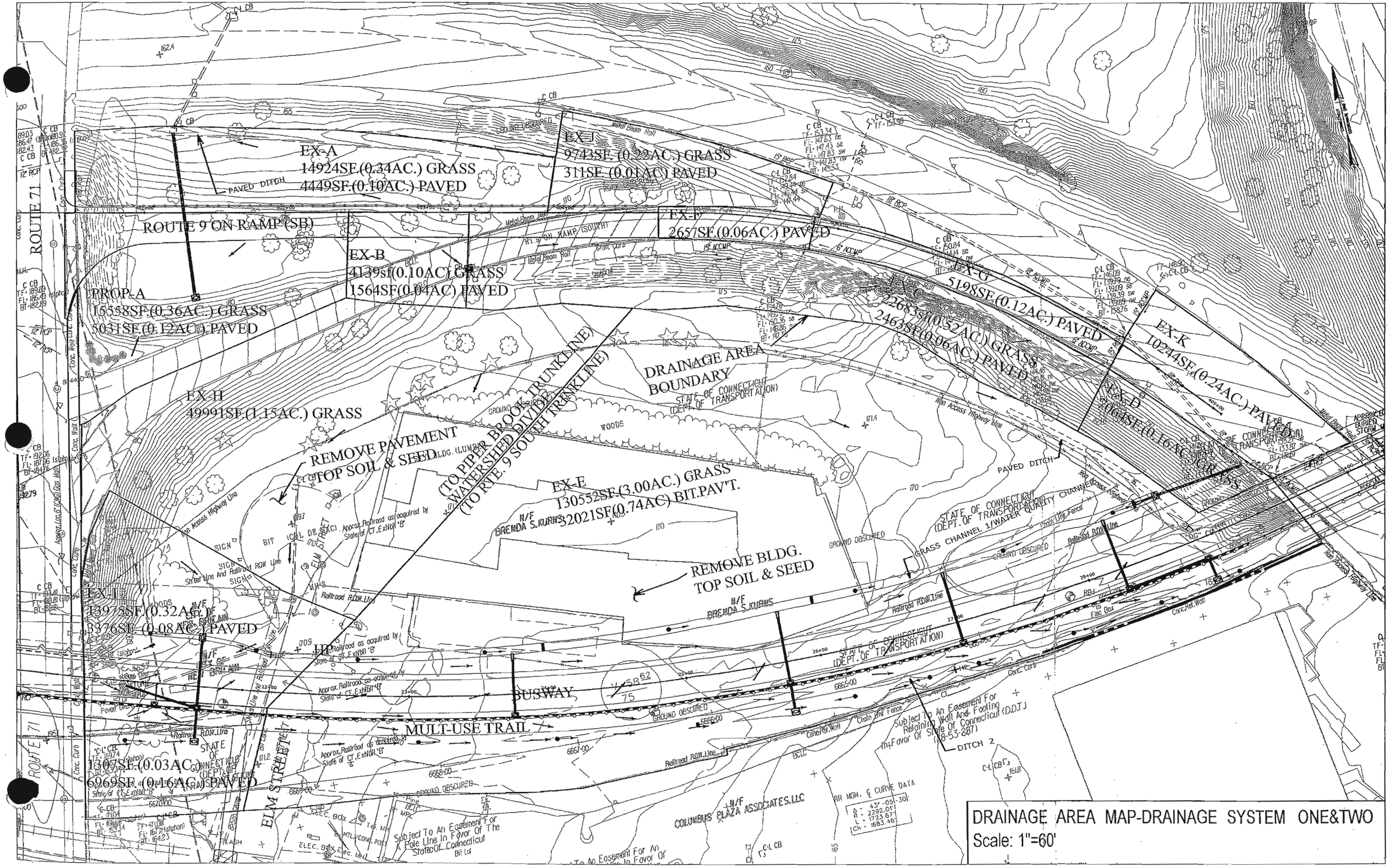
EX-A
14924SF.(0.34AC.) GRASS
4449SF.(0.10AC.) PAVED
EX-J
9743SF. (0.22AC.) GRASS
311SF. (0.01AC) PAVED
EX-F
2657SF.(0.06AC.) PAVED
ROUTE 9 ON RAMP (SB)
EX-B
4139sf(0.10AC.) GRASS
1564SF(0.04AC) PAVED
PROP-A
15558SF.(0.36AC.) GRASS
5031SF.(0.12AC.) PAVED
EX-G
5198SF.(0.12AC.) PAVED
EX-C
22683sf(0.52AC.) GRASS
2463SF.(0.06AC.) PAVED
EX-K
10244SF.(0.24AC.) PAVED
EX-D
7064SF.(0.16AC.) GRASS
DRAINAGE AREA BOUNDARY
(TO PIPER BROOK TRUNKLINE)
WATERSHED DIVIDE
(TO RTE. 9 SOUTH TRUNKLINE)
EX-H
49991SF.(1.15AC.) GRASS
REMOVE PAVEMENT
TOP SOIL & SEED
EX-E
130552SF.(3.00AC.) GRASS
32021SF(0.74AC) BIT.PAV'T.
REMOVE BLDG.
TOP SOIL & SEED
EX-I
13975SF.(0.32AC.)
3376SF.(0.08AC.) PAVED
BUSWAY
MULT-USE TRAIL
1307SF.(0.03AC.)
6969SF.(0.16AC.) PAVED
ROUTE 71
ELM STREET
PAVED DITCH
DITCH 2
STATE OF CONNECTICUT (DEPT. OF TRANSPORTATION)
GRASS CHANNEL 1/WATER QUALITY CHANNEL
COLUMBUS PLAZA ASSOCIATES, LLC
BRENDA S. BURNS
Subject To An Easement For A Pole Line In Favor Of The State Of Connecticut
Subject To An Easement For Retaining Wall And Footing In Favor Of State Of Connecticut (D.O.T.) (98-53-287)
DRAINAGE AREA MAP-DRAINAGE SYSTEM ONE&TWO
Scale: 1"=60'

Appendix B

Drainage System Three – Sta.36+00 to Sta.104+00

- Drainage Area Analysis
- Initial Tailwater Estimation
- Hydraulic Grade Line Analysis
- Hydraulic Analysis for Slotted Drain
- Drainage Area Maps

NEW BRITAIN-HARTFORD BUSWAY
New Britain to Hartford
URS PROJECT NO.36937230

URS

DESIGNED BY: DS DATE: 04/20/2009
CHECKED BY: LGAO DATE: 08/18/2009

Catch Basin Label	Inlet Type	Bypass Target	Drainage Area (ACRE)	Tc (MIN)	I10 IN/HR	Impervious Coeff.	Impervious Area (ac)	Pervious Coeff.	Pervious Area (ac)	Weighted Runoff Coefficient	Q (CFS)
Drainage System Two -Sta.36+00 To 104+00-SECTION-A											
36+50 16ft RT	C	STANLEY STREET	0.0553	5	6.0	0.9	0.0553	0.3		0.90	0.299
36+62 20ft LT	C-L	N/A	0.1112	10	4.8	0.9	0.0725	0.3	0.0387	0.69	0.369
36+88 28ft LT	C-L	N/A	0.0501	5	6.0	0.9	0.0501	0.3		0.90	0.271
39+00 16ft RT	C	41+50 16ft RT	0.1456	5	6.0	0.9	0.1456	0.3		0.90	0.786
41+50 16ft RT	C	44+00 16ft RT	0.1623	5	6.0	0.9	0.1623	0.3		0.90	0.877
44+00 24ft LT-DITCH-3A	C-L	49+00 24ft LT-DITCH-5B	0.5554	10	4.8	0.9	0.3026	0.3	0.2527	0.63	1.671
44+00 16ft RT	C	46+50 16ft RT	0.1629	5	6.0	0.9	0.1629	0.3		0.90	0.880
46+50 16ft RT	C	49+00 16ft RT	0.1625	5	6.0	0.9	0.1625	0.3		0.90	0.878
49+00 24ft LT-DITCH-3B	C-L	52+50 24ft LT-DITCH-5C	0.4149	10	4.8	0.9	0.2234	0.3	0.1915	0.62	1.241
49+00 16ft RT	C	N/A	0.1831	5	6.0	0.9	0.1831	0.3		0.90	0.989
50+75 16ft RT	C	50+75 16ft RT	0.0419	5	6.0	0.9	0.0419	0.3		0.90	0.226
51+75 16ft RT	C	52+75 16ft RT	0.0411	5	6.0	0.9	0.0411	0.3		0.90	0.222
52+75 24ft LT-DITCH-3C	C-L	55+25 24ft LT-DITCH-5D	0.6735	10	4.8	0.9	0.4649	0.3	0.2086	0.71	2.309
52+75 16ft RT	C	53+75 16ft RT	0.0393	5	6.0	0.9	0.0393	0.3		0.90	0.212
53+75 16ft RT		55+25 16ft RT	0.0384	5	6.0	0.9	0.0384	0.3		0.90	0.207
54+00 24ft LT-DITCH-3D	C-L	N/A	0.4559	10	4.8	0.9	0.3511	0.3	0.1048	0.76	1.668
55+25 16ft RT	C	57+21 16ft RT	0.0565	5	6.0	0.9	0.0565	0.3		0.90	0.305
57+21 16ft LT	C	506+67 13ft RT	0.1837	5	6.0	0.9	0.1837	0.3		0.90	0.992
57+21 16ft RT	C	508+63 15ft RT	0.0753	5	6.0	0.9	0.0753	0.3		0.90	0.406
Drainage System Two -Sta.36+00 To 104+00-SECTION-B											
62+00 23ft LT-DITCH-6A	C-L	66+00 23ft LT-DITCH-6B	0.4611	10	4.8	0.9	0.2761	0.3	0.1849	0.66	1.459
62+00 16ft RT	C	64+50 16ft RT	0.1156	5	6.0	0.9	0.1156	0.3		0.90	0.624
64+00 16ft RT	C	66+00 16ft RT	0.0602	5	6.0	0.9	0.0602	0.3		0.90	0.325
66+00 23ft LT-DITCH-6B	C-L	N/A	0.7335	5	6.0	0.9	0.2533	0.3	0.4803	0.51	2.232
66+00 16ft RT	C	511+74 15ft RT	0.0806	5	6.0	0.9	0.0806	0.3		0.90	0.435
BUSWAY AT SMALLEY STREET INTERSECTION											
510+60.4 15ft LT	C	N/A	0.1247	5	6.0	0.9	0.1247	0.3		0.90	0.673
510+44 15ft RT	C	N/A	0.1117	5	6.0	0.9	0.1117	0.3		0.90	0.603
511+74 15ft RT	C	N/A	0.0666	5	6.0	0.9	0.0666	0.3		0.90	0.359
511+77 15ft LT	C	N/A	0.0529	5	6.0	0.9	0.0529	0.3		0.90	0.286
69+00 16ft RT		71+00 16ft RT	0.0648	5	6.0	0.9	0.0648	0.3		0.90	0.350
69+00 16ft RT-MUT	C-M-2	71+00 16ft RT-MUT	0.0500	5	6.0	0.9	0.0500	0.3		0.90	0.270
69+00 16ft LT	C-M	71+00 16ft LT	0.1531	5	6.0	0.9	0.1531	0.3		0.90	0.827

NEW BRITAIN-HARTFORD BUSWAY
New Britain to Hartford
URS PROJECT NO.36937230

URS
DESIGNED BY: DS DATE: 04/20/2009
CHECKED BY: LGAO DATE: 08/18/2009

71+00 16ft RT		73+50 16ft RT	0.0731	5	6.0	0.9	0.0731	0.3		0.90	0.395
71+00 16ft RT-MUT	C-M-2	73+50 16ft RT-MUT	0.0559	5	6.0	0.9	0.0559	0.3		0.90	0.302
71+00 16ft LT	RPW	73+50 16ft RT	0.0731	5	6.0	0.9	0.0731	0.3		0.90	0.395
73+50 16ft RT		76+50 16ft RT	0.1028	5	6.0	0.9	0.1028	0.3		0.90	0.555
73+50 16ft RT	C-M-2	76+50 16ft RT-MUT	0.0699	5	6.0	0.9	0.0699	0.3		0.90	0.378
73+50 16ft LT	RPW	76+50 16ft LT	0.1028	5	6.0	0.9	0.1028	0.3		0.90	0.555
76+50 16ft RT		79+50 16ft RT	0.1234	5	6.0	0.9	0.1234	0.3		0.90	0.666
76+50 16ft RT-MUT	C-M-2	79+50 16ft RT-MUT	0.0831	5	6.0	0.9	0.0831	0.3		0.90	0.449
76+50 16ft LT	RPW	79+50 16ft LT	0.1234	5	6.0	0.9	0.1234	0.3		0.90	0.666
79+50 16ft RT		82+50 16ft RT	0.1234	5	6.0	0.9	0.1234	0.3		0.90	0.666
79+50 16ft RT-MUT	C-M-2	82+50 16ft RT-MUT	0.0832	5	6.0	0.9	0.0832	0.3		0.90	0.450
79+50 16ft LT	RPW	82+50 16ft LT	0.1234	5	6.0	0.9	0.1234	0.3		0.90	0.666
82+50 16ft RT		85+50 16ft RT	0.1234	5	6.0	0.9	0.1234	0.3		0.90	0.666
82+50 16ft RT-MUT	C-M-2	85+50 16ft RT-MUT	0.0833	5	6.0	0.9	0.0833	0.3		0.90	0.450
82+50 16ft LT	RPW	85+50 16ft LT	0.1234	5	6.0	0.9	0.1234	0.3		0.90	0.666
85+50 16ft RT		88+37 16ft RT	0.1091	5	6.0	0.9	0.1091	0.3		0.90	0.589
85+50 16ft RT-MUT	C-M-2	88+37 16ft RT-MUT	0.2989	5	6.0	0.9	0.2989	0.3		0.90	1.614
85+50 16ft LT	C-M	88+37 16ft LT	0.0473	5	6.0	0.9	0.0473	0.3		0.90	0.255
Trunk Line Two -Sta.36+00 To 104+00-SECTION-C											
88+10 19ft RT	C	N/A	0.0376	5	6.0	0.9	0.0376	0.3		0.90	0.203
88+37 16ft RT	C-M	91+00 16ft RT	0.0383	5	6.0	0.9	0.0383	0.3		0.90	0.207
88+37 16ft LT	C-M	91+00 16ft LT	0.1819	5	6.0	0.9	0.1819	0.3		0.90	0.982
91+00 16ft LT	C-M	95+00 16ft LT	0.0583	5	6.0	0.9	0.0583	0.3		0.90	0.315
91+00 16ft RT	C-M	95+00 16ft RT	0.0476	5	6.0	0.9	0.0476	0.3		0.90	0.257
95+00 16ft RT	C	96+50 16ft RT	0.2205	5	6.0	0.9	0.1575	0.3	0.0631	0.73	0.964
95+00 16ft LT	C	97+83 16ft LT	0.0581	5	6.0	0.9	0.0398	0.3	0.0183	0.71	0.248
96+50 16ft RT	C	97+83 16ft RT	0.1003	5	6.0	0.9	0.1003	0.3		0.90	0.541
97+16 16ft RT (FLANKER CB)	C										
97+83 16ft RT	DBL C TYP-II	N/A	0.2015	5	6.0	0.9	0.2015	0.3		0.90	1.088
97+83 16ft LT	C	N/A	0.0659	5	6.0	0.9	0.0659	0.3		0.90	0.356
98+59 16ft RT (FLANKER CB)	RPW										
99+50 16ft RT	RPW	97+83 16ft RT	0.1030	5	6.0	0.9	0.1030	0.3		0.90	0.556
101+00 16ft RT	RPW	99+50 16ft RT	0.2058	5	6.0	0.9	0.2058	0.3		0.90	1.111
101+00 16ft LT	RPW	97+83 16ft LT	0.0384	5	6.0	0.9	0.0384	0.3		0.90	0.207

URS

				Page	of
Job:	NH-BUSWAY	Project No.	36937231	Sheet	of
Description:	Initial Tailwater Estimation	Computed by	LGAO	Date	9/24/2009
System Three		Checked by	DS	Date	9/24/2009

System Three:

Water Qulity Basin Outlet Pipe ID 24" RCP Pipe
Water surface elevation for the discharge point at Piper Brook is 94.36 feet at 100-year flood event.
(refer to Preliminary Hydraulic Report, prepared by Garg Consulting Services, dated May 2003).
The design tailwater for routing the Water Qulity Basin is 94.36 feet.

Busway drainage pipe system outlet pipe at Water Qulity Basin ID 30" RCP
The water surface elevation at Water Quality Basin is 97.96 feet at 10-year storm event.
The design tailwater elevation for the Busway Pipe Drainage System is 97.96 feet.

Scenario: 36+00 To 37+25-10yr

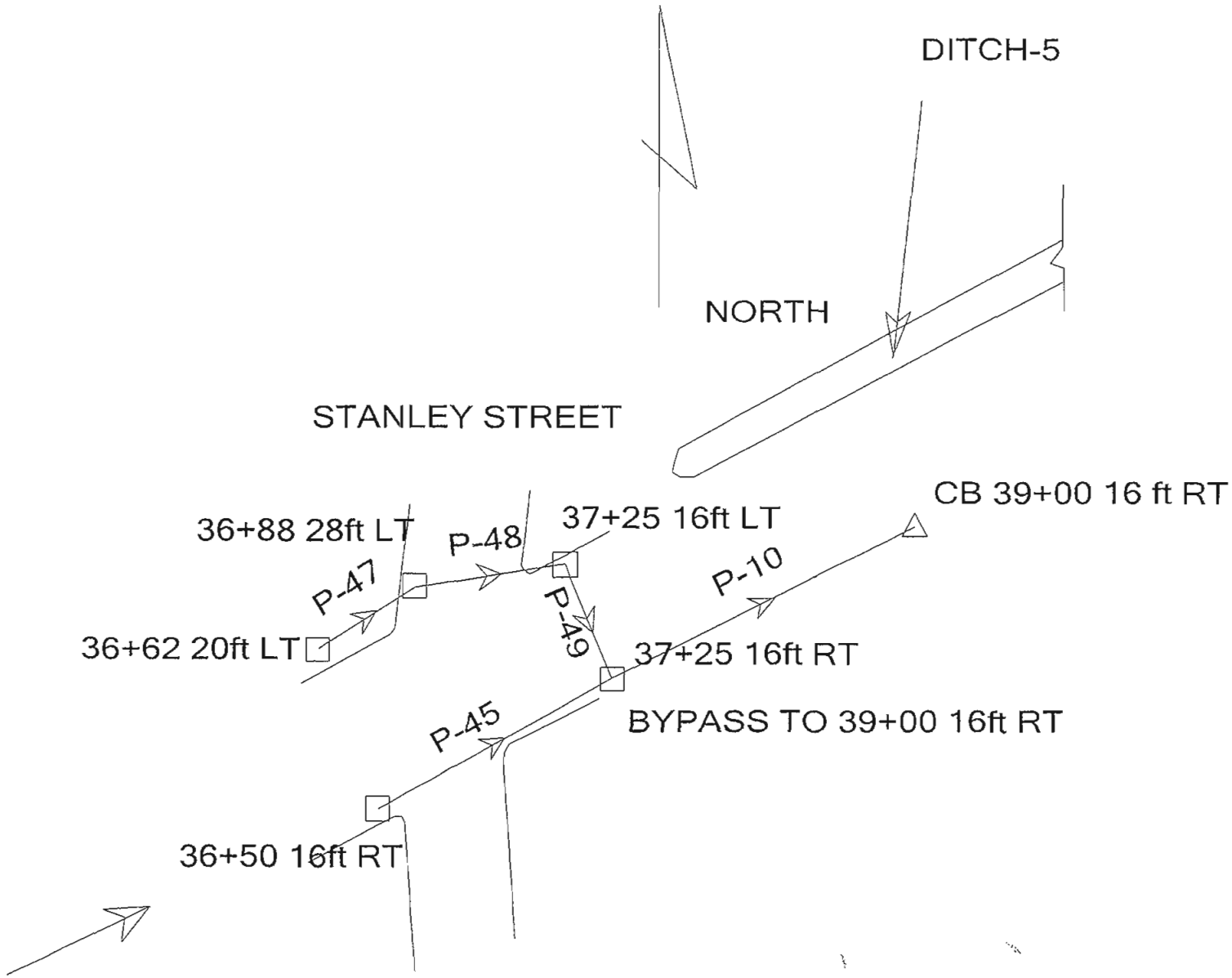

ADD BYPASS FROM BRIDGE DECK

Gutter Flow Analysis (10 yr storm event)

Label	Inlet	Area (acres)	Inlet C	Local Tc (min)	Total Inlet CA (acres)	Total Flow To Inlet (cfs)	Longitudinal Slope (ft/ft)	Gutter Cross Slope (ft/ft)	Gutter Ditch Spread (ft)	Intercepted CA (acres)	Gutter Ditch Depth (ft)	Total Bypassed Flow (cfs)	Bypassed CA (acres)	Clogging Factor (%)
36+50 16ft RT	Combination Type C Single Grate - Grate Type A - P	0.0553	0.90	5.00	0.0498	0.3010	0.041600	0.040	2.29	0.0463	0.09	0.0212	0.0035	0.0
36+62 20ft LT	Grate Type C-L Single Grate - Grate Type A	0.1112	0.69	10.00	0.0767	0.3712		0.040	3.24	0.0767	0.13	0.0000	0.0000	25.0
36+88 28ft LT	Grate Type C-L Single Grate - Grate Type A	0.0553	0.90	5.00	0.0498	0.3010		0.033	3.35	0.0498	0.11	0.0000	0.0000	25.0
37+25 16ft LT	Combination Type C Single Grate - Grate Type A - P	0.0000	0.00	0.00	0.0000	0.0000	0.040000	0.020	0.00	0.0000	0.00	0.0000	0.0000	0.0
37+25 16ft RT	Combination Type C Single Grate - Grate Type A - P	0.0000	0.00	0.00	0.0035	0.0212	0.040000	0.020	1.31	0.0035	0.03	0.0000	0.0000	0.0

Scenario:) To 37+25-10yr

DOT Report

Upstream Node	Downstream Node	Pipe Flow Time (min)	System Flow Time (min)	Upstream Inlet CA (acres)	System CA (acres)	System Intensity (in/hr)	Section Size	Material	Mannings n	Length (ft)	Upstream Invert Elevation (ft)	Downstream Invert Elevation (ft)	Constructed Slope (ft/ft)	Full Capacity (cfs)	Total System Flow (cfs)	Average Velocity (ft/s)
37+25 16ft RT	CB 39+00 16	0.63	10.54	0.0000	0.1763	4.75	15 inch	Concrete	0.013	175.00	154.50	151.00	0.020000	9.1350	0.8432	4.65
36+50 16ft RT	37+25 16ft RT	0.58	5.00	0.0498	0.0463	6.00	12 inch	Concrete	0.013	75.00	154.90	154.50	0.005333	2.6018	0.2798	2.16
36+62 20ft LT	36+88 28ft LT	0.23	10.00	0.0767	0.0767	4.80	12 inch	Concrete	0.013	32.00	155.60	155.44	0.005000	2.5191	0.3712	2.30
36+88 28ft LT	37+25 16ft LT	0.21	10.23	0.0498	0.1265	4.78	12 inch	Concrete	0.013	35.00	155.44	155.25	0.005429	2.6249	0.6091	2.72
37+25 16ft LT	37+25 16ft RT	0.10	10.45	0.0000	0.1265	4.76	12 inch	Concrete	0.013	28.00	155.25	154.50	0.026786	5.8307	0.6064	4.80

Scenario: [illegible]) To 37+25-10yr

Pipe Report

Label	Upstream Node	Downstream Node	Section Size	Length (ft)	Cons Slope (ft/ft)	Total System Flow (cfs)	Full Capacity (cfs)	Average Velocity (ft/s)	Hydraulic Grade Line Out (ft)	Hydraulic Grade Line In (ft)	Upstream Invert Elevation (ft)	Downstream Invert Elevation (ft)	Upstream Ground Elevation (ft)	Downstream Ground Elevation (ft)	Upstream Cover (ft)	Downstream Cover (ft)	Mannings n
P-10	37+25 16ft RT	CB 39+00 16 ft F	15 inch	175.00	0.020000	0.8432	9.1350	4.65	151.45	154.86	154.50	151.00	157.80	155.87	2.05	3.62	0.013
P-45	36+50 16ft RT	37+25 16ft RT	12 inch	75.00	0.005333	0.2798	2.6018	2.16	154.88	155.12	154.90	154.50	159.60	157.80	3.70	2.30	0.013
P-47	36+62 20ft LT	36+88 28ft LT	12 inch	32.00	0.005000	0.3712	2.5191	2.30	155.80	155.86	155.60	155.44	158.00	157.75	1.40	1.31	0.013
P-48	36+88 28ft LT	37+25 16ft LT	12 inch	35.00	0.005429	0.6091	2.6249	2.72	155.62	155.77	155.44	155.25	157.75	157.80	1.31	1.55	0.013
P-49	37+25 16ft LT	37+25 16ft RT	12 inch	28.00	0.026786	0.6064	5.8307	4.80	154.89	155.57	155.25	154.50	157.80	157.80	1.55	2.30	0.013

© Bentley Systems, Inc. Haestad Methods Solution Center Watertown, CT 06795 USA +1-203-755-1666

Profile: Profile - 1

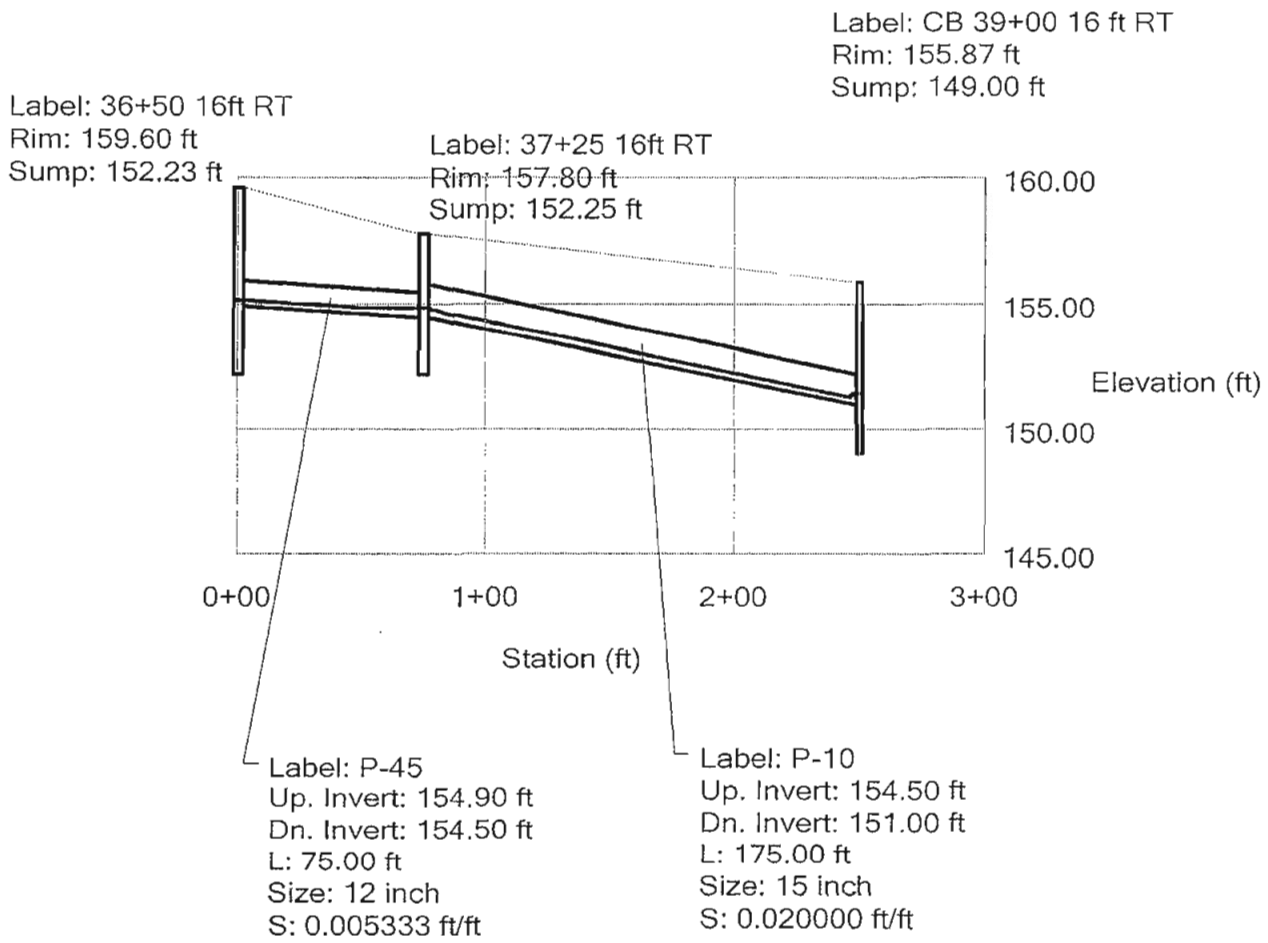

Profile: Profile - 2

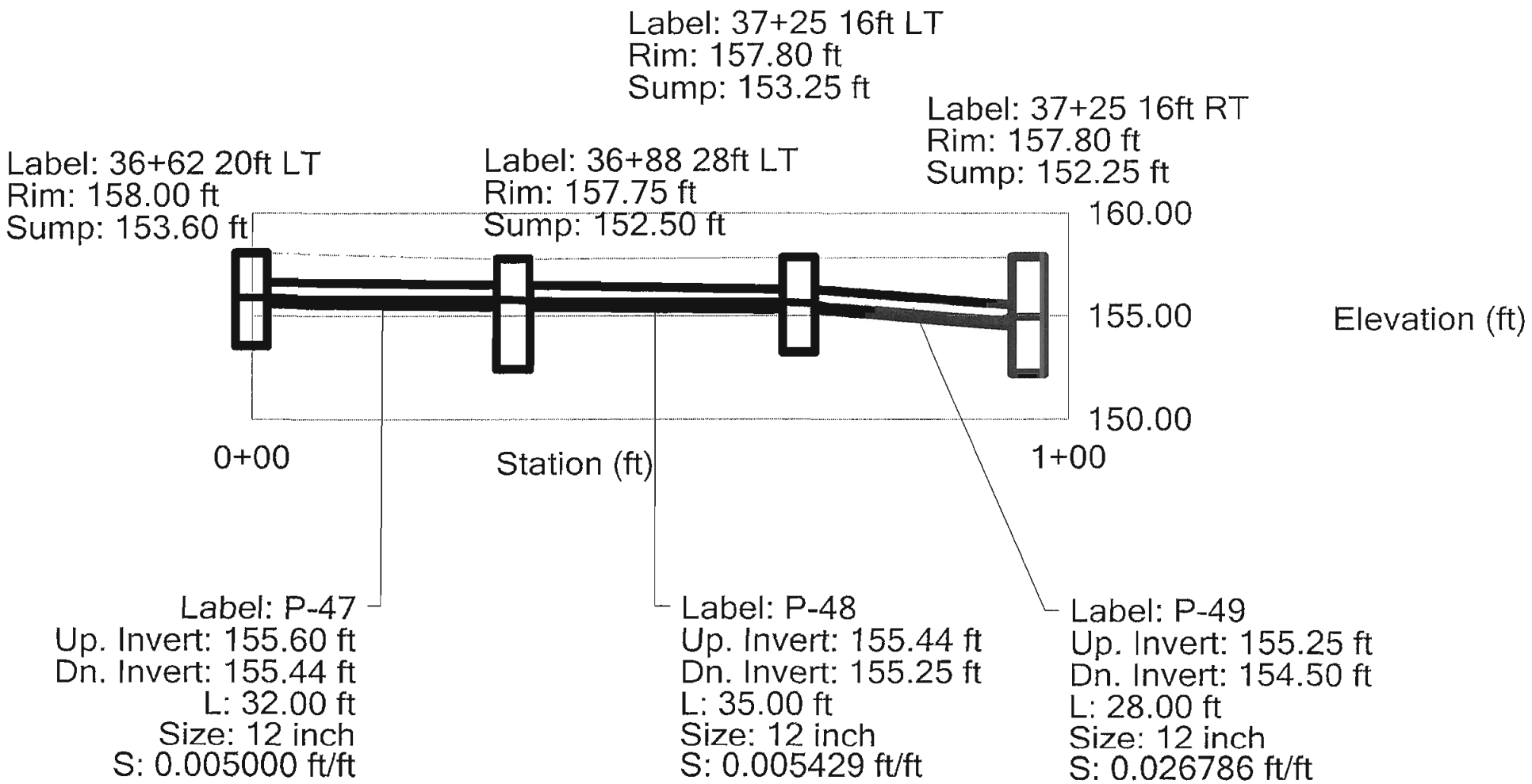

Scenario: 37+25 To 62+50-10yr

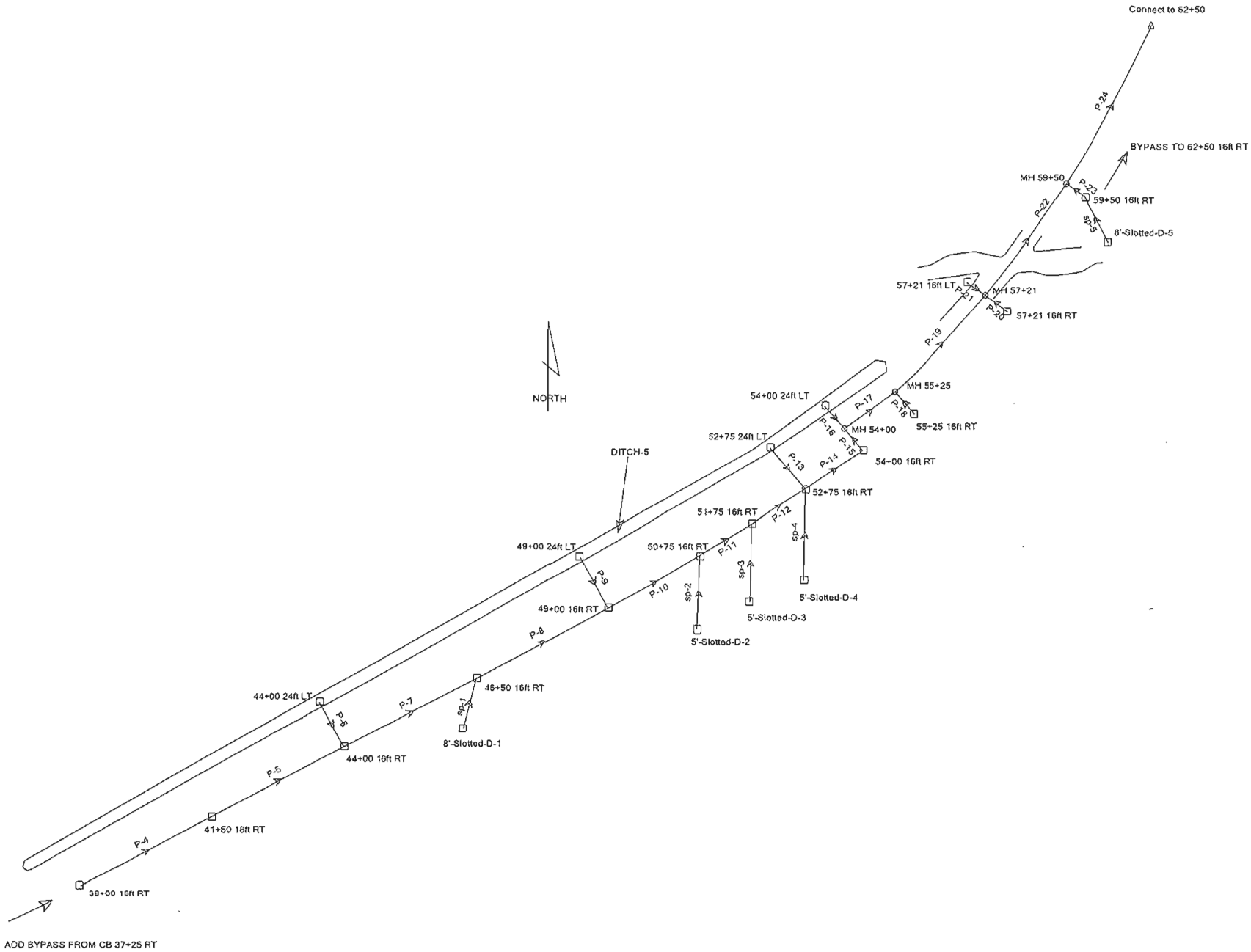

Title: BUSWAY
p:\...\final design\stormcad\sta-3715-5950.stm
07/28/10 10:35:07 AM

URS CorporationRocky Hill
© Bentley Systems, Inc. Haestad Methods Solution Center Watertown, CT 06795 USA +1-203-755-1666

Project Engineer: Li Gao
StormCAD v5.6 [05.06.014.00]
Page 1 of 1

Scenario: ; To 62+50-10yr

Gutter Flow Analysis (10 yr storm event)

Label	Inlet	Area (acres)	Inlet C	Local Tc (min)	Total Inlet CA (acres)	Total Flow To Inlet (cfs)	Longitudinal Slope (ft/ft)	Gutter Cross Slope (ft/ft)	Gutter Ditch Spread (ft)	Intercepted CA (acres)	Gutter Ditch Depth (ft)	Total Bypassed Flow (cfs)	Bypassed CA (acres)	Clogging Factor (%)
5'-Slotted-D-2	Slot Slotted Drain-5'	0.0000	0.00	5.00	0.0000	0.1000	0.005000	0.026	2.94	0.0000	0.08	0.0000	0.0000	
5'-Slotted-D-3	Slot Slotted Drain-5'	0.0000	0.00	5.00	0.0000	0.1000	0.005000	0.026	2.94	0.0000	0.08	0.0000	0.0000	
5'-Slotted-D-4	Slot Slotted Drain-5'	0.0000	0.00	5.00	0.0000	0.1000	0.005000	0.026	2.94	0.0000	0.08	0.0000	0.0000	
8'-Slotted-D-1	Slot Slotted Drain-8'	0.0000	0.00	5.00	0.0000	1.0000	0.005000	0.040	6.58	0.0000	0.21	0.0646	0.0000	
8'-Slotted-D-5	Slot Slotted Drain-8'	0.0000	0.00	5.00	0.0000	0.3000	0.005000	0.040	3.39	0.0000	0.14	0.0000	0.0000	
39+00 16ft RT	Combination Type C Single Grate - Grate Type A - P	0.1456	0.90	5.00	0.1310	0.7925	0.006800	0.040	5.21	0.0959	0.18	0.2122	0.0351	0.0
41+50 16ft RT	Combination Type C Single Grate - Grate Type A - P	0.1623	0.90	5.00	0.1812	1.0957	0.006800	0.040	6.35	0.1250	0.21	0.3397	0.0562	0.0
44+00 16ft RT	Combination Type C Single Grate - Grate Type A - P	0.1623	0.90	5.00	0.2022	1.2231	0.006800	0.040	6.75	0.1366	0.22	0.3971	0.0657	0.0
44+00 24ft LT	Grate Type C-L Single Grate - Grate Type A	0.5554	0.63	10.00	0.3499	1.6930	0.007000	0.330	1.83	0.3495	0.61	0.0022	0.0005	25.0
46+50 16ft RT	Combination Type C Single Grate - Grate Type A - P	0.0000	0.00	5.00	0.0657	1.0398	0.005000	0.040	6.72	0.0464	0.21	0.3044	0.0192	0.0
49+00 16ft RT	Combination Type C Single Grate - Grate Type A - P	0.1831	0.90	5.00	0.1840	1.3011		0.040	3.99	0.1840	0.16	0.0000	0.0000	0.0
49+00 24ft LT	Grate Type C-L Single Grate - Grate Type A	0.4149	0.62	10.00	0.2577	1.2468	0.007000	0.330	1.30	0.2577	0.43	0.0000	0.0000	25.0
50+75 16ft RT	Combination Type C Single Grate - Grate Type A - P	0.0000	0.00	5.00	0.0000	0.1260	0.005000	0.026	3.20	0.0000	0.08	0.0091	0.0000	0.0
51+75 16ft RT	Combination Type C Single Grate - Grate Type A - P	0.0000	0.00	5.00	0.0000	0.1311	0.005000	0.026	3.25	0.0000	0.08	0.0099	0.0000	0.0
52+75 16ft RT	Combination Type C Single Grate - Grate Type A - P	0.0000	0.00	5.00	0.0000	0.1120	0.005000	0.026	3.07	0.0000	0.08	0.0071	0.0000	0.0
52+75 24ft LT	Grate Type C-L Single Grate - Grate Type A	0.6735	0.71	10.00	0.4782	2.3236	0.050000	0.330	1.14	0.2234	0.38	1.2381	0.2548	25.0
54+00 16ft RT	Combination Type C Single Grate - Grate Type A - P	0.0462	0.90	5.00	0.0416	0.2586	0.005000	0.030	3.84	0.0367	0.12	0.0301	0.0048	0.0
54+00 24ft LT	Grate Type C-L Double Grate - Type II - Grate Type	0.4559	0.76	10.00	0.6013	2.9146		0.330	2.05	0.6013	0.68	0.0000	0.0000	25.0
55+25 16ft RT	Combination Type C Single Grate - Grate Type A - P	0.0487	0.90	5.00	0.0487	0.2952	0.005000	0.040	3.37	0.0444	0.13	0.0260	0.0043	0.0
57+21 16ft LT	Combination Type C Single Grate - Grate Type A - P	0.1837	0.90	5.00	0.1653	0.9999	0.005000	0.040	5.94	0.1232	0.21	0.2546	0.0421	0.0
57+21 16ft RT	Combination Type C Single Grate - Grate Type A - P	0.0753	0.90	5.00	0.0721	0.4359	0.005000	0.040	3.90	0.0630	0.16	0.0545	0.0090	0.0
59+50 16ft RT	Combination Type C Single Grate - Grate Type A - P	0.0000	0.00	5.00	0.0000	0.1380	0.009100	0.040	2.26	0.0000	0.09	0.0039	0.0000	0.0

Scenario: [illegible] To 62+50-10yr

DOT Report

Upstream Node	Downstream Node	Pipe Flow Time (min)	System Flow Time (min)	Upstream Inlet CA (acres)	System CA (acres)	System Intensity (in/hr)	Section Size	Material	Mannings n	Length (ft)	Upstream Invert Elevation (ft)	Downstream Invert Elevation (ft)	Constructed Slope (ft/ft)	Full Capacity (cfs)	Total System Flow (cfs)	Average Velocity (ft/s)
39+00 16ft RT	41+50 16ft RT	1.19	11.20	0.1310	0.0959	4.66	15 inch	Concrete	0.013	245.00	151.00	149.50	0.006122	5.0543	1.2797	3.44
41+50 16ft RT	44+00 16ft RT	1.17	12.39	0.1461	0.2209	4.42	15 inch	Concrete	0.013	246.00	149.50	148.27	0.005000	4.5675	1.8139	3.51
44+00 24ft LT	44+00 16ft RT	0.15	10.00	0.3499	0.3495	4.80	12 inch	Concrete	0.013	36.00	148.80	148.52	0.007778	3.1419	1.6908	4.07
44+00 16ft RT	46+50 16ft RT	0.97	13.56	0.1461	0.7070	4.24	18 inch	Concrete	0.013	246.00	148.02	146.79	0.005000	7.4273	3.8536	4.24
46+50 16ft RT	49+00 16ft RT	0.90	14.52	0.0000	0.7534	4.10	18 inch	Concrete	0.013	246.00	146.79	145.56	0.005000	7.4273	5.3289	4.57
49+00 24ft LT	49+00 16ft RT	0.15	10.00	0.2572	0.2577	4.80	12 inch	Concrete	0.013	35.00	146.35	146.06	0.008286	3.2429	1.2468	3.86
49+00 16ft RT	50+75 16ft RT	0.60	15.42	0.1648	1.1951	3.96	18 inch	Concrete	0.013	172.00	145.56	144.70	0.005000	7.4273	7.1750	4.79
50+75 16ft RT	51+75 16ft RT	0.34	16.02	0.0000	1.1951	3.90	18 inch	Concrete	0.013	97.00	144.70	144.21	0.005052	7.4655	7.3197	4.82
51+75 16ft RT	52+75 16ft RT	0.34	16.36	0.0000	1.1951	3.86	18 inch	Concrete	0.013	97.00	144.21	143.72	0.005052	7.4655	7.5005	4.82
52+75 24ft LT	52+75 16ft RT	0.14	10.00	0.4782	0.2234	4.80	12 inch	Concrete	0.013	34.00	144.58	144.22	0.010588	3.6659	1.0854	4.07
52+75 16ft RT	54+00 16ft RT	0.35	16.69	0.0000	1.4185	3.83	18 inch	Concrete	0.013	125.00	143.72	142.72	0.008000	9.3949	8.5322	6.02
54+00 16ft RT	MH 54+00	0.02	17.04	0.0416	1.4552	3.80	18 inch	Concrete	0.013	12.00	142.72	142.47	0.020833	15.1609	8.6350	8.86
54+00 24ft LT	MH 54+00	0.07	10.00	0.3465	0.6013	4.80	12 inch	Concrete	0.013	24.00	142.80	142.50	0.012500	3.9831	2.9146	5.54
MH 54+00	MH 55+25	0.38	17.06	N/A	2.0565	3.80	24 inch	Concrete	0.013	125.00	141.98	141.35	0.005040	16.0594	10.9435	5.50
55+25 16ft RT	MH 55+25	0.06	5.00	0.0438	0.0444	6.00	12 inch	Concrete	0.013	12.00	141.85	141.60	0.020833	5.1422	0.2691	3.46
MH 55+25	MH 57+21	0.58	17.44	N/A	2.1009	3.80	24 inch	Concrete	0.013	193.00	141.35	140.36	0.005130	16.2015	11.1142	5.56
57+21 16ft RT	MH 57+21	0.06	5.00	0.0678	0.0630	6.00	12 inch	Concrete	0.013	12.00	141.50	141.36	0.011667	3.8481	0.3814	3.12
57+21 16ft LT	MH 57+21	0.06	5.00	0.1653	0.1232	6.00	12 inch	Concrete	0.013	12.00	141.45	141.36	0.007500	3.0853	0.7453	3.23

DOT Report

Upstream Node	Downstream Node	Pipe Flow Time (min)	System Flow Time (min)	Upstream Inlet CA (acres)	System CA (acres)	System Intensity (in/hr)	Section Size	Material	Mannings n	Length (ft)	Upstream Invert Elevation (ft)	Downstream Invert Elevation (ft)	Constructed Slope (ft/ft)	Full Capacity (cfs)	Total System Flow (cfs)	Average Velocity (ft/s)
MH 57+21	MH 59+50	0.69	18.02	N/A	2.2872	3.80	24 inch	Concrete	0.013	225.00	140.36	139.30	0.004711	15.5266	11.8238	5.44
59+50 16ft RT	MH 59+50	0.03	5.01	0.0000	0.0000	0.00	12 inch	Concrete	0.013	12.00	141.26	140.30	0.080000	10.0766	0.4341	6.40
MH 59+50	Connect to 62	0.76	18.71	N/A	2.2872	3.73	24 inch	Concrete	0.013	296.00	139.30	137.11	0.007399	19.4577	12.0990	6.53
8'-Slotted-D-1	46+50 16ft RT	0.01	5.00	0.0000	0.0000	0.00	12 inch	Concrete	0.013	3.00	149.33	149.23	0.033333	6.5044	0.9354	5.88
5'-Slotted-D-2	50+75 16ft RT	0.02	5.00	0.0000	0.0000	0.00	12 inch	Concrete	0.013	3.00	147.66	147.56	0.033333	6.5044	0.1000	3.03
5'-Slotted-D-3	51+75 16ft RT	0.02	5.00	0.0000	0.0000	0.00	12 inch	Concrete	0.013	3.00	147.17	147.07	0.033333	6.5044	0.1000	3.03
5'-Slotted-D-4	52+75 16ft RT	0.02	5.00	0.0000	0.0000	0.00	12 inch	Concrete	0.013	3.00	146.66	146.56	0.033333	6.5044	0.1000	3.03
8'-Slotted-D-5	59+50 16ft RT	0.01	5.00	0.0000	0.0000	0.00	12 inch	Concrete	0.013	3.00	142.80	142.70	0.033333	6.5044	0.3000	4.21

Scenario: ; To 62+50-10yr

Pipe Report

Label	Upstream Node	Downstream Node	Section Size	Length (ft)	Cons Slope (ft/ft)	Total System Flow (cfs)	Full Capacity (cfs)	Average Velocity (ft/s)	Hydraulic Grade Line Out (ft)	Hydraulic Grade Line In (ft)	Upstream Invert Elevation (ft)	Downstream Invert Elevation (ft)	Upstream Ground Elevation (ft)	Downstream Ground Elevation (ft)	Upstream Cover (ft)	Downstream Cover (ft)	Mannings n
P-4	39+00 16ft RT	41+50 16ft RT	15 inch	245.00	0.006122	1.2797	5.0543	3.44	150.07	151.45	151.00	149.50	155.87	154.13	3.62	3.38	0.013
P-5	41+50 16ft RT	44+00 16ft RT	15 inch	246.00	0.005000	1.8139	4.5675	3.51	148.83	150.05	149.50	148.27	154.13	152.42	3.38	2.90	0.013
P-6	44+00 24ft LT	44+00 16ft RT	12 inch	36.00	0.007778	1.6908	3.1419	4.07	149.04	149.35	148.80	148.52	151.08	152.42	1.28	2.90	0.013
P-7	44+00 16ft RT	46+50 16ft RT	18 inch	246.00	0.005000	3.8536	7.4273	4.24	147.76	148.79	148.02	146.79	152.42	150.73	2.90	2.44	0.013
P-8	46+50 16ft RT	49+00 16ft RT	18 inch	246.00	0.005000	5.3289	7.4273	4.57	146.81	147.73	146.79	145.56	150.73	149.30	2.44	2.24	0.013
P-9	49+00 24ft LT	49+00 16ft RT	12 inch	35.00	0.008286	1.2468	3.2429	3.86	146.78	146.82	146.35	146.06	148.10	149.30	0.75	2.24	0.013
P-10	49+00 16ft RT	50+75 16ft RT	18 inch	172.00	0.005000	7.1750	7.4273	4.79	145.97	146.75	145.56	144.70	149.30	149.16	2.24	2.96	0.013
P-11	50+75 16ft RT	51+75 16ft RT	18 inch	97.00	0.005052	7.3197	7.4655	4.82	145.49	145.92	144.70	144.21	149.16	148.67	2.96	2.96	0.013
P-12	51+75 16ft RT	52+75 16ft RT	18 inch	97.00	0.005052	7.5005	7.4655	4.82	144.93	145.44	144.21	143.72	148.67	148.16	2.96	2.94	0.013
P-13	52+75 24ft LT	52+75 16ft RT	12 inch	34.00	0.010588	1.0854	3.6659	4.07	144.89	145.02	144.58	144.22	145.95	148.16	0.37	2.94	0.013
P-14	52+75 16ft RT	54+00 16ft RT	18 inch	125.00	0.008000	8.5322	9.3949	6.02	144.24	144.85	143.72	142.72	148.16	147.52	2.94	3.30	0.013
P-15	54+00 16ft RT	MH 54+00	18 inch	12.00	0.020833	8.6350	15.1609	8.86	143.40	143.86	142.72	142.47	147.52	147.10	3.30	3.13	0.013
P-16	54+00 24ft LT	MH 54+00	12 inch	24.00	0.012500	2.9146	3.9831	5.54	143.14	143.53	142.80	142.50	145.33	147.10	1.53	3.60	0.013
P-17	MH 54+00	MH 55+25	24 inch	125.00	0.005040	10.9435	16.0594	5.50	142.64	143.19	141.98	141.35	147.10	146.42	3.12	3.07	0.013
P-18	55+25 16ft RT	MH 55+25	12 inch	12.00	0.020833	0.2691	5.1422	3.46	142.57	142.57	141.85	141.60	146.65	146.42	3.80	3.82	0.013
P-19	MH 55+25	MH 57+21	24 inch	193.00	0.005130	11.1142	16.2015	5.56	141.72	142.57	141.35	140.36	146.42	145.05	3.07	2.69	0.013
P-20	57+21 16ft RT	MH 57+21	12 inch	12.00	0.011667	0.3814	3.8481	3.12	141.94	141.94	141.50	141.36	145.67	145.05	3.17	2.69	0.013
P-21	57+21 16ft LT	MH 57+21	12 inch	12.00	0.007500	0.7453	3.0853	3.23	141.94	141.94	141.45	141.36	144.65	145.05	2.20	2.69	0.013
P-22	MH 57+21	MH 59+50	24 inch	225.00	0.004711	11.8238	15.5266	5.44	140.60	141.67	140.36	139.30	145.05	144.15	2.69	2.85	0.013
P-23	59+50 16ft RT	MH 59+50	12 inch	12.00	0.080000	0.4341	10.0766	6.40	140.86	141.53	141.26	140.30	144.30	144.15	2.04	2.85	0.013
P-24	MH 59+50	Connect to 62+5	24 inch	296.00	0.007399	12.0990	19.4577	6.53	139.11	140.55	139.30	137.11	144.15	141.40	2.85	2.29	0.013
sp-1	8'-Slotted-D-1	46+50 16ft RT	12 inch	3.00	0.033333	0.9354	6.5044	5.88	149.54	149.74	149.33	149.23	150.73	150.73	0.40	0.50	0.013
sp-2	5'-Slotted-D-2	50+75 16ft RT	12 inch	3.00	0.033333	0.1000	6.5044	3.03	147.65	147.79	147.66	147.56	149.16	149.16	0.50	0.60	0.013
sp-3	5'-Slotted-D-3	51+75 16ft RT	12 inch	3.00	0.033333	0.1000	6.5044	3.03	147.16	147.30	147.17	147.07	148.67	148.67	0.50	0.60	0.013
sp-4	5'-Slotted-D-4	52+75 16ft RT	12 inch	3.00	0.033333	0.1000	6.5044	3.03	146.65	146.79	146.66	146.56	148.16	148.16	0.50	0.60	0.013
sp-5	8'-Slotted-D-5	59+50 16ft RT	12 inch	3.00	0.033333	0.3000	6.5044	4.21	142.86	143.03	142.80	142.70	144.30	144.30	0.50	0.60	0.013

Profile
Scenario: 37+25 To 62+50-10yr

Profile: Profile - 1 Scenario: 37+25 To 62+50-10yr

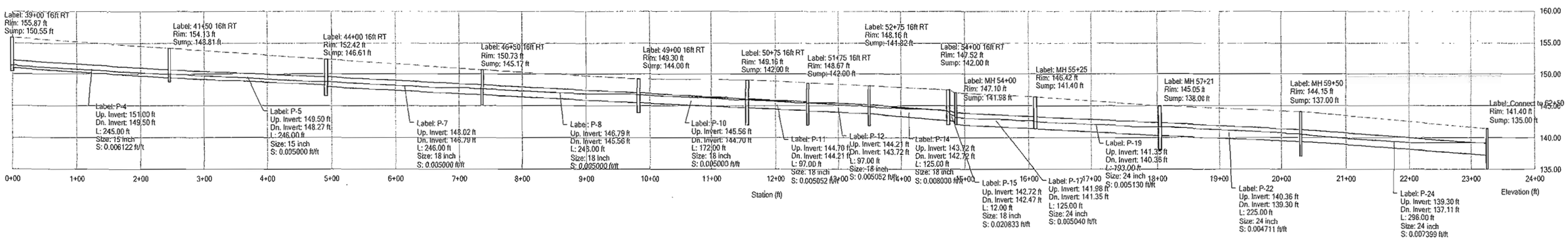

Profile: Profile - 2

Scenario: 37+25 To 62+50-10yr

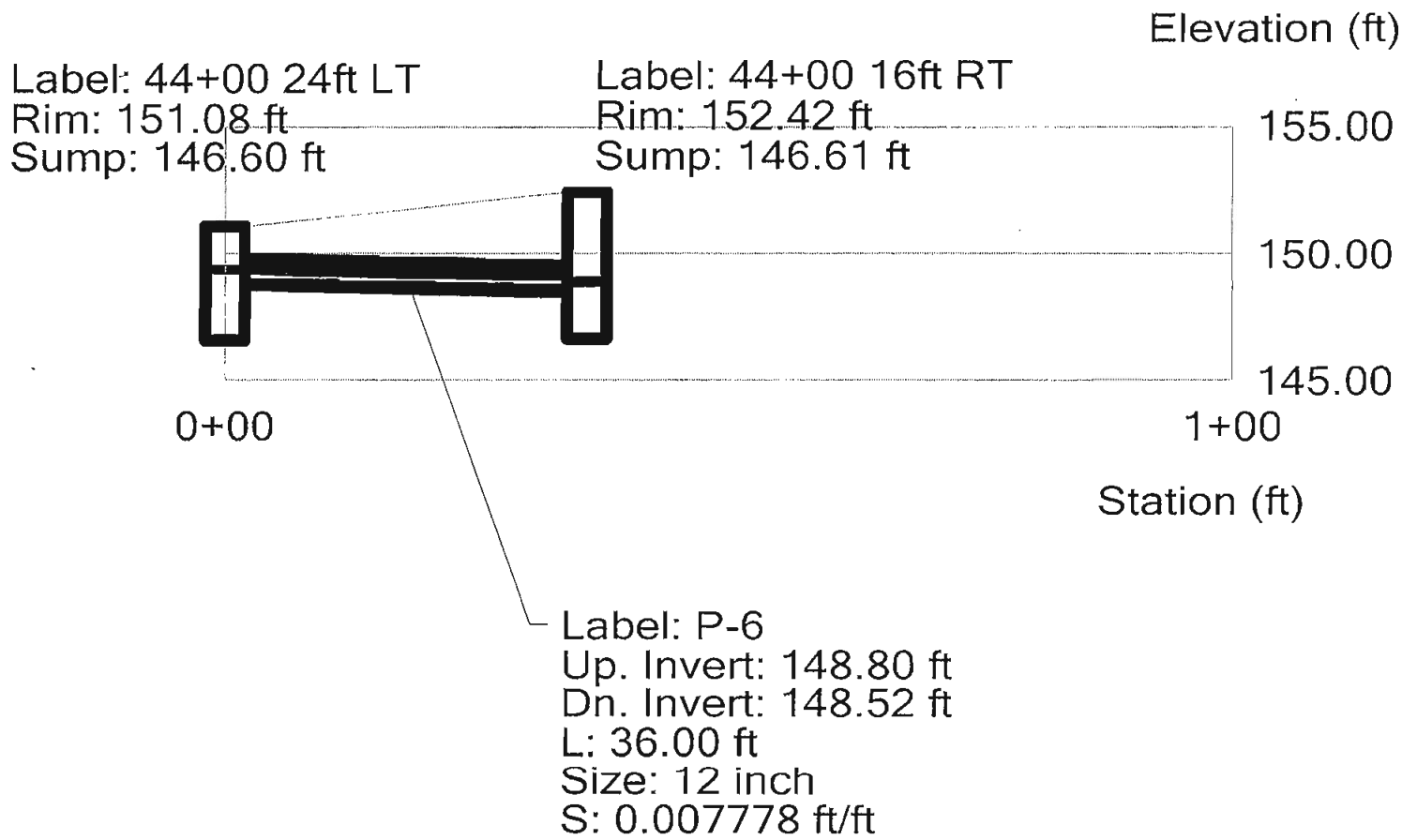

Profile: Profile - 3

Scenario: 37+25 To 62+50-10yr

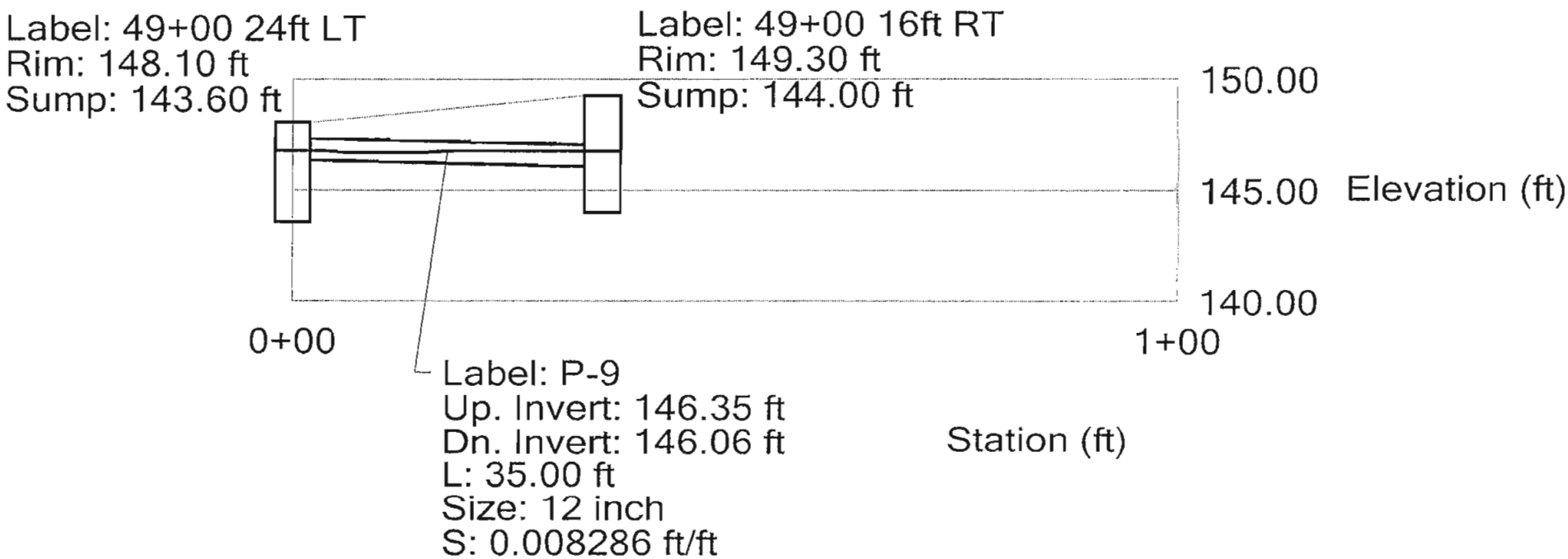

Profile: Profile - 4

Scenario: 37+25 To 62+50-10yr

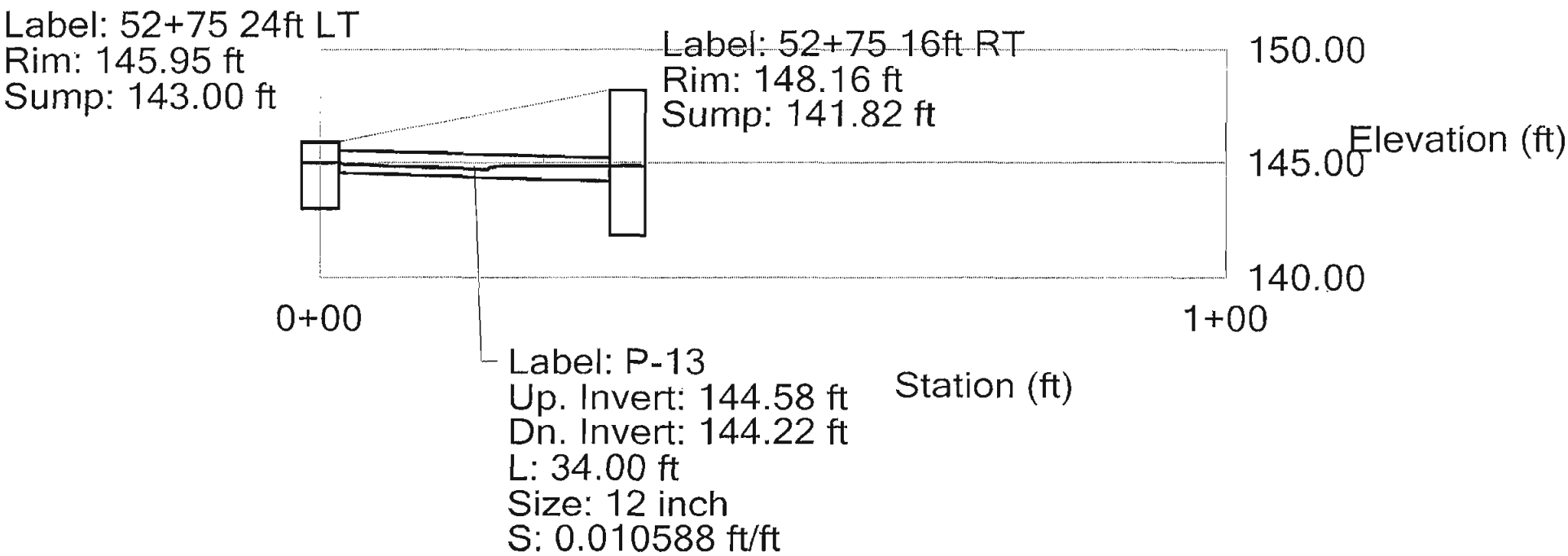

Profile: Profile - 5

Scenario: 37+25 To 62+50-10yr

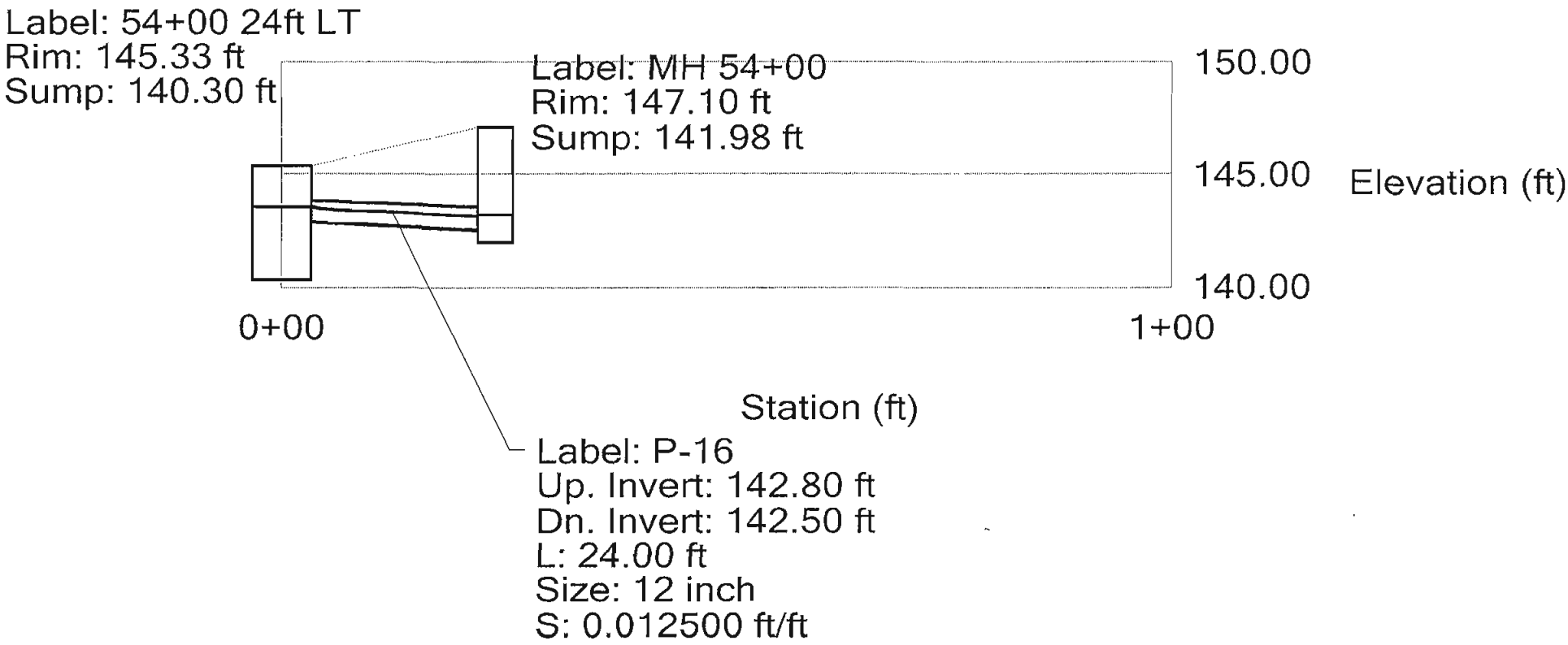

Profile: Profile - 6

Scenario: 37+25 To 62+50-10yr

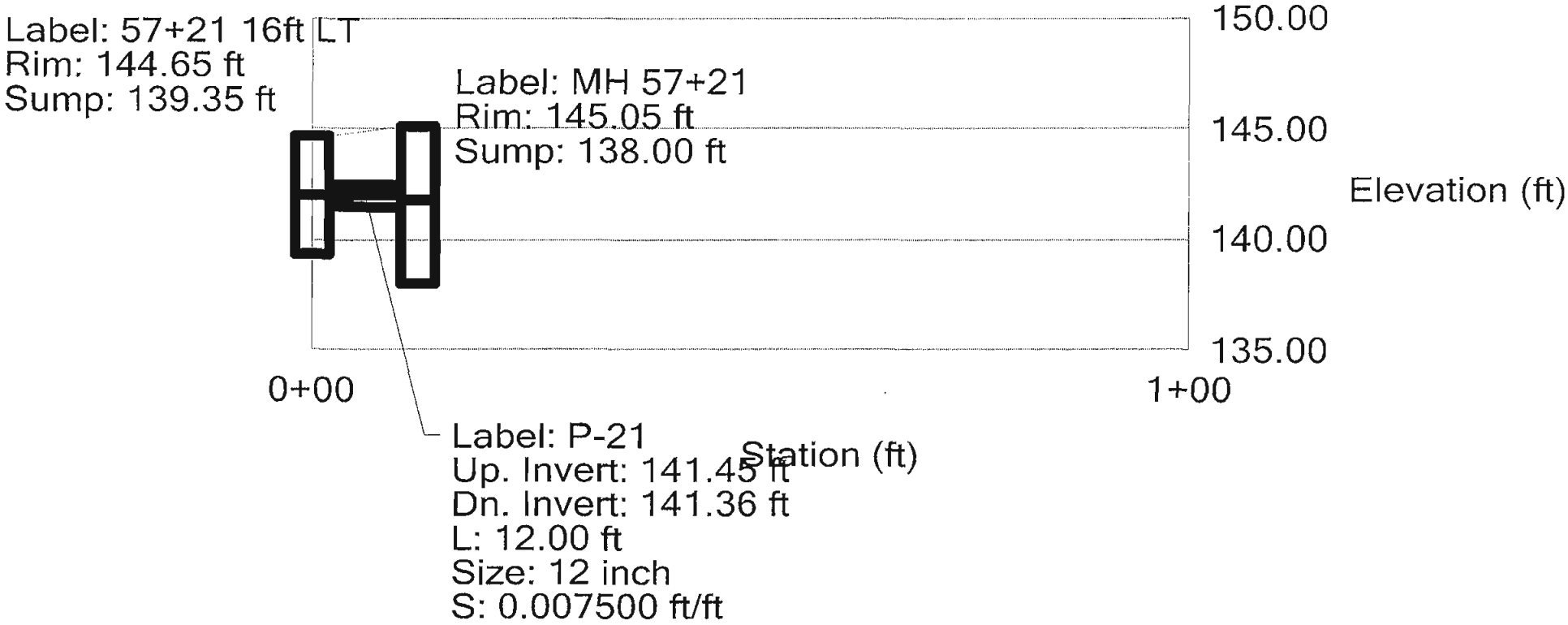

Profile: Profile - 7

Scenario: 37+25 To 62+50-10yr

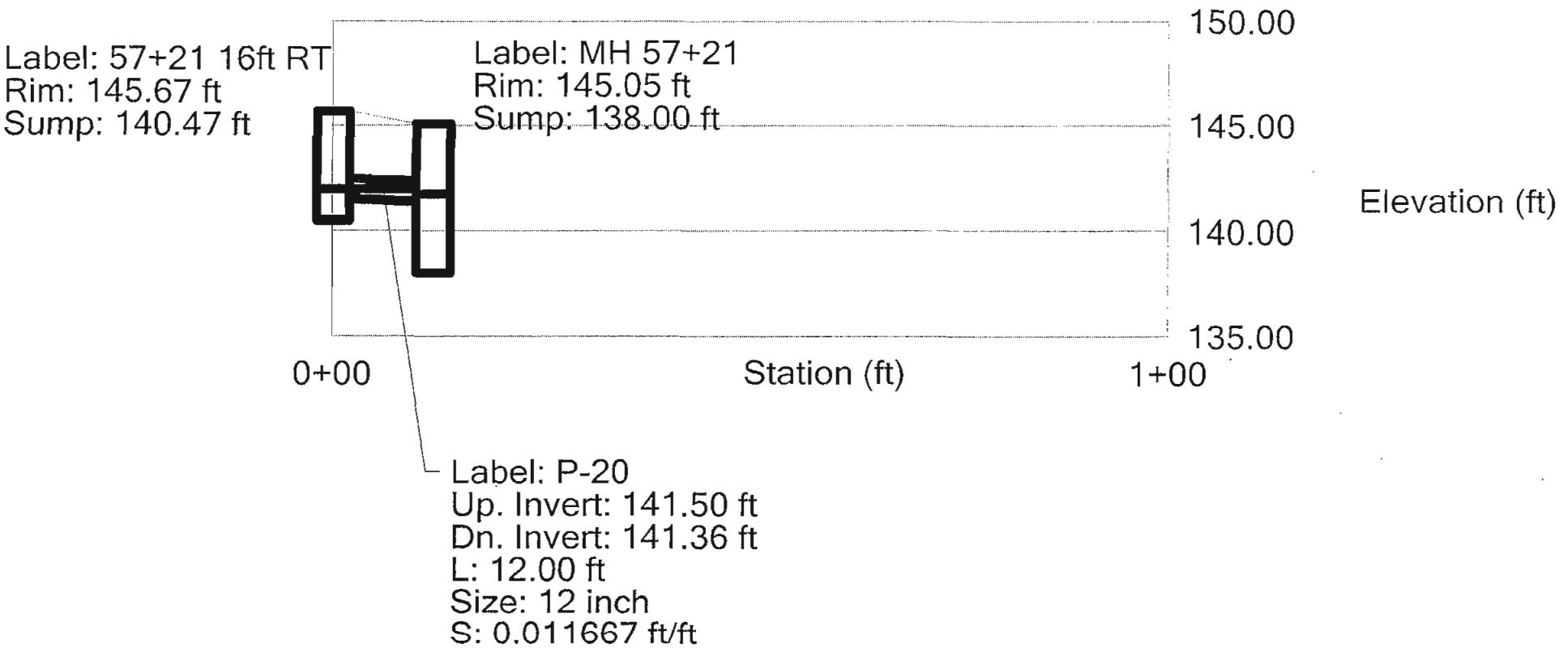

Profile: Profile - 8

Scenario: 37+25 To 62+50-10yr

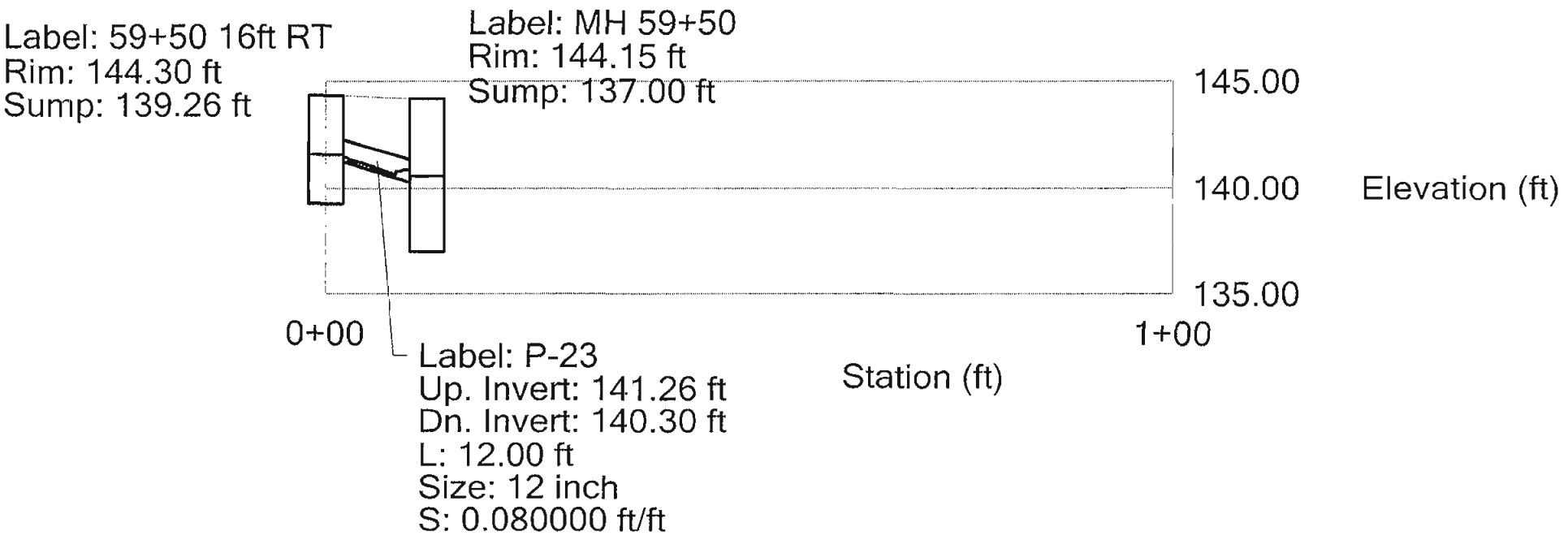

Profile: Profile - 9

Scenario: 37+25 To 62+50-10yr

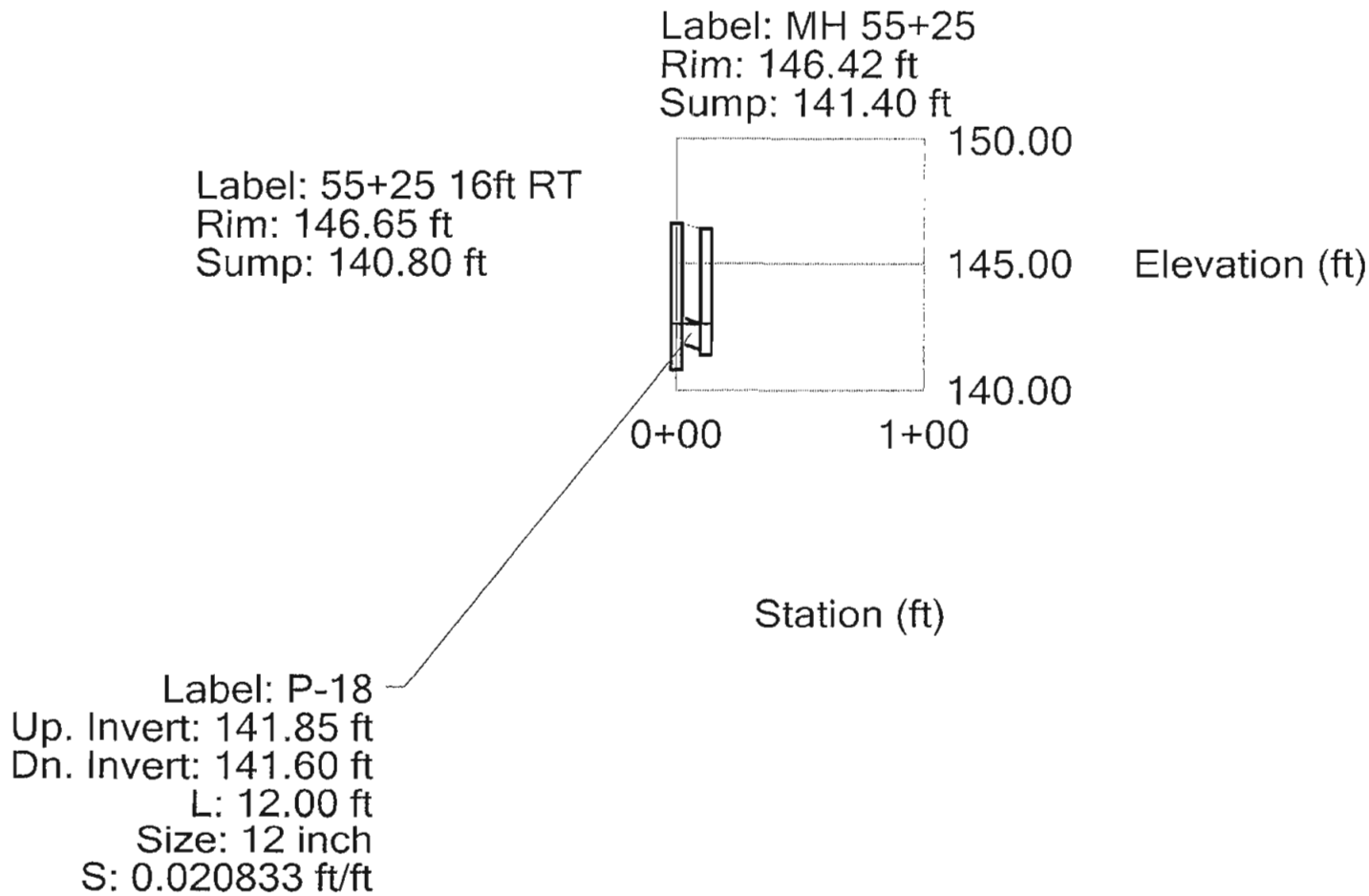

Scenario: 59+50 To 69+00-10yr

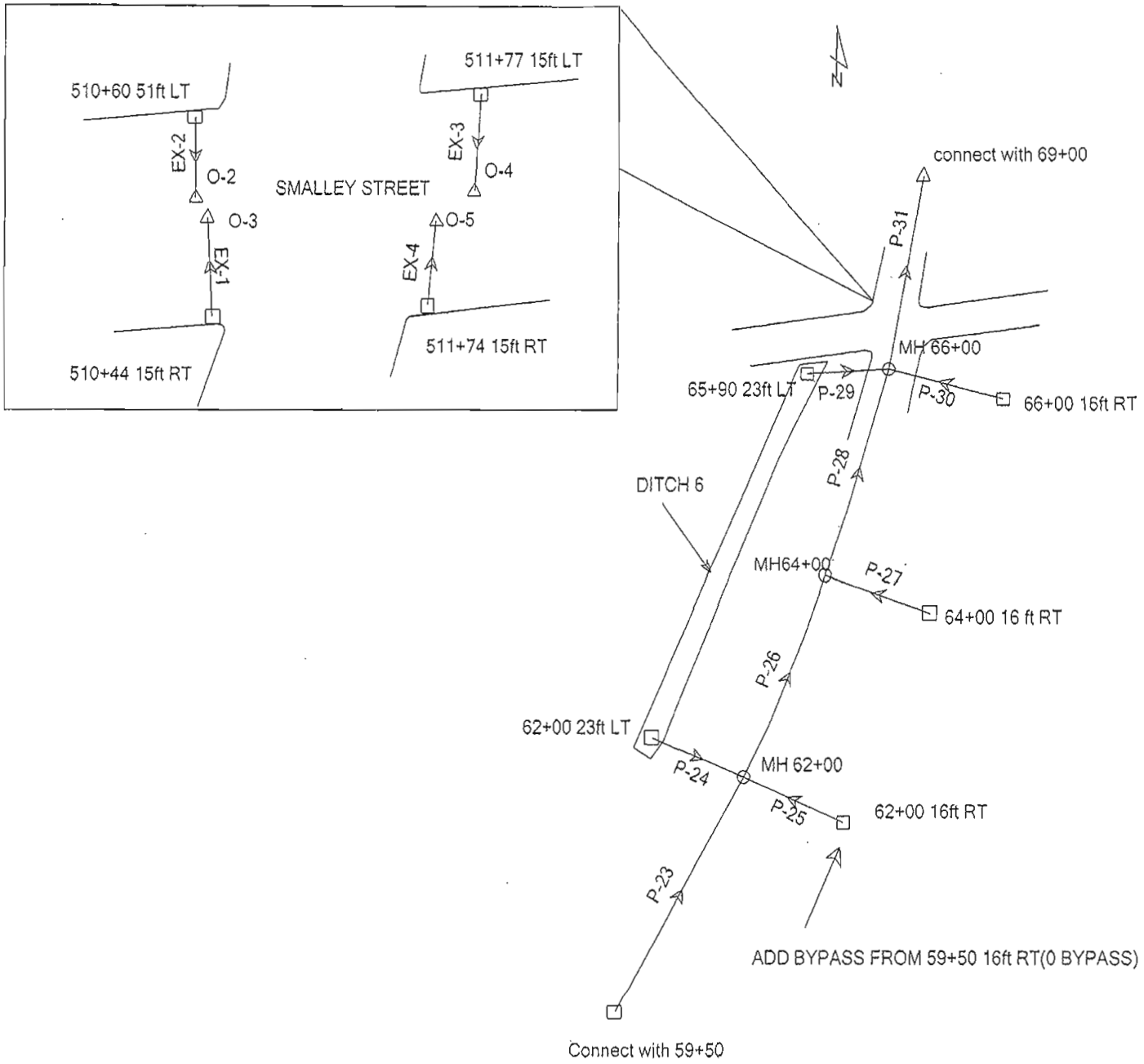

Scenario: [illegible] To 69+00-10yr

Gutter Flow Analysis (10 yr storm event)

Label	Inlet	Area (acres)	Inlet C	Local Tc (min)	Total Inlet CA (acres)	Total Longitudinal Flow To Inlet (cfs)	Gutter Slope (ft/ft)	Gutter Cross Slope (ft/ft)	Gutter Ditch Spread (ft)	Intercepted CA (acres)	Gutter Ditch Depth (ft)	Total Bypassed Flow (cfs)	Bypassed CA (acres)	Clogging Factor (%)
62+00 16ft RT	Combination Type C Single Grate - Grate Type A - P	0.1156	0.90	5.00	0.1040	0.629	009100	0.040	4.00	0.0854	0.16	0.113	0.0186	0.0
62+00 23ft LT	Grate Type C-L Single Grate - Grate Type A	0.4611	0.66	10.00	0.3043	1.472		0.330	1.95	0.3043	0.64	0.000	0.0000	50.0
64+00 16 ft R	Combination Type C Single Grate - Grate Type A - P	0.0602	0.90	5.00	0.0728	0.440	005000	0.040	3.91	0.0636	0.16	0.056	0.0092	0.0
65+90 23ft LT	Grate Type C-L Single Grate - Grate Type A	0.7335	0.51	10.00	0.3741	1.810		0.330	2.06	0.3741	0.68	0.000	0.0000	50.0
66+00 16ft RT	Combination Type C Single Grate - Grate Type A - P	0.0806	0.90	5.00	0.0817	0.494	010600	0.040	3.55	0.0695	0.14	0.074	0.0122	0.0
510+44 15ft F	Combination Type C - Grate Type A - Plain Curb	0.1117	0.90	5.00	0.1005	0.608		0.033	2.74	0.1005	0.09	0.000	0.0000	0.0
510+60 51ft L	Combination Type C - Grate Type A - Plain Curb	0.1247	0.90	5.00	0.1122	0.679		0.033	2.95	0.1122	0.10	0.000	0.0000	0.0
511+74 15ft F	Combination Type C - Grate Type A - Plain Curb	0.0666	0.90	5.00	0.0722	0.436		0.033	2.35	0.0722	0.07	0.000	0.0000	0.0
511+77 15ft L	Combination Type C - Grate Type A - Plain Curb	0.0529	0.90	5.00	0.0476	0.288		0.033	2.05	0.0476	0.05	0.000	0.0000	0.0
Connect with	Combination Type C Single Grate - Grate Type A - P	0.0000	0.00	0.00	0.0000	0.000		0.020	0.00	0.0000	0.00	0.000	0.0000	0.0

Scenario) To 69+00-10yr

DOT Report

Upstream Node	Downstream Node	Pipe Flow Time (min)	System Flow Time (min)	Upstream Inlet CA (acres)	System CA (acres)	System Intensity (in/hr)	Section Size	Material	Mannings n	Length (ft)	Upstream Invert Elevation (ft)	Downstream Invert Elevation (ft)	Constructed Slope (ft/ft)	Full Capacity (cfs)	Total System Flow (cfs)	Average Velocity (ft/s)
510+44 15ft RT	O-3	0.02	5.00	0.1005	0.1005	6.00	12 inch	Concrete	0.013	10.00	134.54	133.50	0.104000	11.489	0.608	7.75
510+60 51ft LT	O-2	0.02	5.00	0.1122	0.1122	6.00	12 inch	Concrete	0.013	10.00	134.33	133.50	0.083000	10.264	0.679	7.40
511+77 15ft LT	O-4	0.03	5.00	0.0476	0.0476	6.00	12 inch	Concrete	0.013	10.00	132.62	132.00	0.062000	8.871	0.288	5.17
511+74 15ft RT	O-5	0.02	5.00	0.0599	0.0722	6.00	12 inch	Concrete	0.013	10.00	134.20	133.00	0.120000	12.341	0.436	7.38
Connect with 59-	MH 62+00	0.61	20.41	0.0000	2.8217	3.56	24 inch	Concrete	0.013	246.00	139.30	137.11	0.008902	21.344	10.123	6.70
62+00 23ft LT	MH 62+00	0.10	10.00	0.3043	0.3043	4.80	12 inch	Concrete	0.013	19.00	138.20	138.11	0.004737	2.452	1.472	3.26
62+00 16ft RT	MH 62+00	0.04	5.00	0.1040	0.0854	6.00	12 inch	Concrete	0.013	12.00	138.53	138.11	0.035000	6.665	0.517	5.04
MH 62+00	MH64+00	0.42	21.02	N/A	3.2114	3.50	24 inch	Concrete	0.013	196.00	137.11	134.73	0.012143	24.927	11.323	7.74
64+00 16 ft RT	MH64+00	0.07	5.00	0.0542	0.0636	6.00	12 inch	Concrete	0.013	12.00	135.86	135.73	0.010833	3.708	0.385	3.05
MH64+00	MH 66+00	0.59	21.44	N/A	3.2751	3.46	24 inch	Concrete	0.013	196.00	134.73	133.75	0.005000	15.996	11.408	5.53
65+90 23ft LT	MH 66+00	0.10	10.00	0.3741	0.3741	4.80	12 inch	Concrete	0.013	19.00	134.83	134.75	0.004211	2.312	1.810	3.26
66+00 16ft RT	MH 66+00	0.04	5.00	0.0725	0.0695	6.00	12 inch	Concrete	0.013	12.00	135.12	134.75	0.030833	6.256	0.420	4.53
MH 66+00	connect with 6	0.87	22.03	N/A	3.7186	3.40	24 inch	Concrete	0.013	297.00	133.75	132.25	0.005051	16.076	12.745	5.68

Pipe Report

Label	Upstream Node	Downstream Node	Section Size	Length (ft)	Cons Slope (ft/ft)	Total System Flow (cfs)	Full Capacity (cfs)	Average Velocity (ft/s)	Hydraulic Grade Line Out (ft)	Hydraulic Grade Line In (ft)	Upstream Invert Elevation (ft)	Downstream Invert Elevation (ft)	Upstream Ground Elevation (ft)	Downstream Ground Elevation (ft)	Upstream Cover (ft)	Downstream Cover (ft)	Mannings n
EX-1	510+44 15ft	O-3	12 inch	10.00	0.104000	0.608	11.489	7.75	134.50	134.86	134.54	133.50	136.75	137.00	1.21	2.50	0.013
EX-2	510+60 51ft	O-2	12 inch	10.00	0.083000	0.679	10.264	7.40	134.50	134.67	134.33	133.50	136.75	137.00	1.42	2.50	0.013
EX-3	511+77 15ft	O-4	12 inch	10.00	0.062000	0.288	8.871	5.17	133.00	132.98	132.62	132.00	137.85	137.00	4.23	4.00	0.013
EX-4	511+74 15ft	O-5	12 inch	10.00	0.120000	0.436	12.341	7.38	134.00	134.47	134.20	133.00	137.95	137.00	2.75	3.00	0.013
P-23	Connect with	MH 62+00	24 inch	246.00	0.008902	10.123	21.344	6.70	138.37	140.44	139.30	137.11	144.14	141.58	2.84	2.47	0.013
P-24	62+00 23ft L	MH 62+00	12 inch	19.00	0.004737	1.472	2.452	3.26	138.62	138.76	138.20	138.11	139.40	141.58	0.20	2.47	0.013
P-25	62+00 16ft R	MH 62+00	12 inch	12.00	0.035000	0.517	6.665	5.04	138.61	138.83	138.53	138.11	142.05	141.58	2.52	2.47	0.013
P-26	MH 62+00	MH64+00	24 inch	196.00	0.012143	11.323	24.927	7.74	136.01	138.32	137.11	134.73	141.58	139.89	2.47	3.16	0.013
P-27	64+00 16 ft R	MH64+00	12 inch	12.00	0.010833	0.385	3.708	3.05	136.26	136.25	135.86	135.73	140.07	139.89	3.21	3.16	0.013
P-28	MH64+00	MH 66+00	24 inch	196.00	0.005000	11.408	15.996	5.53	135.16	135.98	134.73	133.75	139.89	138.05	3.16	2.30	0.013
P-29	65+90 23ft L	MH 66+00	12 inch	19.00	0.004211	1.810	2.312	3.26	135.39	135.49	134.83	134.75	136.72	138.05	0.89	2.30	0.013
P-30	66+00 16ft R	MH 66+00	12 inch	12.00	0.030833	0.420	6.256	4.53	135.40	135.39	135.12	134.75	138.27	138.05	2.15	2.30	0.013
P-31	MH 66+00	connect with 6	24 inch	297.00	0.005051	12.745	16.076	5.68	134.25	135.09	133.75	132.25	138.05	136.54	2.30	2.29	0.013

Profile: Profile - 1

Scenario: 59+50 To 69+00-10yr

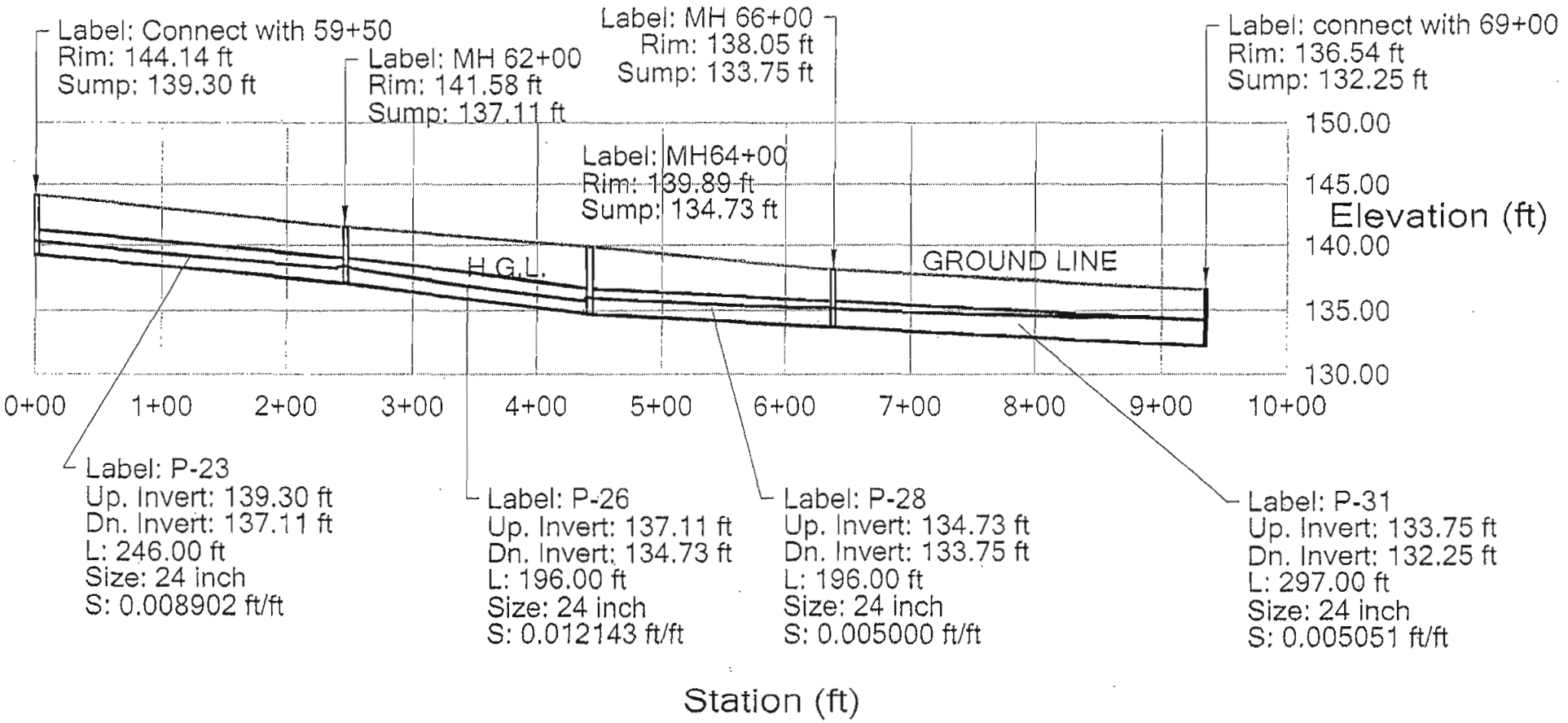

Profile: Profile - 2

Scenario: 59+50 To 69+00-10yr

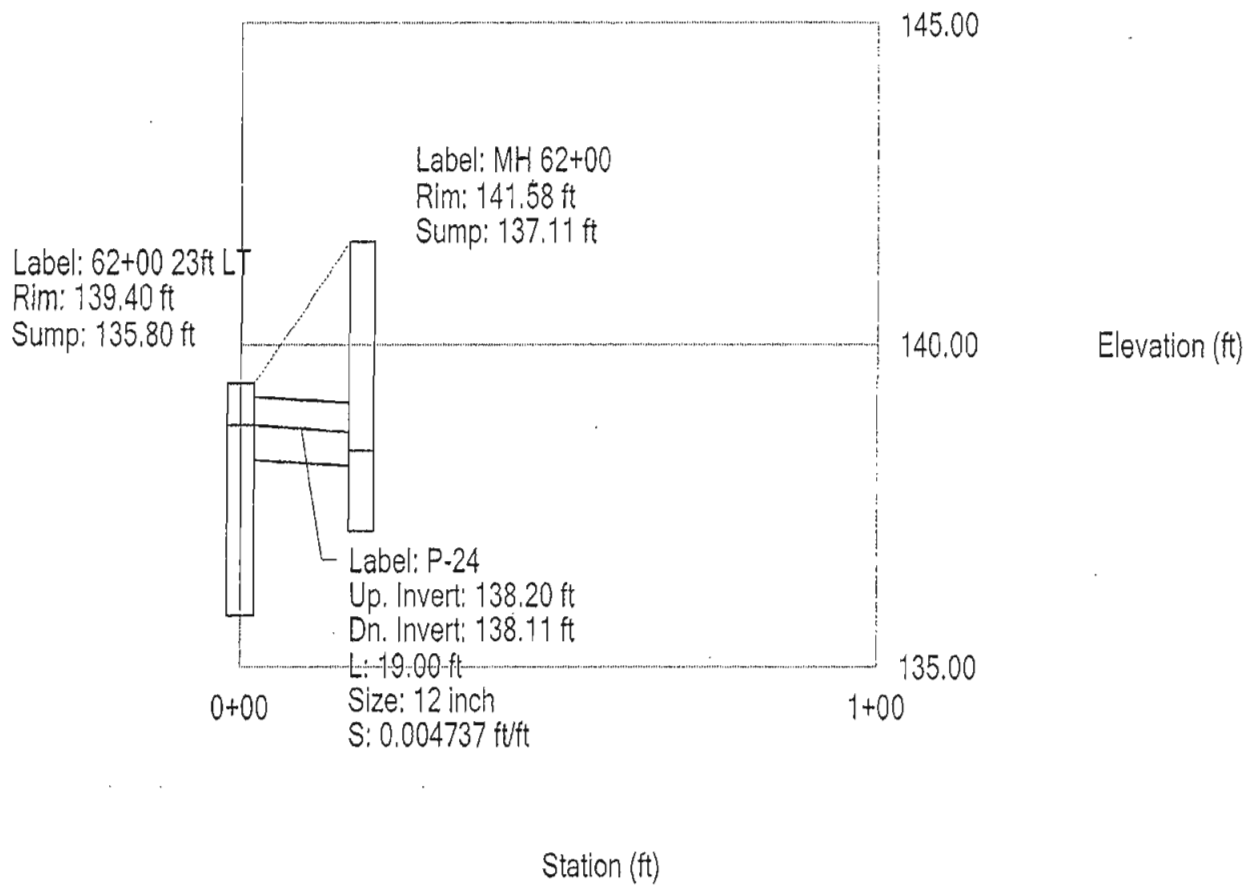

Profile: Profile - 3

Scenario: 59+50 To 69+00-10yr

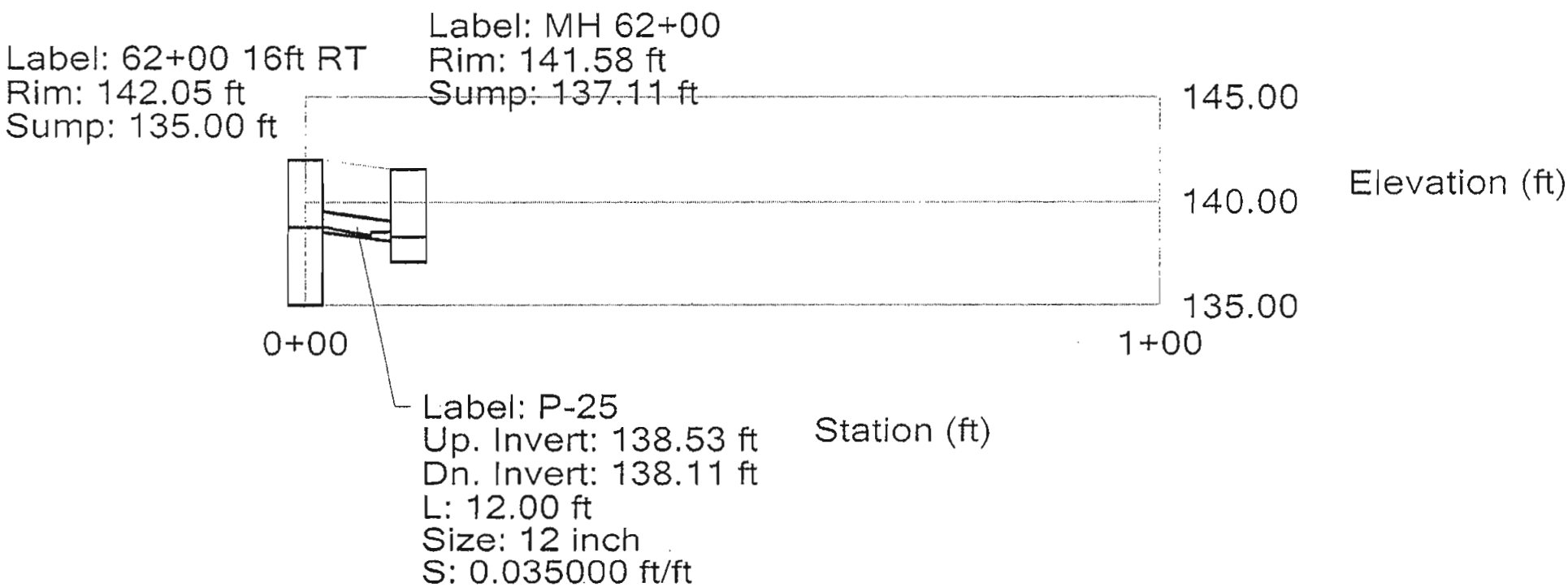

Profile: Profile - 4

Scenario: 59+50 To 69+00-10yr

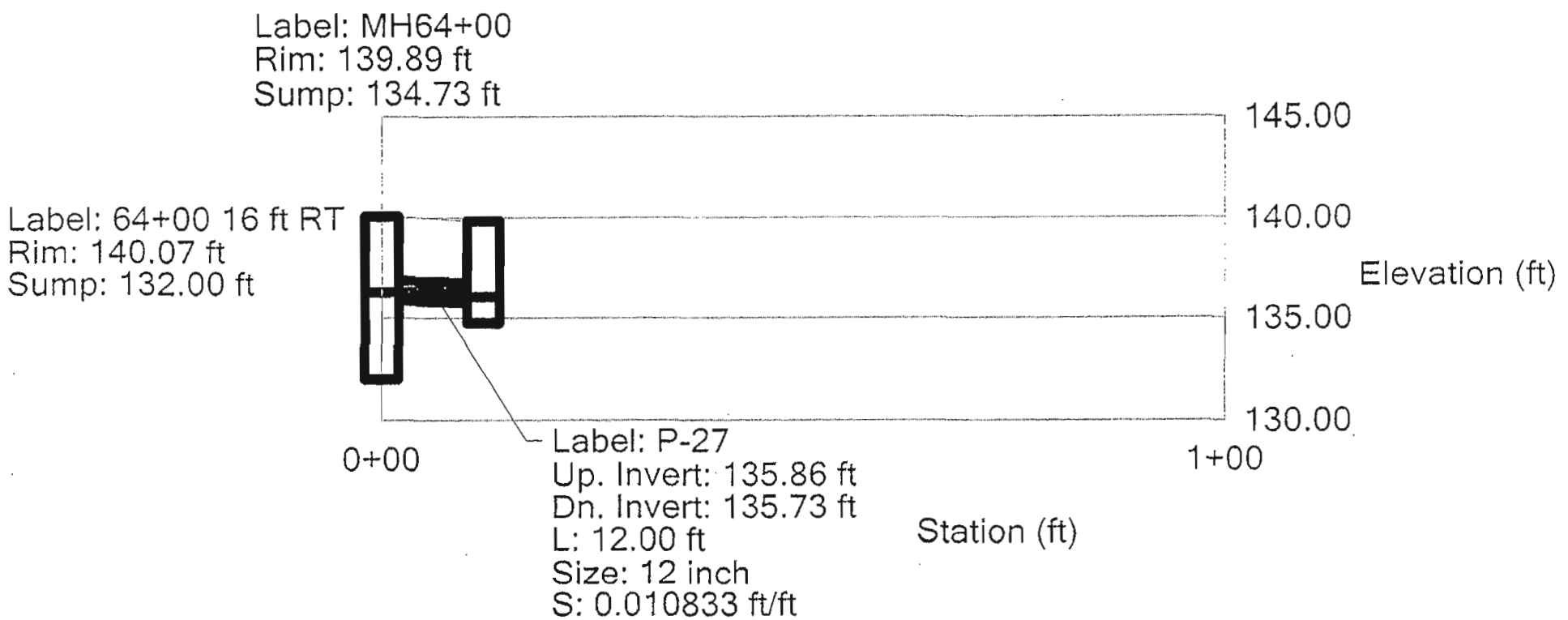

Profile: Profile - 5

Scenario: 59+50 To 69+00-10yr

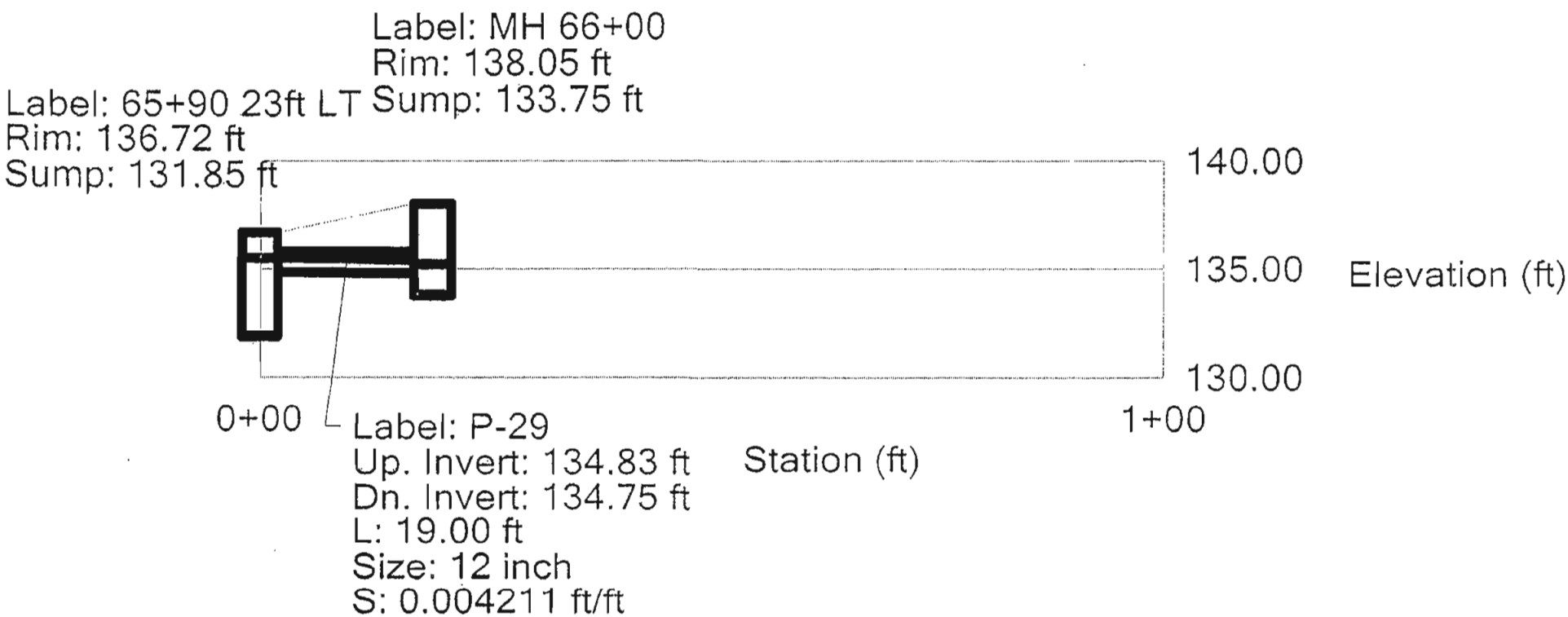

Profile: Profile - 6

Scenario: 59+50 To 69+00-10yr

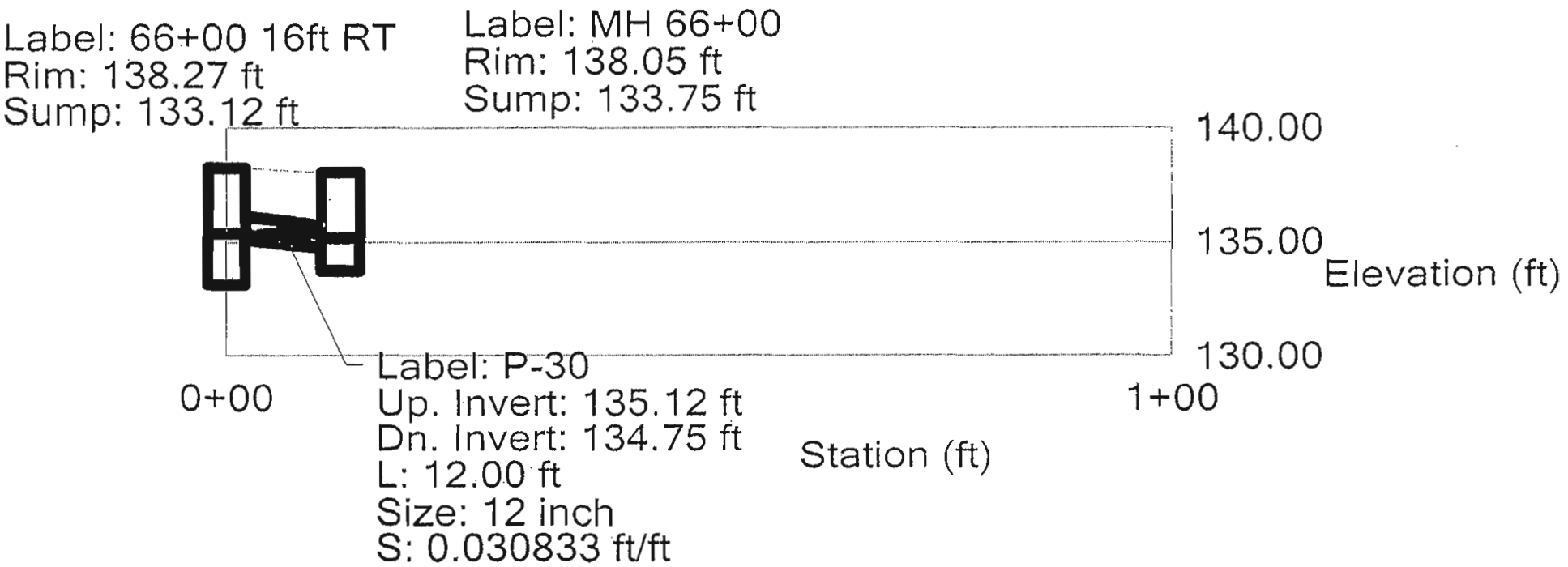

Scenario: 62+00To 88+37-10yr

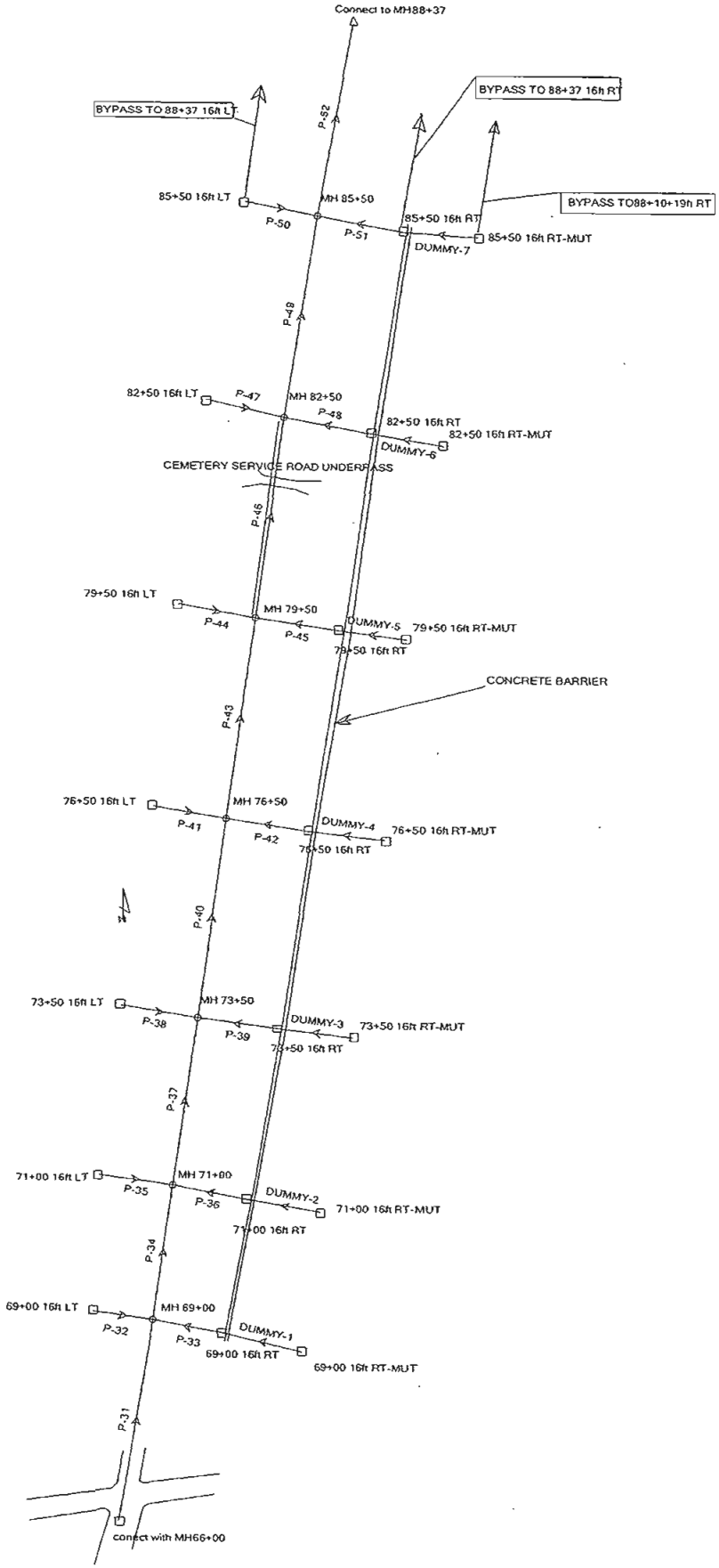

Title: BUSWAY
p:\...\stormcad\sta-6200-8550-part-2.stm
12/04/09 11:51:07 AM © Bentley Systems, Inc. Haestad Methods Solution Center Watertown, CT 06795 USA +1-203-755-1666

URS CorporationRocky Hill

Project Engineer: Dawei Shi
StormCAD v5.6 [05.06.014.00]
Page 1 of 1

Gutter Flow Analysis (10 yr storm event)

Label	Inlet	Area (acres)	Inlet C	Local Tc (min)	Total Inlet CA (acres)	Total Flow To Inlet (cfs)	Longitudinal Slope (ft/ft)	Gutter Cross Slope (ft/ft)	Gutter Ditch Spread (ft)	Intercepted CA (acres)	Gutter Ditch Depth (ft)	Total Bypassed Flow (cfs)	Bypassed CA (acres)	Clogging Factor (%)
69+00 16ft LT	Combination Type C-M - Grate Type A	0.1500	.9000	5.00	0.1350	0.816	005000	0.040	5.84	0.0996	0.20	0.214	0.0354	0.0
69+00 16ft RT	Combination Type C-M-2 - Grate Type A -one-side	0.0648	.9000	5.00	0.0583	0.353	005000	0.040	3.61	0.0492	0.14	0.055	0.0091	0.0
69+00 16ft RT	Combination Type C-M-2 - Grate Type A -one-side	0.0500	.9000	5.00	0.0450	0.272	005000	0.020	5.04	0.0385	0.10	0.039	0.0065	0.0
71+00 16ft LT	Grate Type RPW - Grate Type A	0.0700	.9000	5.00	0.0984	0.595	005000	0.040	4.78	0.0705	0.18	0.169	0.0280	25.0
71+00 16ft RT	Combination Type C-M-2 - Grate Type A -one-side	0.0731	.9000	5.00	0.0749	0.453	005000	0.040	3.96	0.0607	0.16	0.086	0.0141	0.0
71+00 16ft RT	Combination Type C-M-2 - Grate Type A -one-side	0.0559	.9000	5.00	0.0568	0.344	005000	0.020	5.50	0.0471	0.11	0.058	0.0096	0.0
73+50 16ft LT	Grate Type RPW - Grate Type A	0.1000	.9000	5.00	0.1180	0.714	005000	0.040	5.38	0.0815	0.19	0.221	0.0365	25.0
73+50 16ft RT	Combination Type C-M-2 - Grate Type A -one-side	0.1028	.9000	5.00	0.1067	0.645	005000	0.040	5.04	0.0817	0.18	0.151	0.0250	0.0
73+50 16ft RT	Combination Type C-M-2 - Grate Type A -one-side	0.0699	.9000	5.00	0.0726	0.439	005000	0.020	6.03	0.0581	0.12	0.087	0.0144	0.0
76+50 16ft LT	Grate Type RPW - Grate Type A	0.1200	.9000	5.00	0.1445	0.874	005000	0.040	6.09	0.0958	0.20	0.295	0.0487	25.0
76+50 16ft RT	Combination Type C-M-2 - Grate Type A -one-side	0.1234	.9000	5.00	0.1360	0.823	005000	0.040	5.87	0.1002	0.20	0.217	0.0358	0.0
76+50 16ft RT	Combination Type C-M-2 - Grate Type A -one-side	0.0831	.9000	5.00	0.0892	0.540	005000	0.020	6.51	0.0692	0.13	0.121	0.0200	0.0
79+50 16ft LT	Grate Type RPW - Grate Type A	0.1200	.9000	5.00	0.1567	0.948	021700	0.040	3.97	0.1072	0.16	0.300	0.0496	25.0
79+50 16ft RT	Combination Type C-M-2 - Grate Type A -one-side	0.1234	.9000	5.00	0.1469	0.888	006700	0.040	5.63	0.1054	0.19	0.251	0.0415	0.0
79+50 16ft RT	Combination Type C-M-2 - Grate Type A -one-side	0.0832	.9000	5.00	0.0949	0.574	006700	0.020	6.31	0.0718	0.13	0.140	0.0231	0.0
82+50 16ft LT	Grate Type RPW - Grate Type A	0.1200	.9000	5.00	0.1576	0.953	021700	0.040	3.98	0.1070	0.16	0.306	0.0505	25.0
82+50 16ft RT	Combination Type C-M-2 - Grate Type A -one-side	0.1234	.9000	5.00	0.1525	0.922	021700	0.040	3.93	0.1094	0.16	0.261	0.0431	0.0
82+50 16ft RT	Combination Type C-M-2 - Grate Type A -one-side	0.0833	.9000	5.00	0.0981	0.593	021700	0.020	5.13	0.0722	0.10	0.156	0.0259	0.0
85+50 16ft LT	Combination Type C-M - Grate Type A	0.0500	.9000	5.00	0.0955	0.578	021700	0.040	3.30	0.0747	0.13	0.126	0.0209	0.0
85+50 16ft RT	Combination Type C-M-2 - Grate Type A -one-side	0.1091	.9000	5.00	0.1413	0.855	021700	0.040	3.82	0.1008	0.15	0.245	0.0405	0.0
85+50 16ft RT	Combination Type C-M-2 - Grate Type A -one-side	0.2989	.9000	5.00	0.2949	1.783	021700	0.020	7.74	0.1668	0.15	0.775	0.1281	0.0
conect with M	Generic Default 100%	0.0000	.0000	0.00	0.0000	0.000		0.020	0.00	0.0000	0.00	0.000	0.0000	

Scenario: 0To 88+37-10yr

DOT Report

Upstream Node	Downstream Node	Pipe Flow Time (min)	System Flow Time (min)	Upstream Inlet CA (acres)	System CA (acres)	System Intensity (in/hr)	Section Size	Material	Mannings n	Length (ft)	Upstream Invert Elevation (ft)	Downstream Invert Elevation (ft)	Constructed Slope (ft/ft)	Full Capacity (cfs)	Total System Flow (cfs)	Average Velocity (ft/s)
69+00 16ft RT-M	69+00 16ft RT	0.01	5.00	0.0450	0.0385	6.00	12 inch	Concrete	0.013	1.00	132.92	132.90	0.020000	5.038	0.233	3.27
71+00 16ft RT-M	71+00 16ft RT	0.00	5.00	0.0503	0.0471	6.00	12 inch	Concrete	0.013	1.00	132.12	132.10	0.020000	5.038	0.285	3.47
73+50 16ft RT-M	73+50 16ft RT	0.00	5.00	0.0629	0.0581	6.00	12 inch	Concrete	0.013	1.00	131.14	131.12	0.020000	5.038	0.352	3.69
76+50 16ft RT-M	76+50 16ft RT	0.01	5.00	0.0748	0.0692	6.00	12 inch	Concrete	0.013	1.00	129.61	129.60	0.010000	3.563	0.419	3.04
79+50 16ft RT-M	79+50 16ft RT	0.01	5.00	0.0749	0.0718	6.00	12 inch	Concrete	0.013	1.00	128.11	128.10	0.010000	3.563	0.434	3.07
82+50 16ft RT-M	82+50 16ft RT	0.01	5.00	0.0750	0.0722	6.00	12 inch	Concrete	0.013	1.00	125.33	125.32	0.010000	3.563	0.437	3.08
85+50 16ft RT-M	85+50 16ft RT	0.00	5.00	0.2690	0.1668	6.00	12 inch	Concrete	0.013	1.00	120.31	120.30	0.010000	3.563	1.009	3.90
conect with MH6	MH 69+00	0.87	22.03	0.0000	3.7180	3.40	24 inch	Concrete	0.013	297.00	133.75	132.25	0.005051	16.076	12.742	5.68
69+00 16ft LT	MH 69+00	0.06	5.00	0.1350	0.0996	6.00	12 inch	Concrete	0.013	12.00	133.35	133.25	0.008333	3.252	0.602	3.16
69+00 16ft RT	MH 69+00	0.03	5.01	0.0583	0.0878	6.00	12 inch	Concrete	0.013	12.00	132.90	132.25	0.054167	8.292	0.531	5.92
MH 69+00	MH 71+00	0.52	22.90	N/A	3.9053	3.40	24 inch	Concrete	0.013	195.00	132.25	131.00	0.006410	18.111	13.384	6.31
71+00 16ft LT	MH 71+00	0.07	5.00	0.0630	0.0705	6.00	12 inch	Concrete	0.013	12.00	132.12	132.00	0.010000	3.563	0.426	3.06
71+00 16ft RT	MH 71+00	0.06	5.00	0.0658	0.1079	6.00	12 inch	Concrete	0.013	12.00	132.10	132.00	0.008333	3.252	0.652	3.24
MH 71+00	MH 73+50	0.78	23.42	N/A	4.0836	3.36	24 inch	Concrete	0.013	246.00	131.00	130.00	0.004065	14.423	13.824	5.23
73+50 16ft LT	MH 73+50	0.06	5.00	0.0900	0.0815	6.00	12 inch	Concrete	0.013	12.00	131.12	131.00	0.010000	3.563	0.493	3.19
73+50 16ft RT	MH 73+50	0.05	5.00	0.0925	0.1398	6.00	12 inch	Concrete	0.013	12.00	131.12	131.00	0.010000	3.563	0.846	3.72
MH 73+50	MH 76+50	0.85	24.20	N/A	4.3050	3.28	24 inch	Concrete	0.013	296.00	130.00	128.50	0.005068	16.103	14.233	5.79
76+50 16ft LT	MH 76+50	0.06	5.00	0.1080	0.0958	6.00	12 inch	Concrete	0.013	12.00	129.60	129.50	0.008333	3.252	0.579	3.13

© Bentley Systems, Inc.

DOT Report

Upstream Node	Downstream Node	Pipe Flow Time (min)	System Flow Time (min)	Upstream Inlet CA (acres)	System CA (acres)	System Intensity (in/hr)	Section Size	Material	Mannings n	Length (ft)	Upstream Invert Elevation (ft)	Downstream Invert Elevation (ft)	Constructed Slope (ft/ft)	Full Capacity (cfs)	Total System Flow (cfs)	Average Velocity (ft/s)
76+50 16ft RT	MH 76+50	0.05	5.01	0.1111	0.1694	6.00	12 inch	Concrete	0.013	12.00	129.60	129.50	0.008333	3.252	1.024	3.67
MH 76+50	MH 79+50	0.85	25.05	N/A	4.5701	3.19	24 inch	Concrete	0.013	296.00	128.50	127.00	0.005068	16.103	14.716	5.81
79+50 16ft LT	MH 79+50	0.05	5.00	0.1080	0.2072	6.00	12 inch	Concrete	0.013	12.00	128.10	128.00	0.008333	3.252	1.253	3.87
79+50 16ft RT	MH 79+50	0.05	5.01	0.1111	0.1772	6.00	12 inch	Concrete	0.013	12.00	128.10	128.00	0.008333	3.252	1.072	3.71
MH 79+50	MH 82+50	0.78	25.90	N/A	4.9545	3.11	18 inch	Concrete	0.013	296.00	127.00	124.22	0.009392	20.359	15.530	6.34
82+50 16ft LT	MH 82+50	0.06	5.00	0.1080	0.1070	6.00	12 inch	Concrete	0.013	12.00	125.32	125.22	0.008333	3.252	0.647	3.23
82+50 16ft RT	MH 82+50	0.05	5.01	0.1111	0.1816	6.00	12 inch	Concrete	0.013	12.00	125.32	125.22	0.008333	3.252	1.098	3.74
MH 82+50	MH 85+50	0.52	26.68	N/A	5.2431	3.03	30 inch	Concrete	0.013	296.00	124.22	119.19	0.016993	53.466	16.024	9.52
85+50 16ft LT	MH 85+50	0.06	5.00	0.0450	0.0747	6.00	12 inch	Concrete	0.013	12.00	120.35	120.19	0.013333	4.114	0.452	3.44
85+50 16ft RT	MH 85+50	0.05	5.00	0.0982	0.2676	6.00	12 inch	Concrete	0.013	12.00	120.30	120.19	0.009167	3.411	1.618	4.29
MH 85+50	Connect to MI	0.63	27.20	N/A	5.5854	3.00	30 inch	Concrete	0.013	283.00	119.19	116.76	0.008587	38.006	16.890	7.51

Pipe Report

Label	Upstream Node	Downstream Node	Section Size	Length (ft)	Cons Slope (ft/ft)	Total System Flow (cfs)	Full Capacity (cfs)	Average Velocity (ft/s)	Hydraulic Grade Line Out (ft)	Hydraulic Grade Line In (ft)	Upstream Invert Elevation (ft)	Downstream Invert Elevation (ft)	Upstream Ground Elevation (ft)	Downstream Ground Elevation (ft)	Upstream Cover (ft)	Downstream Cover (ft)	Mannings n
DUMN	69+00 16ft R	69+00 16ft RT	12 inch	1.00	0.020000	0.233	5.038	3.27	133.57	133.57	132.92	132.90	136.17	136.17	2.25	2.27	0.013
DUMN	71+00 16ft R	71+00 16ft RT	12 inch	1.00	0.020000	0.285	5.038	3.47	132.86	132.86	132.12	132.10	135.20	135.20	2.08	2.10	0.013
DUMN	73+50 16ft R	73+50 16ft RT	12 inch	1.00	0.020000	0.352	5.038	3.69	131.80	131.80	131.14	131.12	133.90	133.90	1.76	1.78	0.013
DUMN	76+50 16ft R	76+50 16ft RT	12 inch	1.00	0.010000	0.419	3.563	3.04	130.36	130.36	129.61	129.60	132.40	132.40	1.79	1.80	0.013
DUMN	79+50 16ft R	79+50 16ft RT	12 inch	1.00	0.010000	0.434	3.563	3.07	128.56	128.56	128.11	128.10	130.90	130.90	1.79	1.80	0.013
DUMN	82+50 16ft R	82+50 16ft RT	12 inch	1.00	0.010000	0.437	3.563	3.08	125.86	125.86	125.33	125.32	128.63	128.63	2.30	2.31	0.013
DUMN	85+50 16ft R	85+50 16ft RT	12 inch	1.00	0.010000	1.009	3.563	3.90	120.88	120.88	120.31	120.30	123.67	123.67	2.36	2.37	0.013
P-31	conect with M	MH 69+00	24 inch	297.00	0.005051	12.742	16.076	5.68	133.62	135.09	133.75	132.25	138.05	136.54	2.30	2.29	0.013
P-32	69+00 16ft L	MH 69+00	12 inch	12.00	0.008333	0.602	3.252	3.16	133.92	133.92	133.35	133.25	136.10	136.54	1.75	2.29	0.013
P-33	69+00 16ft R	MH 69+00	12 inch	12.00	0.054167	0.531	8.292	5.92	133.57	133.57	132.90	132.25	136.17	136.54	2.27	3.29	0.013
P-34	MH 69+00	MH 71+00	24 inch	195.00	0.006410	13.384	18.111	6.31	132.60	133.57	132.25	131.00	136.54	135.54	2.29	2.54	0.013
P-35	71+00 16ft L	MH 71+00	12 inch	12.00	0.010000	0.426	3.563	3.06	132.85	132.85	132.12	132.00	135.17	135.54	2.05	2.54	0.013
P-36	71+00 16ft R	MH 71+00	12 inch	12.00	0.008333	0.652	3.252	3.24	132.85	132.85	132.10	132.00	135.20	135.54	2.10	2.54	0.013
P-37	MH 71+00	MH 73+50	24 inch	246.00	0.004065	13.824	14.423	5.23	131.50	132.57	131.00	130.00	135.54	134.30	2.54	2.30	0.013
P-38	73+50 16ft L	MH 73+50	12 inch	12.00	0.010000	0.493	3.563	3.19	131.80	131.80	131.12	131.00	133.90	134.30	1.78	2.30	0.013
P-39	73+50 16ft R	MH 73+50	12 inch	12.00	0.010000	0.846	3.563	3.72	131.80	131.79	131.12	131.00	133.90	134.30	1.78	2.30	0.013
P-40	MH 73+50	MH 76+50	24 inch	296.00	0.005068	14.233	16.103	5.79	130.05	131.46	130.00	128.50	134.30	132.80	2.30	2.30	0.013
P-41	76+50 16ft L	MH 76+50	12 inch	12.00	0.008333	0.579	3.252	3.13	130.35	130.35	129.60	129.50	132.40	132.80	1.80	2.30	0.013
P-42	76+50 16ft R	MH 76+50	12 inch	12.00	0.008333	1.024	3.252	3.67	130.35	130.35	129.60	129.50	132.40	132.80	1.80	2.30	0.013
P-43	MH 76+50	MH 79+50	24 inch	296.00	0.005068	14.716	16.103	5.81	128.38	130.00	128.50	127.00	132.80	131.30	2.30	2.30	0.013
P-44	79+50 16ft L	MH 79+50	12 inch	12.00	0.008333	1.253	3.252	3.87	128.43	128.57	128.10	128.00	130.90	131.30	1.80	2.30	0.013
P-45	79+50 16ft R	MH 79+50	12 inch	12.00	0.008333	1.072	3.252	3.71	128.40	128.54	128.10	128.00	130.90	131.30	1.80	2.30	0.013
P-46	MH 79+50	MH 82+50	18 inch	296.00	0.009392	15.530	20.359	6.34	125.61	128.08	127.00	124.22	131.30	129.02	2.80	3.30	0.013
P-47	82+50 16ft L	MH 82+50	12 inch	12.00	0.008333	0.647	3.252	3.23	125.85	125.85	125.32	125.22	128.75	129.02	2.43	2.80	0.013
P-48	82+50 16ft R	MH 82+50	12 inch	12.00	0.008333	1.098	3.252	3.74	125.86	125.84	125.32	125.22	128.63	129.02	2.31	2.80	0.013
P-49	MH 82+50	MH 85+50	30 inch	296.00	0.016993	16.024	53.466	9.52	120.62	125.57	124.22	119.19	129.02	123.99	2.30	2.30	0.013
P-50	85+50 16ft L	MH 85+50	12 inch	12.00	0.013333	0.452	4.114	3.44	120.88	120.87	120.35	120.19	124.00	123.99	2.65	2.80	0.013
P-51	85+50 16ft R	MH 85+50	12 inch	12.00	0.009167	1.618	3.411	4.29	120.88	120.84	120.30	120.19	123.67	123.99	2.37	2.80	0.013
P-52	MH 85+50	Connect to MI	30 inch	283.00	0.008587	16.890	38.006	7.51	119.26	120.58	119.19	116.76	123.99	121.56	2.30	2.30	0.013

Profile: Profile - 1

Scenario: 62+00To 88+37-10yr

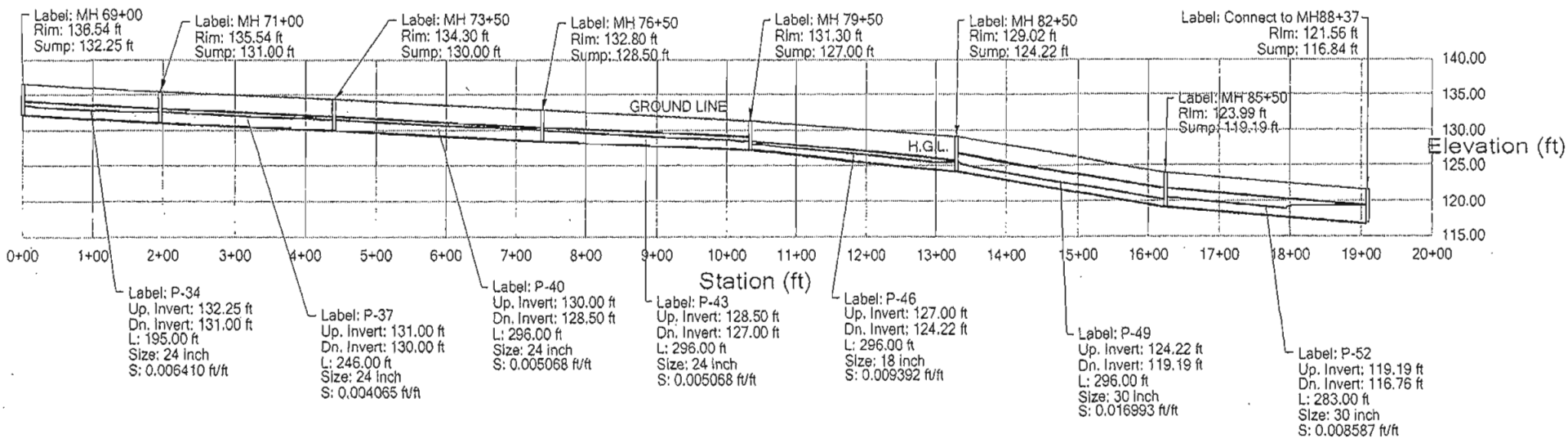

Profile: Profile - 2

Scenario: 62+00To 88+37-10yr

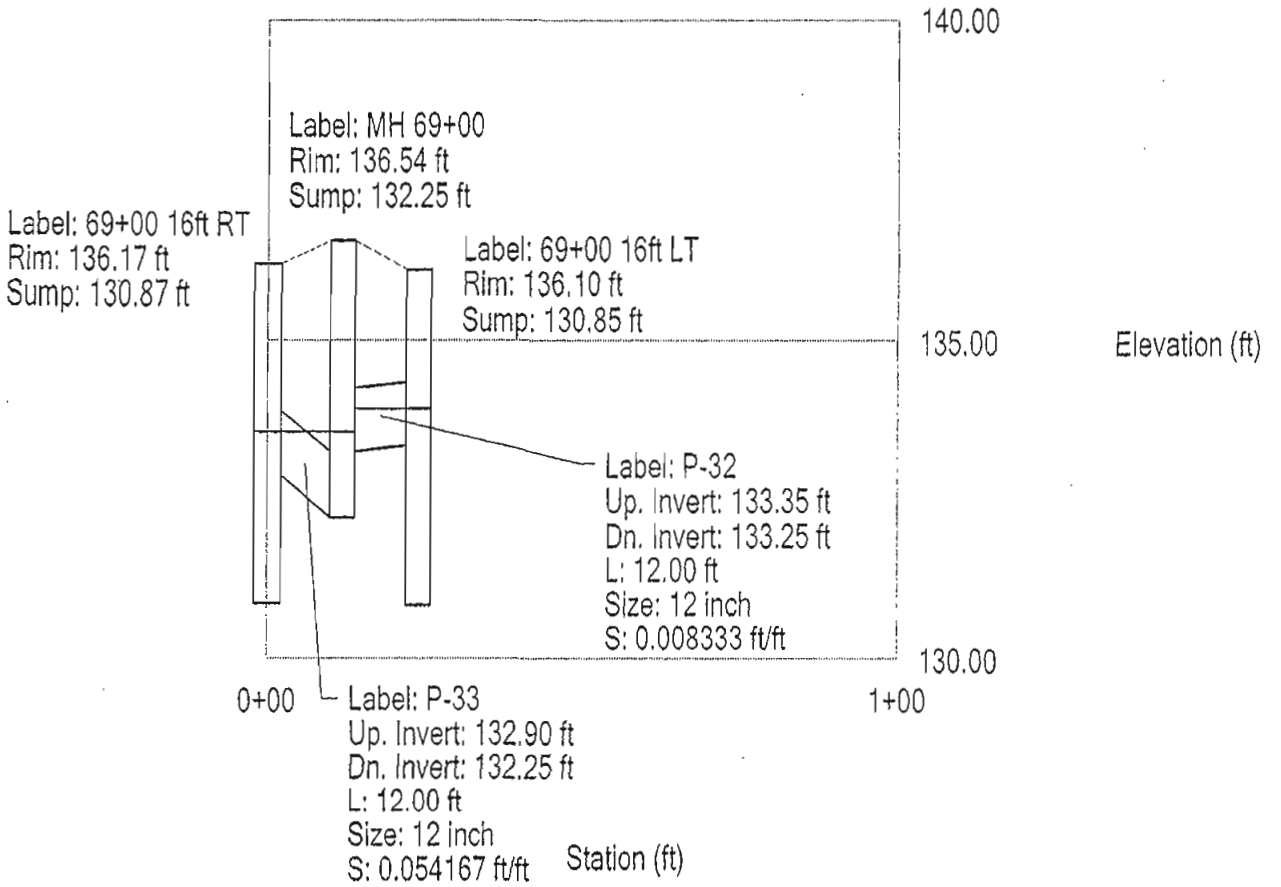

Profile: Profile - 3

Scenario: 62+00To 88+37-10yr

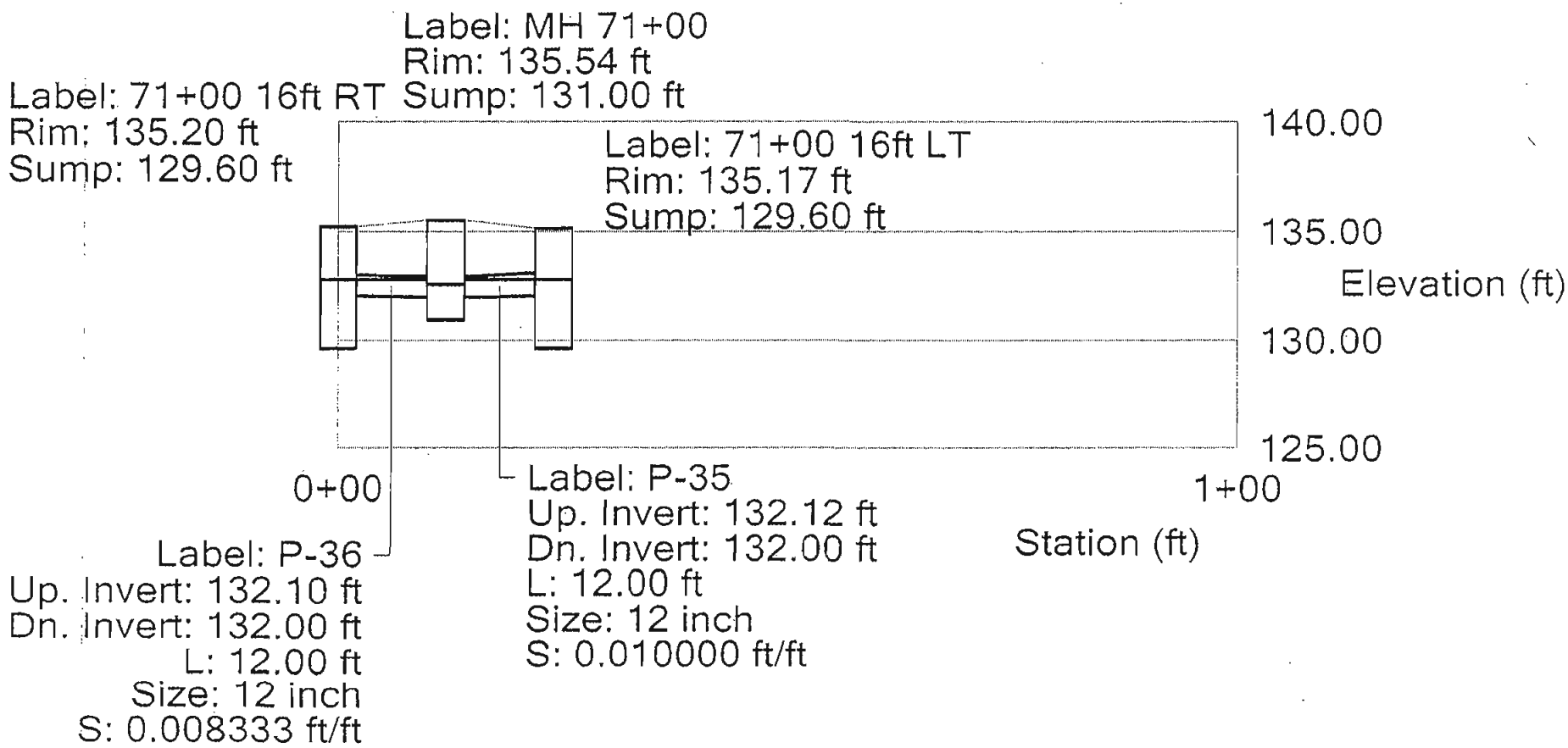

Profile: Profile - 4

Scenario: 62+00To 88+37-10yr

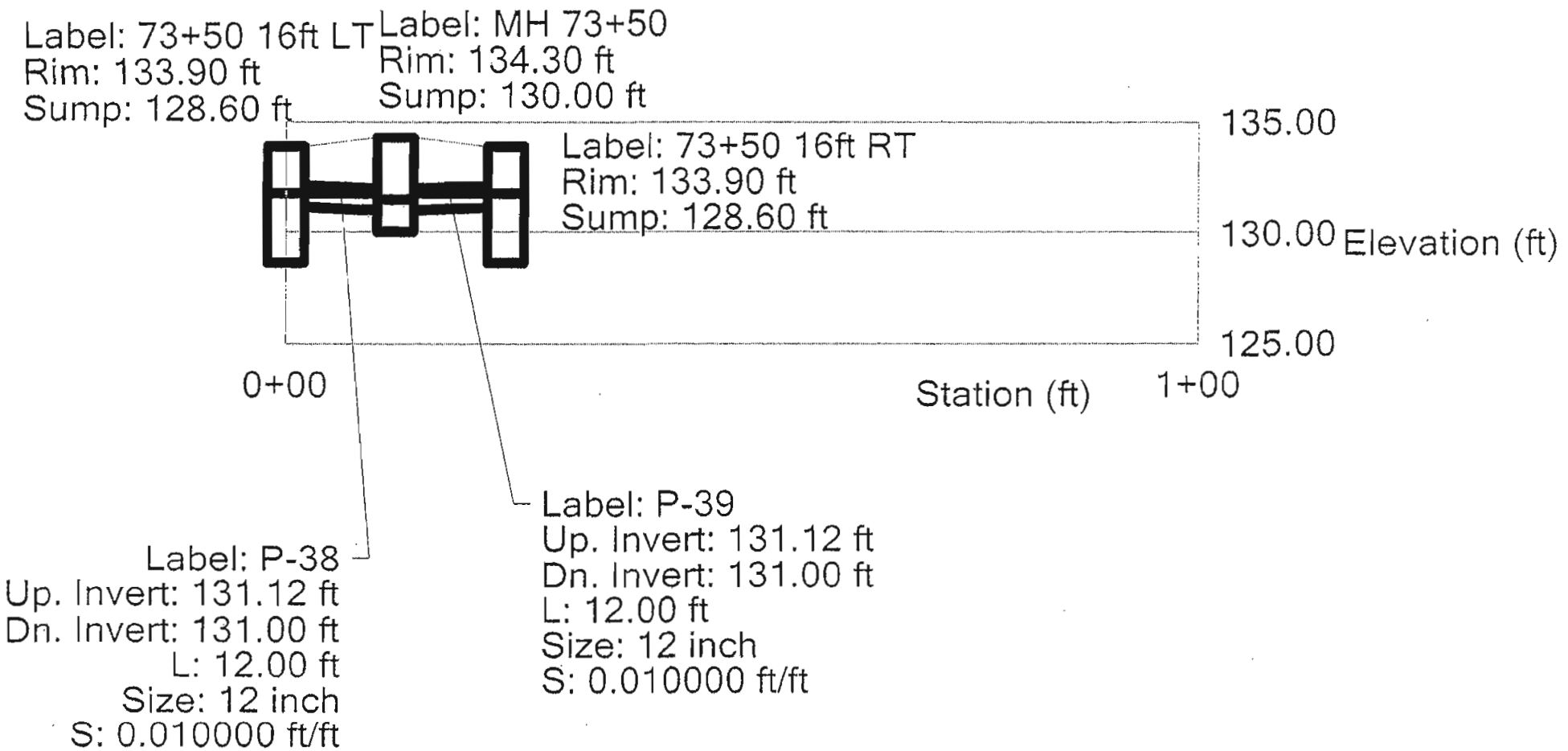

Profile: Profile - 5

Scenario: 62+00To 88+37-10yr

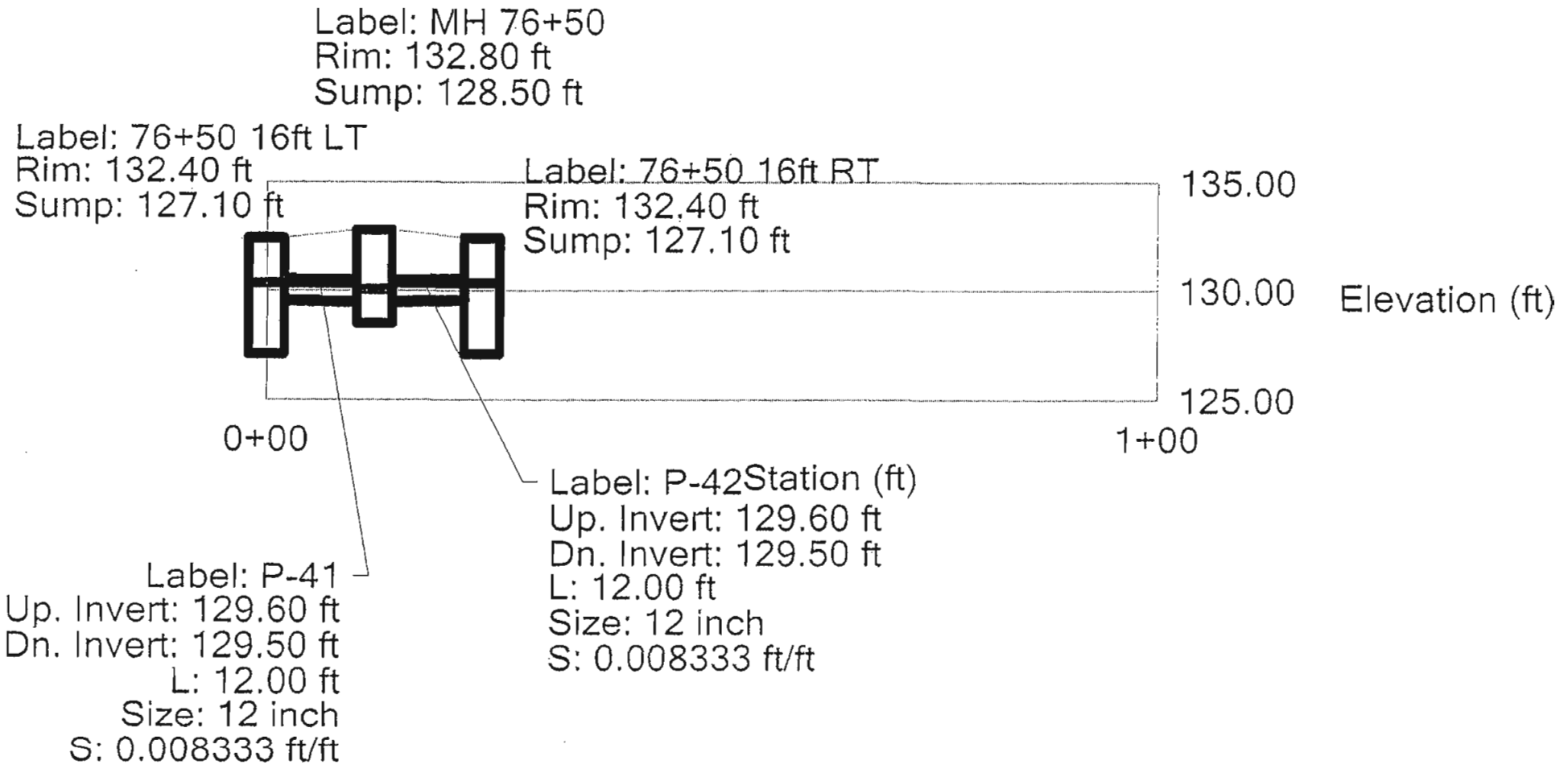

Profile: Profile - 6

Scenario: 62+00To 88+37-10yr

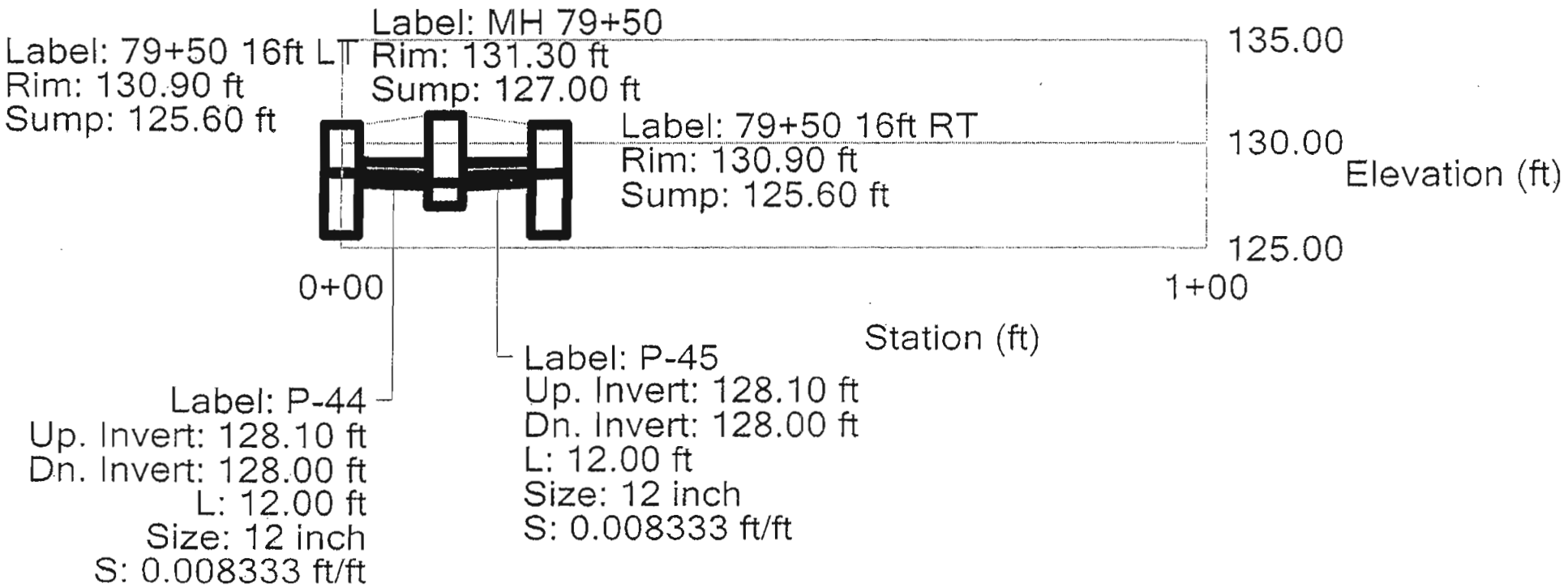

Profile: Profile - 7

Scenario: 62+00To 88+37-10yr

Label: MH 82+50
Rim: 129.02 ft
Sump: 124.22 ft

Label: 82+50 16ft RT
Rim: 128.63 ft
Sump: 123.32 ft

Label: 82+50 16ft LT
Rim: 128.75 ft
Sump: 123.32 ft

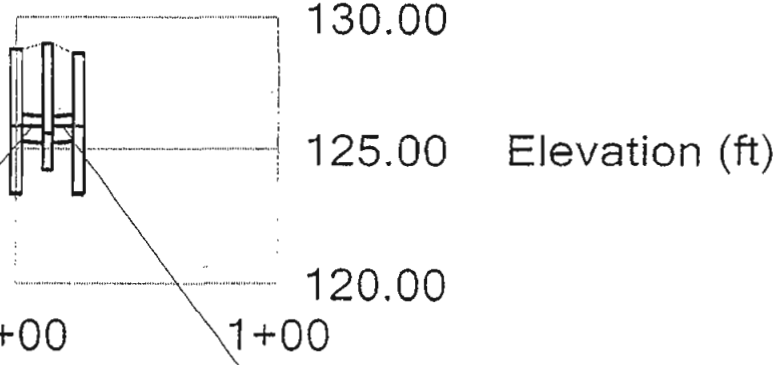

Label: P-47
Up. Invert: 125.32 ft
Dn. Invert: 125.22 ft
L: 12.00 ft
Size: 12 inch
S: 0.008333 ft/ft

Label: P-48
Up. Invert: 125.32 ft
Dn. Invert: 125.22 ft
L: 12.00 ft
Size: 12 inch
S: 0.008333 ft/ft

Profile: Profile - 8

Scenario: 62+00To 88+37-10yr

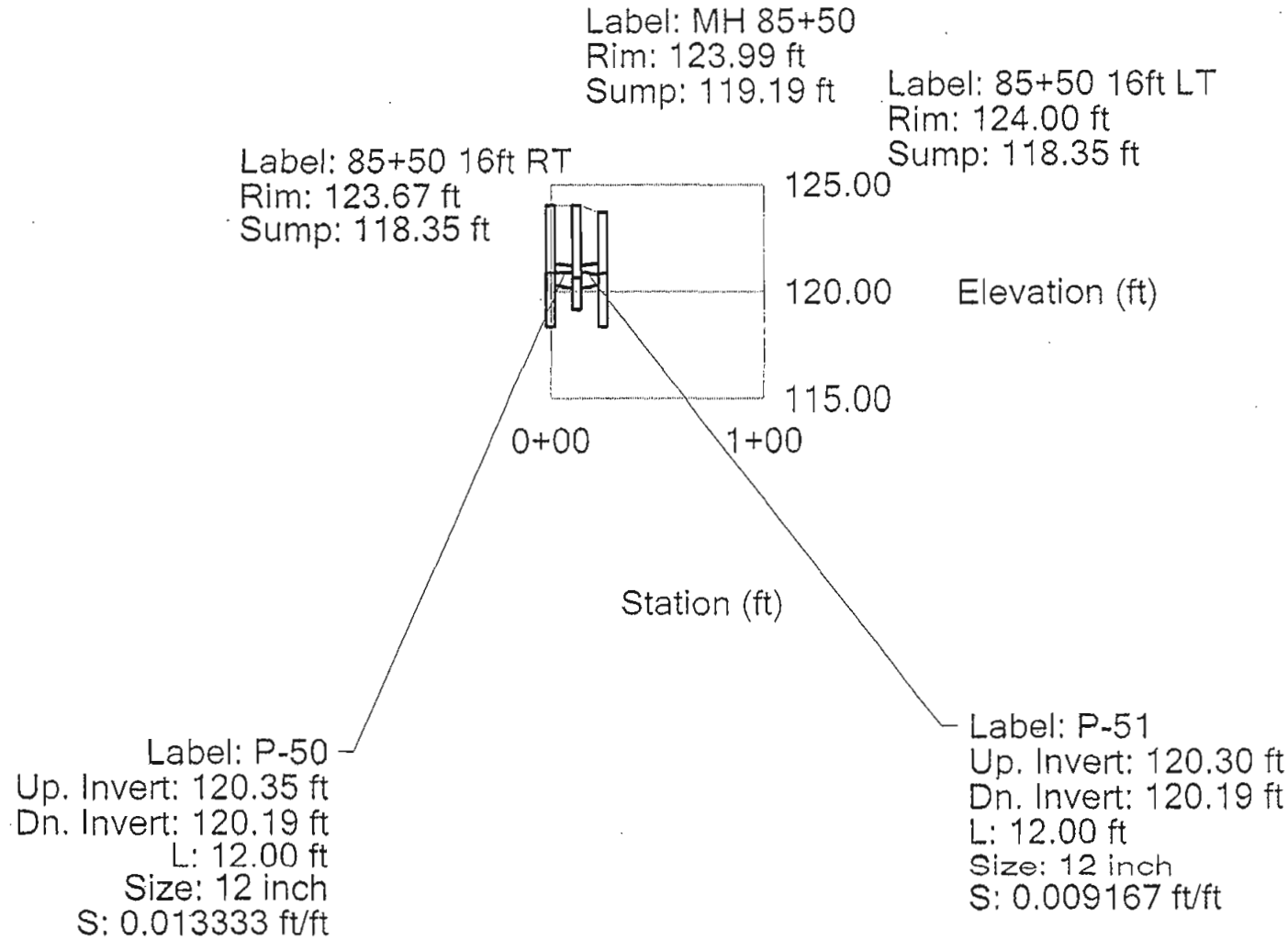

Scenario: 10 Yr Event

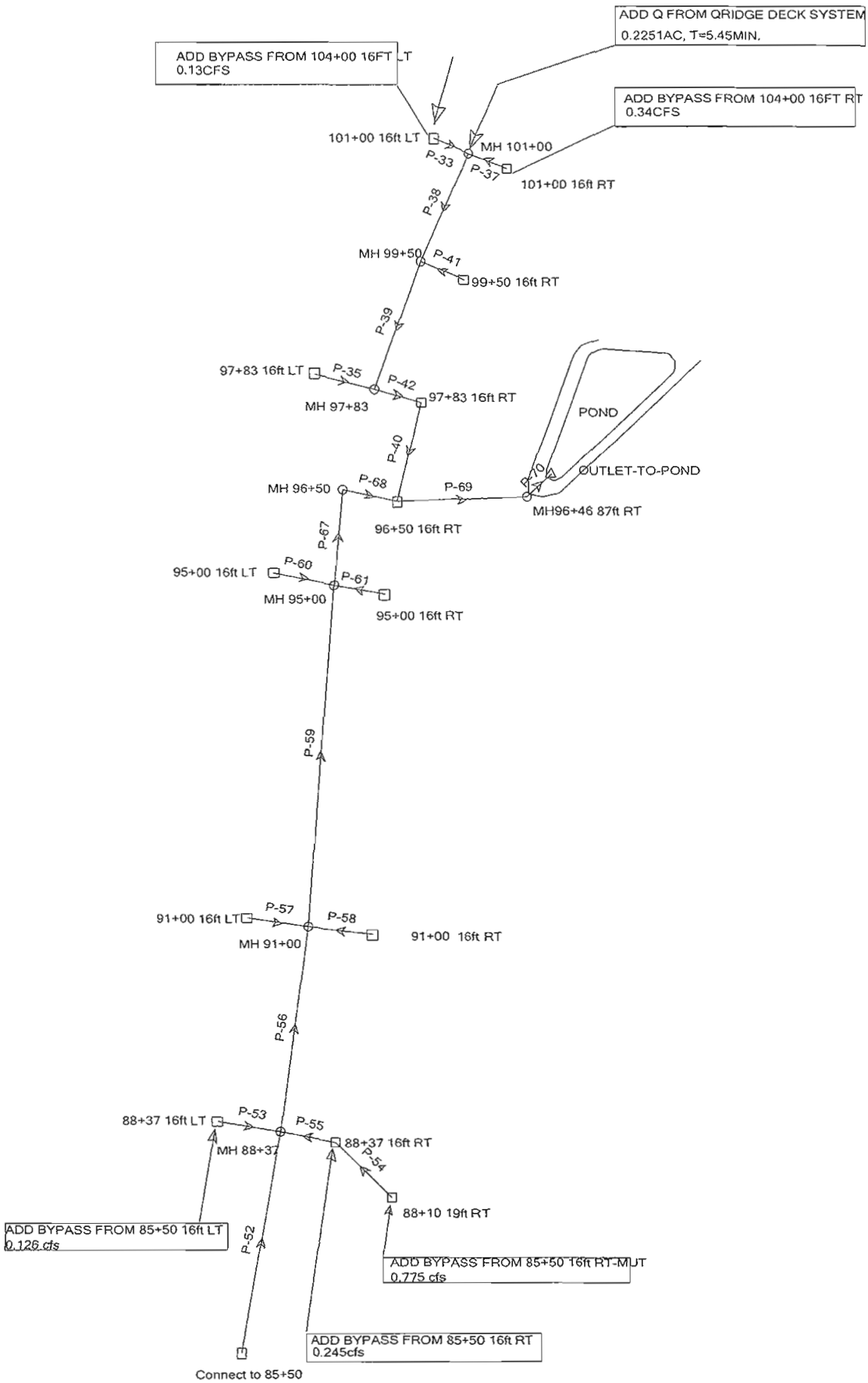

Gutter Flow Analysis (10 yr storm event)

Label	Inlet	Area (acres)	Inlet C	Local Tc (min)	Total Inlet CA (acres)	Total Flow To Inlet (cfs)	Longitudinal Slope (ft/ft)	Gutter Cross Slope (ft/ft)	Gutter Ditch Spread (ft)	Intercepted CA (acres)	Gutter Ditch Depth (ft)	Total Bypassed Flow (cfs)	Bypassed CA (acres)	Clogging Factor (%)
88+10 19ft RT	Combination Type C Single Grate - Grate Type A - P	0.0400	0.90	5.00	0.0360	0.993		0.020	5.63	0.0360	0.11	0.000	0.0000	0.0
88+37 16ft LT	Combination Type C-M - Grate Type A	0.1800	0.90	5.00	0.1620	1.106	0.008400	0.040	6.00	0.1386	0.20	0.160	0.0234	0.0
88+37 16ft RT	Combination Type C Single Grate - Grate Type A - P	0.0400	0.90	5.00	0.0360	0.463	0.008400	0.040	3.62	0.0310	0.14	0.065	0.0050	0.0
91+00 16ft R	Combination Type C Single Grate - Grate Type A - P	0.0500	0.90	5.00	0.0500	0.337	0.008400	0.040	3.22	0.0427	0.13	0.050	0.0074	0.0
91+00 16ft LT	Combination Type C Single Grate - Grate Type A - P	0.0600	0.90	5.00	0.0774	0.487	0.008400	0.040	3.69	0.0619	0.15	0.097	0.0155	0.0
95+00 16ft LT	Combination Type C Single Grate - Grate Type A - P	0.0581	0.71	5.00	0.0567	0.347	0.008400	0.034	3.59	0.0491	0.12	0.047	0.0077	0.0
95+00 16ft RT	Combination Type C Single Grate - Grate Type A - P	0.2205	0.73	5.00	0.1683	1.023	0.008400	0.040	5.00	0.1526	0.20	0.096	0.0157	0.0
96+50 16ft RT	Combination Type C Single Grate - Grate Type A - P	0.1003	0.90	5.00	0.0903	0.546	0.008400	0.040	3.86	0.0748	0.15	0.093	0.0154	0.0
97+83 16ft LT	Combination Type C Single Grate - Grate Type A - P	0.0659	0.90	5.00	0.0701	0.436		0.034	2.33	0.0701	0.07	0.000	0.0000	0.0
97+83 16ft RT	Combination Type C Double Grate - Type II - Grate T	0.2000	0.90	5.00	0.2532	1.562		0.040	3.63	0.2532	0.13	0.000	0.0000	0.0
99+50 16ft RT	Combination Type C Single Grate - Grate Type A - P	0.1000	0.90	5.00	0.1497	1.012	0.030900	0.035	4.13	0.1076	0.14	0.284	0.0420	0.0
101+00 16ft L	Combination Type C Single Grate - Grate Type A - P	0.0400	0.90	5.00	0.0360	0.348	0.031000	0.040	2.54	0.0329	0.10	0.030	0.0031	0.0
101+00 16ft F	Combination Type C Single Grate - Grate Type A - P	0.2100	0.90	5.00	0.1890	1.483	0.031000	0.040	4.45	0.1293	0.18	0.468	0.0597	0.0
Connect to 85	Combination Type C Single Grate - Grate Type A - P	0.0000	0.00	0.00	0.0000	0.000	0.007000	0.020	0.00	0.0000	0.00	0.000	0.0000	0.0

Scena 10 Yr Event

DOT Report

Upstream Node	Downstream Node	Pipe Flow Time (min)	System Flow Time (min)	Upstream Inlet CA (acres)	System CA (acres)	System Intensity (in/hr)	Section Size	Material	Mannings n	Length (ft)	Upstream Invert Elevation (ft)	Downstream Invert Elevation (ft)	Constructed Slope (ft/ft)	Full Capacity (cfs)	Total System Flow (cfs)	Average Velocity (ft/s)
101+00 16ft LT	MH 101+00	0.06	5.00	0.0360	0.0329	6.00	12 inch	Concrete	0.013	15.00	115.77	115.20	0.038000	6.945	0.318	4.49
97+83 16ft LT	MH 97+83	0.05	5.00	0.0593	0.0701	6.00	12 inch	Concrete	0.013	15.00	110.60	109.95	0.043333	7.416	0.436	5.16
101+00 16ft RT	MH 101+00	0.06	5.45	0.1890	0.3544	5.91	12 inch	Concrete	0.013	15.00	115.00	114.90	0.006667	2.909	2.344	4.12
MH 101+00	MH 99+50	0.35	5.51	N/A	0.3873	5.90	15 inch	Concrete	0.013	150.00	114.90	111.00	0.026000	10.416	2.654	7.22
MH 99+50	MH 97+83	0.57	5.86	N/A	0.4950	5.83	15 inch	Concrete	0.013	161.00	111.00	109.85	0.007143	5.459	3.337	4.67
97+83 16ft RT	96+50 16ft RT	0.41	6.49	0.1800	0.8182	5.65	15 inch	Concrete	0.013	127.00	109.75	108.80	0.007480	5.587	5.135	5.16
99+50 16ft RT	MH 99+50	0.08	5.00	0.0900	0.1076	6.00	12 inch	Concrete	0.013	15.00	111.10	111.00	0.006667	2.909	0.728	3.08
MH 97+83	97+83 16ft RT	0.05	6.43	N/A	0.5651	5.67	15 inch	Concrete	0.013	15.00	109.85	109.75	0.006667	5.274	3.670	4.64
Connect to 85+5	MH 88+37	0.63	27.20	0.0000	5.5854	3.00	30 inch	Concrete	0.013	284.00	119.19	116.78	0.008486	37.783	16.890	7.48
88+37 16ft LT	MH 88+37	0.05	5.00	0.1620	0.1386	6.00	12 inch	Concrete	0.013	10.00	118.35	118.26	0.009000	3.380	0.946	3.69
88+10 19ft RT	88+37 16ft RT	0.08	5.00	0.0360	0.0360	6.00	12 inch	Concrete	0.013	24.00	118.92	118.40	0.021667	5.244	0.993	5.13
88+37 16ft RT	MH 88+37	0.04	5.08	0.0360	0.0670	5.98	12 inch	Concrete	0.013	11.00	118.40	118.26	0.012727	4.019	1.390	4.65
MH 88+37	MH 91+00	0.56	27.83	N/A	5.7909	3.00	30 inch	Concrete	0.013	260.00	116.76	114.55	0.008500	37.814	18.605	7.67
91+00 16ft LT	MH 91+00	0.05	5.00	0.0540	0.0619	6.00	12 inch	Concrete	0.013	10.00	116.20	116.05	0.015000	4.363	0.389	3.44
91+00 16ft RT	MH 91+00	0.04	5.00	0.0450	0.0427	6.00	12 inch	Concrete	0.013	10.00	116.30	116.05	0.025000	5.633	0.287	3.76
MH 91+00	MH 95+00	0.86	28.40	N/A	5.8955	2.96	30 inch	Concrete	0.013	397.00	114.55	111.21	0.008413	37.620	18.729	7.66
95+00 16ft LT	MH 95+00	0.06	5.00	0.0413	0.0491	6.00	12 inch	Concrete	0.013	11.00	112.62	112.46	0.014545	4.297	0.300	3.15
95+00 16ft RT	MH 95+00	0.05	5.00	0.1610	0.1526	6.00	30 inch	Concrete	0.013	11.00	112.60	112.46	0.012727	46.271	0.928	3.74

Scena 10 Yr Event

DOT Report

Upstream Node	Downstream Node	Pipe Flow Time (min)	System Flow Time (min)	Upstream Inlet CA (acres)	System CA (acres)	System Intensity (in/hr)	Section Size	Material	Mannings n	Length (ft)	Upstream Invert Elevation (ft)	Downstream Invert Elevation (ft)	Constructed Slope (ft/ft)	Full Capacity (cfs)	Total System Flow (cfs)	Average Velocity (ft/s)
MH 95+00	MH 96+50	0.32	29.26	N/A	6.0972	2.87	30 inch	Concrete	0.013	147.00	111.21	109.97	0.008435	37.670	18.808	7.67
MH 96+50	96+50 16ft RT	0.03	29.58	N/A	6.0972	2.84	30 inch	Concrete	0.013	11.00	107.38	107.30	0.007273	34.978	18.611	7.24
96+50 16ft RT	MH96+46 87ft	0.07	29.61	0.0903	6.9903	2.84	30 inch	CMP	0.024	67.00	107.30	96.11	0.167015	90.793	21.623	15.17
MH96+46 87ft R	OUTLET-TO-R	0.06	29.68	N/A	6.9903	2.83	30 inch	Concrete	0.013	22.00	96.11	96.00	0.005000	29.002	21.571	6.47

Scena 10 Yr Event

Pipe Report

Label	Upstream Node	Downstream Node	Section Size	Length (ft)	Cons Slope (ft/ft)	Total System Flow (cfs)	Full Capacity (cfs)	Average Velocity (ft/s)	Hydraulic Grade Line Out (ft)	Hydraulic Grade Line In (ft)	Upstream Invert Elevation (ft)	Downstream Invert Elevation (ft)	Upstream Ground Elevation (ft)	Downstream Ground Elevation (ft)	Upstream Cover (ft)	Downstream Cover (ft)	Mannings n
P-33	101+00 16ft	MH 101+00	12 inch	15.00	0.038000	0.318	6.945	4.49	115.77	116.00	115.77	115.20	119.30	118.79	2.53	2.59	0.013
P-35	97+83 16ft L	MH 97+83	12 inch	15.00	0.043333	0.436	7.416	5.16	111.03	111.01	110.60	109.95	114.25	113.84	2.65	2.89	0.013
P-37	101+00 16ft	MH 101+00	12 inch	15.00	0.006667	2.344	2.909	4.12	115.87	115.92	115.00	114.90	118.20	118.79	2.20	2.89	0.013
P-38	MH 101+00	MH 99+50	15 inch	150.00	0.026000	2.654	10.416	7.22	111.74	115.75	114.90	111.00	118.79	115.30	2.64	3.05	0.013
P-39	MH 99+50	MH 97+83	15 inch	161.00	0.007143	3.337	5.459	4.67	111.03	111.74	111.00	109.85	115.30	113.84	3.05	2.74	0.013
P-40	97+83 16ft R	96+50 16ft RT	15 inch	127.00	0.007480	5.135	5.587	5.16	109.72	110.69	109.75	108.80	113.40	114.15	2.40	4.10	0.013
P-41	99+50 16ft R	MH 99+50	12 inch	15.00	0.006667	0.728	2.909	3.08	111.74	111.74	111.10	111.00	114.73	115.30	2.63	3.30	0.013
P-42	MH 97+83	97+83 16ft RT	15 inch	15.00	0.006667	3.670	5.274	4.64	111.00	111.03	109.85	109.75	113.84	113.40	2.74	2.40	0.013
P-52	Connect to 8	MH 88+37	30 inch	284.00	0.008486	16.890	37.783	7.48	118.27	120.58	119.19	116.78	123.98	121.57	2.29	2.29	0.013
P-53	88+37 16ft L	MH 88+37	12 inch	10.00	0.009000	0.946	3.380	3.69	118.63	118.76	118.35	118.26	121.20	121.57	1.85	2.31	0.013
P-54	88+10 19ft R	88+37 16ft RT	12 inch	24.00	0.021667	0.993	5.244	5.13	118.97	119.34	118.92	118.40	122.10	121.75	2.18	2.35	0.013
P-55	88+37 16ft R	MH 88+37	12 inch	11.00	0.012727	1.390	4.019	4.65	118.68	118.90	118.40	118.26	121.75	121.57	2.35	2.31	0.013
P-56	MH 88+37	MH 91+00	30 inch	260.00	0.008500	18.605	37.814	7.67	116.07	118.22	116.76	114.55	121.57	119.34	2.31	2.29	0.013
P-57	91+00 16ft L	MH 91+00	12 inch	10.00	0.015000	0.389	4.363	3.44	116.35	116.46	116.20	116.05	119.00	119.34	1.80	2.29	0.013
P-58	91+00 16ft R	MH 91+00	12 inch	10.00	0.025000	0.287	5.633	3.76	116.35	116.52	116.30	116.05	119.00	119.34	1.70	2.29	0.013
P-59	MH 91+00	MH 95+00	30 inch	397.00	0.008413	18.729	37.620	7.66	112.72	116.02	114.55	111.21	119.34	115.97	2.29	2.26	0.013
P-60	95+00 16ft L	MH 95+00	12 inch	11.00	0.014545	0.300	4.297	3.15	113.01	113.01	112.62	112.46	116.36	115.97	2.74	2.51	0.013
P-61	95+00 16ft R	MH 95+00	30 inch	11.00	0.012727	0.928	46.271	3.74	113.01	112.98	112.60	112.46	115.40	115.97	0.30	1.01	0.013
P-67	MH 95+00	MH 96+50	30 inch	147.00	0.008435	18.808	37.670	7.67	111.22	112.68	111.21	109.97	115.97	114.70	2.26	2.23	0.013
P-68	MH 96+50	96+50 16ft RT	30 inch	11.00	0.007273	18.611	34.978	7.24	109.02	108.99	107.38	107.30	114.70	114.15	4.82	4.35	0.013
P-69	96+50 16ft R	MH96+46 87f	30 inch	67.00	0.167015	21.623	90.793	15.17	98.20	108.88	107.30	96.11	114.15	99.60	4.35	0.99	0.024
P-70	MH96+46 87	OUTLET-TO-	30 inch	22.00	0.005000	21.571	29.002	6.47	97.96	97.99	96.11	96.00	99.60	96.00	0.99	-2.50	0.013

Profile
Scenario: 10 Yr Event

Profile: Profile - 1

Scenario: 10 Yr Event

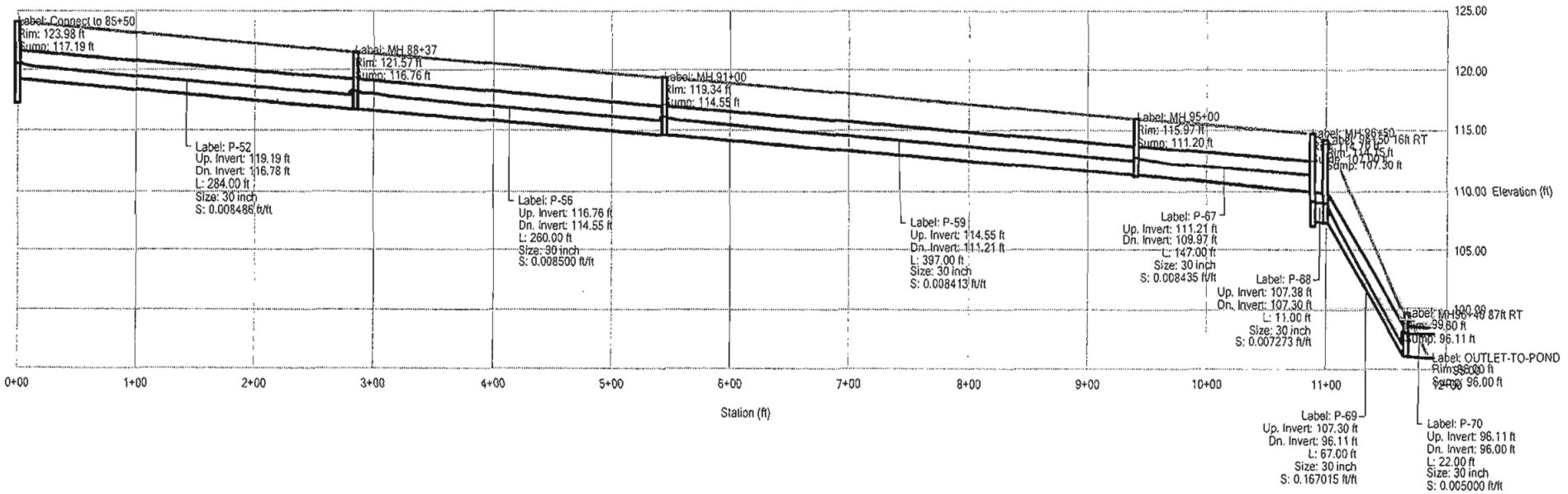

Profile: Profile - 2

Scenario: 10 Yr Event

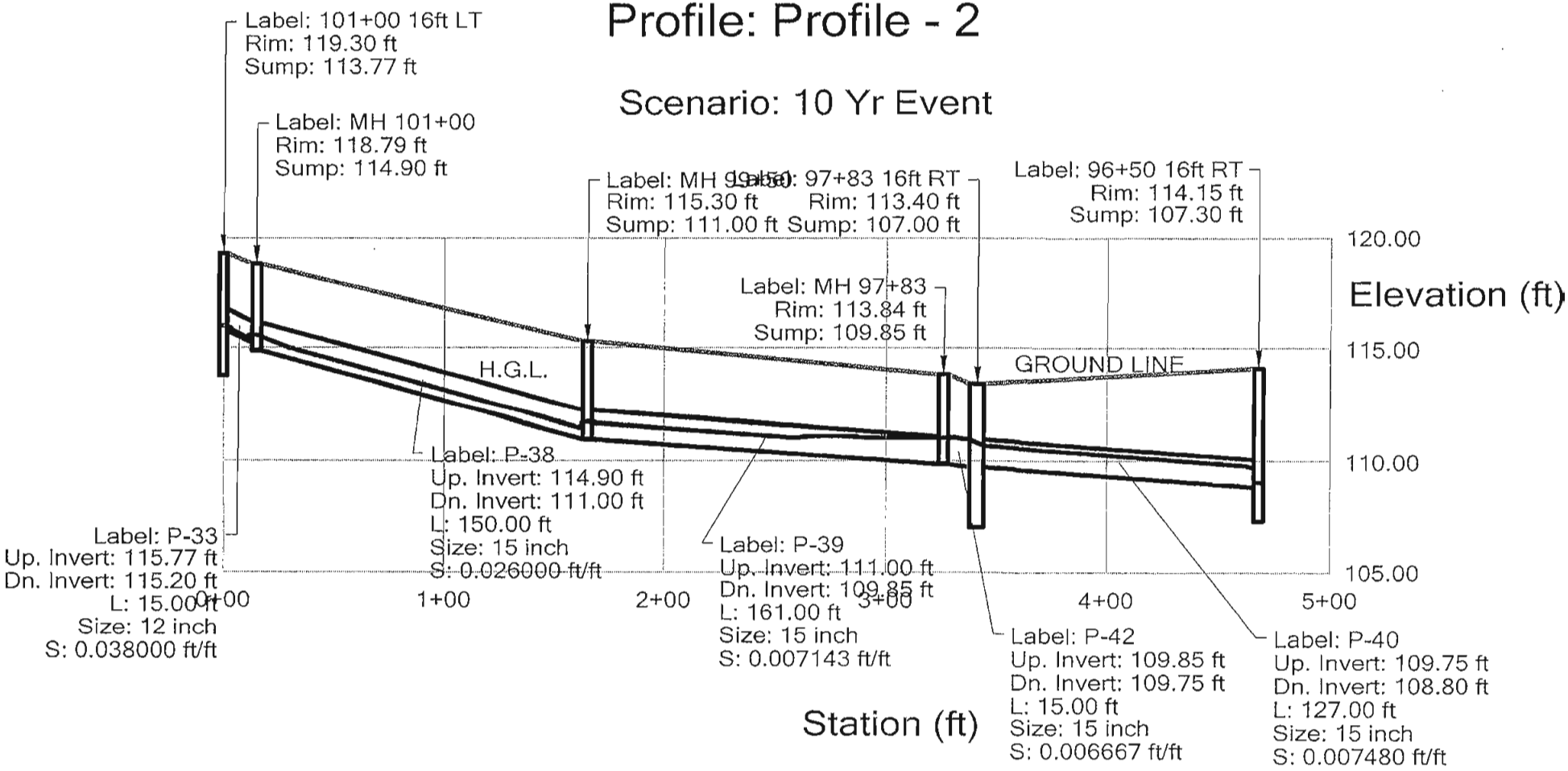

Profile: Profile - 3

Scenario: 10 Yr Event

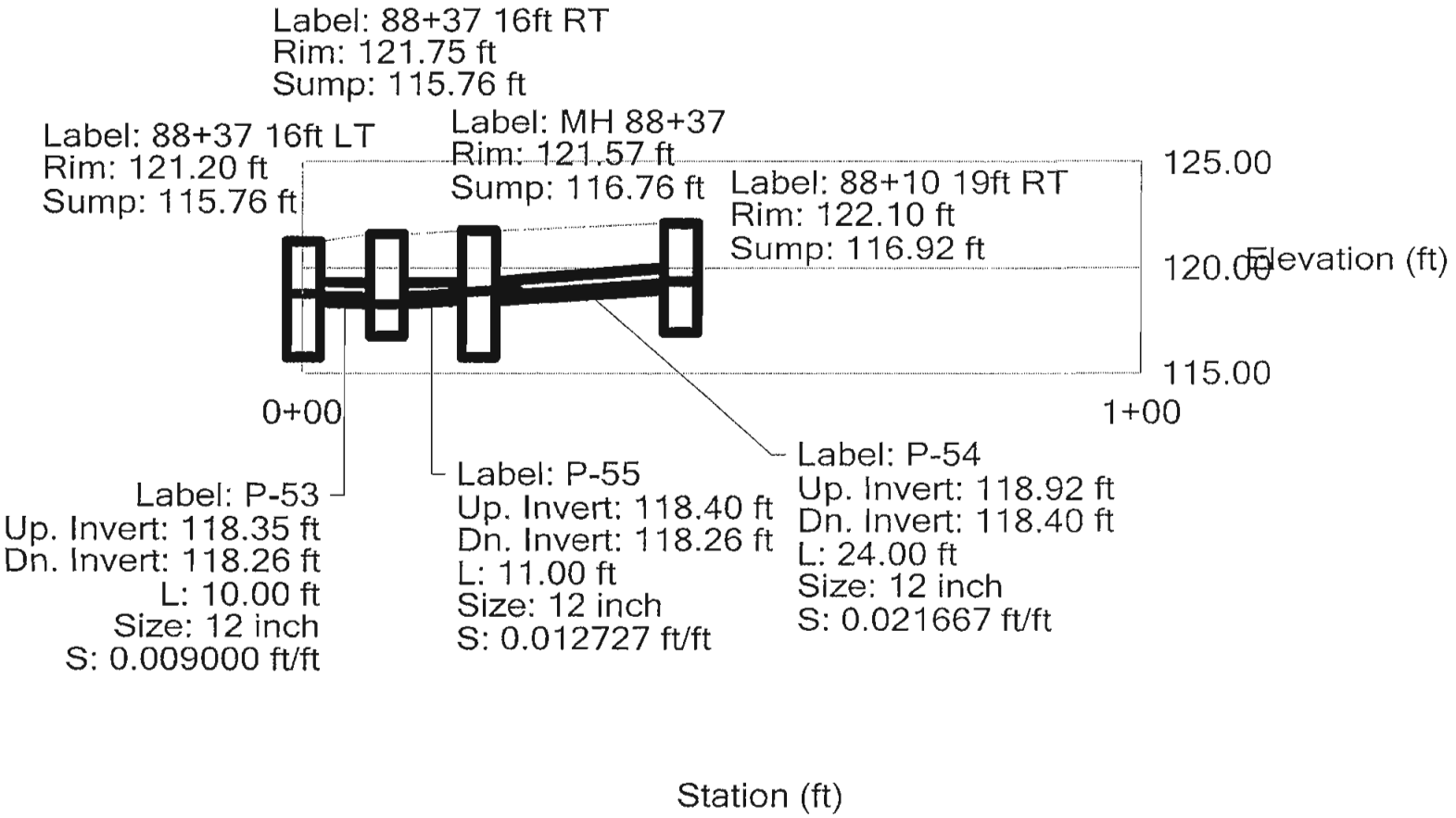

Profile: Profile - 4

Scenario: 10 Yr Event

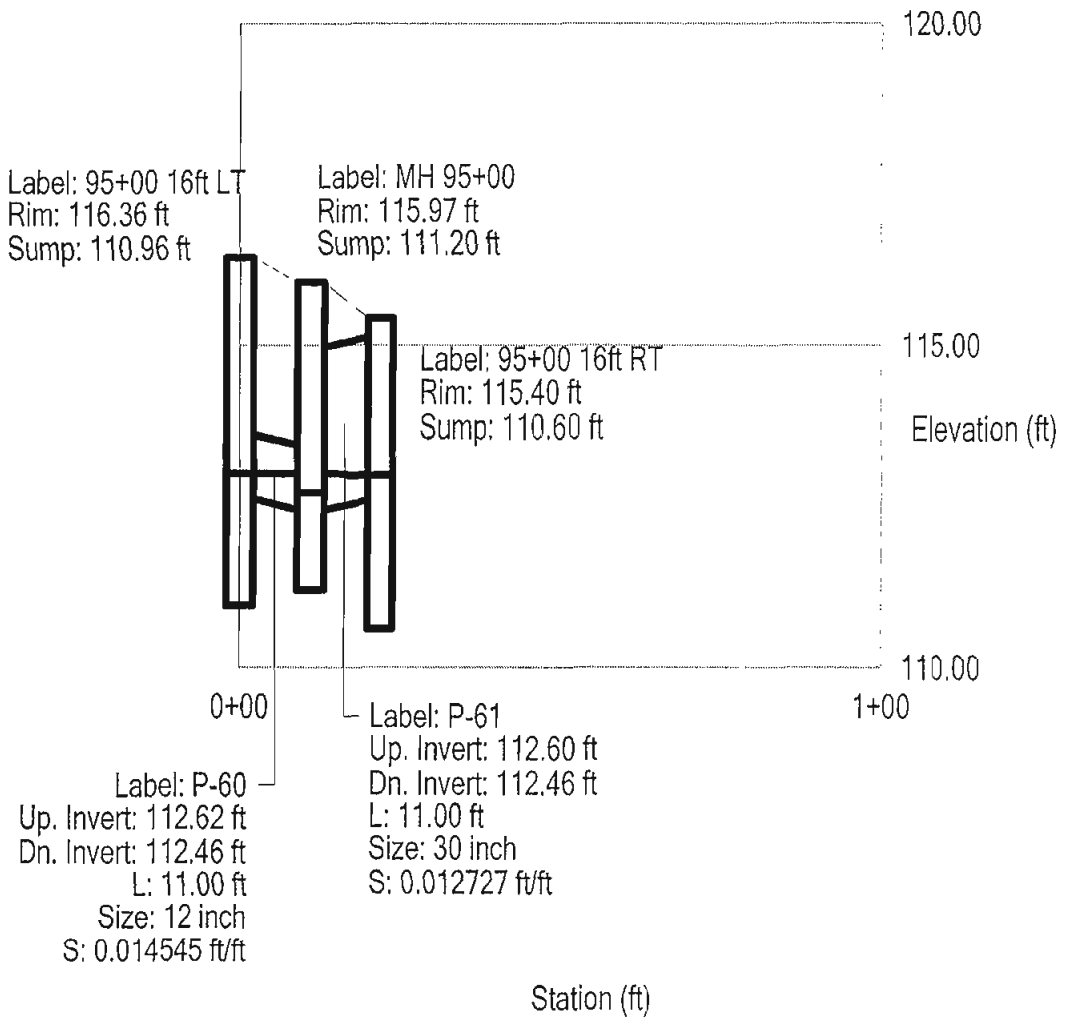

URS

Job HN-Busway | Project No. 36937231 | Page 1 of ___ | Sheet ___ of ___

Description Hydraulic Analysis For Slot Drain | Computed by DWS | Date 3/24/09

Checked by L Gao | Date 8/18/09

Reference

1. Inlet:

STA 46+50 16ft RT

STA 50+75 16ft RT

STA 51+75 16ft RT

STA 52+75 16ft RT

STA 59+21 16ft RT

TYPE "C" CB be used. (StormCAD)

For 4ft Gutter, More Intercept be Need

2. Inlet:

STA 46+50 16ft RT

STA 59+21 16ft RT

need divert outQ = 0.3 cfs

3. Inlet:

STA 50+75 16ft RT

STA 51+75 16ft RT

STA 52+75 16ft RT

Need divert outQ = 0.1 cfs.

URS

Page 2 of ____

Job HN - Busway | Project No. 36937231 | Sheet ____ of ____

Description Hydraulic Analysis For Slot Drain | Computed by DNS | Date 3/24/09

Checked by LGao | Date 8/18/09

Reference

4. Add extra Slotted inlet at upstream CB. inlet be considerated.

Per CONNDOT DRAINAGE MANUAL Chapter 9.

$$L_T = KQ^{0.42} S^{0.3} \left(\frac{1}{nS_x}\right)^{0.6} \quad (11.9)$$

$K = 0.6$

$Q = 0.3$, & 0.1 cfs

$S = 0.005$

$n = 0.016$

$S_x = 0.026$

So

for $Q = 0.3$ cfs

$$L_T = 0.6 \times 0.3^{0.42} \times 0.005^{0.3} \times \left(\frac{1}{0.016 \times 0.026}\right)^{0.6}$$

$= 7.88$ ft SAY 8 ft.

for $Q = 0.1$ cfs

$$L_T = 0.6 \times 0.1^{0.42} \times 0.005^{0.3} \times \left(\frac{1}{0.016 \times 0.026}\right)^{0.6}$$

$= 4.97$ SAY 5 ft.

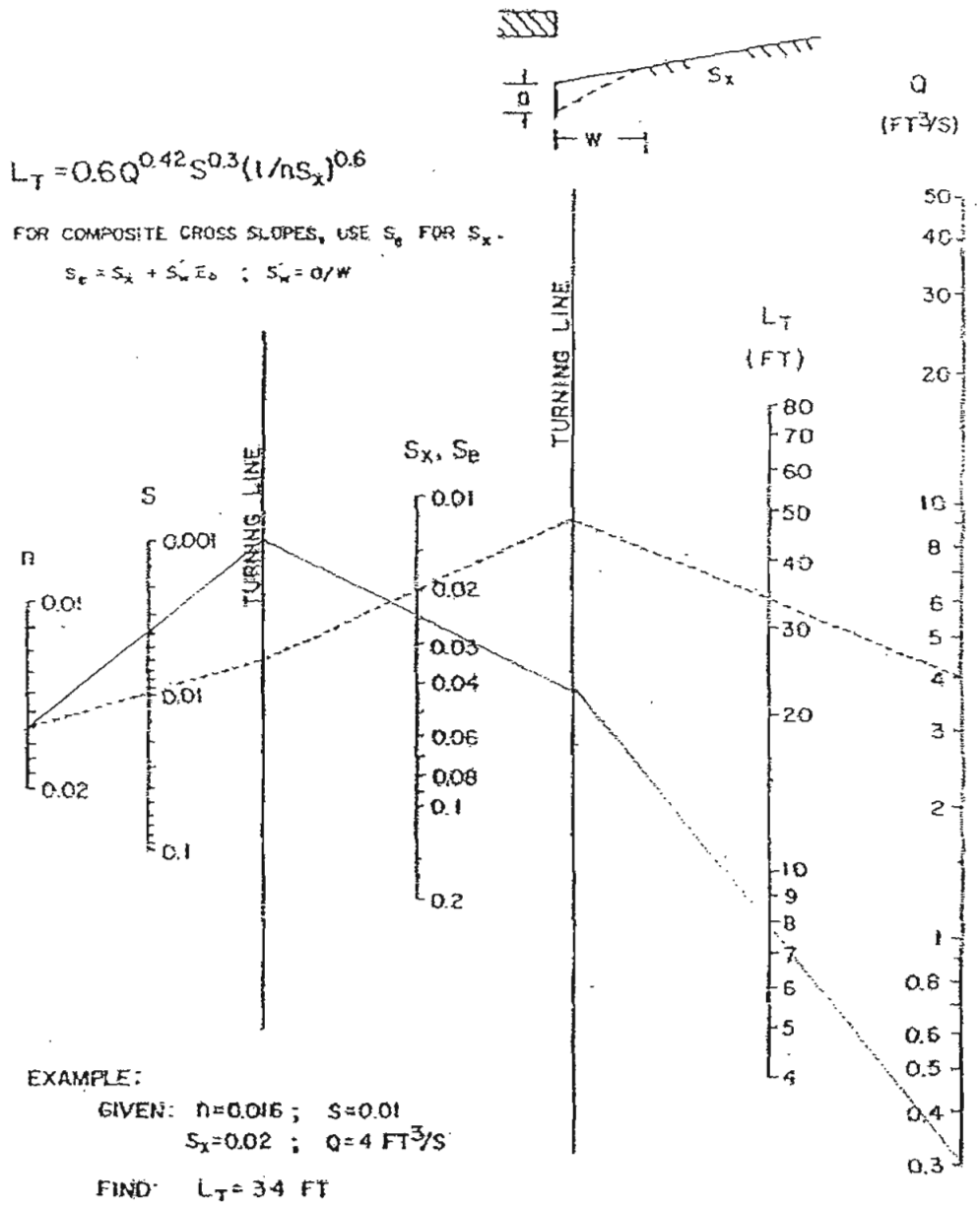

Figure 11-5.1 Curb Opening and Drain Inlet Length for Total Interception – English units

URS

Job HN - Busway
Description Hydraulic Analysis for Slot Drain

Project No. 36937231
Computed by DNS
Checked by L Gano

Page ____ of ____
Sheet ____ of ____
Date 3/24/09
Date 08/09/09
Reference

Item 0507021

TYPE "C" CB DBL - TYPE I

5000.00 EA

Item 0507026

TYPE "C" CB (4' sump)

2855.86 EA

Item 0651345

12" slotted drain pipe

75 LF

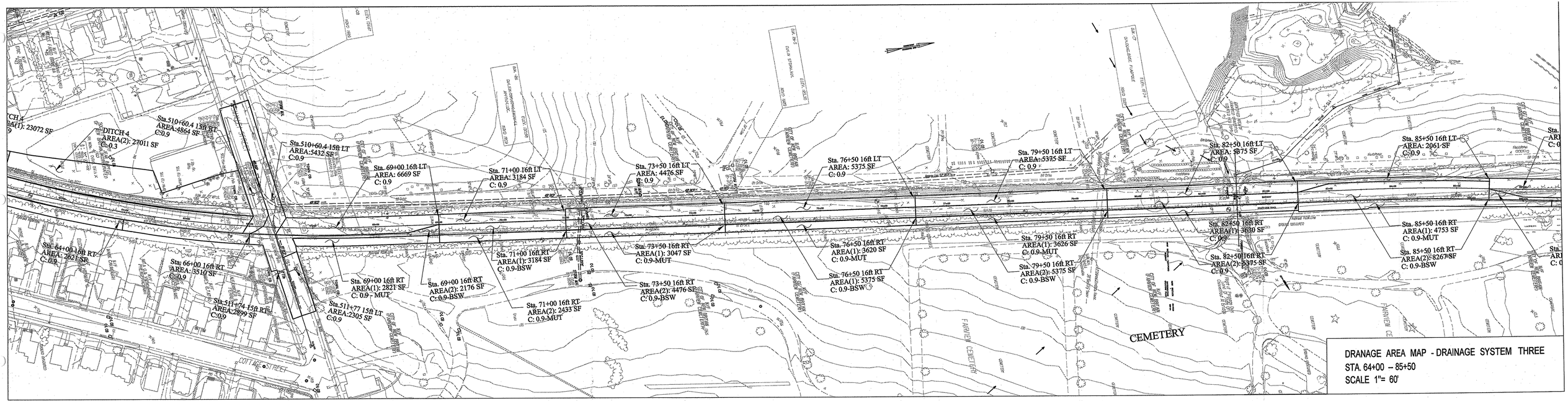

DRANAGE AREA MAP - DRAINAGE SYSTEM THREE

STA. 64+00 – 85+50

SCALE 1"= 60'

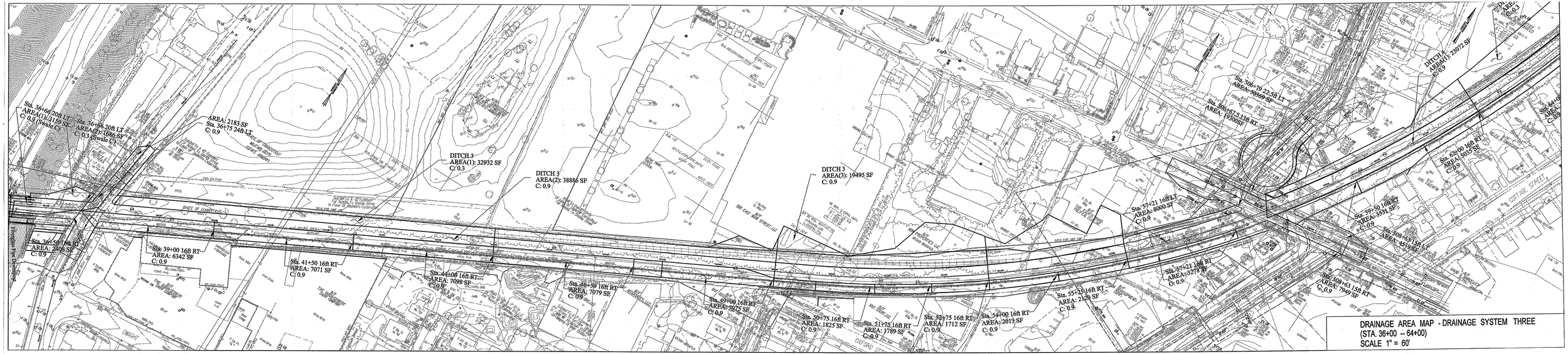
Sta. 36+60 20ft LT
AREA(1): 3159 SF
C: 0.9 (Swale C)
Sta. 36+98 20ft LT
AREA(2): 1886 SF
C: 0.9 (Swale C)
AREA: 2183 SF
Sta. 36+75 24ft LT
C: 0.9
DITCH 3
AREA(1): 32932 SF
C: 0.3
DITCH 3
AREA(2): 38886 SF
C: 0.9
DITCH 3
AREA(3): 19495 SF
C: 0.9
Sta. 36+50 19ft RT
AREA: 2808 SF
C: 0.9
Sta. 39+00 16ft RT
AREA: 6342 SF
C: 0.9
Sta. 41+50 16ft RT
AREA: 7071 SF
C: 0.9
Sta. 44+00 16ft RT
AREA: 7098 SF
C: 0.9
Sta. 46+50 16ft RT
AREA: 7079 SF
C: 0.9
Sta. 49+00 16ft RT
AREA: 2975 SF
C: 0.9
Sta. 50+75 16ft RT
AREA: 1825 SF
C: 0.9
Sta. 51+75 16ft RT
AREA: 1789 SF
C: 0.9
Sta. 52+75 16ft RT
AREA: 1712 SF
C: 0.9
Sta. 54+00 16ft RT
AREA: 2013 SF
C: 0.9
Sta. 55+25 16ft RT
AREA: 2120 SF
C: 0.9
Sta. 57+21 16ft LT
AREA: 8000 SF
C: 0.9
Sta. 57+21 16ft RT
AREA: 3278 SF
C: 0.9
Sta. 59+50 16ft RT
AREA: 3931 SF
C: 0.9
Sta. 60+00 16ft RT
AREA: 5035 SF
C: 0.9
Sta. 60+63 13ft RT
AREA: 4510 SF
C: 0.9
Sta. 60+63 15ft RT
AREA: 7949 SF
C: 0.9
Sta. 306+79 22.5ft LT
AREA: 20369 SF
Sta. 306+75 13ft RT
AREA: 13000SF
DITCH 4
AREA(1): 23072 SF
C: 0.9
Sta. 62+00 16ft RT
AREA: 5035 SF
C: 0.9
COTTAGE STREET
DRAINAGE AREA MAP - DRAINAGE SYSTEM THREE
(STA. 36+00 – 64+00)
SCALE 1" = 60'

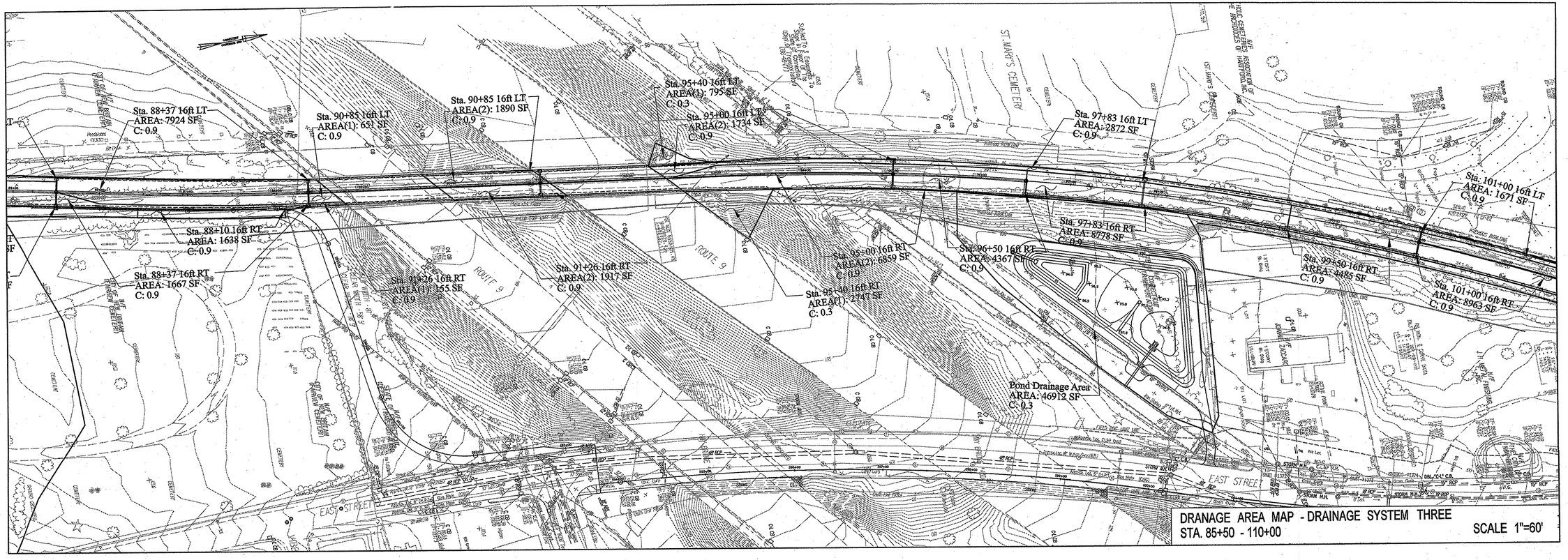
Sta. 88+37 16ft LT
AREA: 7924 SF
C: 0.9
Sta. 90+85 16ft LT
AREA(1): 651 SF
C: 0.9
Sta. 90+85 16ft LT
AREA(2): 1890 SF
C: 0.9
Sta. 95+40 16ft LT
AREA(1): 795 SF
C: 0.3
Sta. 95+00 16ft LT
AREA(2): 1734 SF
C: 0.9
Sta. 97+83 16ft LT
AREA: 2872 SF
C: 0.9
Sta. 101+00 16ft LT
AREA: 1671 SF
C: 0.9
Sta. 88+10 16ft RT
AREA: 1638 SF
C: 0.9
Sta. 88+37 16ft RT
AREA: 1667 SF
C: 0.9
Sta. 91+26 16ft RT
AREA(1): 155 SF
C: 0.9
Sta. 91+26 16ft RT
AREA(2): 1917 SF
C: 0.9
Sta. 95+00 16ft RT
AREA(2): 6859 SF
C: 0.9
Sta. 95+40 16ft RT
AREA(1): 2747 SF
C: 0.3
Sta. 96+50 16ft RT
AREA: 4367 SF
C: 0.9
Sta. 97+83 16ft RT
AREA: 8778 SF
C: 0.9
Sta. 99+50 16ft RT
AREA: 4485 SF
C: 0.9
Sta. 101+00 16ft RT
AREA: 8963 SF
C: 0.9
Pond Drainage Area
AREA: 46912 SF
C: 0.3
ST. MARY'S CEMETERY
ROUTE 9
EAST STREET
DRANAGE AREA MAP - DRAINAGE SYSTEM THREE
STA. 85+50 - 110+00
SCALE 1"=60'

Appendix C

Drainage System Four – Sta.110+00 to Sta.118+00

- Drainage Area Analysis
- Initial Tailwater Estimation
- Hydraulic Grade Line Analysis
- Drainage Area Maps

NEW BRITAIN-HARTFORD BUSWAY
New Britain to Hartford
URS PROJECT NO.36937230
DISCHARGE COMPUTATIONS - RATIONAL METHOD

URS

DESIGNED BY: DS DATE: 04/20/09
CHECKED BY: LGAO DATE:8/18/09
SHEET 1 OF 1

Catch Basin Label	Inlet Type	Bypass Target	Drainage Area (ACRE)	Tc (MIN)	I10 IN/HR	Impervious Coeff.	Impervious Area (ac)	Pervious Coeff.	Pervious Area (ac)	Weighted Runoff Coefficient	Q (CFS)
Trunk Line Three -Sta.110+00 To 118+00											
113+00 16ft LT	C-M	116+00 16ft LT	0.1236	5	6.0	0.9	0.1236	0.3		0.90	0.667
113+00 16ft RT	C-M	116+00 16ft RT	0.1236	5	6.0	0.9	0.1236	0.3		0.90	0.667
116+00 16ft LT	C-M	118+00 16ft LT	0.1236	5	6.0	0.9	0.1236	0.3		0.90	0.667
116+00 16ft RT	C-M	118+00 16ft RT	0.1236	5	6.0	0.9	0.1236	0.3		0.90	0.667
118+00 16ft LT	C-M	TO PROJ. NO.88-H034	0.0837	5	6.0	0.9	0.0837	0.3		0.90	0.452
118+00 16ft RT	C-M	TO PROJ. NO.88-H034	0.0884	5	6.0	0.9	0.0884	0.3		0.90	0.477
118+00 30ft LT	C-L	TO PROJ. NO.88-H034	1.6800	5	6.0	0.9	1.1200	0.3	0.5600	0.70	7.056
DITCH-5		TO PROJ. NO.88-H035	1.5368	10	4.8	0.9	0.1933	0.4	1.3435	0.46	3.415

URS

				Page	of
Job:	NH-BUSWAY	Project No.	36937231	Sheet	of
Description:	Initial Tailwater Estimation	Computed by	LGAO	Date	5/22/2010
ystem Four		Checked by	DS	Date	5/24/2010

System Four:

Outlet Pipe ID = 18 inch
Design Discharge = 11.27 cfs
Pipe Slope = 1%
dc (Critical depth) = 1.1 '
(dc + ID) / 2 = 1.3 ft
Tailwater is obtained from the downstream Project 088 - H034,
which is : 99.13 feet (10-yr strom event)

Scenario: 113+00 To 118+00

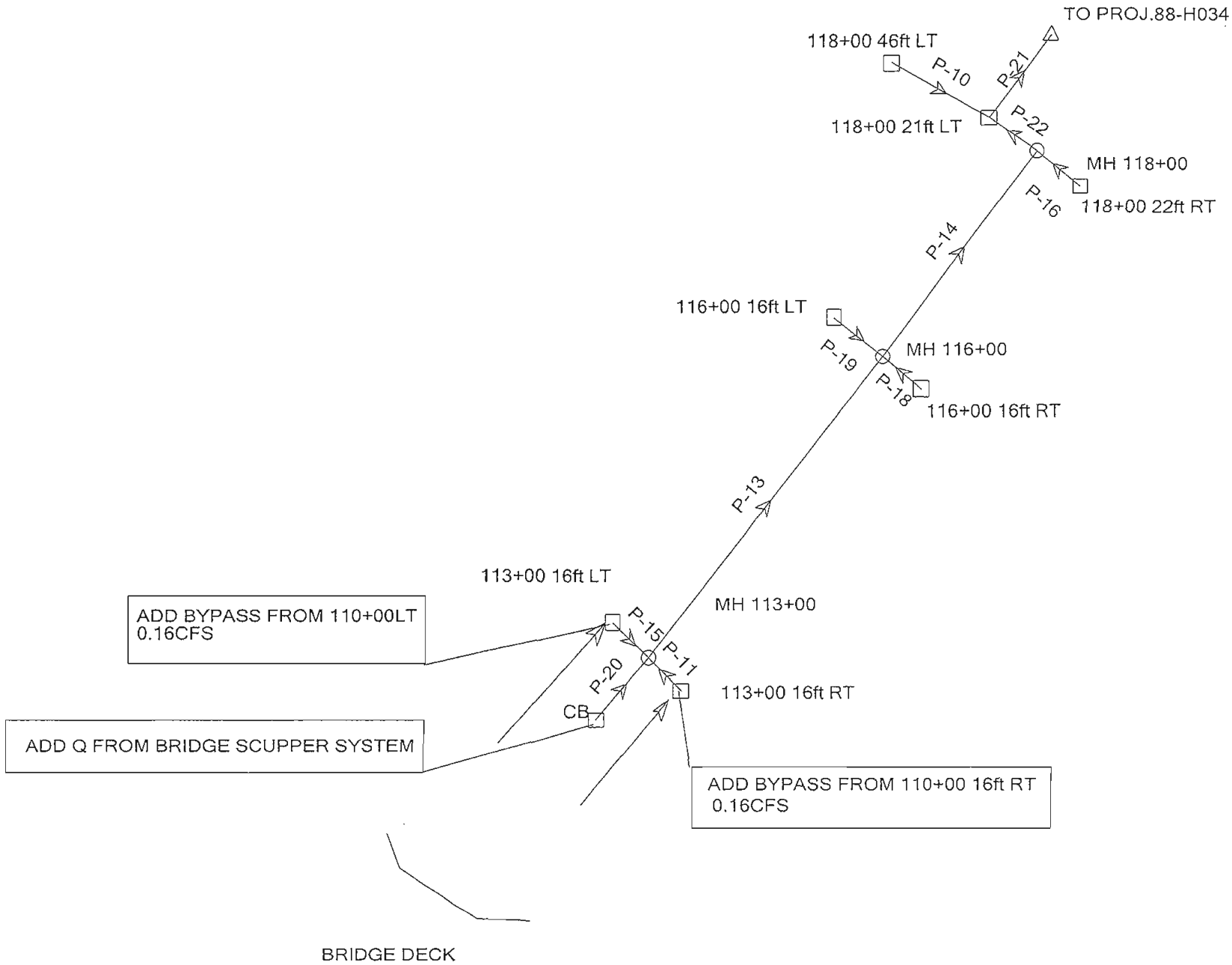

Scenari[illegible] +00 To 118+00

Gutter Flow Analysis (10 yr storm event)

Label	Inlet	Area (acres)	Inlet C	Local Tc (min)	Total Inlet CA (acres)	Total Flow To Inlet (cfs)	Longitudinal Slope (ft/ft)	Gutter Cross Slope (ft/ft)	Gutter Ditch Spread (ft)	Intercepted CA (acres)	Gutter Ditch Depth (ft)	Total Bypassed Flow (cfs)	Bypassed CA (acres)	Clogging Factor (%)
113+00 16ft L	Grate Type RPW - Grate Type A	0.1200	0.90	5.00	0.1080	0.81	0.042000	0.040	3.31	0.0798	0.13	0.21	0.0282	50.0
113+00 16ft F	Grate Type RPW - Grate Type A	0.1200	0.90	5.00	0.1080	0.81	0.042000	0.040	3.31	0.0798	0.13	0.21	0.0282	50.0
116+00 16ft L	Grate Type RPW - Grate Type A	0.1200	0.90	5.00	0.1362	0.87	0.042000	0.040	3.39	0.0985	0.14	0.24	0.0377	50.0
116+00 16ft F	Grate Type RPW - Grate Type A	0.1200	0.90	5.00	0.1362	0.87	0.042000	0.040	3.39	0.0985	0.14	0.24	0.0377	50.0
118+00 21ft L	Combination Type C-M - Grate Type A	0.0800	0.90	5.00	0.1475	0.91	0.042000	0.040	3.46	0.1107	0.14	0.23	0.0368	0.0
118+00 22ft F	Grate Type RPW - Grate Type A	0.0900	0.90	5.00	0.0810	0.49	0.042000	0.040	2.74	0.0677	0.11	0.08	0.0133	50.0
118+00 46ft L	Generic Default 100%	1.5368	0.46	10.00	0.7069	3.42		0.020	0.00	0.7069	0.00	0.00	0.0000	
CB	Generic Default 100%	0.0000	0.00	0.00	0.0000	0.00		0.020	0.00	0.0000	0.00	0.00	0.0000	

Scenario +00 To 118+00

DOT Report

Upstream Node	Downstream Node	Pipe Flow Time (min)	System Flow Time (min)	Upstream Inlet CA (acres)	System CA (acres)	System Intensity (in/hr)	Section Size	Material	Mannings n	Length (ft)	Upstream Invert Elevation (ft)	Downstream Invert Elevation (ft)	Constructed Slope (ft/ft)	Full Capacity (cfs)	Total System Flow (cfs)	Average Velocity (ft/s)
118+00 46ft LT	118+00 21ft L	0.09	15.00	0.7069	1.8869	4.00	18 inch	Concrete	0.013	30.00	98.30	98.10	0.006667	8.58	7.61	5.48
113+00 16ft RT	MH 113+00	0.07	5.00	0.1080	0.0798	6.00	12 inch	Concrete	0.013	15.00	121.20	121.05	0.010000	3.56	0.60	3.37
MH 113+00	MH 116+00	0.57	5.47	N/A	0.4610	5.91	12 inch	Concrete	0.013	300.00	121.05	108.40	0.042167	7.32	2.98	8.84
MH 116+00	MH 118+00	0.33	6.04	N/A	0.6580	5.79	12 inch	Concrete	0.013	200.00	108.40	99.00	0.047000	7.72	4.14	10.00
113+00 16ft LT	MH 113+00	0.07	5.00	0.1080	0.0798	6.00	12 inch	Concrete	0.013	15.00	121.20	121.05	0.010000	3.56	0.60	3.37
118+00 22ft RT	MH 118+00	0.17	5.00	0.0810	0.0677	6.00	12 inch	Concrete	0.013	30.00	99.68	99.38	0.010000	3.56	0.41	3.02
116+00 16ft RT	MH 116+00	0.07	5.00	0.1080	0.0985	6.00	12 inch	Concrete	0.013	15.00	108.60	108.40	0.013333	4.11	0.63	3.78
116+00 16ft LT	MH 116+00	0.07	5.00	0.1080	0.0985	6.00	12 inch	Concrete	0.013	15.00	108.60	108.40	0.013333	4.11	0.63	3.78
CB	MH 113+00	0.04	5.43	0.0000	0.3015	5.91	12 inch	Concrete	0.013	20.00	121.90	121.05	0.042500	7.34	1.80	7.73
118+00 21ft LT	TO PROJ.88-	0.02	15.09	0.0720	2.7234	3.99	18 inch	Concrete	0.013	8.00	97.90	97.82	0.010000	10.50	11.27	6.63
MH 118+00	118+00 21ft L	0.06	6.37	N/A	0.7257	5.69	18 inch	Concrete	0.013	20.00	98.30	98.10	0.010000	10.50	4.46	5.70

© Bentley Systems, Inc. Haestad Methods Solution Center Watertown, CT 06795 USA +1-203-755-1666

Pipe Report

Label	Upstream Node	Downstream Node	Section Size	Length (ft)	Cons Slope (ft/ft)	Total System Flow (cfs)	Full Capacity (cfs)	Average Velocity (ft/s)	Hydraulic Grade Line Out (ft)	Hydraulic Grade Line In (ft)	Upstream Invert Elevation (ft)	Downstream Invert Elevation (ft)	Upstream Ground Elevation (ft)	Downstream Ground Elevation (ft)	Upstream Cover (ft)	Downstream Cover (ft)	Mannings n
P-10	118+00 46ft	118+00 21ft L	18 inch	30.00	0.006667	7.61	8.58	5.48	99.54	99.65	98.30	98.10	101.30	103.46	1.50	3.86	0.013
P-11	113+00 16ft	MH 113+00	12 inch	15.00	0.010000	0.60	3.56	3.37	121.83	121.83	121.20	121.05	124.49	124.89	2.29	2.84	0.013
P-13	MH 113+00	MH 116+00	12 inch	300.00	0.042167	2.98	7.32	8.84	109.40	121.79	121.05	108.40	124.89	112.27	2.84	2.87	0.013
P-14	MH 116+00	MH 118+00	12 inch	200.00	0.047000	4.14	7.72	10.00	99.52	109.26	108.40	99.00	112.27	103.86	2.87	3.86	0.013
P-15	113+00 16ft	MH 113+00	12 inch	15.00	0.010000	0.60	3.56	3.37	121.83	121.83	121.20	121.05	124.49	124.89	2.29	2.84	0.013
P-16	118+00 22ft	MH 118+00	12 inch	30.00	0.010000	0.41	3.56	3.02	99.61	99.94	99.68	99.38	103.28	103.86	2.60	3.48	0.013
P-18	116+00 16ft	MH 116+00	12 inch	15.00	0.013333	0.63	4.11	3.78	109.31	109.30	108.60	108.40	111.87	112.27	2.27	2.87	0.013
P-19	116+00 16ft	MH 116+00	12 inch	15.00	0.013333	0.63	4.11	3.78	109.30	109.30	108.60	108.40	111.87	112.27	2.27	2.87	0.013
P-20	CB	MH 113+00	12 inch	20.00	0.042500	1.80	7.34	7.73	121.89	122.47	121.90	121.05	126.00	124.89	3.10	2.84	0.013
P-21	118+00 21ft	TO PROJ.88-	18 inch	8.00	0.010000	11.27	10.50	6.63	99.13	99.23	97.90	97.82	103.46	103.00	4.06	3.68	0.013
P-22	MH 118+00	118+00 21ft L	18 inch	20.00	0.010000	4.46	10.50	5.70	99.35	99.34	98.30	98.10	103.86	103.46	4.06	3.86	0.013

file
Scenario: 113+00 To 118+00

Profile: Profile - 1

Scenario: 113+00 To 118+00

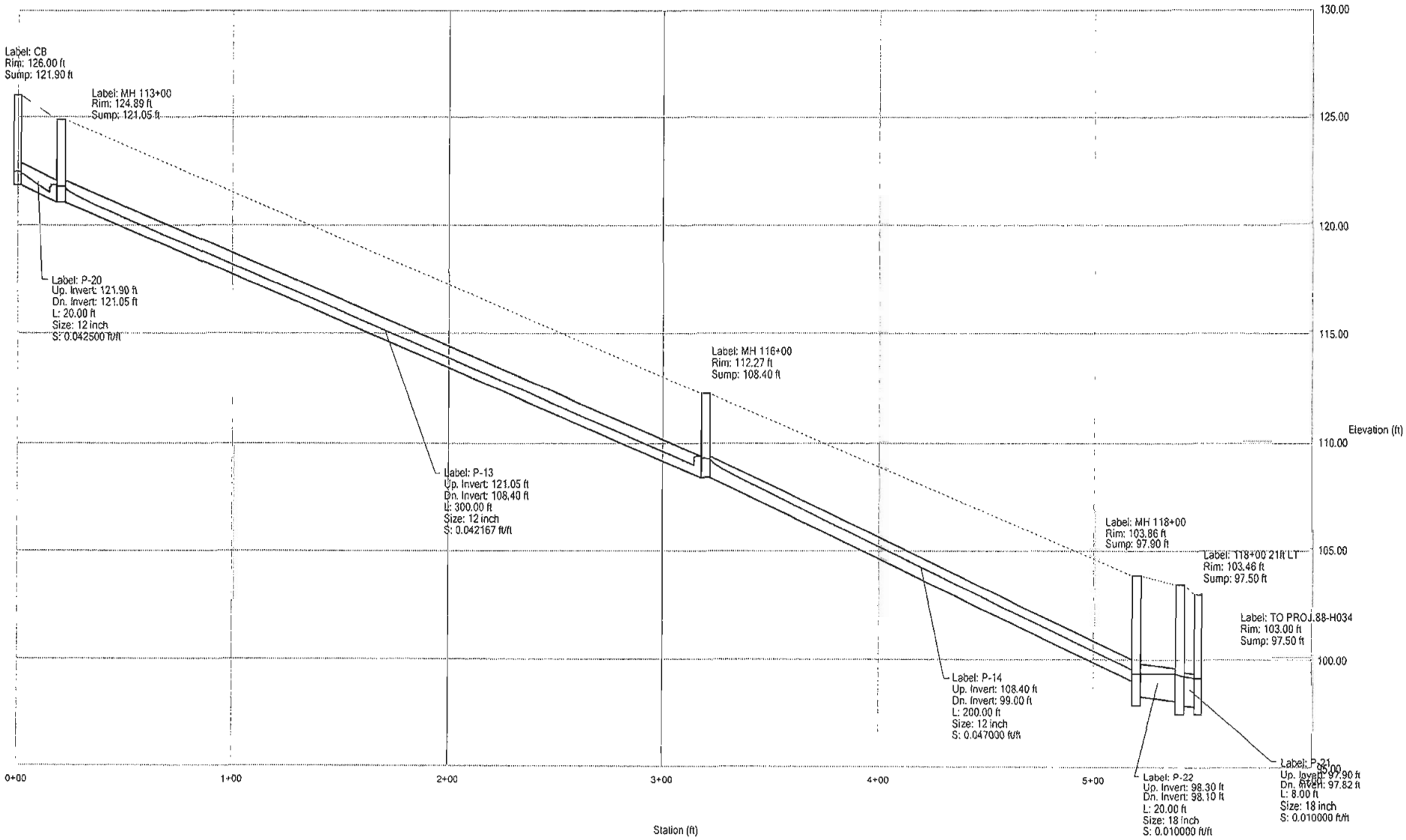

Title: Busway
p:\...\final design\stormcad\sta-110-118.stm
05/24/10 08:17:44 AM

URS CorporationRocky Hill
© Bentley Systems, Inc. Haestad Methods Solution Center Watertown, CT 06795 USA +1-203-755-1666

Project Engineer: Li Gao
StormCAD v5.6 [05.06.014.00]
Page 1 of 1

Profile: Profile - 2

Scenario: 113+00 To 118+00

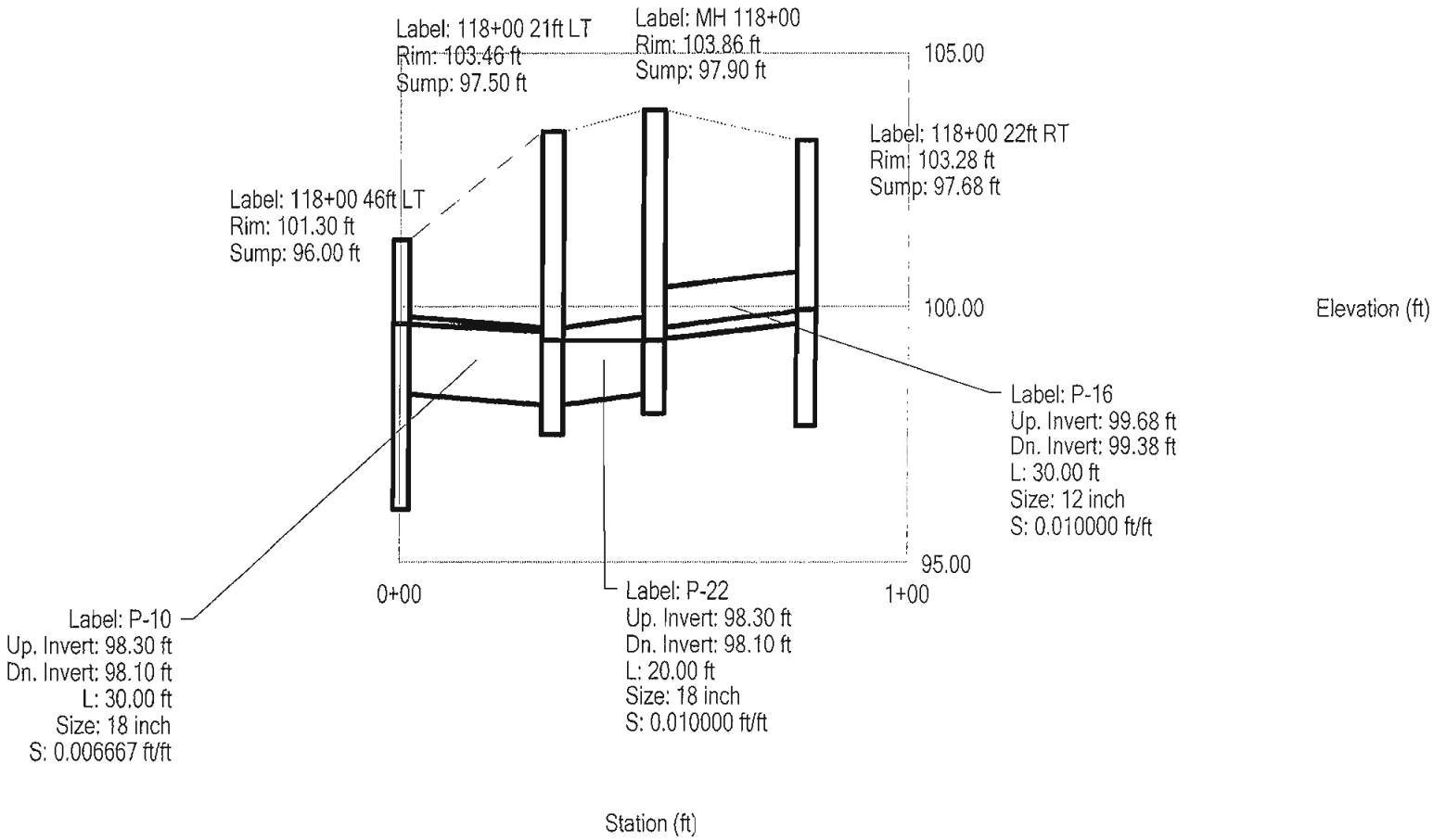

Profile: Profile - 3

Scenario: 113+00 To 118+00

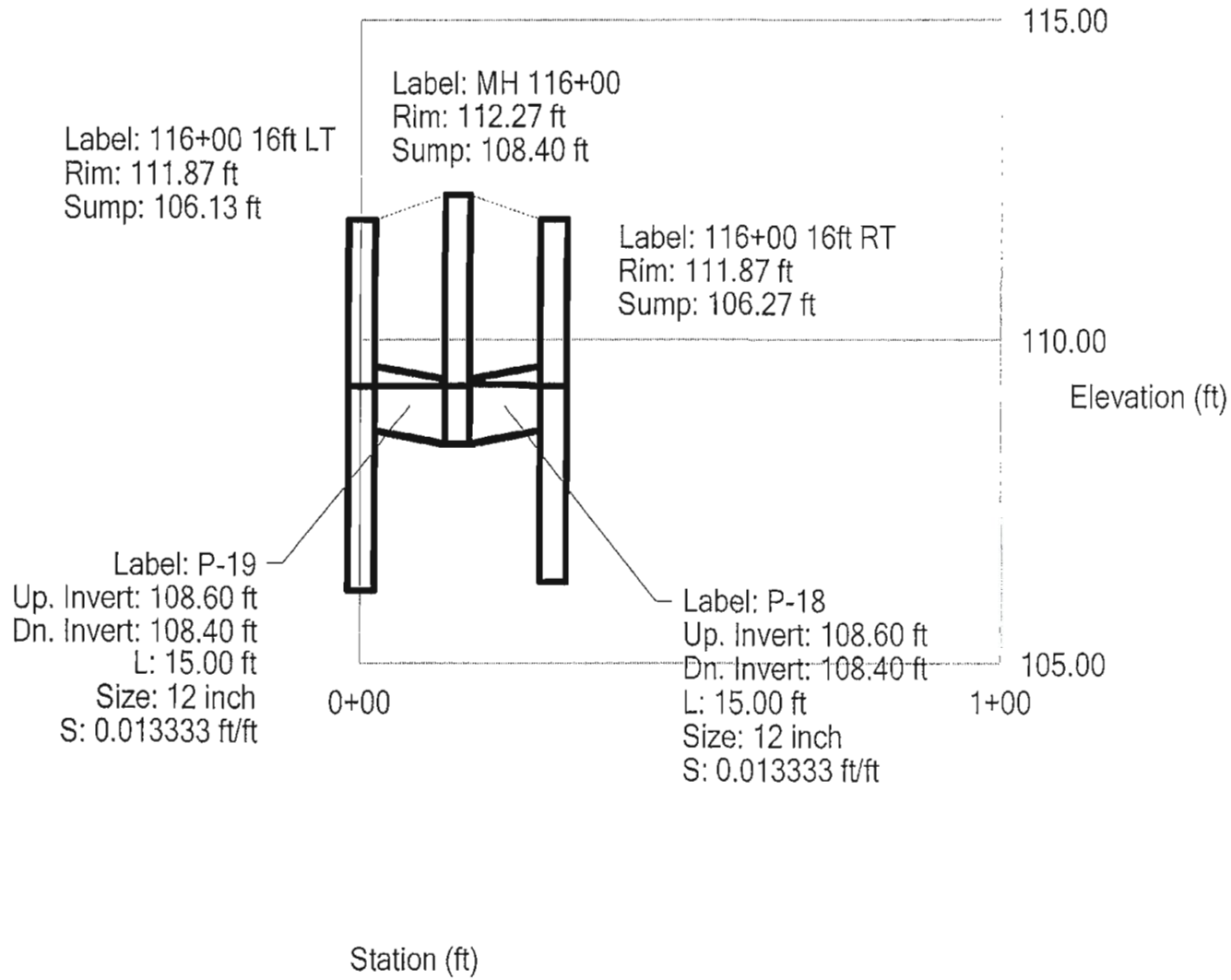

Profile: Profile - 4

Scenario: 113+00 To 118+00

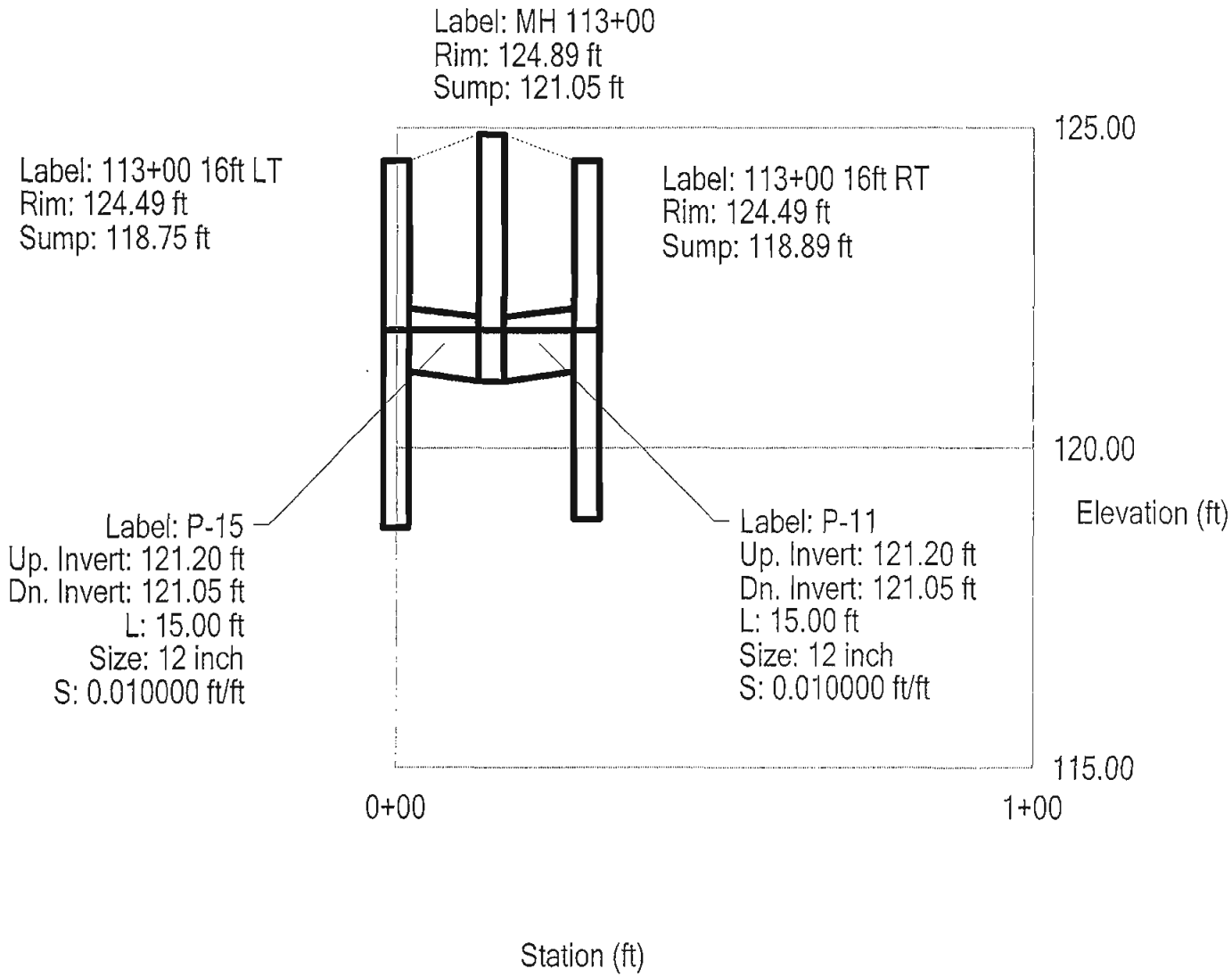

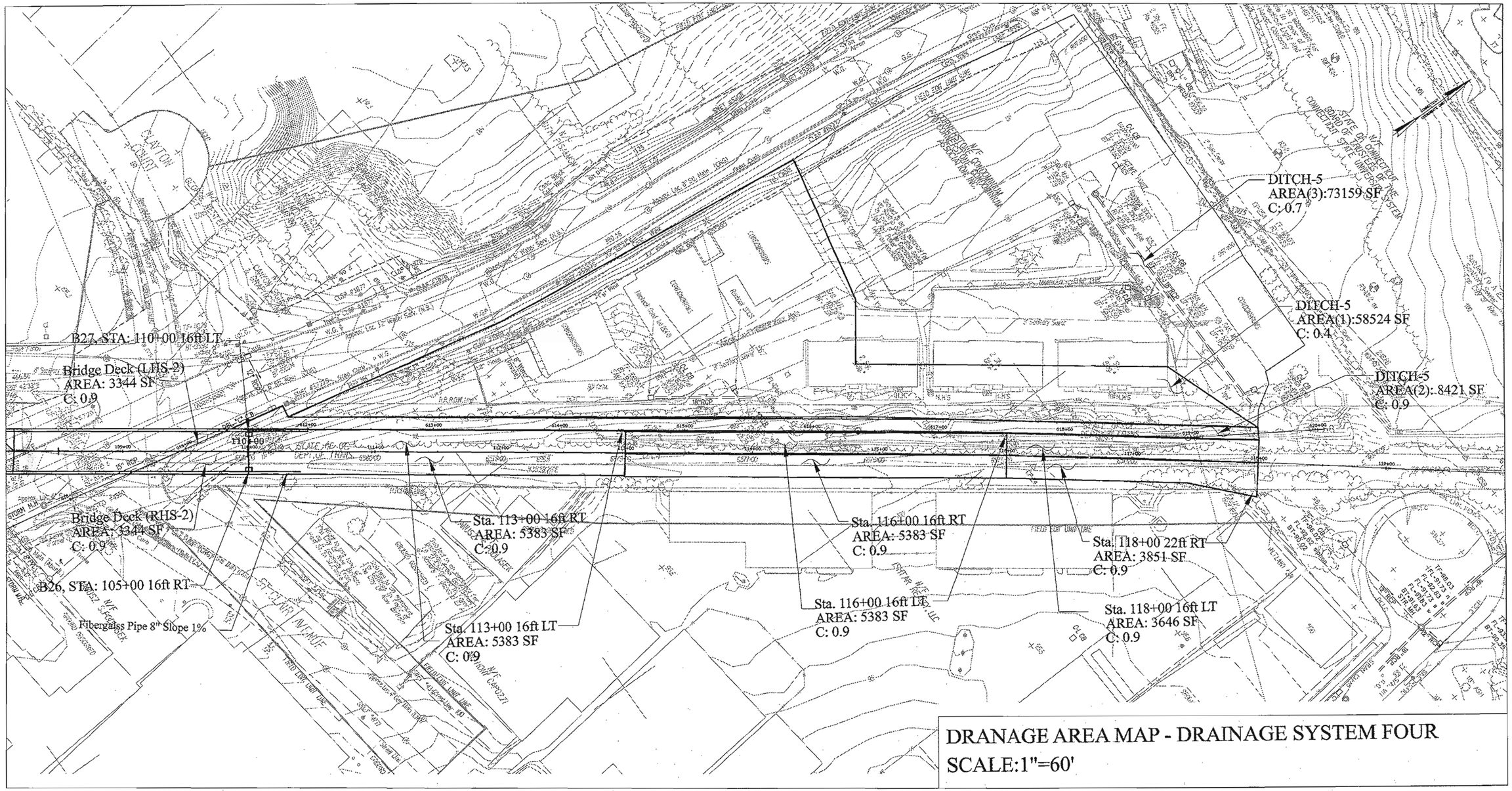

DRANAGE AREA MAP - DRAINAGE SYSTEM FOUR

SCALE:1"=60'

Appendix D

Drainage System Five – Route 72 Exit Ramp & Route 9 SB Entrance Ramp

- Drainage Area Analysis
- Initial Tailwater Estimation
- Hydraulic Grade Line Analysis
- Hydraulic Analysis for the 120 feet 48" RCP
- Drainage Area Maps

NEW BRITAIN-HARTFORD BUSWAY
New Britain to Rte.72 Exit Ramp
URS PROJECT NO.36937230
DISCHARGE COMPUTATIONS - RATIONAL METHOD

URS

DESIGNED BY: DS DATE: 5/14/2009
CHECKED BY:LGAO DATE: 08/18/2009
SHEET 1 OF 1

Station	Catch Basin Label	Drainage Area (ft^2)	Drainage Area (ACRE)	Tc (MIN)	I10 (IN/HR)	Impervious Coeff.	Impervious Area (ft^2)	Pervious Coeff.	Pervious Area (ft^2)	Weighted Runoff Coefficient	Q (CFS)
ROUTE 72 EB EXIT RAMP AREA EXISTING DRAINAGE MAP											
	CB1	20,007	0.46	10	4.8	0.9	9,331	0.3	10,676	0.58	1.3
	CB2	24,800	0.57	10	4.8	0.9	606	0.3	24,194	0.31	0.9
	CB3	39,723	0.91	10	4.8	0.9	1,471	0.3	38,252	0.32	1.4
	CB4	27,785	0.64	10	4.8	0.9	736	0.3	27,049	0.32	1.0
	CB5	5,806	0.13	5	6.0	0.9	5,806	0.3	0	0.90	0.7
	CB6	18,556	0.43	5	6.0	0.9	3,178	0.3	15,378	0.40	1.0
	CB7	6,078	0.14	5	6.0	0.9	6,078	0.3	0	0.90	0.8
	BYPASS TOCB7										0.8
	Ex Area for Ditch 7	32,371	0.74	10	4.8	0.9	0	0.3	32,371	0.30	1.1
	Ex Area for Ditch 8	18,402	0.42	10	4.8	0.9	6,072	0.3	12,330	0.50	1.0
Total Existing		**193,528**	**4.44**				**27,206**		**166,322**		**9.9**
ROUTE 72 EB EXIT RAMP AREA PROPOSED DRAINAGE MAP											
	CB2	22,454	0.52	10	4.8	0.9	1,998	0.3	20,456	0.35	0.9
	CB4	5,191	0.12	10	4.8	0.9	800	0.3	4,391	0.39	0.2
208+97.1	CB-A	6,844	0.16	5	6.0	0.9	5,953	0.3	891	0.82	0.8
208+00	CB-AA	50,451	1.16	10	4.8	0.9	27,375	0.3	23,076	0.63	3.5
311+01	CB-AA-1	3,510	0.08	10	4.8	0.9	255	0.3	3,255	0.34	0.1
312+48	CB-AA-2	3,129	0.07	10	4.8	0.9	255	0.3	2,874	0.35	0.1
206+75	CB-B	12,900	0.30	10	4.8	0.9	5,250	0.3	7,650	0.54	0.8
205+60	CB-CCC	1,750	0.04	5	6.0	0.9	551	0.3	1,199	0.49	0.1
205+30	CB-CC	8,275	0.19	5	6.0	0.9	8,275	0.3	0	0.90	1.0
	BYPASS TO CB-CC										0.6
205+30	CB-C	6,030	0.14	10	4.8	0.9	3,687	0.3	2,343	0.67	0.4
203+80	CB-D	19,385	0.45	10	4.8	0.9	8,666	0.3	10,719	0.57	1.2
	Pro Area for Ditch 7	32,371	0.74	10	4.8	0.9	0	0.3	32,371	0.30	1.1
	Pro Area for Ditch 8	15,900	0.37	10	4.8	0.9	6,072	0.3	9,828	0.53	0.9
Total Proposed		**181,551**	**4.17**				**62,555**		**70,725**		**11.5**

NOTE: Q FOR CB-B OUTLET = Q(CB-B)+Q(CB-AA) *MINUS UNDERGROUND DETENTION*=4.3CFS-2CFS=2.3CFS

URS

				Page	of
Job:	NH-BUSWAY	Project No.	36937231	Sheet	of
Description:	Initial Tailwater Estimation	Computed by	LGAO	Date	9/24/2009
System Five		Checked by	DS	Date	9/24/2009

System Five:

Outlet Pipe 5-1 ID = 18 inch
Design Discharge = 2.52 cfs
Pipe Slope = .5%
dc (Critical depth) = .6 '
(dc + ID) / 2 = 1.1 ft
To be conservative, the outlet crown elevation is chosen as the design tailwater elevation, which is : 152.66 feet

Outlet Pipe 5-2 ID = 18 inch
Design Discharge = 4.20 cfs
Pipe Slope = 1%
dc (Critical depth) = .8 '
(dc + ID) / 2 = 1.2 ft
To be conservative, the outlet crown elevation is chosen as the design tailwater elevation, which is : 152.19 feet

O-1 Outlet Pipe ID = 12 inch
Design Discharge = 0.68 cfs
Pipe Slope =5%
dc (Critical depth) = .34 '
(dc + ID) / 2 = 0.67 ft
To be conservative, the outlet crown elevation is chosen as the design tailwater elevation, which is : 170 feet

Outlet Pipe 5-4 ID = 12 inch
Design Discharge = 1.05 cfs
Pipe Slope =11%
dc (Critical depth) = .43 '
(dc + ID) / 2 = 0.72 ft
To be conservative, the outlet crown elevation is chosen as the design tailwater elevation, which is : 162.5 feet

Scenario: RTE 72 EXIT RAMP&RTE 9 ENTRANCE RAMP

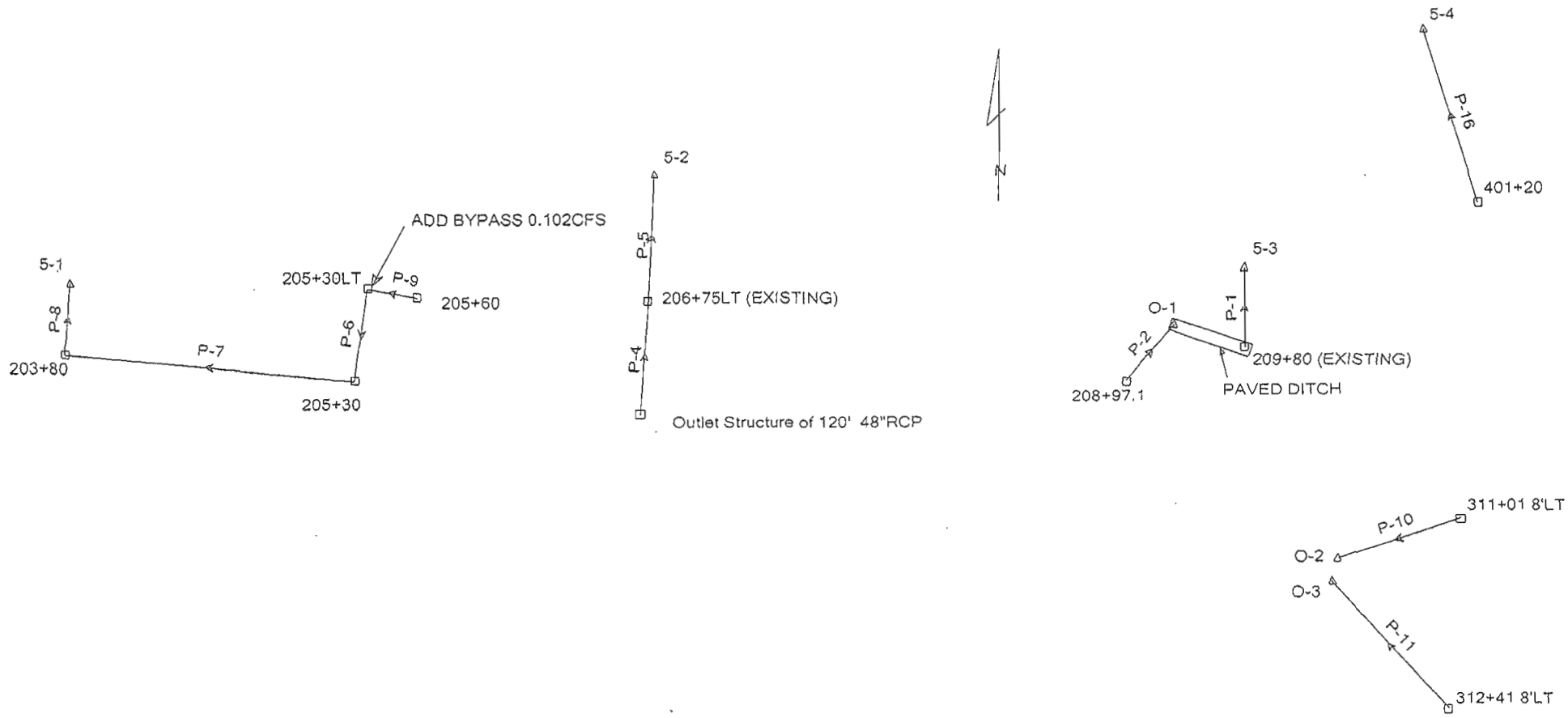

Scenario: RTE 72 EXIT R[illegible]P&RTE 9 ENTRANCE RAMP

Gutter Flow Analysis (10 yr storm event)

Label	Inlet	Area (acres)	Inlet C	Local Tc (min)	Total Inlet CA (acres)	Total Flow To Inlet (cfs)	Longitudinal Slope (ft/ft)	Gutter Cross Slope (ft/ft)	Gutter Ditch Spread (ft)	Intercepted CA (acres)	Gutter Ditch Depth (ft)	Total Bypassed Flow (cfs)	Bypassed CA (acres)	Clogging Factor (%)
203+80	Grate Type C-L Single Grate - Grate Type A	0.4450	0.57	10.00	0.2536	1.23		0.020	11.26	0.2536	0.23	0.00	0.0000	50.0
205+30	Grate Type C-L Single Grate - Grate Type A	0.1384	0.67	10.00	0.0927	0.45		0.020	6.40	0.0927	0.13	0.00	0.0000	50.0
205+30LT	Combination Type C - Grate Type A - Plain Curb	0.1900	0.90	5.00	0.1710	1.03	005000	0.040	5.39	0.1407	0.22	0.18	0.0303	0.0
205+60	Grate Type C-L Single Grate - Grate Type A	0.0402	0.49	5.00	0.0197	0.12		0.020	3.28	0.0197	0.07	0.00	0.0000	40.0
206+75LT (E)	Grate Type C-L Single Grate - Grate Type A	0.5155	0.35	10.00	0.2271	1.10		0.019	11.04	0.2271	0.21	0.00	0.0000	50.0
208+97.1	Combination Type C Single Grate - Grate Type A - P	0.1571	0.82	5.00	0.1288	0.78	070000	0.040	3.33	0.1124	0.13	0.10	0.0164	0.0
209+80 (EXIS	Grate Type C-L Single Grate - Grate Type A	0.1192	0.39	10.00	0.0465	0.22		0.020	4.12	0.0465	0.08	0.00	0.0000	25.0
311+01 8'LT	Grate Type C-L Single Grate - Grate Type A	0.0800	0.38	10.00	0.0300	0.15		0.020	3.38	0.0300	0.07	0.00	0.0000	25.0
312+41 8'LT	Grate Type C-L Single Grate - Grate Type A	0.0800	0.38	10.00	0.0300	0.15		0.020	3.38	0.0300	0.07	0.00	0.0000	25.0
401+20	Generic Default 100%	0.4800	0.45	10.00	0.2160	1.05		0.020	0.00	0.2160	0.00	0.00	0.0000	
Outlet Structu	Grate Type C-L Single Grate - Grate Type A	0.2961	0.54	10.00	0.1599	0.77		0.040	4.52	0.1599	0.18	0.00	0.0000	25.0

Scenario: RTE 72 EXIT R[illegible]P&RTE 9 ENTRANCE RAMP

DOT Report

Upstream Node	Downstream Node	Pipe Flow Time (min)	System Flow Time (min)	Upstream Inlet CA (acres)	System CA (acres)	System Intensity (in/hr)	Section Size	Material	Mannings n	Length (ft)	Upstream Invert Elevation (ft)	Downstream Invert Elevation (ft)	Constructed Slope (ft/ft)	Full Capacity (cfs)	Total System Flow (cfs)	Average Velocity (ft/s)
209+80 (EXISTIN	5-3	0.08	10.00	0.0465	0.0465	4.80	15 inch	CMP	0.024	36.00	164.70	154.68	0.278333	18.46	0.90	7.79
208+97.1	O-1	0.09	5.00	0.1288	0.1124	6.00	12 inch	CMP	0.024	22.00	170.00	169.00	0.045455	4.11	0.68	3.87
Outlet Structure (	206+75LT (EX	0.14	10.00	0.1599	0.1599	4.80	12 inch	Concrete	0.013	54.00	157.00	156.00	0.018519	4.85	3.10	6.55
206+75LT (EXIS	5-2	0.27	10.14	0.1804	0.3870	4.79	18 inch	CMP	0.024	60.00	151.85	151.19	0.011000	5.97	4.20	3.66
205+30LT	205+30	0.21	5.13	0.1710	0.1604	5.97	12 inch	Concrete	0.013	42.00	152.75	152.50	0.005952	2.75	1.07	3.28
205+30	203+80	0.75	10.00	0.0927	0.2531	4.80	12 inch	Concrete	0.013	144.00	152.50	151.80	0.004861	2.48	1.33	3.21
203+80	5-1	0.14	10.75	0.2536	0.5068	4.73	18 inch	Concrete	0.013	31.00	151.80	151.66	0.004516	7.06	2.52	3.66
205+60	205+30LT	0.13	5.00	0.0197	0.0197	6.00	12 inch	Concrete	0.013	23.00	153.40	152.75	0.028261	5.99	0.12	3.01
311+01 8'LT	O-2	0.28	10.00	0.0300	0.0300	4.80	12 inch	CMP	0.024	64.00	184.90	175.00	0.154688	7.59	0.15	3.78
312+41 8'LT	O-3	0.45	10.00	0.0300	0.0300	4.80	12 inch	CMP	0.024	89.00	184.60	175.00	0.107865	6.34	0.15	3.33
401+20	5-4	0.32	10.00	0.2160	0.2160	4.80	12 inch	CMP	0.024	118.00	175.00	161.50	0.114407	6.53	1.05	6.09

Scenario: RTE 72 EXIT R P&RTE 9 ENTRANCE RAMP

Pipe Report

Label	Upstream Node	Downstream Node	Section Size	Length (ft)	Cons Slope (ft/ft)	Total System Flow (cfs)	Full Capacity (cfs)	Average Velocity (ft/s)	Hydraulic Grade Line Out (ft)	Hydraulic Grade Line In (ft)	Upstream Invert Elevation (ft)	Downstream Invert Elevation (ft)	Upstream Ground Elevation (ft)	Downstream Ground Elevation (ft)	Upstream Cover (ft)	Downstream Cover (ft)	Mannings n
P-1	209+80 (EXI	5-3	15 inch	36.00	0.278333	0.90	18.46	7.79	155.93	165.07	164.70	154.68	168.65	160.31	2.70	4.38	0.024
P-2	208+97.1	O-1	12 inch	22.00	0.045455	0.68	4.11	3.87	170.00	170.34	170.00	169.00	176.43	169.00	5.43	-1.00	0.024
P-4	Outlet Struct	206+75LT (E	12 inch	54.00	0.018519	3.10	4.85	6.55	156.58	157.76	157.00	156.00	166.23	158.78	8.23	1.78	0.013
P-5	206+75LT (E	5-2	18 inch	60.00	0.011000	4.20	5.97	3.66	152.69	152.96	151.85	151.19	158.78	160.00	5.43	7.31	0.024
P-6	205+30LT	205+30	12 inch	42.00	0.005952	1.07	2.75	3.28	153.43	153.45	152.75	152.50	158.30	157.70	4.55	4.20	0.013
P-7	205+30	203+80	12 inch	144.00	0.004861	1.33	2.48	3.21	153.20	153.39	152.50	151.80	157.70	158.00	4.20	5.20	0.013
P-8	203+80	5-1	18 inch	31.00	0.004516	2.52	7.06	3.66	153.16	153.17	151.80	151.66	158.00	158.00	4.70	4.84	0.013
P-9	205+60	205+30LT	12 inch	23.00	0.028261	0.12	5.99	3.01	153.49	153.54	153.40	152.75	159.83	158.30	5.43	4.55	0.013
P-10	311+01 8'LT	O-2	12 inch	64.00	0.154688	0.15	7.59	3.78	175.10	185.06	184.90	175.00	188.90	175.00	3.00	-1.00	0.024
P-11	312+41 8'LT	O-3	12 inch	89.00	0.107865	0.15	6.34	3.33	175.10	184.76	184.60	175.00	188.61	175.00	3.01	-1.00	0.024
P-16	401+20	5-4	12 inch	118.00	0.114407	1.05	6.53	6.09	162.50	175.43	175.00	161.50	177.00	164.60	1.00	2.10	0.024

Profile: Profile - 1

Scenario: RTE 72 EXIT RAMP&RTE 9 ENTRANCE RAMP

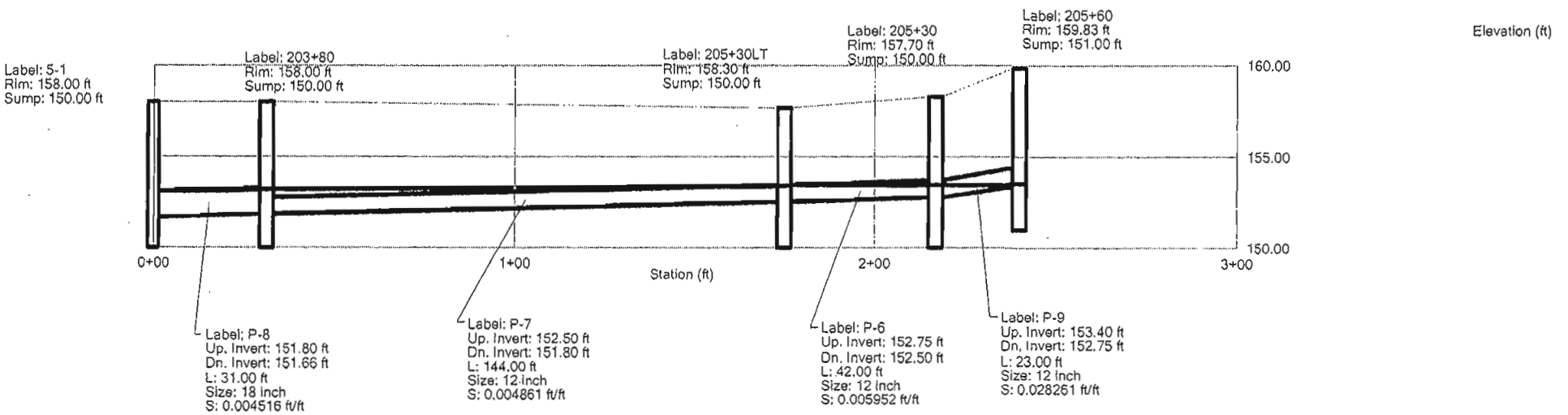

Profile: Profile - 2

Scenario: RTE 72 EXIT RAMP&RTE 9 ENTRANCE RAMP

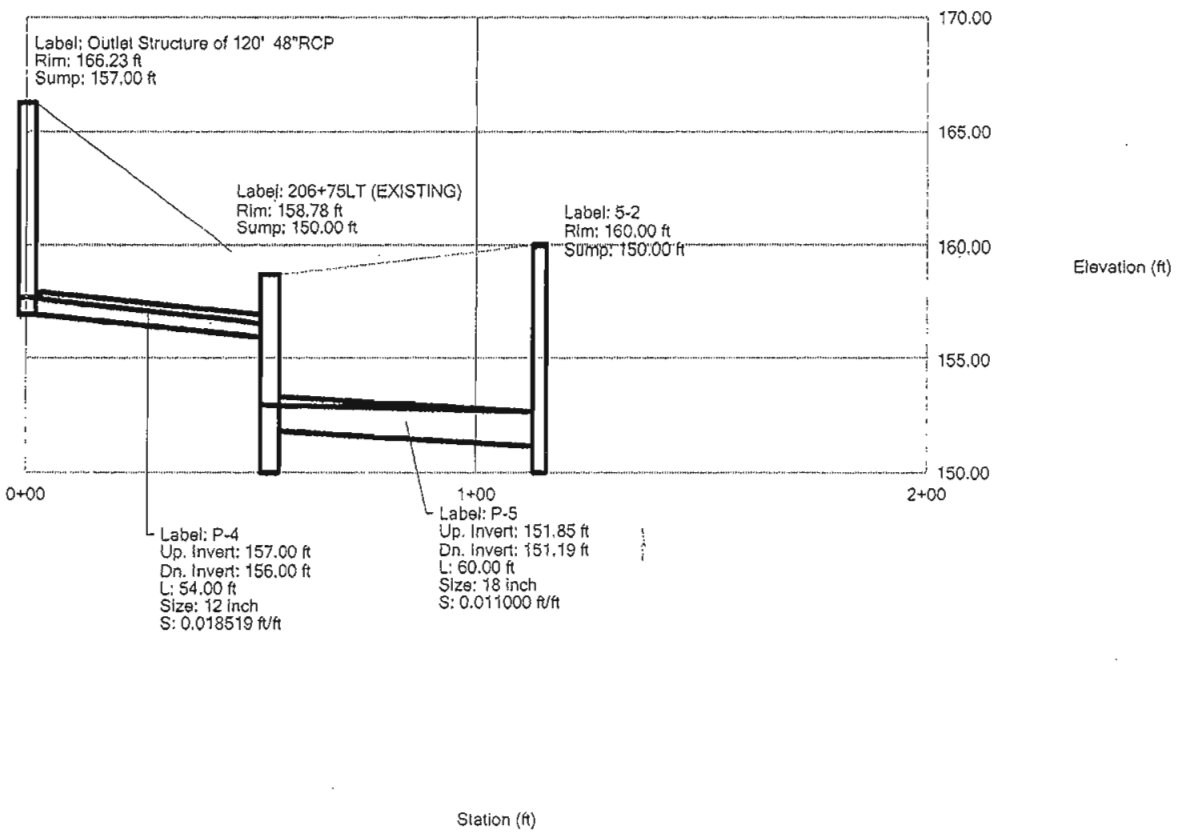

Profile: Profile - 3

Scenario: RTE 72 EXIT RAMP&RTE 9 ENTRANCE RAMP

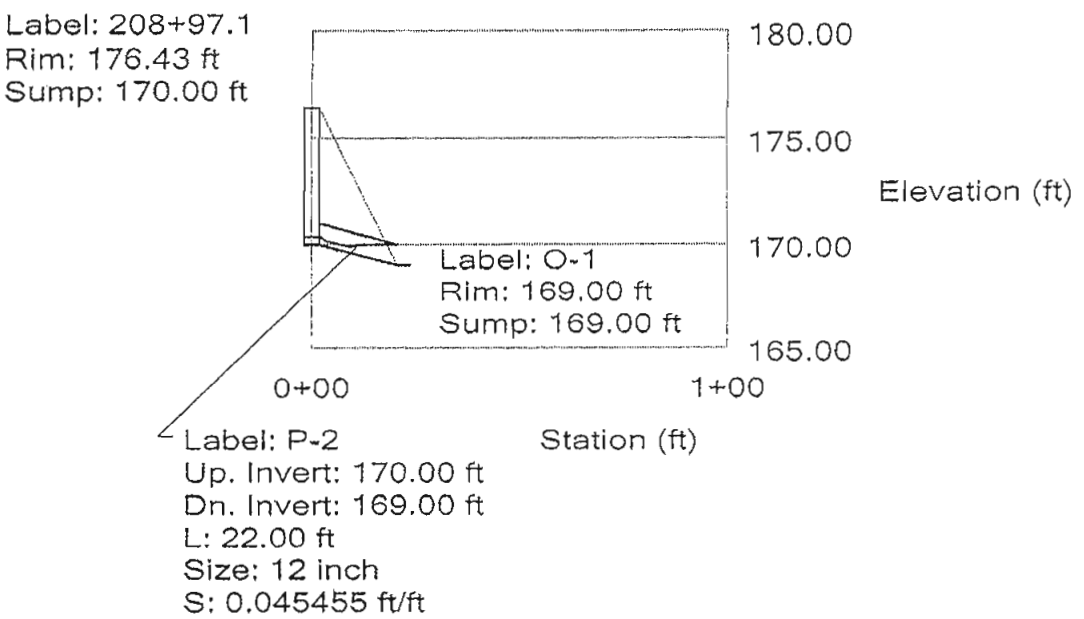

Profile: Profile - 4

Scenario: RTE 72 EXIT RAMP&RTE 9 ENTRANCE RAMP

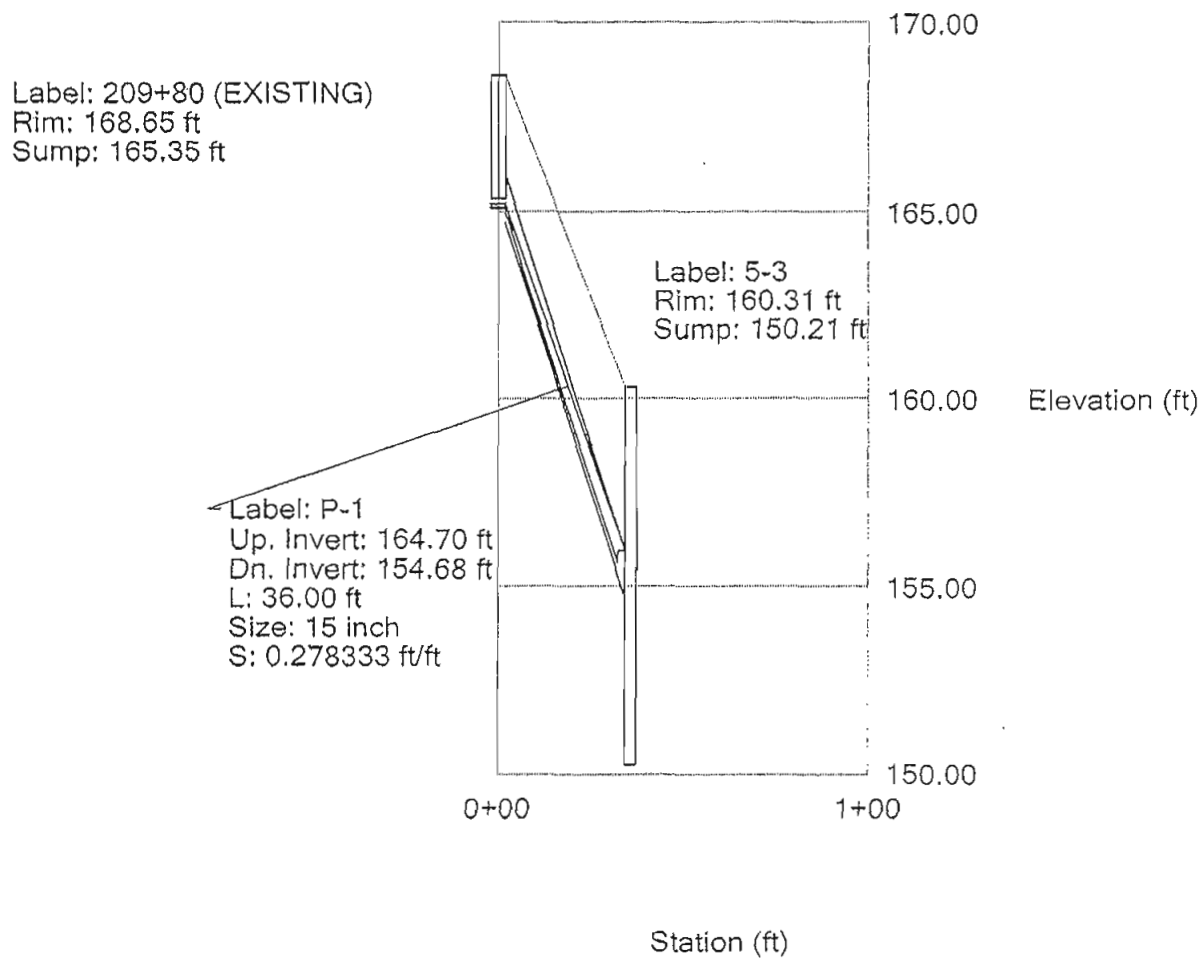

Profile: Profile - 5

Scenario: RTE 72 EXIT RAMP&RTE 9 ENTRANCE RAMP

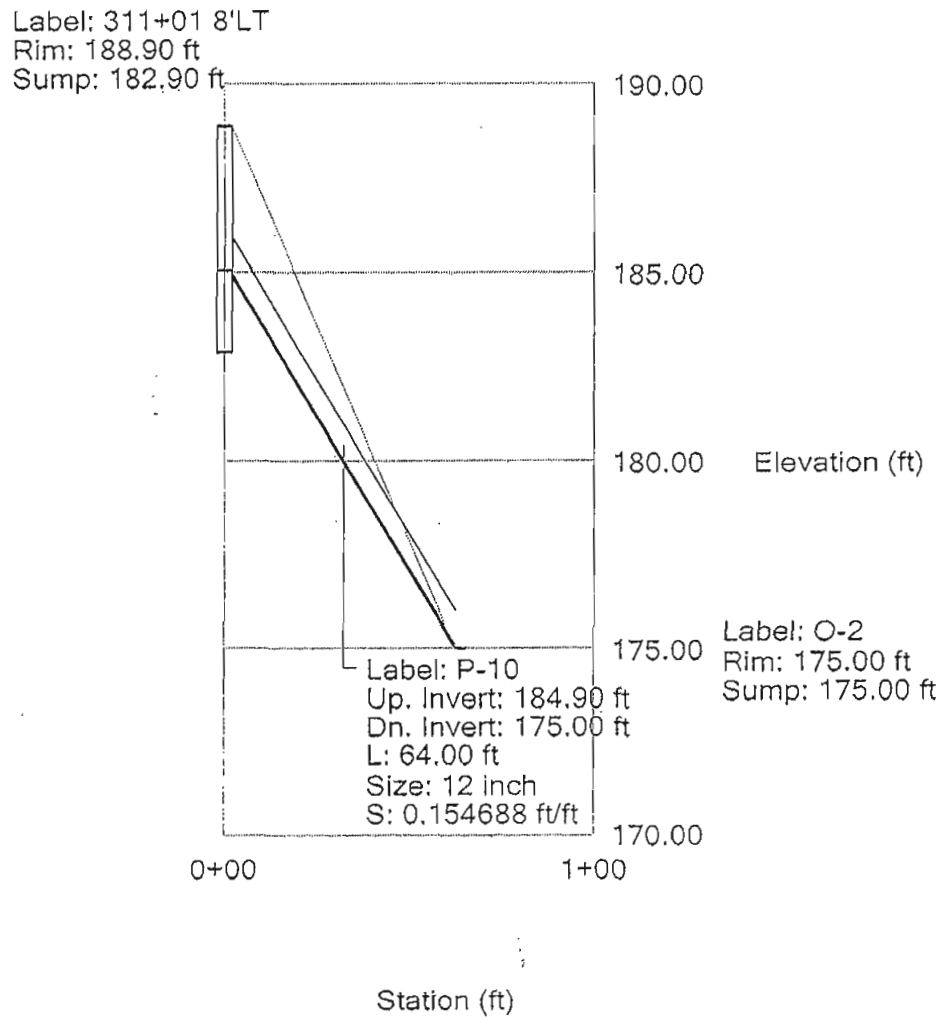

Profile: Profile - 6

Scenario: RTE 72 EXIT RAMP&RTE 9 ENTRANCE RAMP

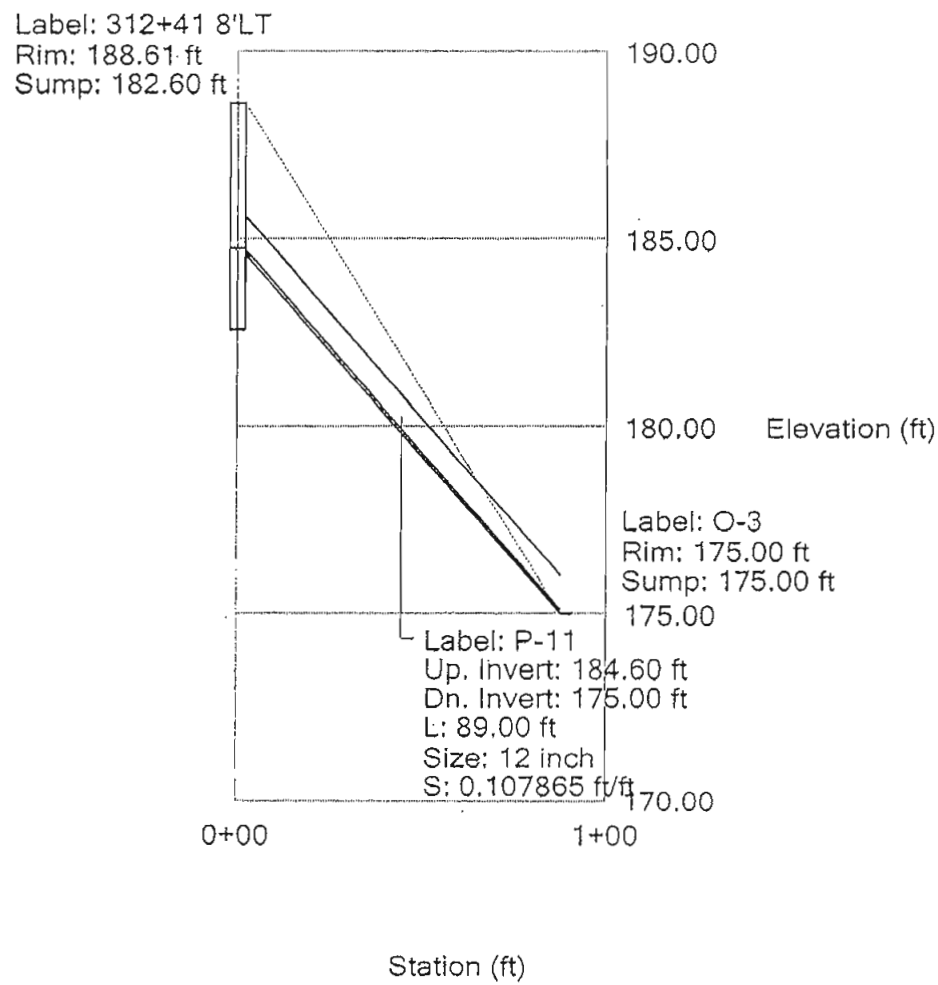

Profile: Profile - 7

Scenario: RTE 72 EXIT RAMP&RTE 9 ENTRANCE RAMP

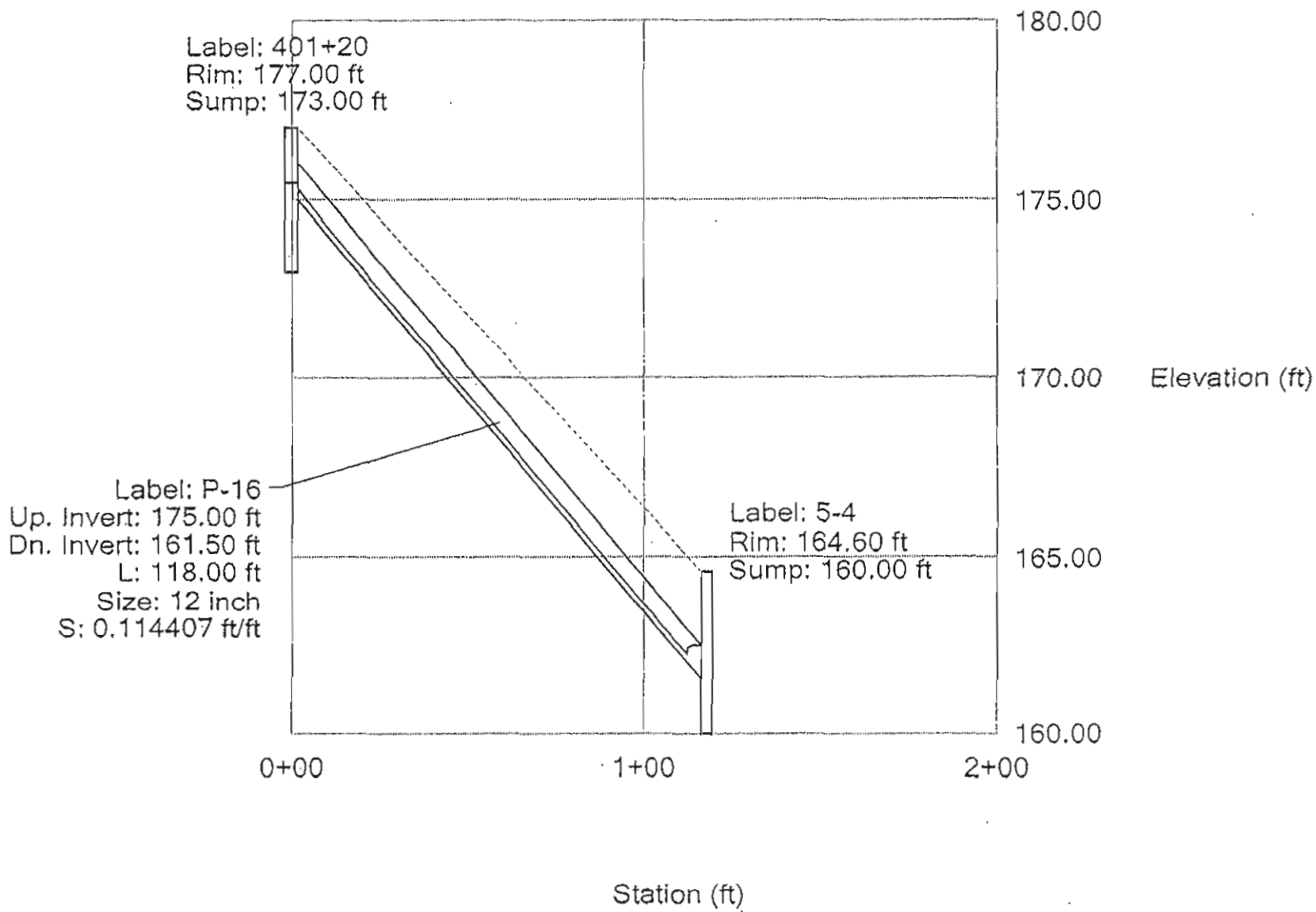

Hydraflow Table of Contents

48RCP-5142010.gpw

Hydraflow Hydrographs by Intelisolve v9.02

Monday, May 24, 2010

Watershed Model Schematic 1

10 - Year

Summary Report 2

Hydrograph Reports 3

Hydrograph No. 1, Manual, EX-2 3

Hydrograph No. 2, Manual, CB2 4

Hydrograph No. 3, Manual, CB-B 5

Hydrograph No. 4, Manual, CB-AA 6

Hydrograph No. 5, Reservoir, 48RCP Pond 7

Pond Report - 48 RCP 8

Hydrograph No. 6, Combine, Proposed Cond. 9

Hydrograph No. 7, Manual, Existing Condtion 10

Hydraulic analysis for the 120 feet 48' RCP.

Modified Rational Method was used to generate the

Input hydrograph.

NEW BRITAIN-HARTFORD BUSWAY
New Britain to Rte.72 Exit Ramp
URS PROJECT NO.36937230
POND SIZING - MODIFIED RATIONAL METHOD

URS
DESIGNED BY: LGAO DATE: 6/8/2009
CHECKED BY: DATE:
SHEET 1 OF 1

Modified Rational Method (Design Storm - 10 Year)

CB-AA Propopsed Q= 3.48 cfs Tc = 10 min
Target Q = 1.99 cfs (Estimation - (Total Q - Combine Q of EX-2, CB2 and CB-B is considered))

Duration	Peak Rate	Inflow Volume	Outflow Volume	Storage Volume	Intensity	AC
Mins	cfs	cu.ft	cu.ft	cu.ft	in/hr	acres
0	0	0	0	0	0	0.7249
10	3.48	2087.71	1705.13	382.58	4.8	0.7249
11	3.41	2248.64	1810.00	438.64	4.7	0.7249
12	3.26	2348.68	1898.41	450.27	4.5	0.7249
13	3.12	2431.31	1983.93	447.39	4.3	0.7249
14	3.04	2557.45	2085.18	472.27	4.2	0.7249
15	2.90	2609.64	2165.56	444.08	4	0.7249
16	2.83	2714.03	2263.94	450.08	3.9	0.7249
17	2.75	2809.71	2361.23	448.49	3.8	0.7249
18	2.75	2974.99	2480.63	494.36	3.8	0.7249
19	2.68	3057.63	2576.71	480.91	3.7	0.7249
20	2.61	3131.57	2671.51	460.06	3.6	0.7249
21	2.54	3196.81	2764.89	431.92	3.5	0.7249
22	2.46	3253.35	2856.75	396.60	3.4	0.7249
23	2.46	3401.23	2976.15	425.08	3.4	0.7249
24	2.39	3444.72	3066.33	378.39	3.3	0.7249
25	2.32	3479.52	3154.69	324.83	3.2	0.7249
26	2.25	3505.62	3241.05	264.56	3.1	0.7249
27	2.17	3523.01	3325.21	197.81	3	0.7249
28	2.17	3653.50	3444.61	208.89	3	0.7249
29	2.10	3657.85	3526.33	131.51	2.9	0.7249

⇦ Design Rainfall Duration

Watershed Model Schematic

Hydraflow Hydrographs by Intelisolve v9.02

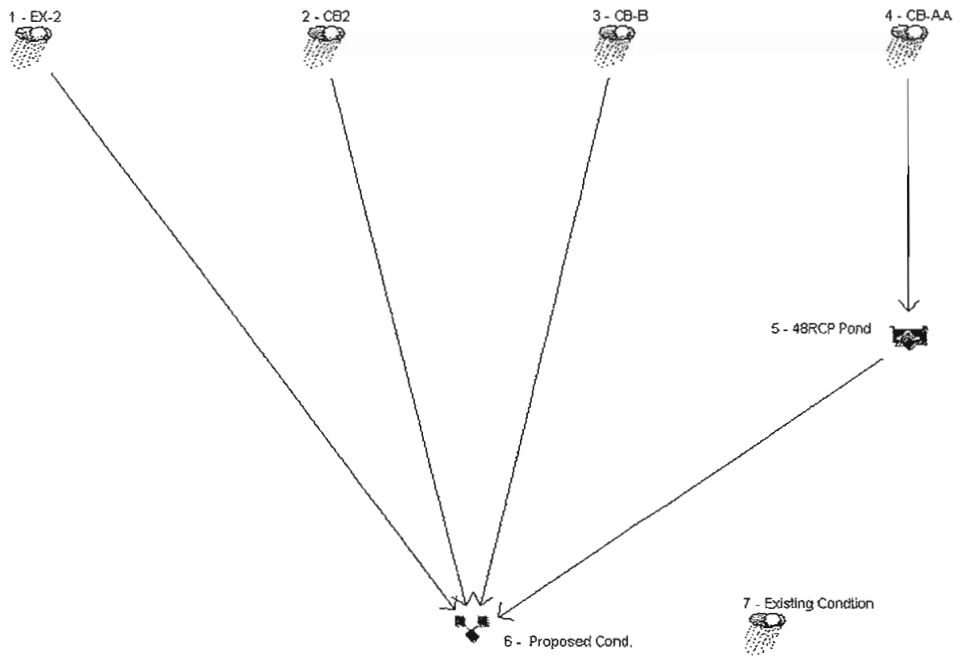

Legend

Hyd.	Origin	Description
1	Manual	EX-2
2	Manual	CB2
3	Manual	CB-B
4	Manual	CB-AA
5	Reservoir	48RCP Pond
6	Combine	Proposed Cond.
7	Manual	Existing Condtion

Hydrograph Summary Report

Hydraflow Hydrographs by Intelisolve v9.02

Hyd.	Hydrograph type (origin)	Peak flow (cfs)	Time interval (min)	Time to peak (min)	Hyd. volume (cuft)	Inflow hyd(s)	Maximum elevation (ft)	Total strge used (cuft)	Hydrograph description
1	Manual	1.160	1	5	348	----	------	------	EX-2
2	Manual	0.870	1	10	523	----	------	------	CB2
3	Manual	0.770	1	10	463	----	------	------	CB-B
4	Manual	2.750	1	10	2,973	----	------	------	CB-AA
5	Reservoir	2.150	1	20	2,953	4	159.33	911	48RCP Pond
6	Combine	3.114	1	10	4,286	1, 2, 3, 5	------	------	Proposed Cond.
7	Manual	3.490	1	10	2,095	----	------	------	Existing Condtion

Hydrograph Report

Hydraflow Hydrographs by Intelisolve v9.02 Monday, May 24, 2010

Hyd. No. 1

EX-2

Hydrograph type	= Manual	Peak discharge	= 1.160 cfs
Storm frequency	= 10 yrs	Time to peak	= 5 min
Time interval	= 1 min	Hyd. volume	= 348 cuft

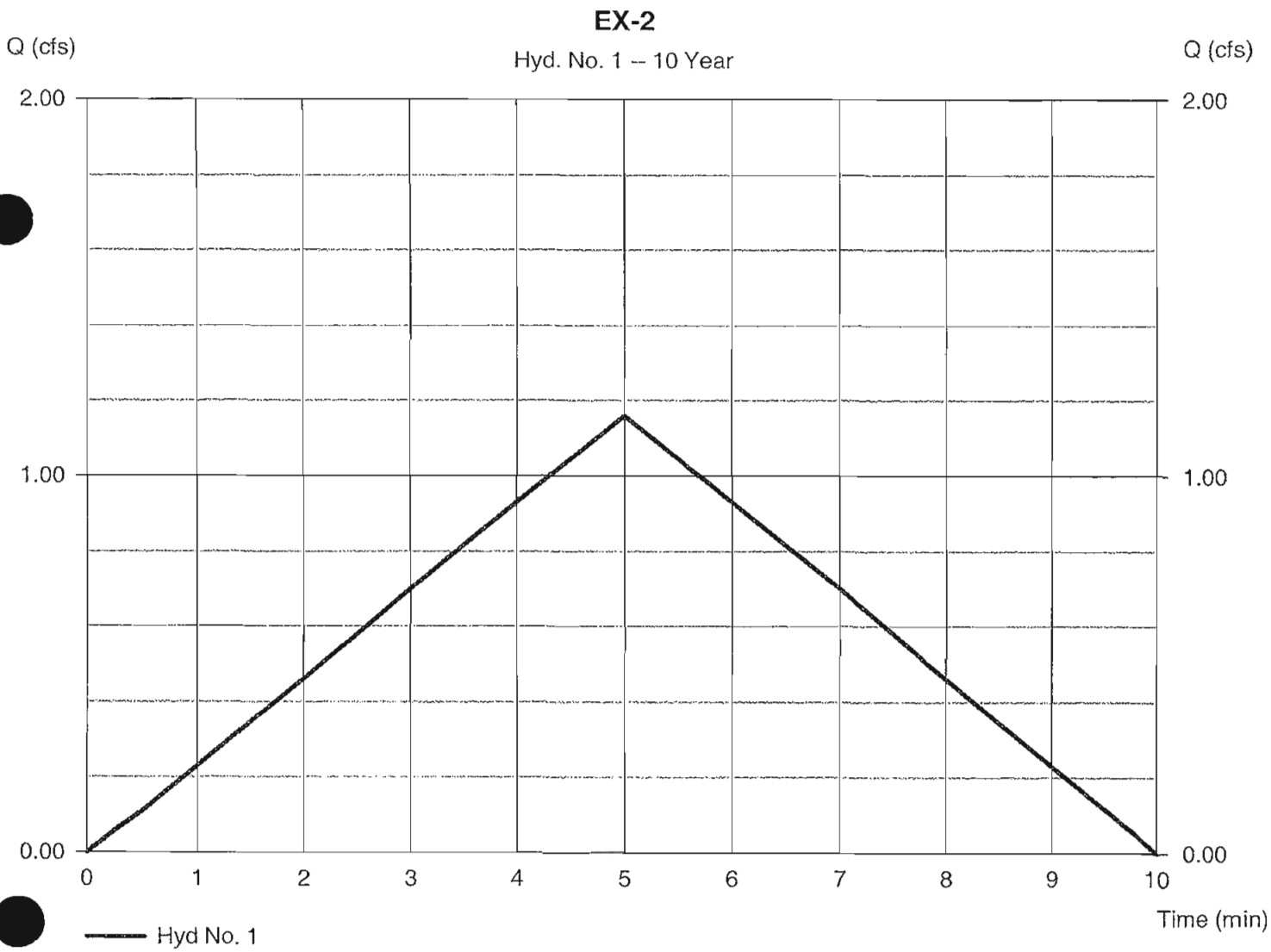

Hydrograph Report

Hydraflow Hydrographs by Intelisolve v9.02 Monday, May 24, 2010

Hyd. No. 2

CB2

Hydrograph type	= Manual	Peak discharge	= 0.870 cfs
Storm frequency	= 10 yrs	Time to peak	= 10 min
Time interval	= 1 min	Hyd. volume	= 523 cuft

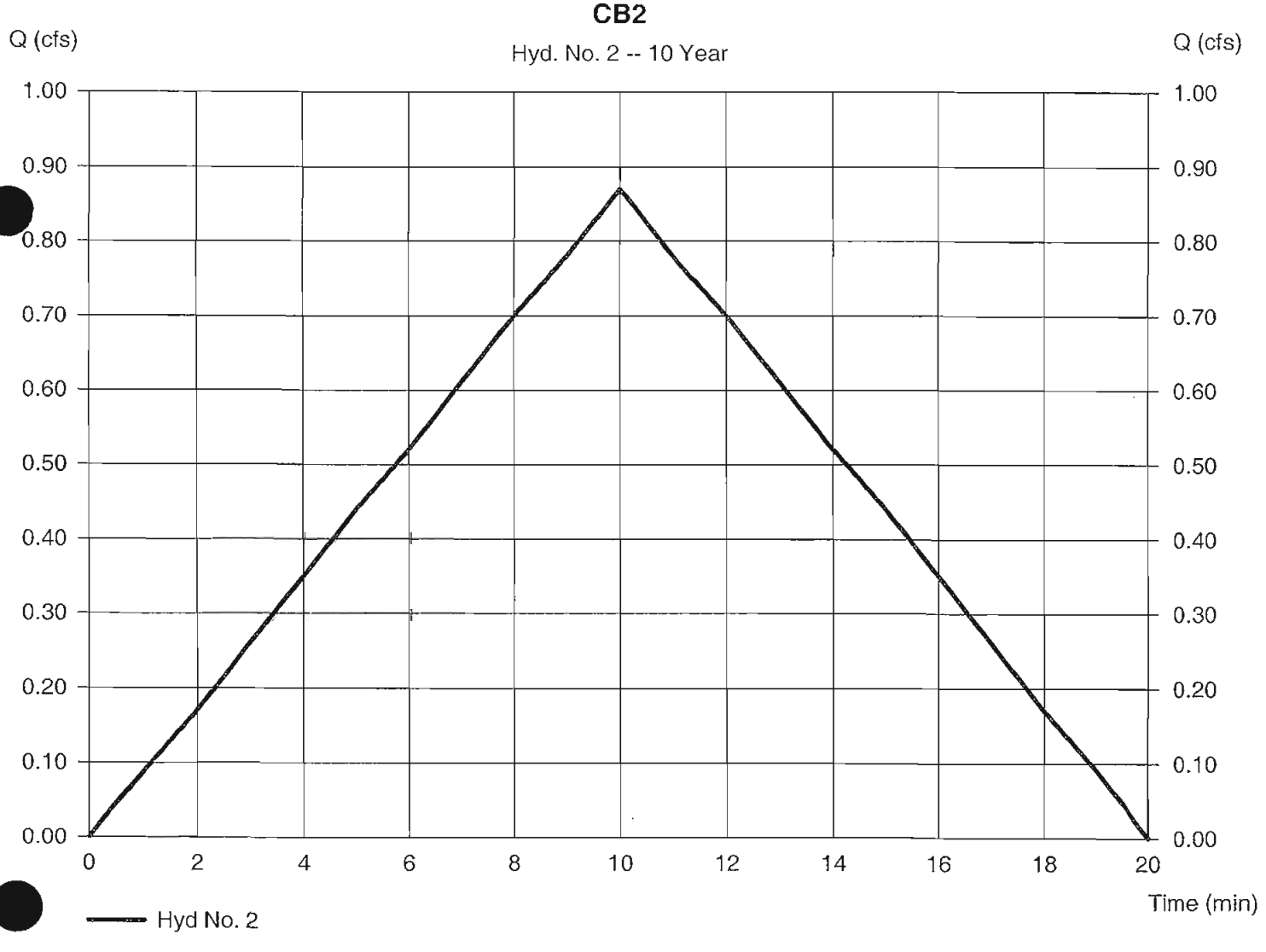

Hydrograph Report

Hydraflow Hydrographs by Intelisolve v9.02 Monday, May 24, 2010

Hyd. No. 3

CB-B

Hydrograph type	= Manual	Peak discharge	= 0.770 cfs
Storm frequency	= 10 yrs	Time to peak	= 10 min
Time interval	= 1 min	Hyd. volume	= 463 cuft

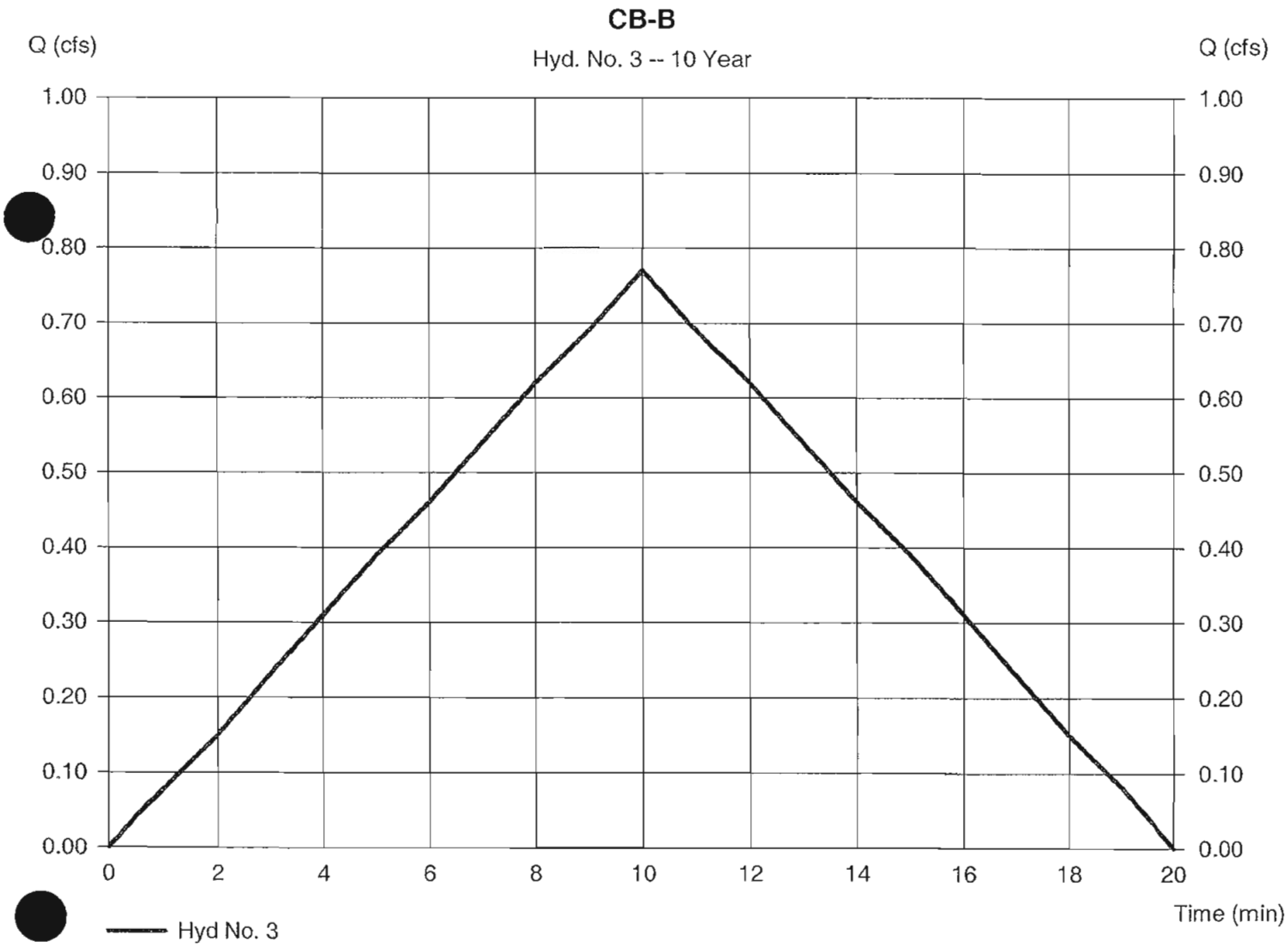

Hydrograph Report

Hydraflow Hydrographs by Intelisolve v9.02 Monday, May 24, 2010

Hyd. No. 4

CB-AA

Hydrograph type	= Manual	Peak discharge	= 2.750 cfs
Storm frequency	= 10 yrs	Time to peak	= 10 min
Time interval	= 1 min	Hyd. volume	= 2,973 cuft

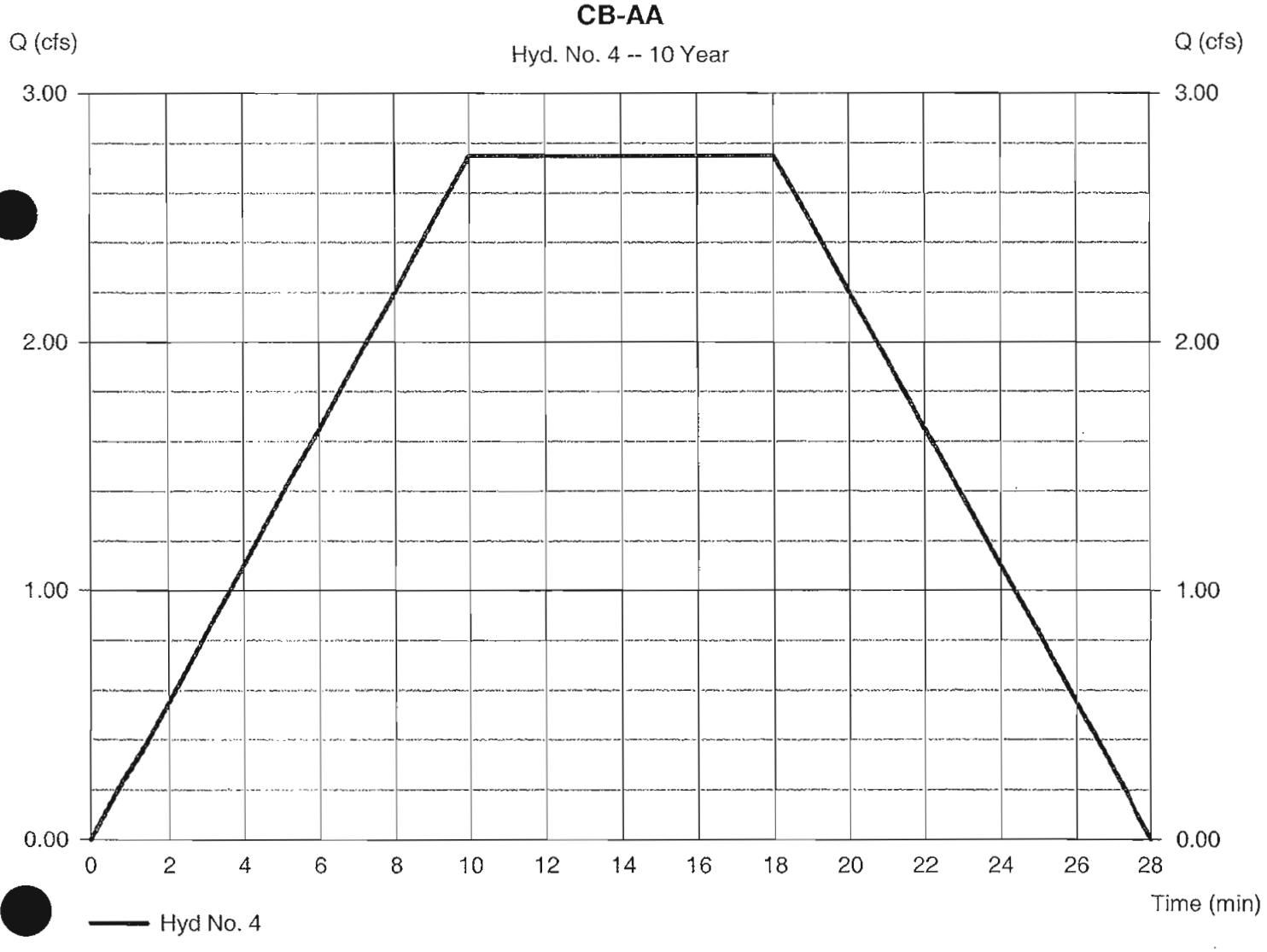

Hydrograph Report

Hydraflow Hydrographs by Intelisolve v9.02 Monday, May 24, 2010

Hyd. No. 5

48RCP Pond

Hydrograph type	= Reservoir	Peak discharge	= 2.150 cfs
Storm frequency	= 10 yrs	Time to peak	= 20 min
Time interval	= 1 min	Hyd. volume	= 2,953 cuft
Inflow hyd. No.	= 4 - CB-AA	Max. Elevation	= 159.33 ft
Reservoir name	= 48 RCP	Max. Storage	= 911 cuft

Storage Indication method used.

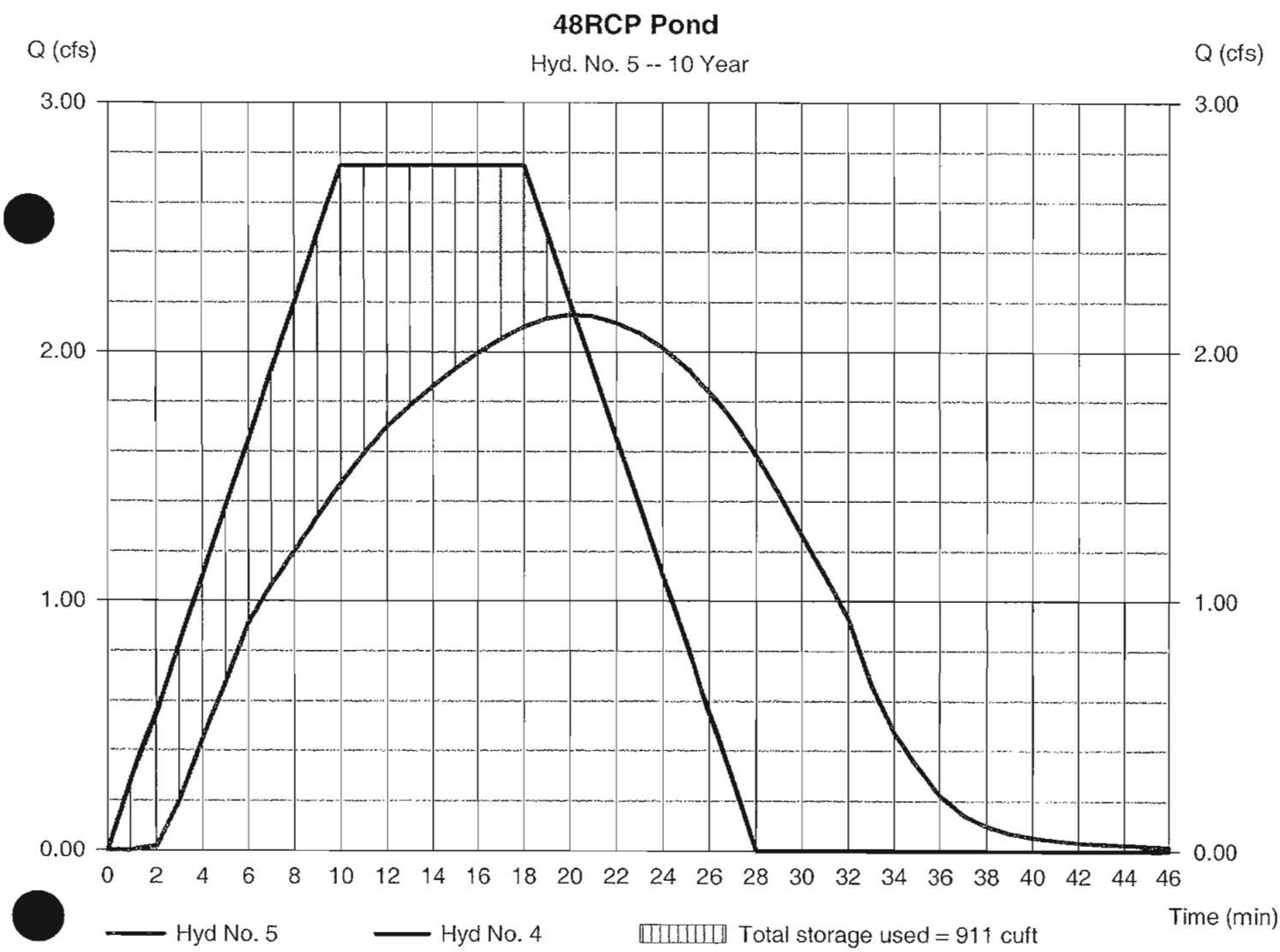

Pond Report

Hydraflow Hydrographs by Intelisolve v9.02 — Monday, May 24, 2010

Pond No. 1 - 48 RCP

Pond Data

UG Chambers - Invert elev. = 157.00 ft, Rise x Span = 4.00 x 4.00 ft, Barrel Len = 120.00 ft, No. Barrels = 1, Slope = 0.00%, Headers = No

Stage / Storage Table

Stage (ft)	Elevation (ft)	Contour area (sqft)	Incr. Storage (cuft)	Total storage (cuft)
0.00	157.00	n/a	0	0
0.40	157.40	n/a	78	78
0.80	157.80	n/a	136	215
1.20	158.20	n/a	166	380
1.60	158.60	n/a	183	563
2.00	159.00	n/a	191	754
2.40	159.40	n/a	191	945
2.80	159.80	n/a	183	1,128
3.20	160.20	n/a	166	1,294
3.60	160.60	n/a	136	1,430
4.00	161.00	n/a	78	1,508

Culvert / Orifice Structures

	[A]	[B]	[C]	[PrfRsr]
Rise (in)	= 18.00	8.00	Inactive	0.00
Span (in)	= 18.00	8.00	0.00	0.00
No. Barrels	= 1	1	1	0
Invert El. (ft)	= 157.00	157.10	0.00	0.00
Length (ft)	= 57.00	0.00	0.00	0.00
Slope (%)	= 0.50	0.50	0.00	n/a
N-Value	= .013	.013	.013	n/a
Orifice Coeff.	= 0.60	0.60	0.60	0.60
Multi-Stage	= n/a	Yes	No	No

Weir Structures

	[A]	[B]	[C]	[D]
Crest Len (ft)	Inactive	0.00	0.00	0.00
Crest El. (ft)	= 0.00	0.00	0.00	0.00
Weir Coeff.	= 3.33	3.33	3.33	3.33
Weir Type	= ---	---	---	---
Multi-Stage	= No	No	No	No

Exfil.(in/hr) = 0.000 (by Wet area)
TW Elev. (ft) = 0.00

Note: Culvert/Orifice outflows are analyzed under inlet and outlet control. Weir risers are checked for orifice conditions.

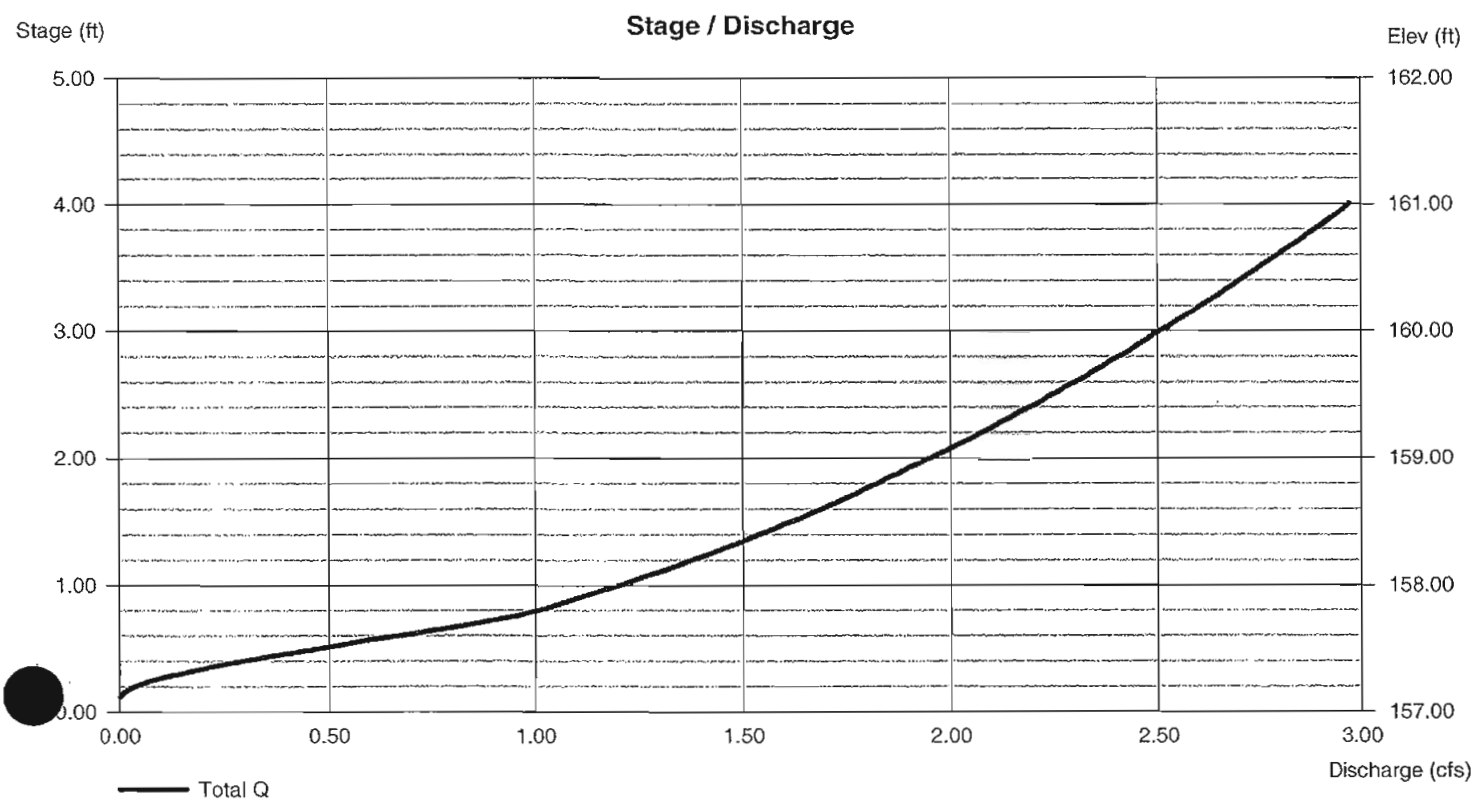

Hydrograph Report

Hydraflow Hydrographs by Intelisolve v9.02 Monday, May 24, 2010

Hyd. No. 6

Proposed Cond.

Hydrograph type	= Combine	Peak discharge	= 3.114 cfs
Storm frequency	= 10 yrs	Time to peak	= 10 min
Time interval	= 1 min	Hyd. volume	= 4,286 cuft
Inflow hyds.	= 1, 2, 3, 5	Contrib. drain. area	= 0.000 ac

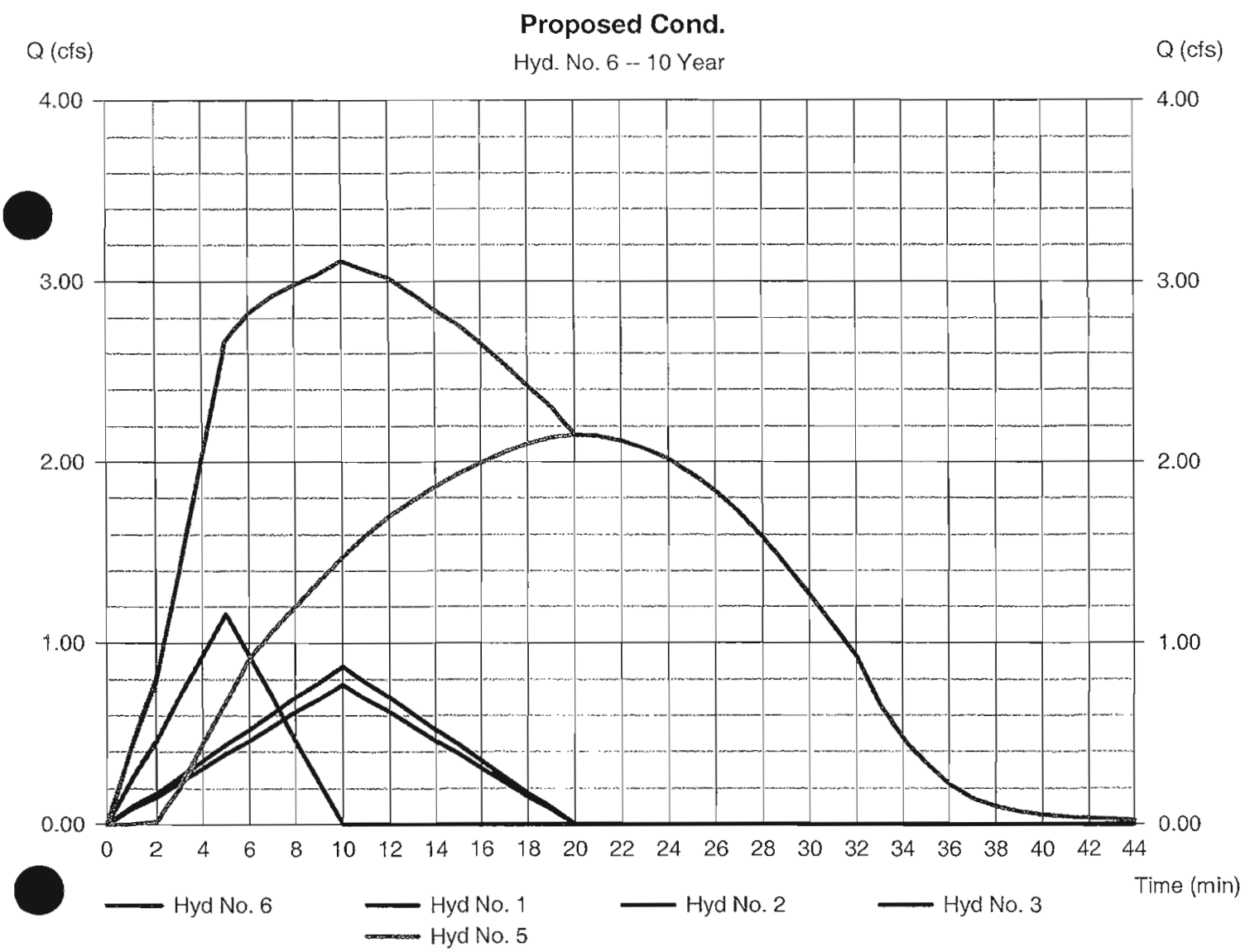

Hydrograph Report

Hydraflow Hydrographs by Intelisolve v9.02 Monday, May 24, 2010

Hyd. No. 7

Existing Condtion

Hydrograph type	= Manual	Peak discharge	= 3.490 cfs
Storm frequency	= 10 yrs	Time to peak	= 10 min
Time interval	= 1 min	Hyd. volume	= 2,095 cuft

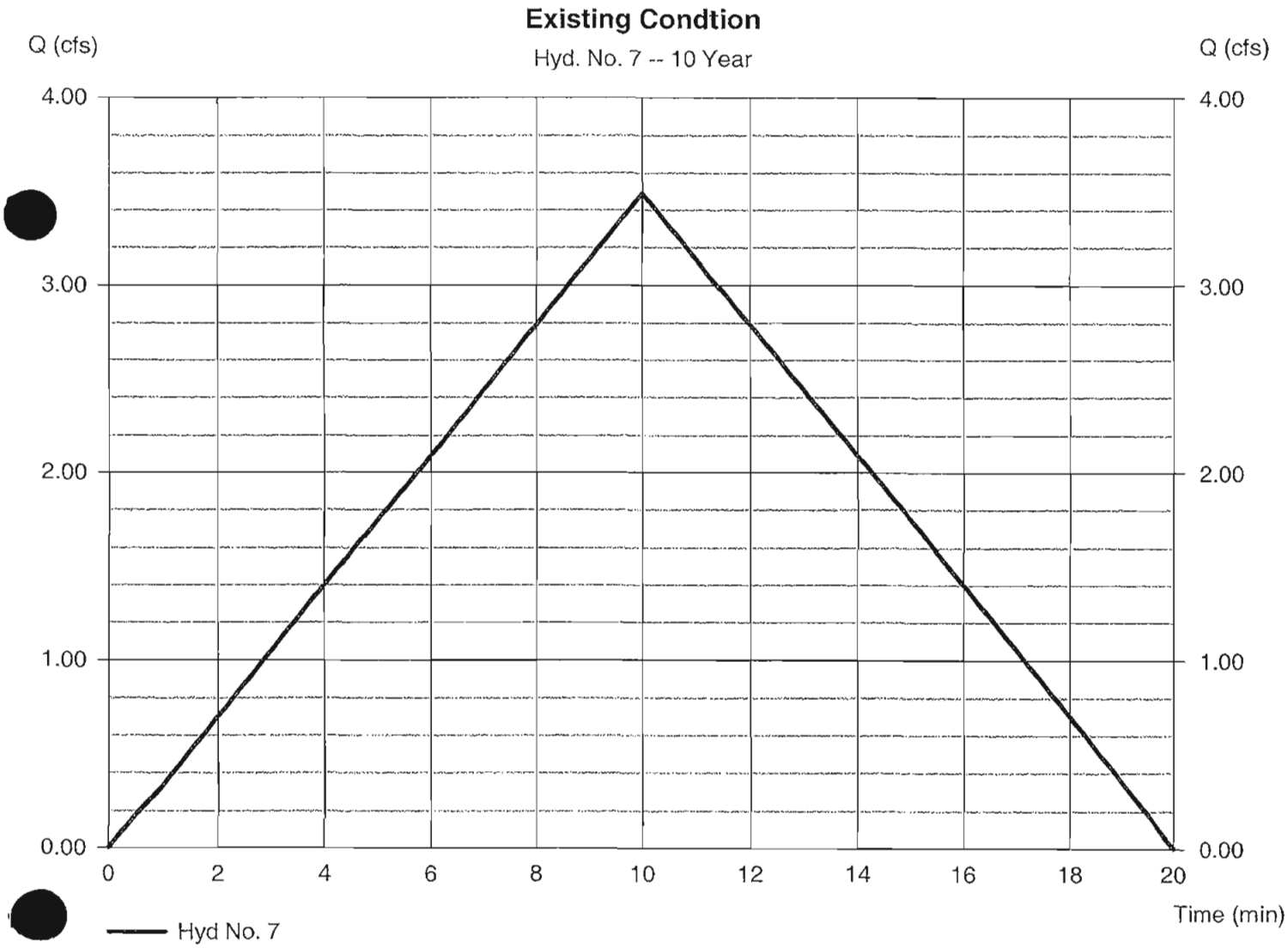

DRANAGE AREA MAP -DRAINAGE SYSTEM FIVE
RT.72 EXIT RAMP & RT.9 SB ENTRANCE(EXISTING)
SCALE:1"=60'

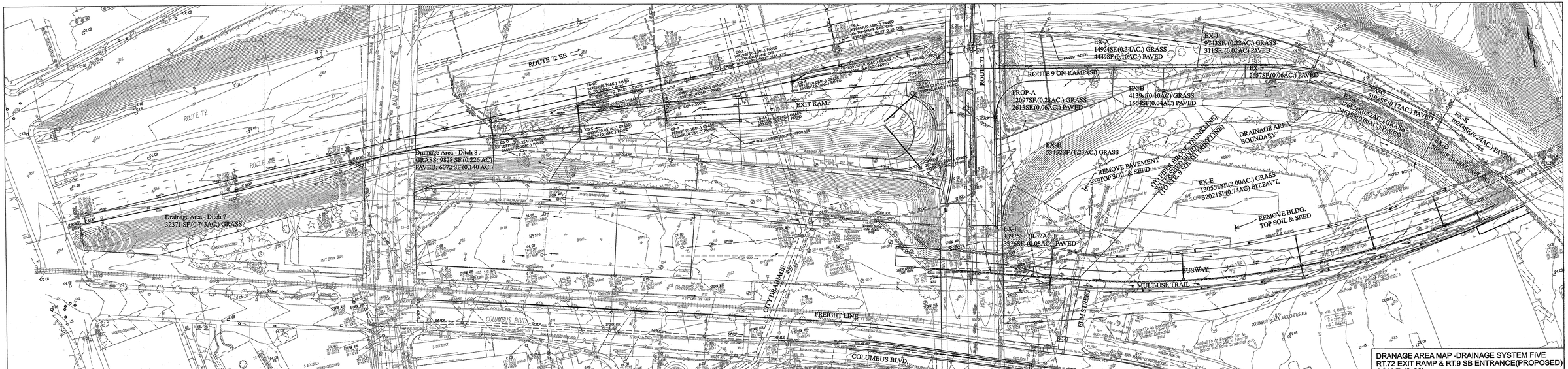

DRANAGE AREA MAP -DRAINAGE SYSTEM FIVE
RT.72 EXIT RAMP & RT.9 SB ENTRANCE(PROPOSED)
SCALE:1"=60'

Appendix E

Drainage System Six – Cemetery Area

- Drainage Area Analysis
- Initial Tailwater Estimation
- Hydraulic Grade Line Analysis
- Drainage Area Maps

URS

DRAINAGE ANALYSES
FOR
Cemetery Service Road

Job	NH-BUSWAY	Project No.	36937231	Sheet	
		Computed By	LG	Date	08/25/08
Description	Existing Drainage Area	Checked By		Date	

Description of Area

Sub-Area	Description	Area (sf)	Area (acres)	Runoff Coefficient	AC	Weighted C
Part 1	Grass	542,229	12.42	0.30	3.73	
Part 2	Grass	52,383	1.20	0.30	0.36	
Total Drainage Area		594,612	13.62		4.09	0.30

Time of Concentration

Sheet Flow

$$T_t = \frac{0.007(nL)^{0.8}}{P_2^{0.5} S^{0.4}} \qquad (L \leq 300')$$

n	L	P_2	S	T_t (hours)	T_t (minutes)
0.24	127	3.3	0.070	0.17	10
Total	300			0.17	10

Shallow Concentrated Flow

$V=16.1345(s)^{0.5}$ (unpaved) $V=20.3284(s)^{0.5}$ (paved)

$T_t=L/(3600V)$

S	V	L	T_t (hours)	T_t (minutes)
0.050	3.61	140.00	0.01	0.65
0.030	2.79	264.00	0.03	1.57
0.005	1.14	560.00	0.14	8.18
	Total	404.00	0.04	10.40

Tc = 21 min

Peak Flow

Q=CIA (2-10 year storms)

Q=CC_fIA (>10 year storms)

Year Storm	C_f
25	1.10
50	1.20
100	1.25

T_C= 5

	2yr	10yr	25yr	50yr	100yr
I(in/hr)	2.50	3.50	4.10	4.50	5.00

Q_{2yr}= 10.22 cfs
Q_{10yr}= 14.30 cfs
Q_{25yr}= 18.43 cfs
Q_{50yr}= 22.07 cfs
Q_{100yr}= 25.54 cfs

URS

				Page	of
Job:	**NH-BUSWAY**	Project No.	**36937231**	Sheet	of
Description:	**Initial Tailwater Estimation**	Computed by	**LGAO**	Date	9/24/2009
System Six		Checked by	DS	Date	9/24/2009

System Six:

Outlet Pipe at Cemetery ID = 18 inch
Design Discharge =9.92 cfs
Pipe Slope = .6%
dc (Critical depth) = 1.21'
(dc + ID) / 2 = 1.36 ft
(dc+ID)/2 is chosen as the design water depth at the outlet,
which is : 108.36 feet

Scenario: CEMETERY AREA- 2Yr Storm

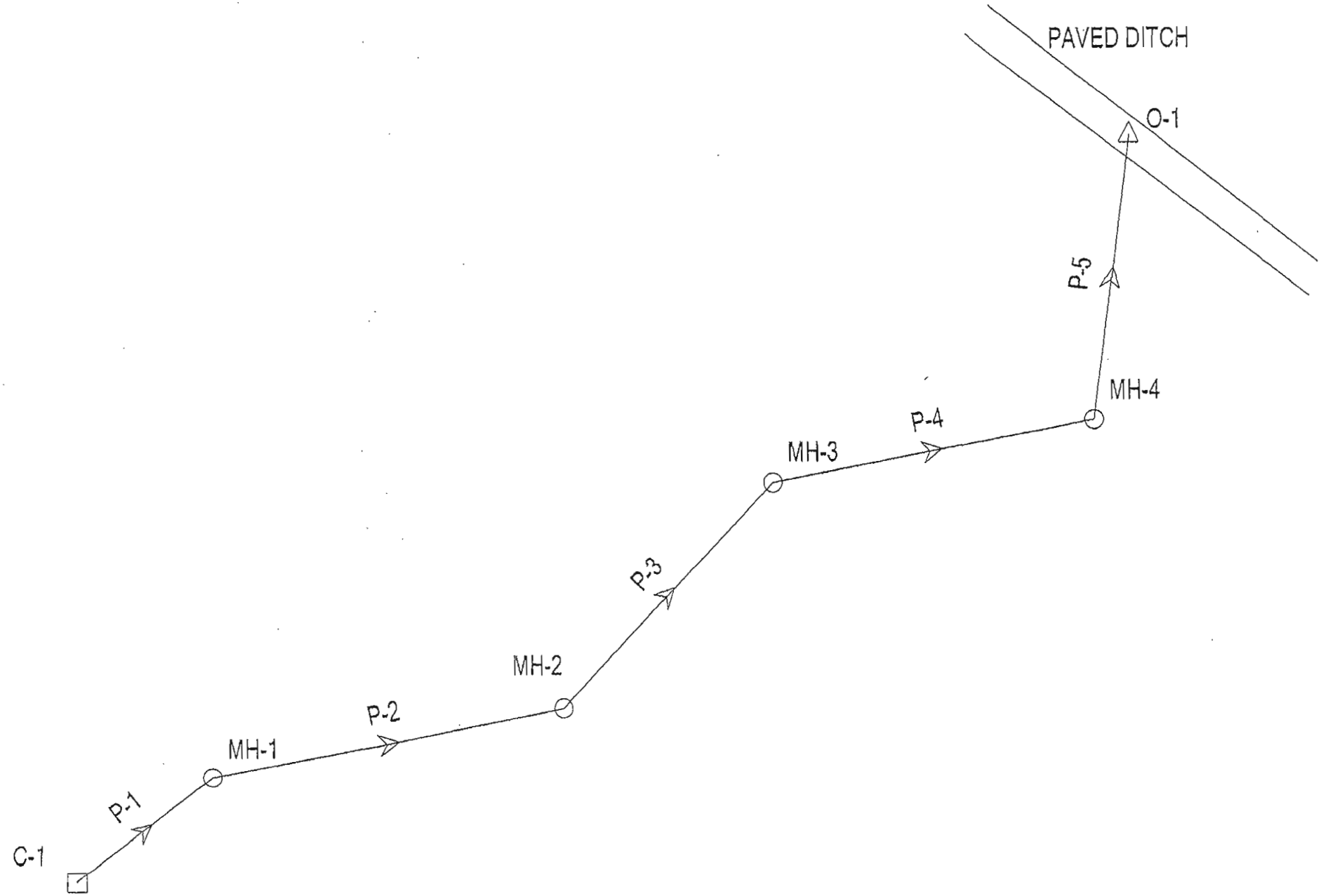

Title: NH-BUSWAY
p:\...\stormcad\cemetryroad-081209.stm
08/19/09 02:36:56 PM

URS CorporationRocky Hill
© Bentley Systems, Inc. Haestad Methods Solution Center Watertown, CT 06795 USA +1-203-755-1666

Project Engineer: L,Gao
StormCAD v5.6 [05.06.014.00]
Page 1 of 1

Scenario: CEMETERY AREA- 2Yr Storm

DOT Report

Upstream Node	Downstream Node	Pipe Flow Time (min)	System Flow Time (min)	Upstream Inlet CA (acres)	System CA (acres)	System Intensity (in/hr)	Section Size	Material	Mannings n	Length (ft)	Upstream Invert Elevation (ft)	Downstream Invert Elevation (ft)	Constructed Slope (ft/ft)	Full Capacity (cfs)	Total System Flow (cfs)	Average Velocity (ft/s)
C-1	MH-1	0.09	21.00	4.0860	4.0860	2.50	18 inch	Concrete	0.013	30.00	109.48	109.18	0.010000	10.50	10.30	5.83
MH-1	MH-2	0.20	21.09	N/A	4.0860	2.49	18 inch	Corrugated H	0.010	69.60	109.18	108.75	0.006178	10.73	10.26	5.81
MH-2	MH-3	0.33	21.29	N/A	4.0860	2.47	18 inch	Corrugated H	0.010	114.50	108.75	108.05	0.006114	10.68	10.18	5.76
MH-3	MH-4	0.31	21.62	N/A	4.0860	2.44	18 inch	Corrugated H	0.010	105.00	108.05	107.45	0.005714	10.32	10.04	5.68
MH-4	O-1	0.16	21.92	N/A	4.0860	2.41	18 inch	Corrugated H	0.010	69.50	107.45	107.00	0.006475	10.99	9.92	7.04

Scenario: CEMETERY AREA- 2Yr Storm

Pipe Report

Label	Upstream Node	Downstream Node	Section Size	Length (ft)	Cons Slope (ft/ft)	Total System Flow (cfs)	Full Capacity (cfs)	Average Velocity (ft/s)	Hydraulic Grade Line Out (ft)	Hydraulic Grade Line In (ft)	Upstream Invert Elevation (ft)	Downstream Invert Elevation (ft)	Upstream Ground Elevation (ft)	Downstream Ground Elevation (ft)	Upstream Cover (ft)	Downstream Cover (ft)	Mannings n
P-1	C-1	MH-1	18 inch	30.00	0.010000	10.30	10.50	5.83	111.59	111.87	109.48	109.18	112.48	116.80	1.50	6.12	0.013
P-2	MH-1	MH-2	18 inch	69.60	0.006178	10.26	10.73	5.81	110.91	111.30	109.18	108.75	116.80	117.26	6.12	7.01	0.010
P-3	MH-2	MH-3	18 inch	114.50	0.006114	10.18	10.68	5.76	109.96	110.60	108.75	108.05	117.26	115.00	7.01	5.45	0.010
P-4	MH-3	MH-4	18 inch	105.00	0.005714	10.04	10.32	5.68	109.11	109.68	108.05	107.45	115.00	114.45	5.45	5.50	0.010
P-5	MH-4	O-1	18 inch	69.50	0.006475	9.92	10.99	7.04	108.36	108.66	107.45	107.00	114.45	107.00	5.50	-1.50	0.010

Scenario: CEME Y AREA- 2Yr Storm

Gutter Flow Analysis (10 yr storm event)

Label	Inlet	Area (acres)	Inlet C	Local Tc (min)	Total Inlet CA (acres)	Total Flow To Inlet (cfs)	Longitudina Slope (ft/ft)	Gutter Cross Slope (ft/ft)	Gutter Ditch Spread (ft)	Intercepted CA (acres)	Gutter Ditch Depth (ft)	Total Bypassed Flow (cfs)	Bypassed CA (acres)	Clogging Factor (%)
C-1	Grate Type C-L Single Grate - Grate Type A	13.6200	0.30	21.00	4.0860	10.30		0.020	49.73	4.0860	0.99	0.00	0.0000	50.0

Profile: Cemetery Road

Scenario: CEMETERY AREA- 2Yr Storm

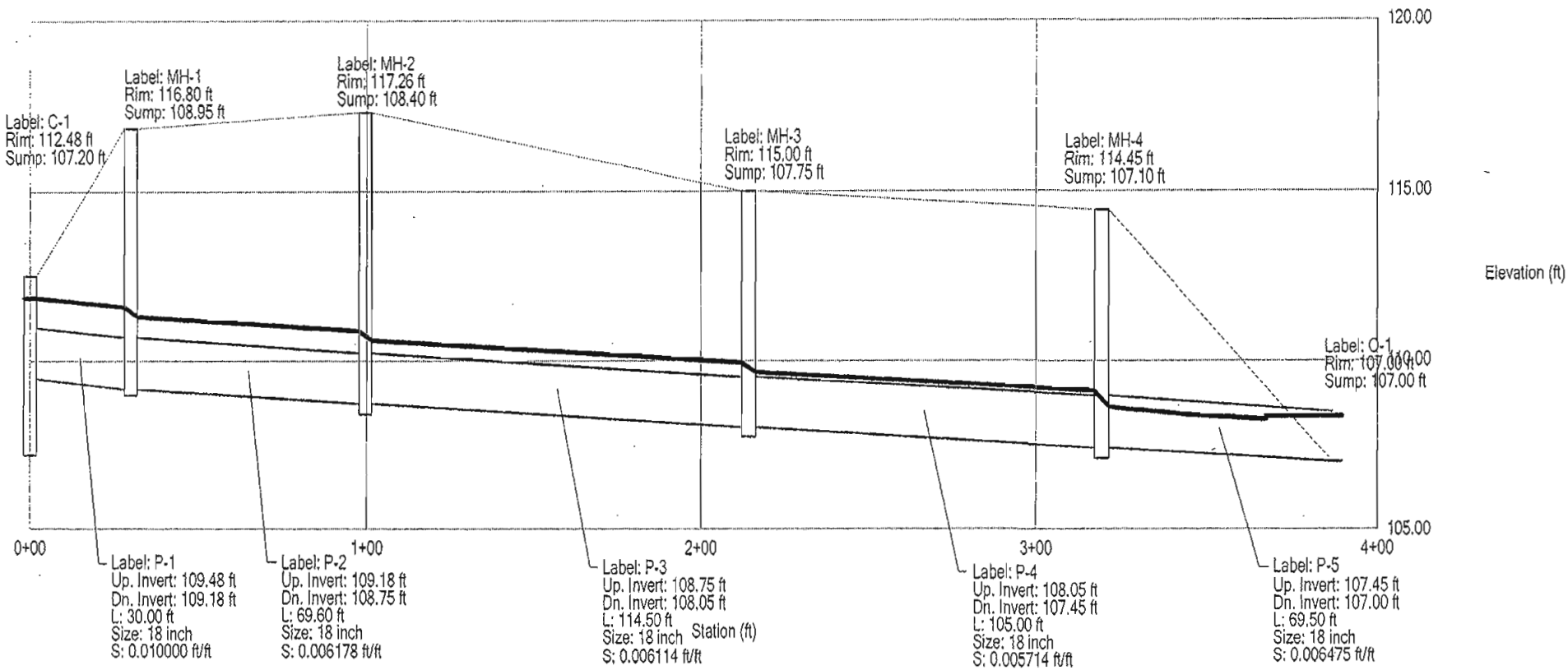

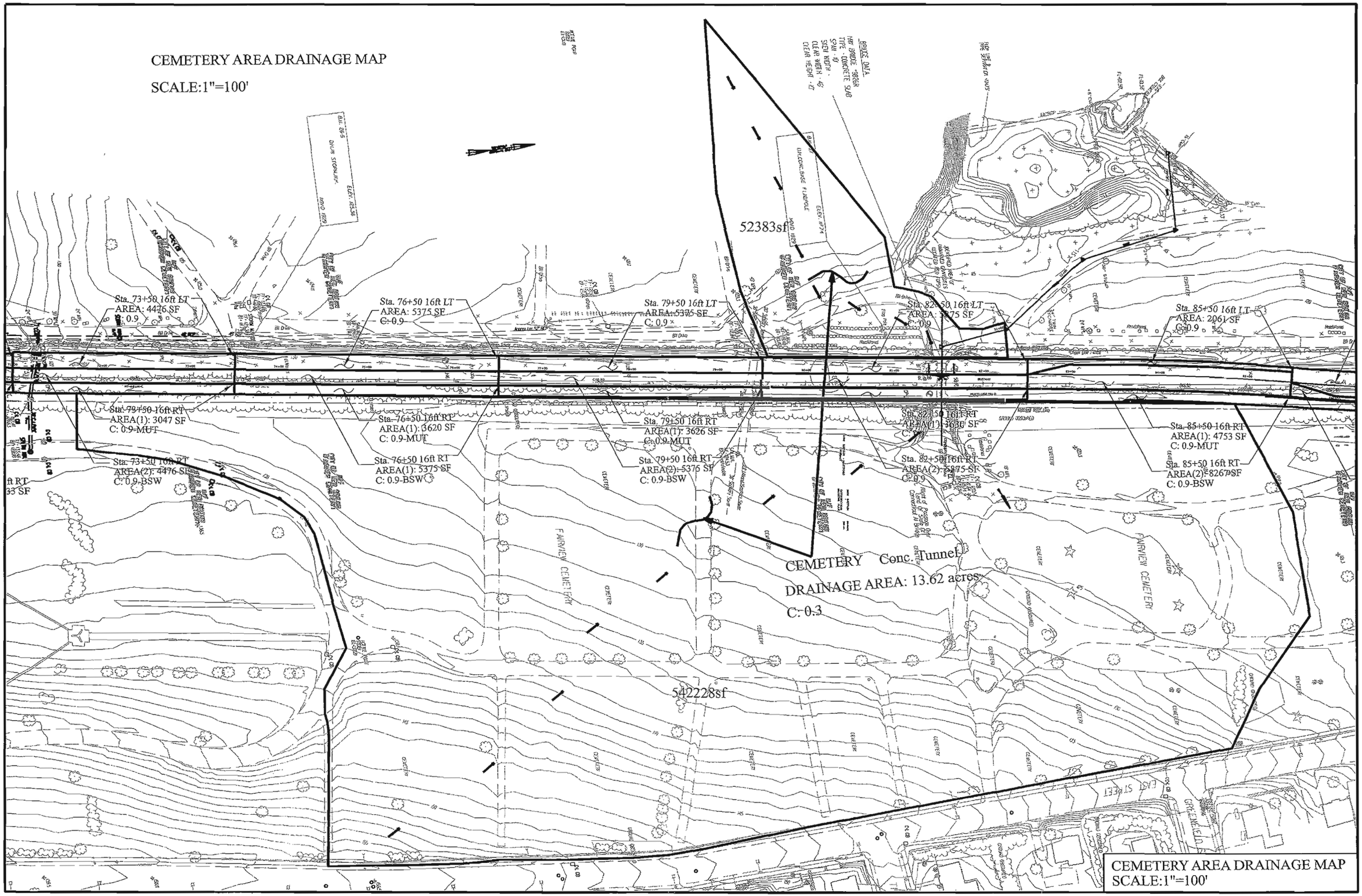
CEMETERY AREA DRAINAGE MAP
SCALE:1"=100'
52383sf
Sta. 73+50 16ft LT
AREA: 4476 SF
C: 0.9
Sta. 76+50 16ft LT
AREA: 5375 SF
C: 0.9
Sta. 79+50 16ft LT
AREA: 5375 SF
C: 0.9
Sta. 82+50 16ft LT
AREA: 5375 SF
C: 0.9
Sta. 85+50 16ft LT
AREA: 2061 SF
C: 0.9
Sta. 73+50 16ft RT
AREA(1): 3047 SF
C: 0.9-MUT
Sta. 76+50 16ft RT
AREA(1): 3620 SF
C: 0.9-MUT
Sta. 79+50 16ft RT
AREA(1): 3626 SF
C: 0.9-MUT
Sta. 82+50 16ft RT
AREA(1): 3630 SF
C: 0.9
Sta. 85+50 16ft RT
AREA(1): 4753 SF
C: 0.9-MUT
Sta. 73+50 16ft RT
AREA(2): 4476 SF
C: 0.9-BSW
Sta. 76+50 16ft RT
AREA(1): 5375 SF
C: 0.9-BSW
Sta. 79+50 16ft RT
AREA(2): 5375 SF
C: 0.9-BSW
Sta. 82+50 16ft RT
AREA(2): 5375 SF
C: 0.9
Sta. 85+50 16ft RT
AREA(2): 8267 SF
C: 0.9-BSW
CEMETERY Conc. Tunnel
DRAINAGE AREA: 13.62 acres
C: 0.3
542228sf
FAIRVIEW CEMETERY
FAIRVIEW CEMETERY
EAST STREET
CEMETERY AREA DRAINAGE MAP
SCALE:1"=100'

Appendix F

Drainage System Seven – East Main Street

- Drainage Area Analysis
- Initial Tailwater Estimation
- Hydraulic Grade Line Analysis
- Drainage Area Maps
- Proposed Southbound Station Area Conditions (Project:88-H039)

NEW BRITAIN-HARTFORD BUSWAY
New Britain to Hartford
URS PROJECT NO.36937230

URS

DESIGNED BY: DS DATE:
CHECKED BY: DATE:
SHEET 1 OF 1

Catch Basin Label	Inlet Type	Bypass Target	Drainage Area (ACRE)	Tc (MIN)	I10 IN/HR	Impervious Coeff.	Impervious Area (ac)	Pervious Coeff.	Pervious Area (ac)	Weighted Runoff Coefficient	Q (CFS)
BUSWAY AT EAST MAIN STREET INTERSECTION											
506+67 13ft RT	C-L	N/A	1.1563	10	4.8	0.9	0.4431	0.3		0.90	4.995
506+79 22.5ft LT	C	N/A	0.4431	5	6.0	0.9	1.1563	0.3		0.90	2.393
508+63 15ft RT	C	N/A	0.1825	5	6.0	0.9	0.1825	0.3		0.90	0.986
508+63 15ft LT	C	N/A	0.1037	5	6.0	0.9	0.1037	0.3		0.90	0.560
		PROPOSED TOTAL	1.8856								
		EXISTING TOTAL	2.1943								

System Seven

Outlet at Sta. 506+79

Outlet Pipe ID = 12 inch
Design Discharge = 5.02 cfs
Pipe Slope = 3%
dc (Critical depth) = 0.92 '
(dc + ID) / 2 = 0.96 ft
To be conservative, the outlet crown elevation is chosen as the design tailwater elevation, which is : 140 feet

Outlet at Sta. 506+67

Outlet Pipe ID = 12 inch
Design Discharge = 2.40 cfs
Pipe Slope = 0.8%
dc (Critical depth) = 0.66 '
(dc + ID) / 2 = 0.83 ft
To be conservative, the outlet crown elevation is chosen as the design tailwater elevation, which is : 141 feet

Outlet at Sta. 508+63

Outlet Pipe ID = 12 inch
Design Discharge = 1.55 cfs
Pipe Slope = 2%
dc (Critical depth) = 0.53 '
(dc + ID) / 2 = 0.77 ft
To be conservative, the outlet crown elevation is chosen as the design tailwater elevation, which is : 141.40 feet

Scenario: East Main Street

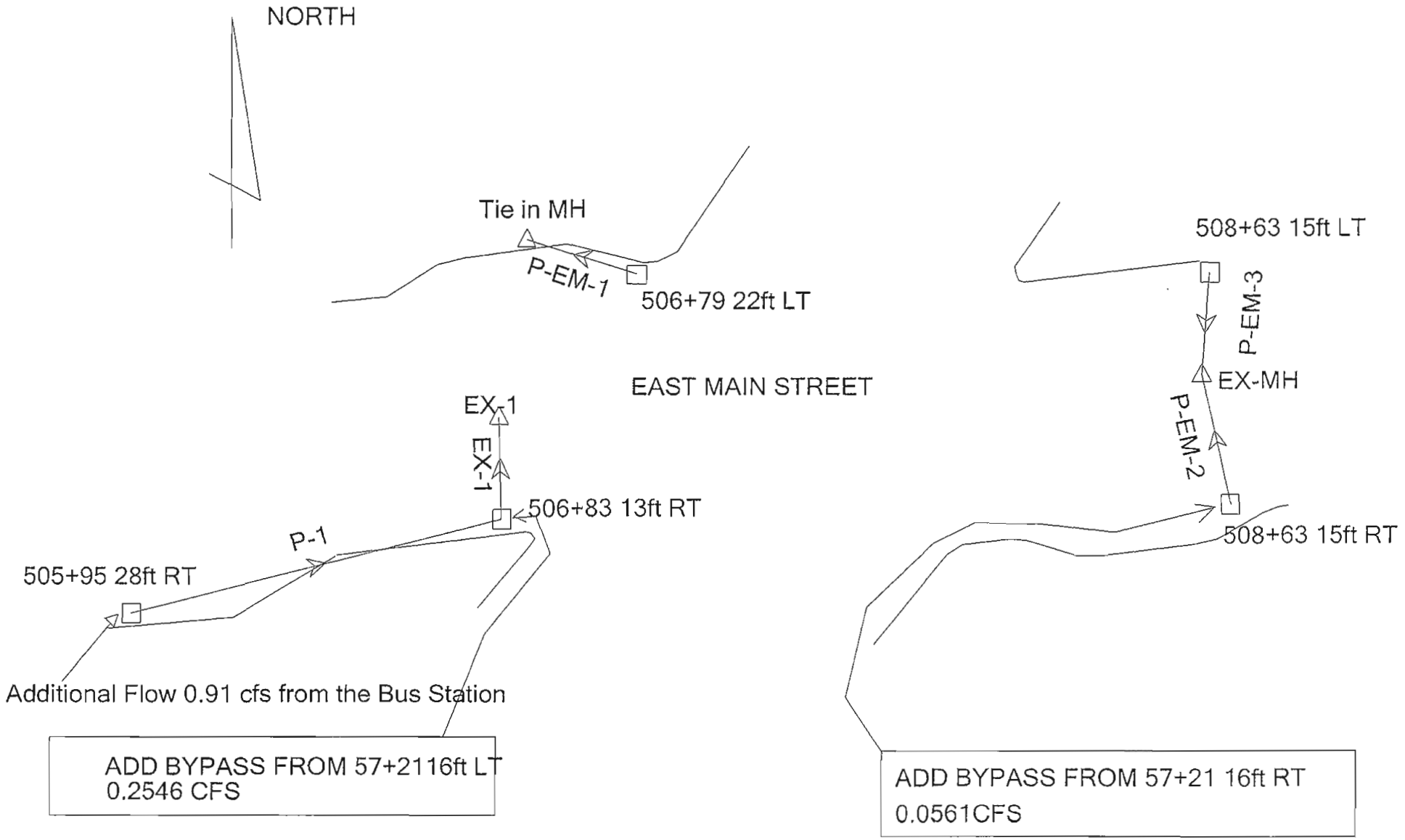

Scenario: East Main Street

Gutter Flow Analysis (10 yr storm event)

Label	Inlet	Area (acres)	Inlet C	Local Tc (min)	Total Inlet CA (acres)	Total Flow To Inlet (cfs)	Longitudinal Slope (ft/ft)	Gutter Cross Slope (ft/ft)	Gutter Ditch Spread (ft)	Intercepted CA (acres)	Gutter Ditch Depth (ft)	Total Bypassed Flow (cfs)	Bypassed CA (acres)	Clogging Factor (%)
505+95 28ft F	Generic Default 100%	0.0000	0.00	0.00	0.0000	0.00		0.020	0.00	0.0000	0.00	0.00	0.0000	
506+79 22ft L	Combination Type C Single Grate - Grate Type A - P	1.1563	0.90	10.00	1.0407	5.04		0.033	11.02	1.0407	0.36	0.00	0.0000	0.0
506+83 13ft F	Grate Type C-L Single Grate - Grate Type A	0.4431	0.90	5.00	0.3988	2.41		0.033	10.77	0.3988	0.36	0.00	0.0000	50.0
508+63 15ft L	Combination Type C Single Grate - Grate Type A - P	0.1037	0.90	5.00	0.0933	0.56		0.033	2.60	0.0933	0.09	0.00	0.0000	0.0
508+63 15ft F	Combination Type C Single Grate - Grate Type A - P	0.1825	0.90	5.00	0.1643	0.99		0.033	3.84	0.1643	0.13	0.00	0.0000	0.0

Note: There is a 0.91 cfs flow from the Busway Station. It is treated as an additional flow. See next page line 2, Total system flow. But in this table, there is no gutter flow analysis at Sta 505+95 28' R.

Scenario: t Main Street

DOT Report

Upstream Node	Downstream Node	Pipe Flow Time (min)	System Flow Time (min)	Upstream Inlet CA (acres)	System CA (acres)	System Intensity (in/hr)	Section Size	Material	Mannings n	Length (ft)	Upstream Invert Elevation (ft)	Downstream Invert Elevation (ft)	Constructed Slope (ft/ft)	Full Capacity (cfs)	Total System Flow (cfs)	Average Velocity (ft/s)
506+83 13ft RT	EX-1	0.09	5.00	0.3988	0.3988	6.00	12 inch	Concrete	0.013	43.00	141.22	140.00	0.028372	6.00	3.32	7.83
505+95 28ft RT	506+83 13ft R	0.30	0.00	0.0000	0.0000	0.00	12 inch	Concrete	0.013	68.00	141.92	141.22	0.010294	3.61	0.91	3.83
506+79 22ft LT	Tie In MH	0.10	10.00	1.0407	1.0407	4.80	12 inch	Concrete	0.013	50.00	140.34	139.00	0.026800	5.83	5.04	8.36
508+63 15ft RT	EX-MH	0.21	5.00	0.1643	0.1643	6.00	12 inch	Concrete	0.013	56.00	141.26	140.40	0.015357	4.41	0.99	4.54
508+63 15ft LT	EX-MH	0.18	5.00	0.0933	0.0933	6.00	12 inch	Concrete	0.013	45.00	141.26	140.40	0.019111	4.93	0.56	4.17

Scenario [illegible]t Main Street

Pipe Report

Label	Upstream Node	Downstream Node	Section Size	Length (ft)	Cons Slope (ft/ft)	Total System Flow (cfs)	Full Capacity (cfs)	Average Velocity (ft/s)	Hydraulic Grade Line Out (ft)	Hydraulic Grade Line In (ft)	Upstream Invert Elevation (ft)	Downstream Invert Elevation (ft)	Upstream Ground Elevation (ft)	Downstream Ground Elevation (ft)	Upstream Cover (ft)	Downstream Cover (ft)	Mannings n
EX-1	506+83 13ft	EX-1	12 inch	43.00	0.028372	3.32	6.00	7.83	141.00	142.00	141.22	140.00	144.43	145.00	2.21	4.00	0.013
P-1	505+95 28ft	506+83 13ft P	12 inch	68.00	0.010294	0.91	3.61	3.83	142.29	142.32	141.92	141.22	146.41	144.43	3.49	2.21	0.013
P-EM	506+79 22ft	Tie In MH	12 inch	50.00	0.026800	5.04	5.83	8.36	140.00	141.26	140.34	139.00	144.95	144.72	3.61	4.72	0.013
P-EM	508+63 15ft	EX-MH	12 inch	56.00	0.015357	0.99	4.41	4.54	141.40	141.68	141.26	140.40	144.33	144.20	2.07	2.80	0.013
P-EM	508+63 15ft	EX-MH	12 inch	45.00	0.019111	0.56	4.93	4.17	141.40	141.57	141.26	140.40	144.33	144.20	2.07	2.80	0.013

Profile: Profile - 1

Scenario: East Main Street

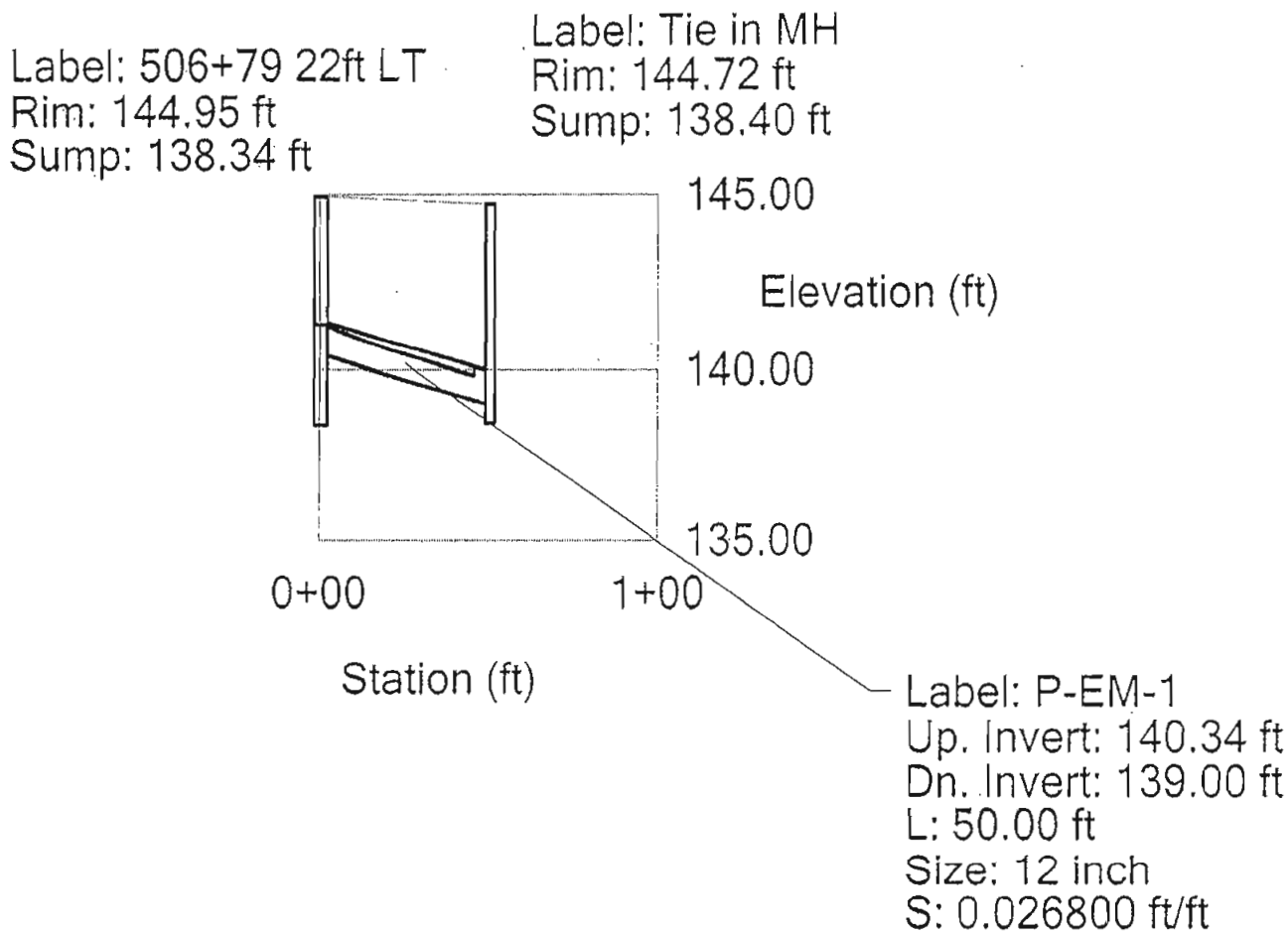

Profile: Profile - 2

Scenario: East Main Street

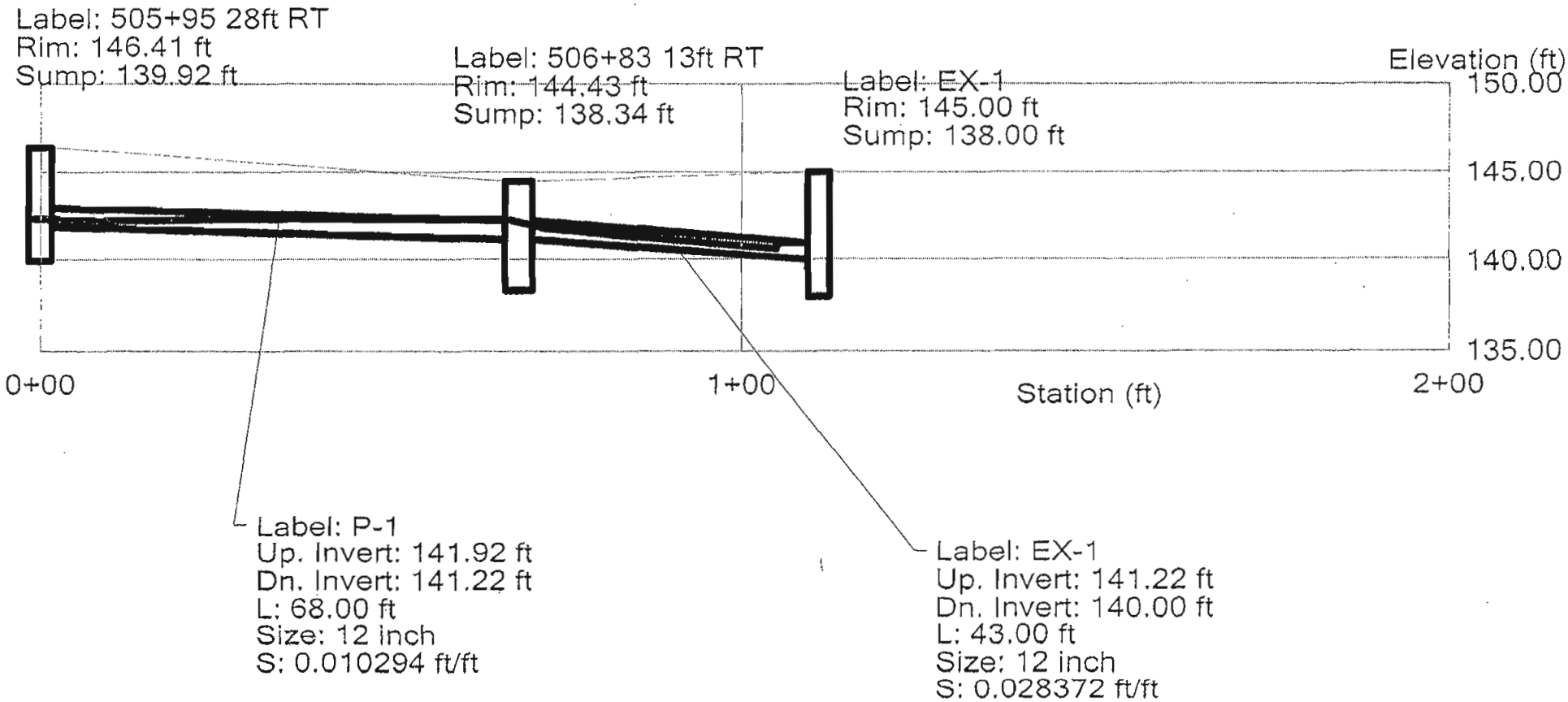

Profile: Profile - 3

Scenario: East Main Street

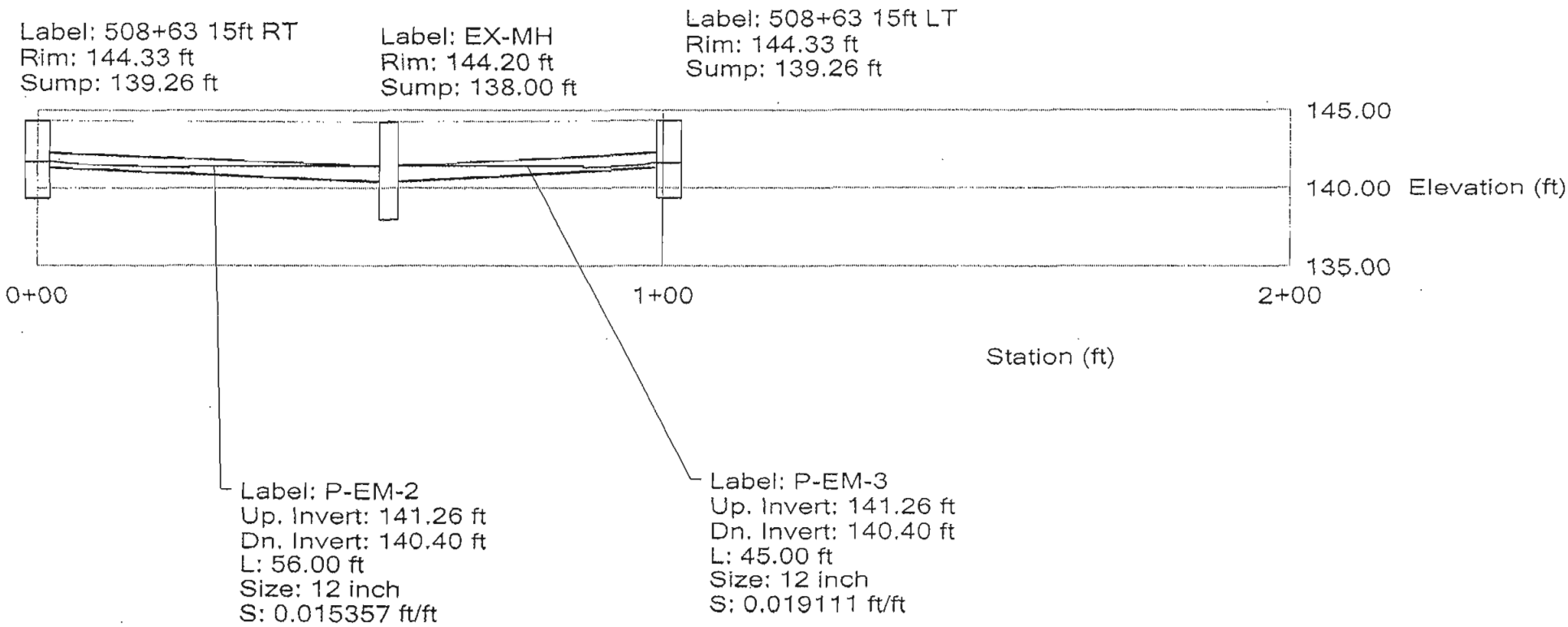

EAST MAIN STREET EXISTING DRAINAGE
SACLE:1"=60'

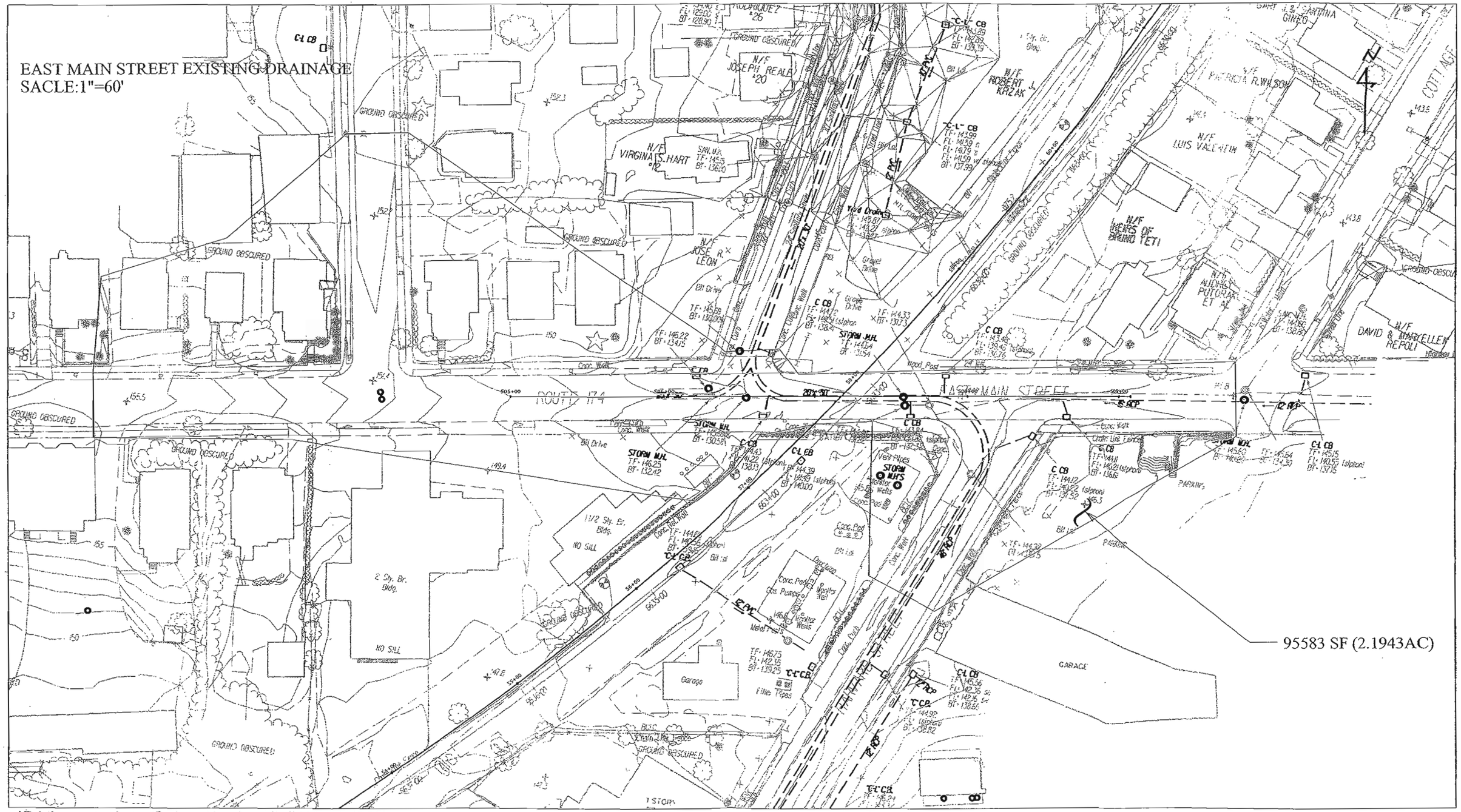

...\Existing-eastmainstrretDrainageMap.dgn 8/20/2009 3:33:49 PM

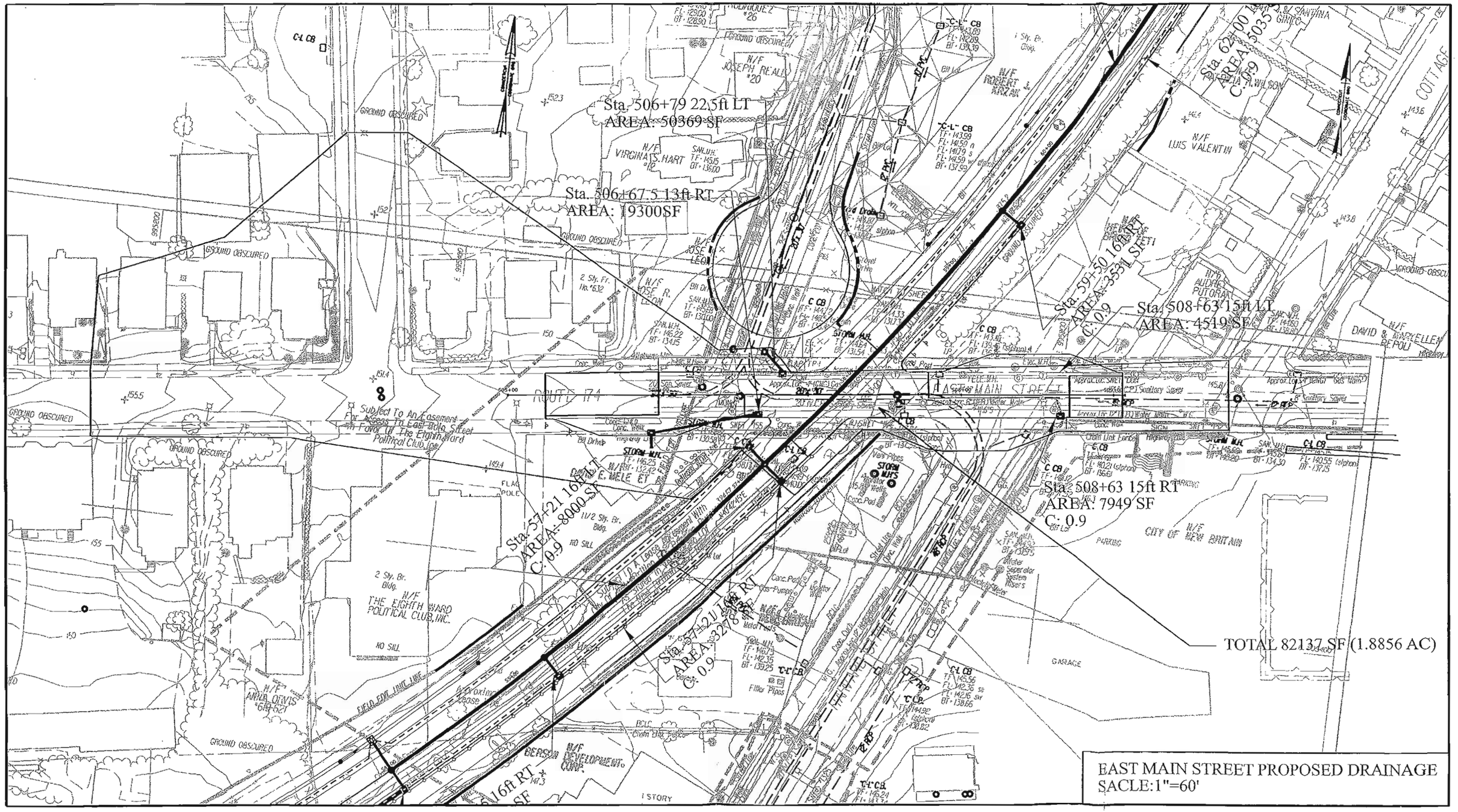
Sta. 506+79 22.5ft LT
AREA: 50369 SF
Sta. 506+67.5 13ft RT
AREA: 19300SF
Sta. 62+00 1
AREA: 5035
C: 0.9
Sta. 59+50 16ft RT
AREA: 3531 SF
C: 0.9
Sta. 508+63 15ft LT
AREA: 4519 SF
Sta. 508+63 15ft RT
AREA: 7949 SF
C: 0.9
Sta. 57+21 16ft LT
AREA: 8000 SF
C: 0.9
Sta. 57+21 16ft RT
AREA: 3278 SF
C: 0.9
TOTAL 82137 SF (1.8856 AC)
EAST MAIN STREET
ROUTE 174
N/F JOSEPH REALL
N/F VIRGINIA S. HART
N/F ROBERT J. KRZAK
N/F LUIS VALENTIN
N/F AUDREY PUTORAL
N/F DAVID & MARYELLEN BEPOLI
N/F THE EIGHTH WARD POLITICAL CLUB, INC.
N/F ANNA ORVIS
N/F BERSON DEVELOPMENT CORP.
N/F CITY OF NEW BRITAIN
GROUND OBSCURED
GARAGE
PARKING
COTTAGE
Subject To An Easement For Access To East Main Street In Favor Of The Eighth Ward Political Club, Inc.
EAST MAIN STREET PROPOSED DRAINAGE
SACLE:1"=60'

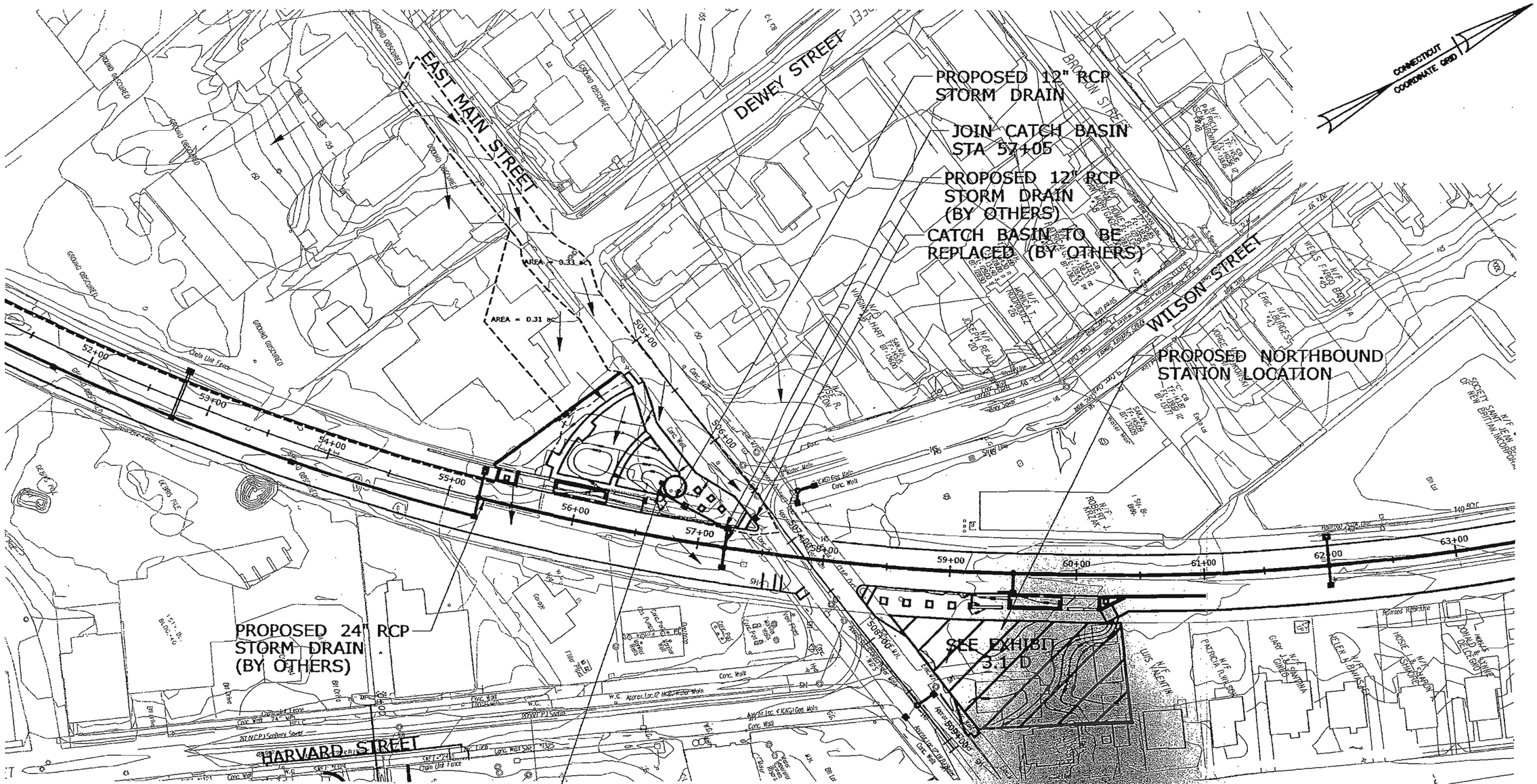

PROPOSED SOUTHBOUND STATION AREA CONDITIONS

SCALE 1" = 80'

160 80 0 160

STATE PROJECT NO.: 88-H039	APPLICATION BY STATE OF CONNECTICUT DEPARTMENT OF TRANSPORTATION	OFFICE OF ENGINEERING	DATE: AUGUST 2009
COUNTY: HARTFORD			SITE EAST MAIN ST. STATION
CITY/TOWN: NEW BRITAIN		SCALE 1=80	EXHIBIT 3.1-C

Appendix G

Drainage System Eight – Florence Street

- Drainage Area Analysis
- Initial Tailwater Estimation
- Hydraulic Grade Line Analysis
- Drainage Area Maps

NEW BRITAIN-HARTFORD BUSWAY
New Britain to Hartford
URS PROJECT NO.36937230

URS
DESIGNED BY: LG DATE:
CHECKED BY: DATE:
SHEET 1 OF 1

Catch Basin	Inlet	Bypass	Drainage Area	Tc	I	Impervious		Pervious		Weighted	Q
Label	Type	Target	(ACRE)	(MIN)	IN/HR	Coeff.	Area (ac)	Coeff.	Area (ac)	Runoff Coefficient	(CFS)
EXISTING FLORENCE STRTEET @ HARVARD STREET											
EX-1	C	N/A	0.1957	5	6.0	0.9	0.1762	0.3		0.90	1.057
EX-2	C	N/A	0.1762	5	6.0	0.9	0.1957	0.3		0.90	0.951
EX-3	C	N/A	0.8052	5	6.0	0.9	0.2402	0.3	0.5650	0.48	2.314
Q from Upstations	N/A	EX-MH	1.6100	10	4.8	N/A	N/A	N/A	N/A	0.60	4.637
TOTAL											8.959
PROPOSED FLORENCE STRTEET @ HARVARD STREET											
EX-1	C	P-1	0.1970	5	6.0	0.9	0.1762	0.3		0.90	1.064
EX-2	C	P-2	0.1762	5	6.0	0.9	0.1970	0.3		0.90	0.951
EX-3	C	N/A	0.1212	5	6.0	0.9	0.1212	0.3		0.90	0.654
P-1	C	N/A	0.0563	5	6.0	0.9	0.0563	0.3		0.90	0.304
P-2	C	N/A	0.6762	5	6.0	0.9	0.1825	0.3	0.4937	0.46	1.874
Q from Upstations	N/A	EX-MH	1.6100	10	4.8	N/A	N/A	N/A	N/A	0.60	4.637
TOTAL											9.485

URS

				Page	of
Job:	**NH-BUSWAY**	Project No.	**36937231**	Sheet	of
Description:	**Initial Tailwater Estimation**	Computed by	**LGAO**	Date	9/18/2009
System Eight		Checked by	DS	Date	9/24/2009

System Eight

Outlet at Sta. 0+28 23ft Left

Outlet Pipe ID = 15 inch

Design Discharge = 8.00 cfs

Pipe Slope = 4.4%

dc (Critical depth) = 1.12 '

(dc + ID) / 2 = 1.19 ft

To be conservative, the outlet crown elevation is chosen as the design tailwater elevation, which is : 141.14 feet

Scenario: 10 Yr Event

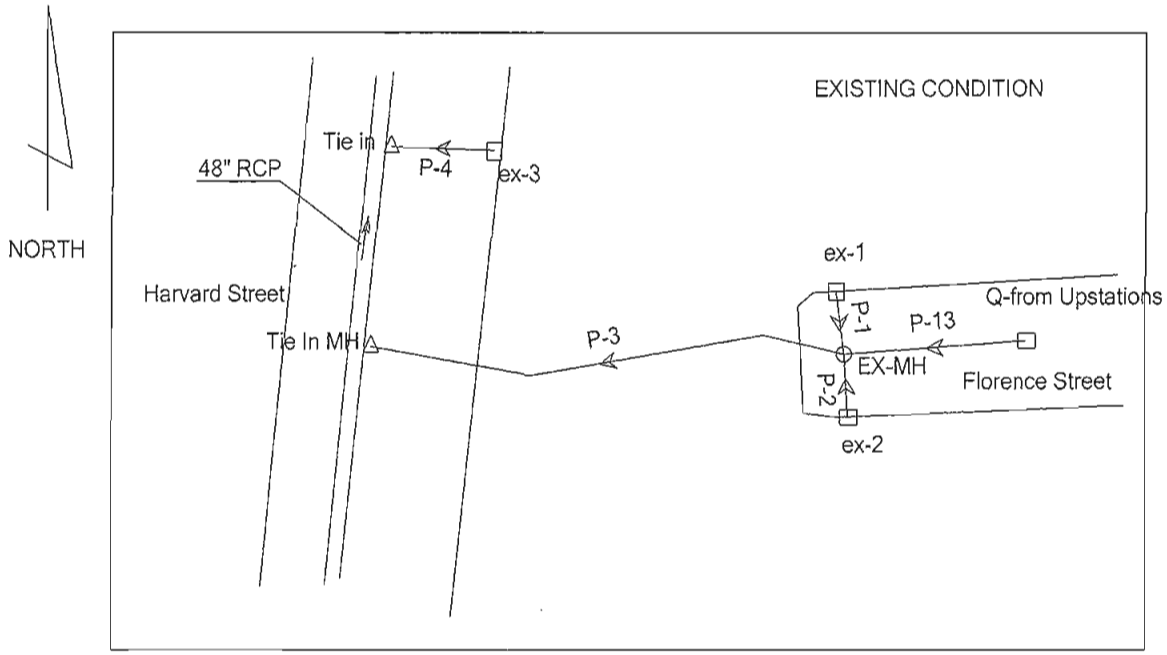

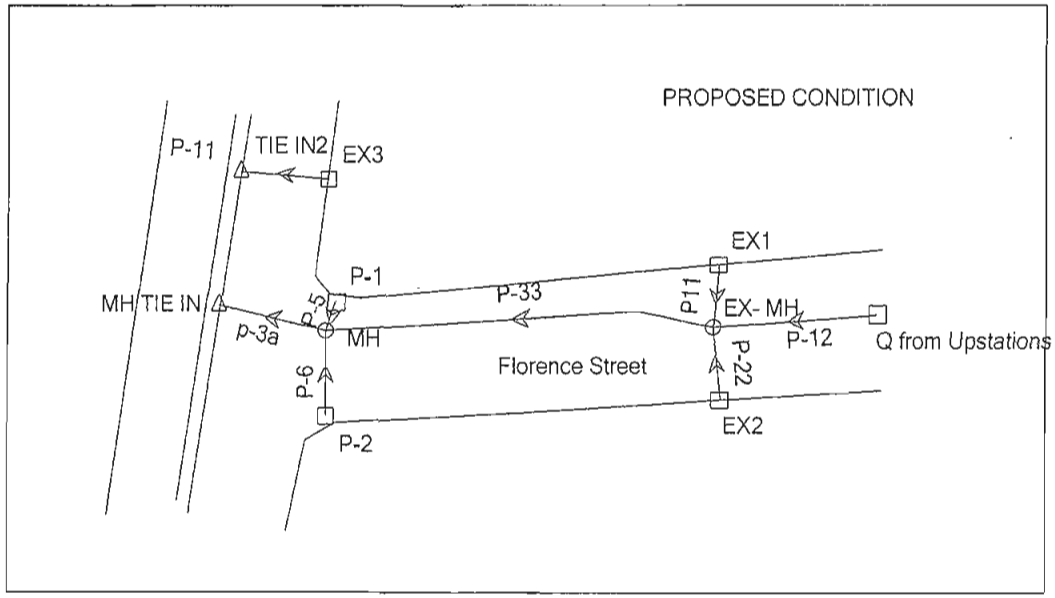

Title: BUSWAY
p:\...\stormcad\florence street-7132010.stm
07/14/10 04:02:22 PM

URS CorporationRocky Hill
© Bentley Systems, Inc. Haestad Methods Solution Center Watertown, CT 06795 USA +1-203-755-1666

Project Engineer: Li Gao
StormCAD v5.6 [05.06.014.00]
Page 1 of 1

Gutter Flow Analysis (10 yr storm event)

Label	Inlet	Area (acres)	Inlet C	Local Tc (min)	Total Inlet CA (acres)	Total Flow To Inlet (cfs)	Longitudinal Slope (ft/ft)	Gutter Cross Slope (ft/ft)	Gutter Ditch Spread (ft)	Intercepted CA (acres)	Gutter Ditch Depth (ft)	Total Bypassed Flow (cfs)	Bypassed CA (acres)	Clogging Factor (%)
ex-1	Combination Type C Single Grate - Grate Type A - P	0.1780	0.90	5.00	0.1602	0.97		0.033	3.77	0.1602	0.12	0.00	0.0000	0.0
ex-2	Combination Type C Single Grate - Grate Type A - P	0.1990	0.90	5.00	0.1791	1.08		0.033	4.08	0.1791	0.13	0.00	0.0000	0.0
ex-3	Combination Type C Single Grate - Grate Type A - P	0.8600	0.48	5.00	0.4128	2.50		0.033	7.07	0.4128	0.23	0.00	0.0000	0.0
EX1	Combination Type C Single Grate - Grate Type A - P	0.1780	0.90	5.00	0.1602	0.97	0.060000	0.030	3.55	0.1320	0.11	0.17	0.0282	0.0
EX2	Combination Type C - Grate Type A - Plain Curb	0.1990	0.90	5.00	0.1791	1.08	0.060000	0.030	3.70	0.1444	0.11	0.21	0.0347	0.0
EX3	Combination Type C - Grate Type A - Plain Curb	0.1270	0.90	5.00	0.1143	0.69		0.020	4.22	0.1143	0.08	0.00	0.0000	0.0
P-1	Combination Type C - Grate Type A - Plain Curb	0.0560	0.90	5.00	0.0786	0.48		0.030	2.48	0.0786	0.07	0.00	0.0000	0.0
P-2	Combination Type C - Grate Type A - Plain Curb	0.6760	0.46	5.00	0.3456	2.09		0.030	6.82	0.3456	0.20	0.00	0.0000	0.0
Q-from Upstat	Generic Default 100%	0.0000	0.00	10.00	0.0000	4.64		0.020	0.00	0.0000	0.00	0.00	0.0000	
Q from Upstat	Generic Default 100%	0.0000	0.00	10.00	0.0000	4.64		0.020	0.00	0.0000	0.00	0.00	0.0000	

Scena[illegible]0 Yr Event

DOT Report

Upstream Node	Downstream Node	Pipe Flow Time (min)	System Flow Time (min)	Upstream Inlet CA (acres)	System CA (acres)	System Intensity (in/hr)	Section Size	Material	Mannings n	Length (ft)	Upstream Invert Elevation (ft)	Downstream Invert Elevation (ft)	Constructed Slope (ft/ft)	Full Capacity (cfs)	Total System Flow (cfs)	Average Velocity (ft/s)
ex-1	EX-MH	0.07	5.00	0.1602	0.1602	6.00	12 inch	Concrete	0.013	13.40	146.28	146.21	0.005224	2.57	0.97	3.05
ex-2	EX-MH	0.06	5.00	0.1791	0.1791	6.00	12 inch	Concrete	0.013	12.00	146.42	146.36	0.005000	2.52	1.08	3.09
EX-MH	Tie In MH	0.21	10.32	N/A	0.3393	4.77	15 inch	Corrugated HDP	0.012	143.00	146.21	139.89	0.044196	14.71	6.27	11.51
MH	MH TIE IN	0.04	10.49	N/A	0.7007	4.75	15 inch	Corrugated HDP	0.012	29.00	141.17	139.89	0.044138	14.70	8.00	12.23
ex-3	Tie in	0.01	5.00	0.4128	0.4128	6.00	12 inch	Concrete	0.013	10.00	140.34	139.00	0.134000	13.04	2.50	12.80
P-1	MH	0.03	5.00	0.0504	0.0786	6.00	12 inch	Concrete	0.013	4.00	142.80	142.78	0.005000	2.52	0.48	2.46
P-2	MH	0.11	5.00	0.3110	0.3456	6.00	12 inch	Concrete	0.013	25.00	142.80	142.67	0.005200	2.57	2.09	3.65
EX3	TIE IN2	0.02	5.00	0.1143	0.1143	6.00	12 inch	Concrete	0.013	10.00	140.34	139.00	0.134000	13.04	0.69	8.81
Q from Upstation	EX- MH	0.32	10.00	0.0000	0.0000	0.00	15 inch	Corrugated HDP	0.012	172.00	150.94	146.21	0.027500	11.60	4.64	8.93
Q-from Upstatior	EX-MH	0.32	10.00	0.0000	0.0000	0.00	15 inch	Corrugated HDP	0.012	172.00	150.94	146.21	0.027500	11.60	4.64	8.93
EX2	EX- MH	0.07	5.00	0.1791	0.1444	6.00	12 inch	Concrete	0.013	12.00	146.42	146.36	0.005000	2.52	0.87	2.92
EX- MH	MH	0.17	10.32	N/A	0.2764	4.77	15 inch	Corrugated HDP	0.012	114.00	146.21	141.17	0.044211	14.71	5.97	11.36
EX1	EX- MH	0.08	5.00	0.1602	0.1320	6.00	12 inch	Concrete	0.013	13.40	146.28	146.21	0.005224	2.57	0.80	2.89

Scena[illegible]0 Yr Event

Pipe Report

Label	Upstream Node	Downstream Node	Section Size	Length (ft)	Cons Slope (ft/ft)	Total System Flow (cfs)	Full Capacity (cfs)	Average Velocity (ft/s)	Hydraulic Grade Line Out (ft)	Hydraulic Grade Line In (ft)	Upstream Invert Elevation (ft)	Downstream Invert Elevation (ft)	Upstream Ground Elevation (ft)	Downstream Ground Elevation (ft)	Upstream Cover (ft)	Downstream Cover (ft)	Mannings n
P-1	ex-1	EX-MH	12 inch	13.40	0.005224	0.97	2.57	3.05	147.22	147.23	146.28	146.21	150.58	150.68	3.30	3.47	0.013
P-2	ex-2	EX-MH	12 inch	12.00	0.005000	1.08	2.52	3.09	147.22	147.23	146.42	146.36	150.72	150.68	3.30	3.32	0.013
P-3	EX-MH	Tie In MH	15 inch	143.00	0.044196	6.27	14.71	11.51	141.14	147.22	146.21	139.89	150.68	145.00	3.22	3.86	0.012
p-3a	MH	MH TIE IN	15 inch	29.00	0.044138	8.00	14.70	12.23	141.14	142.28	141.17	139.89	146.00	146.69	3.58	5.55	0.012
P-4	ex-3	Tie in	12 inch	10.00	0.134000	2.50	13.04	12.80	140.00	141.02	140.34	139.00	144.92	145.00	3.58	5.00	0.013
P-5	P-1	MH	12 inch	4.00	0.005000	0.48	2.52	2.46	143.07	143.09	142.80	142.78	145.80	146.00	2.00	2.22	0.013
P-6	P-2	MH	12 inch	25.00	0.005200	2.09	2.57	3.65	143.29	143.48	142.80	142.67	145.80	146.00	2.00	2.33	0.013
P-11	EX3	TIE IN2	12 inch	10.00	0.134000	0.69	13.04	8.81	140.00	140.69	140.34	139.00	144.92	145.50	3.58	5.50	0.013
P-12	Q from Upsta	EX- MH	15 inch	172.00	0.027500	4.64	11.60	8.93	147.20	151.81	150.94	146.21	156.94	151.00	4.75	3.54	0.012
P-13	Q-from Upsta	EX-MH	15 inch	172.00	0.027500	4.64	11.60	8.93	147.22	151.81	150.94	146.21	156.94	150.68	4.75	3.22	0.012
P-22	EX2	EX- MH	12 inch	12.00	0.005000	0.87	2.52	2.92	147.20	147.20	146.42	146.36	150.72	151.00	3.30	3.64	0.013
P-33	EX- MH	MH	15 inch	114.00	0.044211	5.97	14.71	11.36	142.28	147.20	146.21	141.17	151.00	146.00	3.54	3.58	0.012
P11	EX1	EX- MH	12 inch	13.40	0.005224	0.80	2.57	2.89	147.20	147.20	146.28	146.21	150.58	151.00	3.30	3.79	0.013

Profile: Profile - 1

Scenario: 10 Yr Event

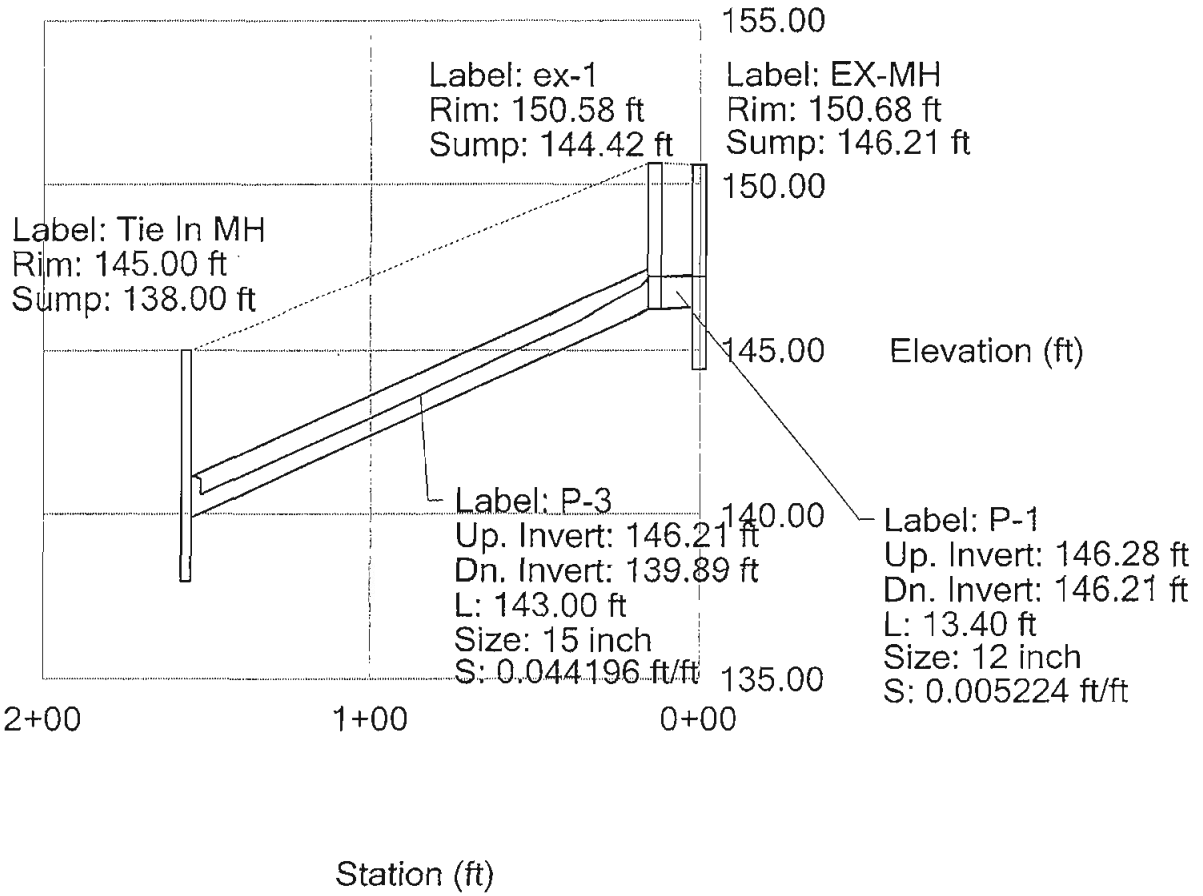

Profile: Profile - 2

Scenario: 10 Yr Event

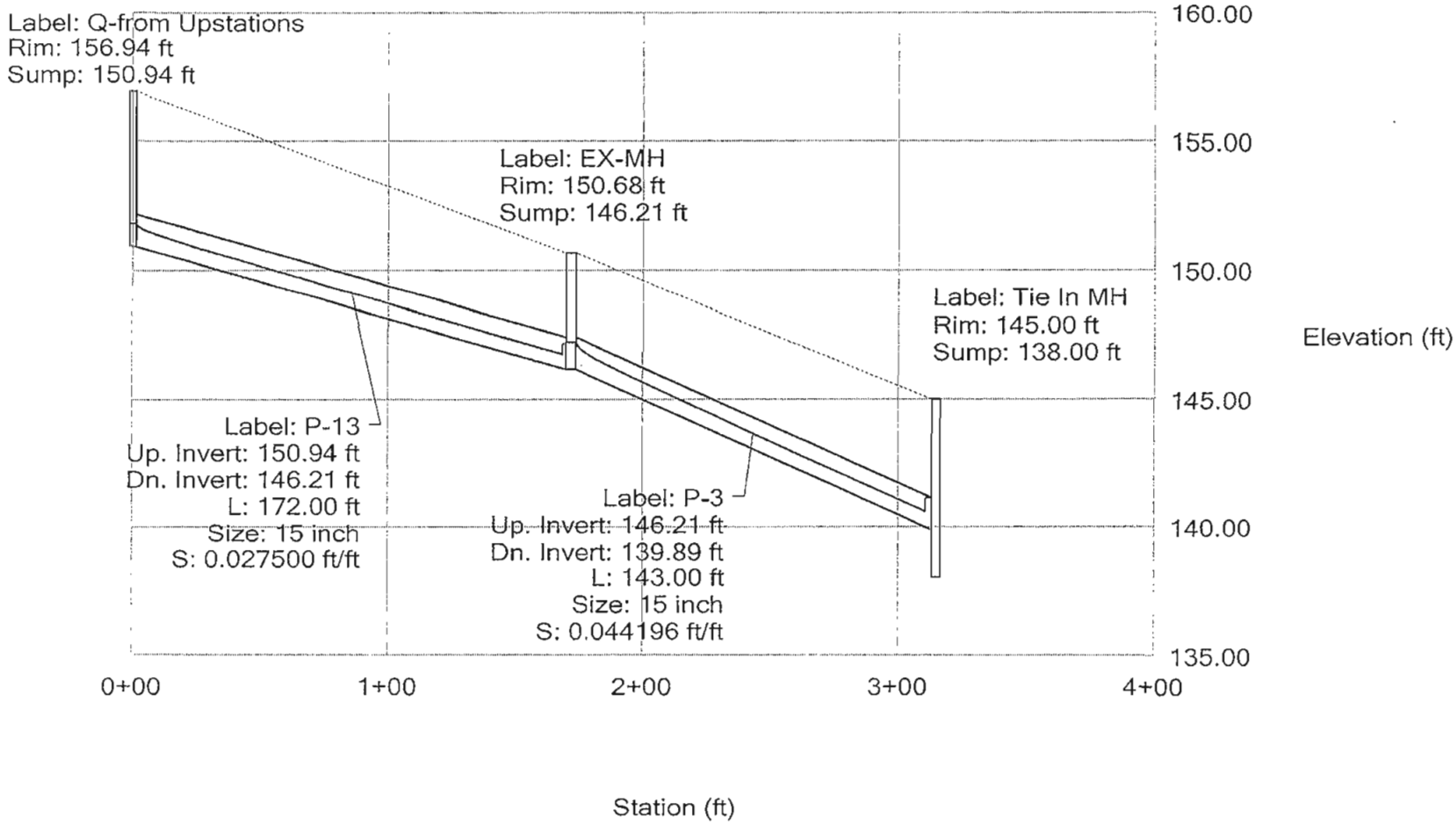

Profile: Profile - 3

Scenario: 10 Yr Event

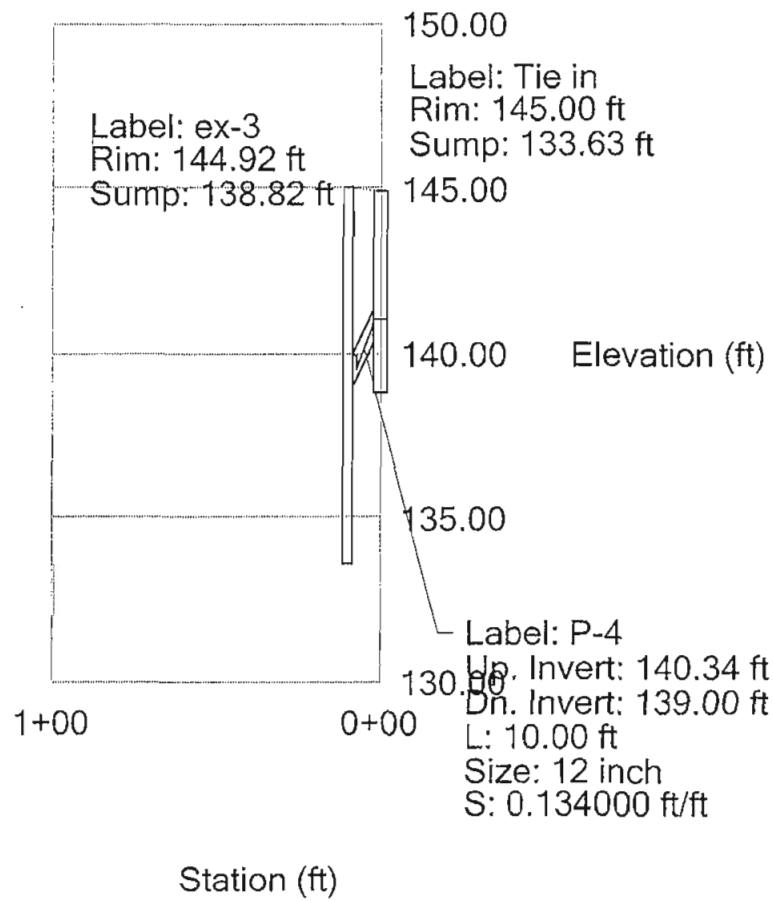

Profile: Profile - 4

Scenario: 10 Yr Event

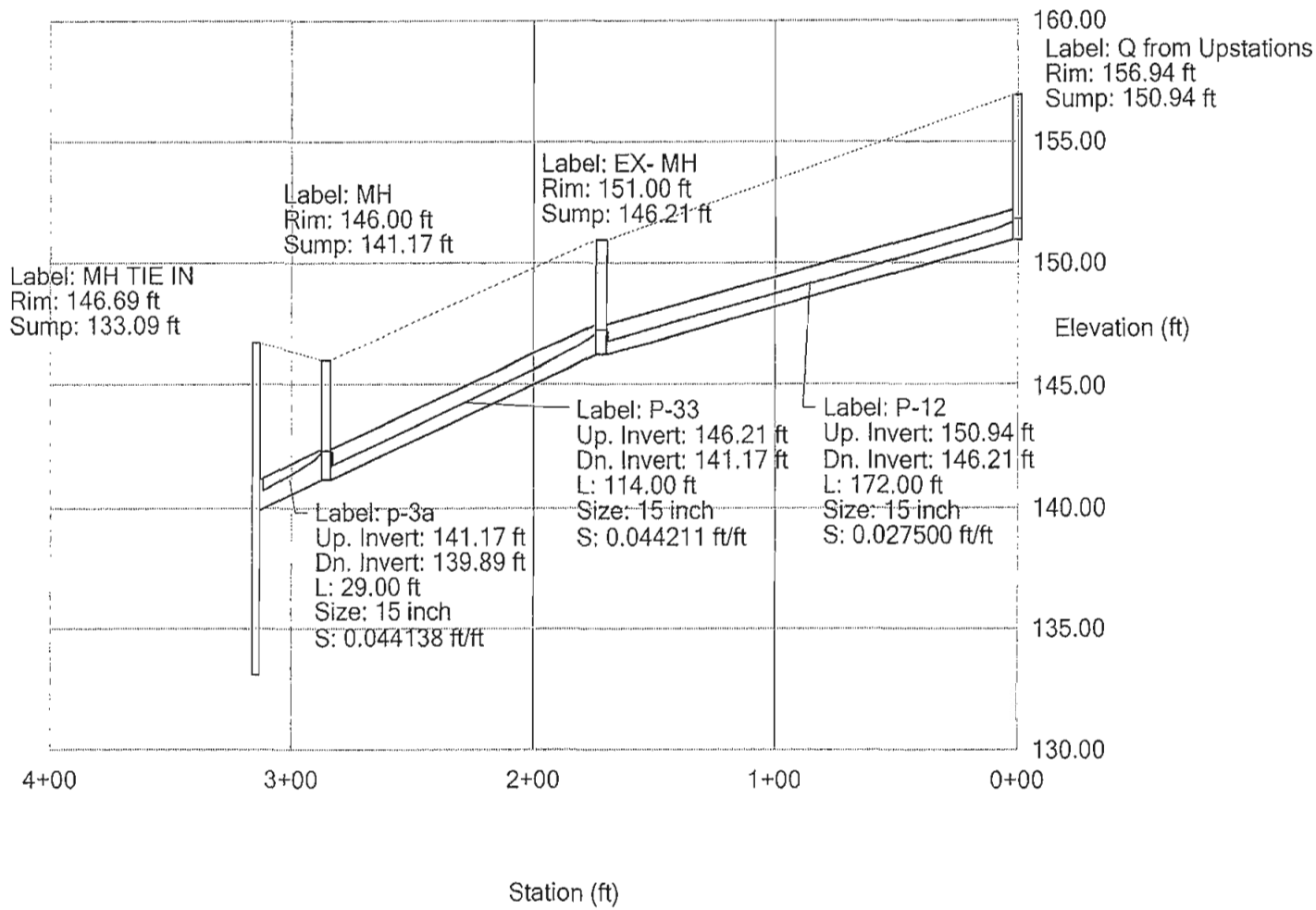

Profile: Profile - 5

Scenario: 10 Yr Event

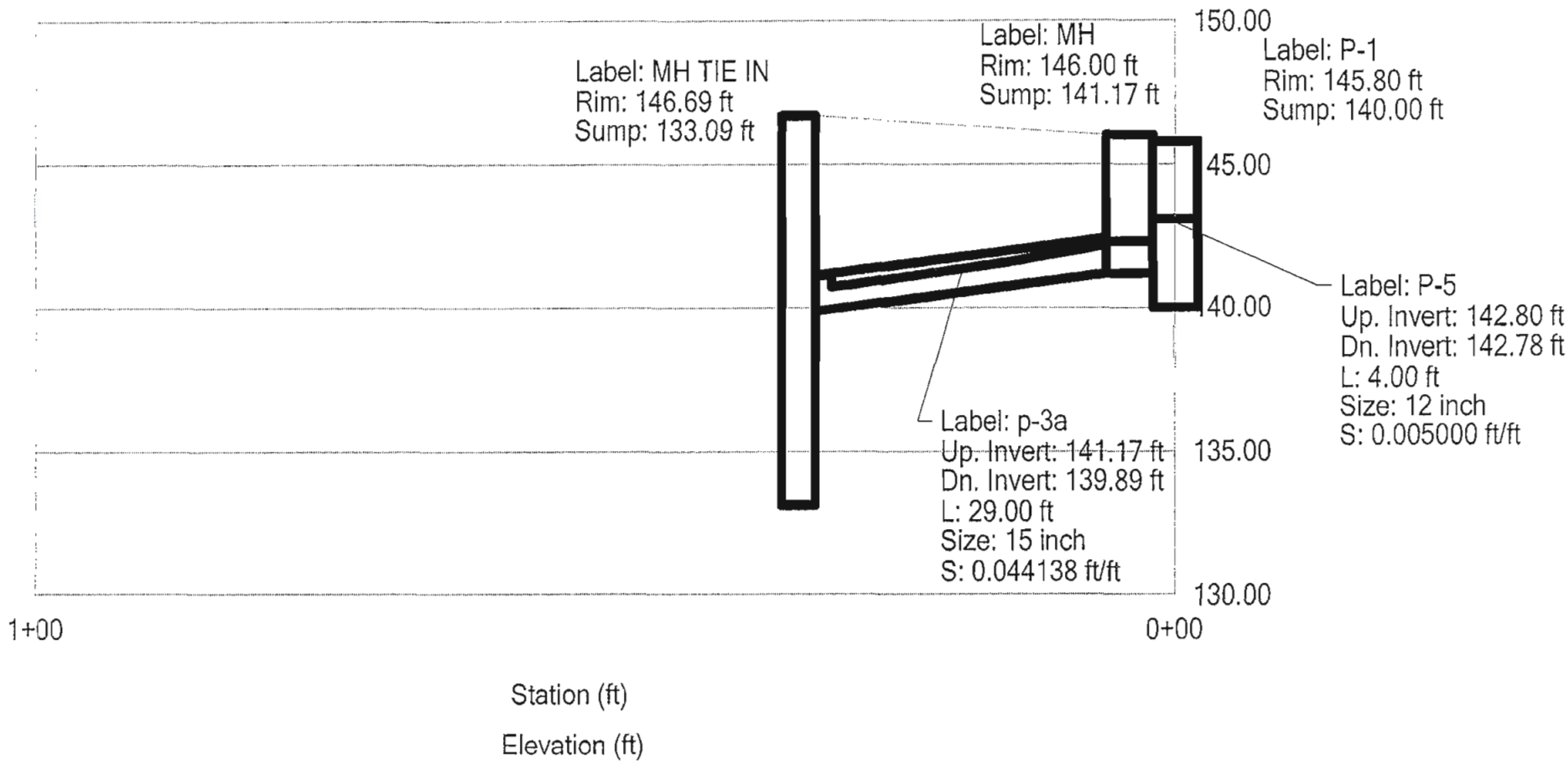

Profile: Profile - 6

Scenario: 10 Yr Event

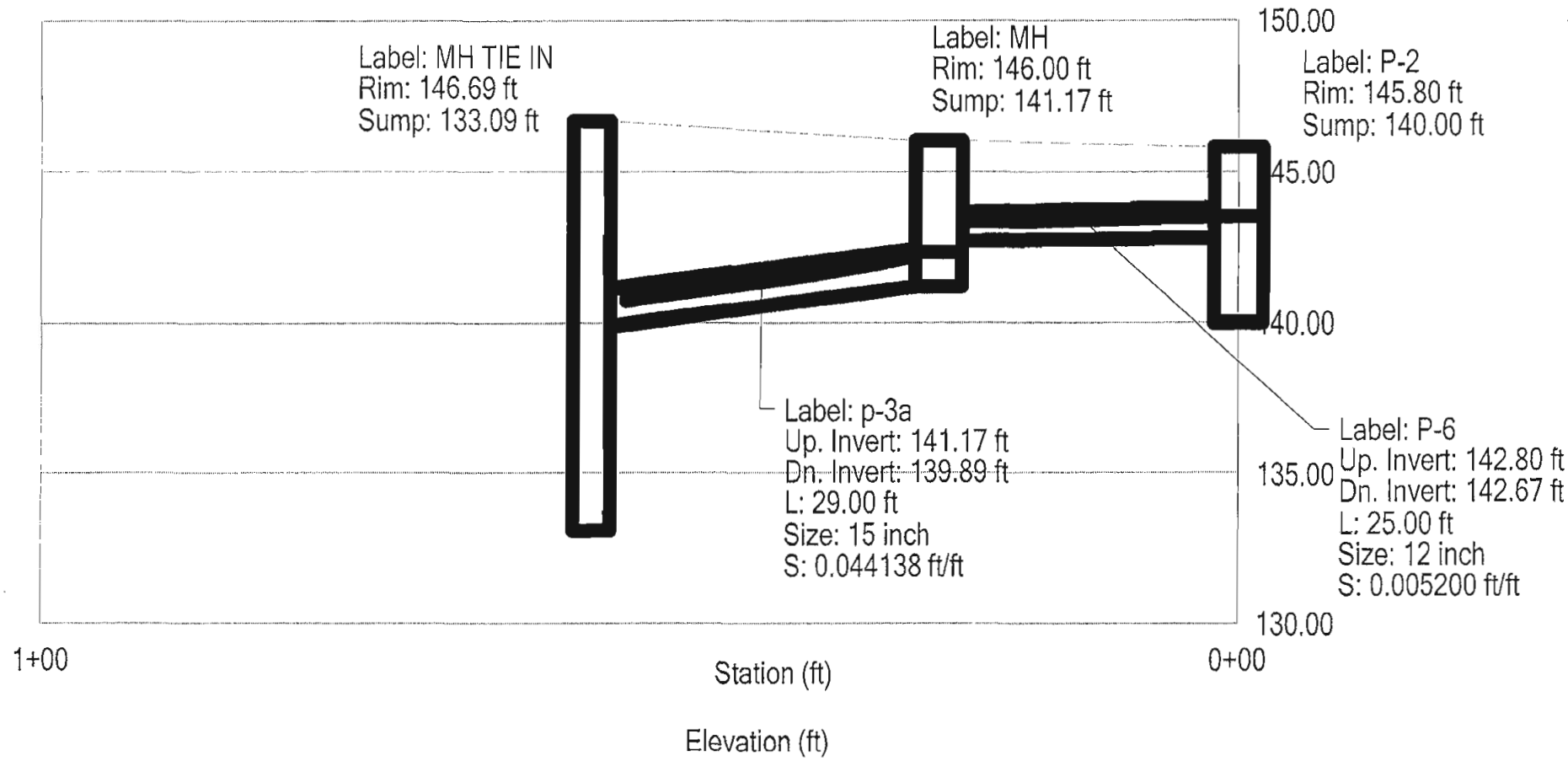

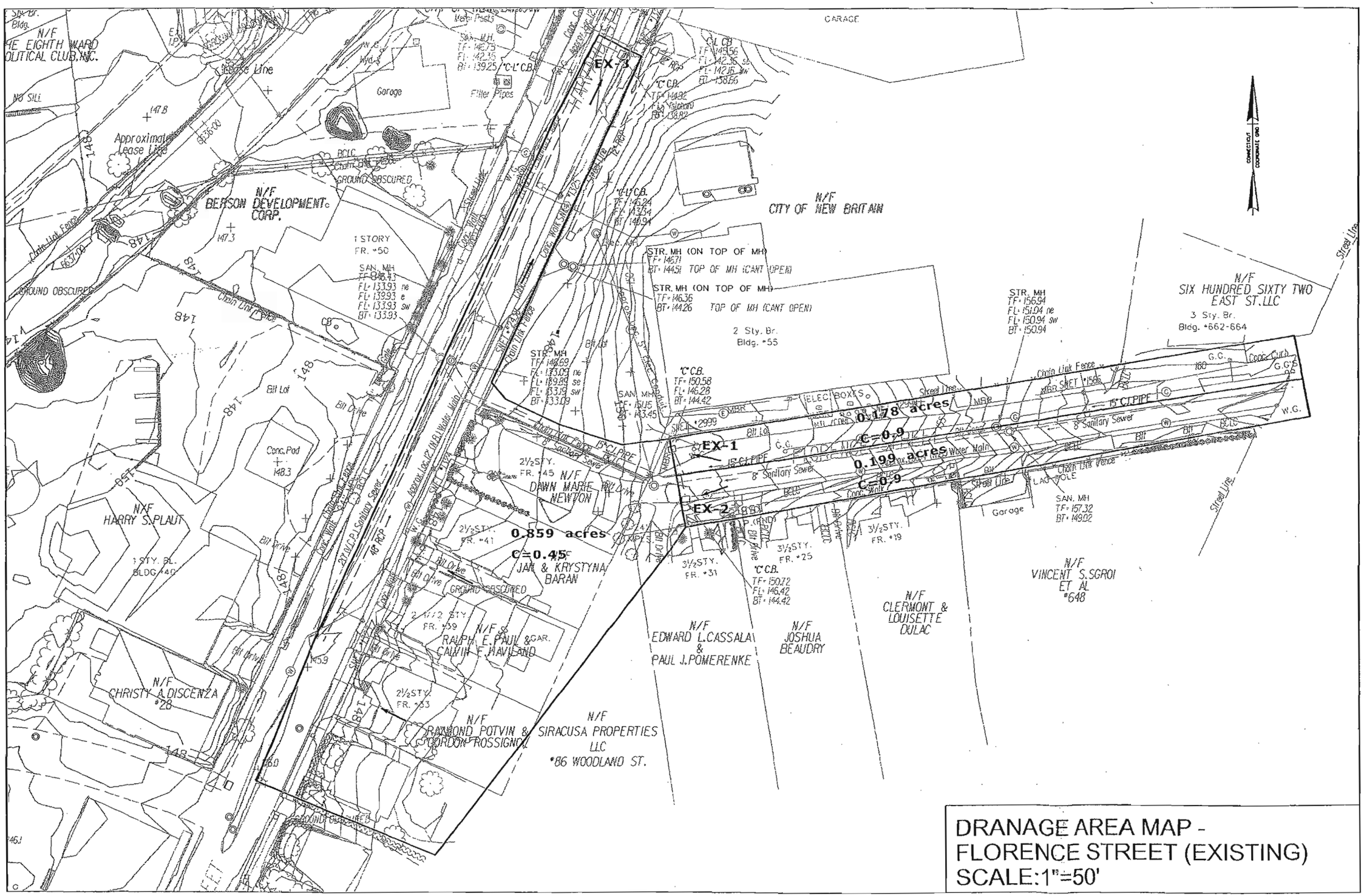

DRANAGE AREA MAP -
FLORENCE STREET (EXISTING)
SCALE:1"=50'

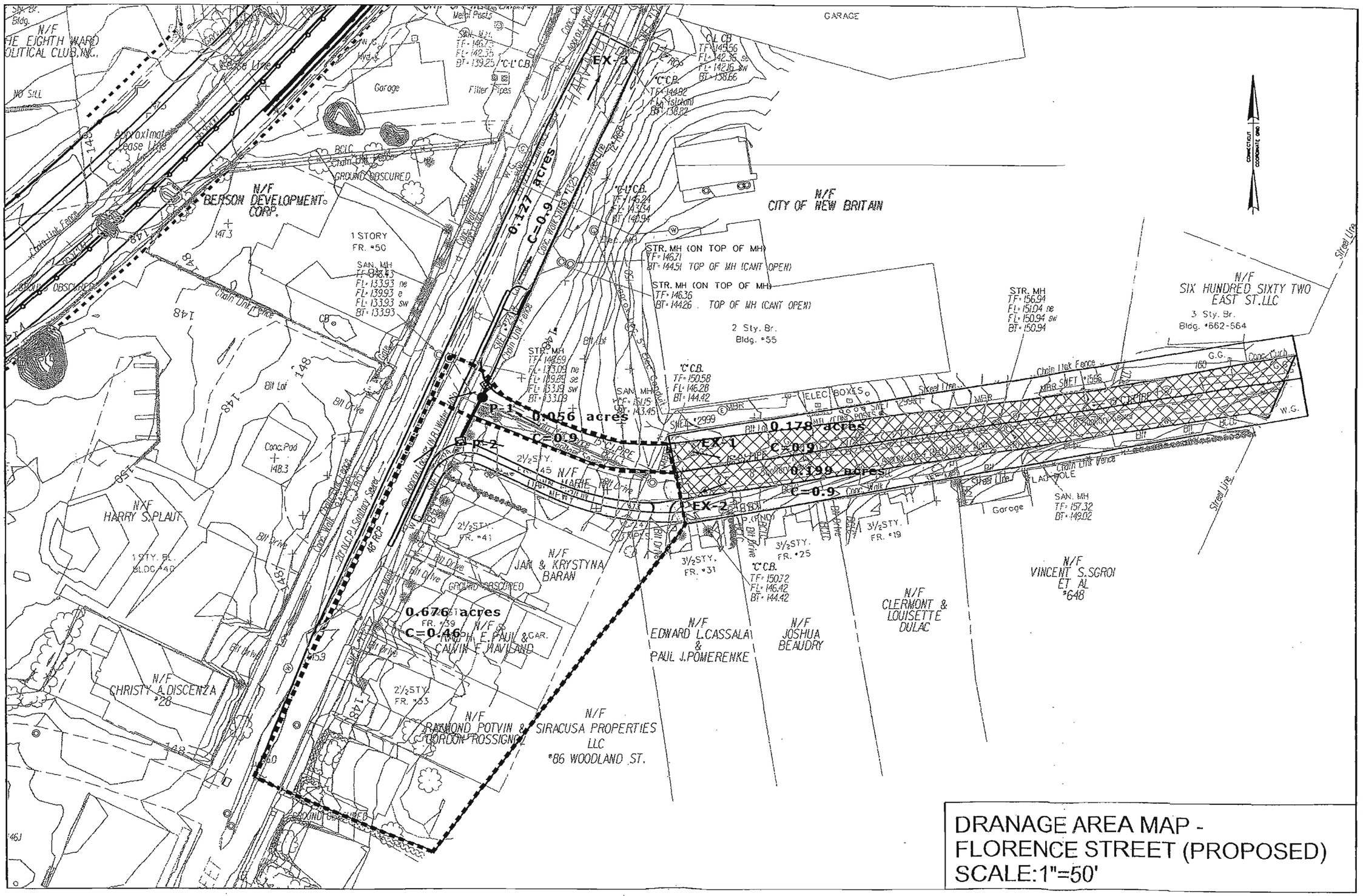

DRANAGE AREA MAP -
FLORENCE STREET (PROPOSED)
SCALE:1"=50'

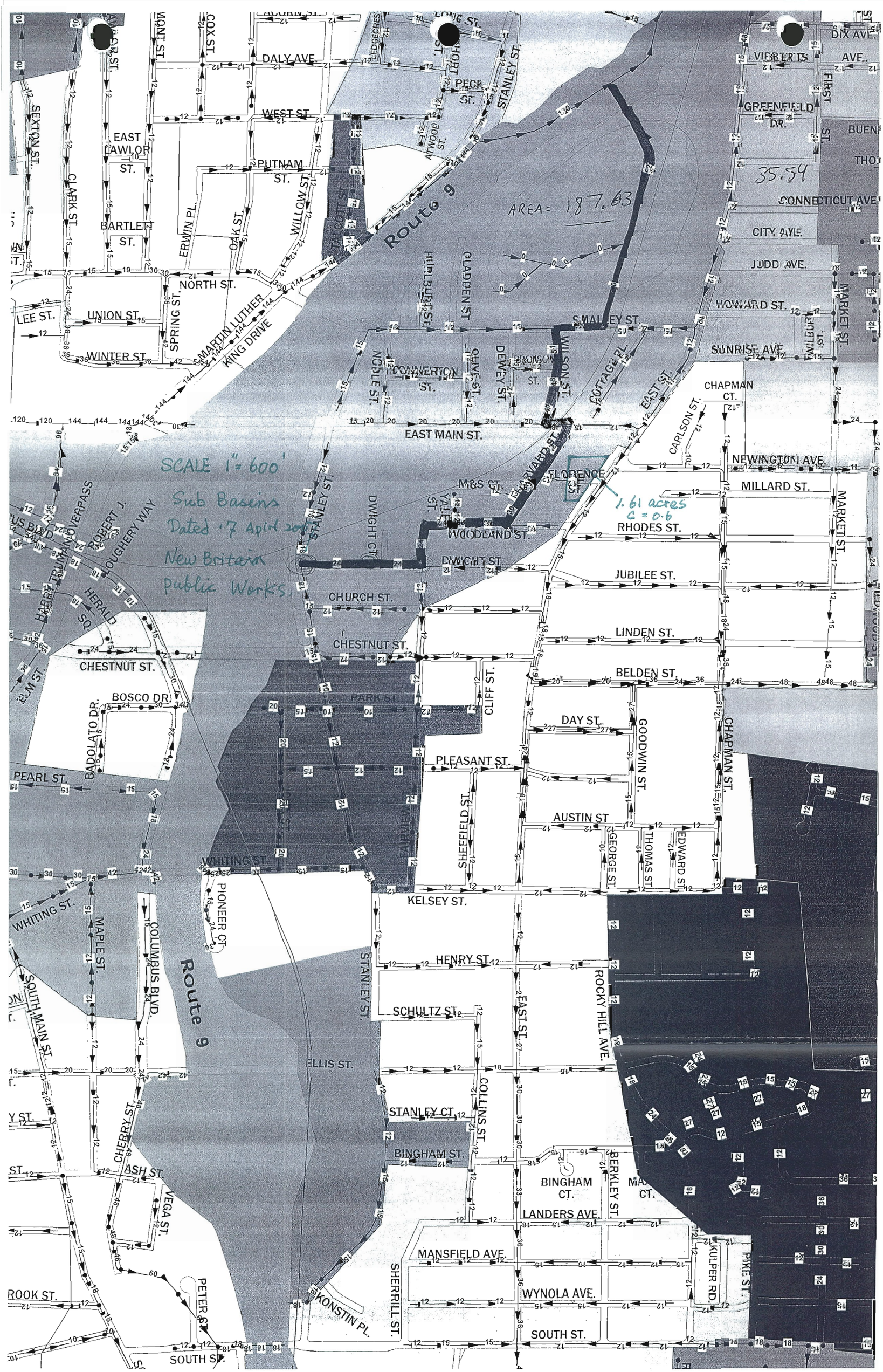
SCALE 1" = 600'
Sub Basins
Dated 17 April 2007
New Britain
Public Works
AREA = 187.03
35.54
1.61 acres
C = 0.6
Route 9
Route 9
DALY AVE
WEST ST
EAST CAWLOR ST.
PUTNAM ST.
BARTLETT ST.
NORTH ST.
UNION ST.
WINTER ST.
LEE ST.
SEXTON ST.
CLARK ST.
ERWIN PL.
OAK ST.
WILLOW ST.
SPRING ST.
MARTIN LUTHER KING DRIVE
COX ST.
PECK ST.
STANLEY ST.
ATWOOD ST.
GLADDEN ST.
HUBBARD ST.
S. MALLEY ST.
WILSON ST.
COTTAGE PL.
EAST ST.
DEWEY ST.
BRONSON ST.
OLIVE ST.
CONVERTON ST.
NOLE ST.
EAST MAIN ST.
CHAPMAN CT.
CARLSON ST.
NEWINGTON AVE.
MILLARD ST.
FLORENCE ST.
M&S CT.
WOODLAND ST.
DWIGHT ST.
DWIGHT CT.
RHODES ST.
JUBILEE ST.
LINDEN ST.
BELDEN ST.
CHURCH ST.
CHESTNUT ST.
CHESTNUT ST.
PARK ST.
CLIFF ST.
DAY ST.
GOODWIN ST.
CHAPMAN ST.
PLEASANT ST.
AUSTIN ST
SHEFFIELD ST.
GEORGE ST.
THOMAS ST.
EDWARD ST.
KELSEY ST.
HENRY ST.
SCHULTZ ST.
ROCKY HILL AVE.
EAST ST.
ELLIS ST.
STANLEY CT.
COLLINS ST.
BINGHAM ST.
BINGHAM CT.
BERKLEY ST.
LANDERS AVE.
MANSFIELD AVE.
WYNOLA AVE.
SOUTH ST.
SHERRILL ST.
KULPER RD.
PIKE ST.
KONSTIN PL.
PETER ST.
VEGA ST.
ASH ST.
CHERRY ST.
SOUTH MAIN ST.
COLUMBUS BLVD.
PIONEER CT.
WHITING ST.
MAPLE ST.
WHITING ST.
PEARL ST.
BADOLATO DR.
BOSCO DR.
ELM ST.
HERALD SQ.
HARRY TRUMAN OVERPASS
ROBERT J. LOUGHERY WAY
US BLVD
DIX AVE.
VIBERTS AVE.
GREENFIELD DR.
CONNECTICUT AVE.
CITY AVE.
JUDD AVE.
HOWARD ST.
SUNRISE AVE.
MARKET ST.
WILBUR ST.

Appendix H

Bridge Deck Drainage Design

- System One - Busway over Route 9 (From Sta. 30+00 to Sta.36+00)
    - Drainage Area Analysis
    - Outlet Pipe Analysis
    - Supper spacing analysis
    - Gutter Flow Analysis
    - Drainage Area Maps
    - Existing Bridge Deck Drainage System Map (As-built drawing)
- System Two - Busway over East Street (From Sta. 104+00 to Sta.110+00)
    - Scupper spacing analysis
    - Gutter Flow Analysis
    - Drainage Area Maps

NEW BRITAIN-HARTFORD BUSWAY
New Britain to Hartford
URS PROJECT NO.36937230
DRAINAGE AREA ANALYSIS - PROPOSED CONDITIONS

URS

COMPUTED BY: LGAO DATE: 9/4/2009
CHECKED BY: DATE:
SHEET 1 OF 1

Sub Basin Label	Inlet Type	Bypass Target	Drainage Area (ACRE)	Tc (MIN)	I10 (IN/HR)			Impervious Coeff.	Impervious Area (ac)	Pervious Coeff.	Pervious Area (ac)	Weighted Cr	Q2 (CFS)	Q10 (CFS)	Q100 (CFS)
ROUTE 9 SB ENTRANCE RAMP EXISTING DRAINAGE AREA															
PRO-A	C-L		0.33	10	3.6	4.8	6.5	0.9	0.20	0.3	0.13	0.66	0.8	1.1	1.8
PRO-B	C-L		0.26	10	4.6	4.8	7.8	0.9	0.00	0.3	0.26	0.30	0.4	0.4	0.8
PRO-C	C-L		0.65	10	3.6	4.8	6.5	0.9	0.30	0.3	0.35	0.58	1.4	1.8	3.1
PRO-D	C-L		0.47	10	3.6	4.8	6.5	0.9	0.20	0.3	0.27	0.55	0.9	1.2	2.1
PRO-E	C-L		0.59	10	3.6	4.8	6.5	0.9	0.01	0.3	0.58	0.31	0.7	0.9	1.5
PRO-F	C-L		0.61	10	3.6	4.8	6.5	0.9	0.27	0.3	0.34	0.56	1.2	1.6	2.8
PRO-G	C-L		0.27	12	3.3	4.5	6.1	0.9	0.01	0.3	0.26	0.33	0.3	0.4	0.7
PRO-H	C-L		0.14	10	3.6	4.8	6.5	0.9	0.06	0.3	0.08	0.57	0.3	0.4	0.6
PRO-I	C-L		0.32	10	3.6	4.8	6.5	0.9	0.02	0.3	0.30	0.34	0.4	0.5	0.9
PRO-J	C-L		0.58	10	3.6	4.8	6.5	0.9	0.24	0.3	0.34	0.55	1.1	1.5	2.6
PRO-K	C-L		0.13	10	3.6	4.8	6.5	0.9	0.06	0.3	0.06	0.61	0.3	0.4	0.6
PRO-L	C-L		0.61	10	3.6	4.8	6.5	0.9	0.21	0.3	0.40	0.51	1.1	1.5	2.5
PRO-M	C-L		0.36	10	3.6	4.8	6.5	0.9	0.11	0.3	0.24	0.49	0.6	0.8	1.4
PRO-N	C-L		0.11	5	4.6	6.0	7.8	0.9	0.11	0.3	0.00	0.90	0.5	0.6	1.0
PRO-O	C		0.16	5	4.6	6.0	7.8	0.9	0.16	0.3	0.00	0.90	0.7	0.9	1.4
PRO-P	C-L		0.51	10	3.6	6.0	6.5	0.9	0.01	0.3	0.50	0.31	0.6	0.9	1.3
PRO-Q	C		0.14	10	3.6	6.0	6.5	0.9	0.11	0.3	0.03	0.79	0.4	0.7	0.9
PRO-PIER4	DOWNSPOUT		0.11	5	4.6	6.0	7.8	0.9	0.11	0.3	0.00	0.90	0.5	0.6	1.0
PRO-PIER3	DOWNSPOUT		0.14	5	4.6	6.0	7.8	0.9	0.14	0.3	0.00	0.90	0.6	0.7	1.2
PRO-PIER2	DOWNSPOUT		0.14	5	4.6	6.0	7.8	0.9	0.14	0.3	0.00	0.90	0.6	0.7	1.2
PRO-PIER1	DOWNSPOUT		0.14	5	4.6	6.0	7.8	0.9	0.14	0.3	0.00	0.90	0.6	0.7	1.2
PRO-ABUT1	DOWNSPOUT		0.15	5	4.6	6.0	7.8	0.9	0.15	0.3	0.00	0.90	0.6	0.8	1.4
TOTAL			6.94						2.78		4.14				

TOTAL DISCHARGE DRAINS TO THE RTE 9 DRAINAGE SYSTEM

AREA	C	TC1(MIN)	TC2 (MIN)	INTENSITY(IN/HR)			DISCHARGE(CFS)		
ACRES		OVERLAND	PIPE FLOW	2yr	10yr	100yr	2yr	10yr	100yr
6.94	0.54	10	5	2.8	4	5.5	10.5	15.0	25.8

NEW BRITAIN-HARTFORD BUSWAY
New Britain to Hartford
URS PROJECT NO.36937230
DRAINAGE AREA ANALYSIS - EXISTING CONDITIONS

URS

COMPUTED BY: LGAO DATE: 9/28/2009
CHECKED BY: DATE:
SHEET 1 OF 1

Sub Basin Label	Inlet Type	Bypass Target	Drainage Area (ACRE)	Tc (MIN)	I2	I10	I100	Impervious Coeff.	Impervious Area (ac)	Pervious Coeff.	Pervious Area (ac)	Weighted Cr	Q2 (CFS)	Q10 (CFS)	Q100 (CFS)
					(IN/HR)										
ROUTE 9 SB ENTRANCE RAMP EXISTING DRAINAGE AREA															
EX-A	C-L		0.34	10	3.6	4.8	6.5	0.9	0.21	0.3	0.14	0.66	0.8	1.1	1.8
EX-B	C-L		0.28	10	3.6	4.8	6.5	0.9	0.00	0.3	0.28	0.30	0.3	0.4	0.7
EX-C	C-L		0.69	10	3.6	4.8	6.5	0.9	0.30	0.3	0.39	0.56	1.4	1.9	3.1
EX-D	C-L		0.54	10	3.6	4.8	6.5	0.9	0.22	0.3	0.32	0.55	1.1	1.4	2.4
EX-E	C-L		0.63	10	3.6	4.8	6.5	0.9	0.01	0.3	0.61	0.31	0.7	0.9	1.6
EX-F	C-L		0.64	10	3.6	4.8	6.5	0.9	0.28	0.3	0.36	0.56	1.3	1.7	2.9
EX-G	C-L		0.27	12	3.3	4.5	6.1	0.9	0.01	0.3	0.26	0.33	0.3	0.4	0.7
EX-H	C-L		0.18	10	3.6	4.8	6.5	0.9	0.08	0.3	0.10	0.56	0.4	0.5	0.8
EX-I	C-L		0.32	10	3.6	4.8	6.5	0.9	0.02	0.3	0.30	0.34	0.4	0.5	0.9
EX-J	C-L		0.58	10	3.6	4.8	6.5	0.9	0.24	0.3	0.34	0.55	1.1	1.5	2.6
EX-K	C-L		0.17	10	3.6	4.8	6.5	0.9	0.09	0.3	0.09	0.60	0.4	0.5	0.8
EX-L	C-L		0.63	10	3.6	4.8	6.5	0.9	0.22	0.3	0.41	0.51	1.2	1.5	2.6
EX-M	C-L		0.37	10	3.6	4.8	6.5	0.9	0.12	0.3	0.25	0.50	0.7	0.9	1.5
EX-N	C-L		0.11	5	4.6	6.0	7.8	0.9	0.11	0.3	0.00	0.90	0.5	0.6	1.0
EX-O	C		0.16	5	4.6	6.0	7.8	0.9	0.16	0.3	0.00	0.90	0.7	0.9	1.4
EX-P	C-L		0.51	10	3.6	4.8	6.5	0.9	0.01	0.3	0.50	0.31	0.6	0.7	1.3
EX-Q	C		0.15	10	3.6	4.8	6.5	0.9	0.12	0.3	0.03	0.79	0.4	0.6	1.0
EX-PIER4	DOWNSPOUT		0.06	5	4.6	6.0	7.8	0.9	0.06	0.3	0.00	0.90	0.3	0.3	0.5
EX-PIER3	DOWNSPOUT		0.07	5	4.6	6.0	7.8	0.9	0.07	1.3	0.00	0.90	0.3	0.4	0.6
EX-PIER2	DOWNSPOUT		0.07	5	4.6	6.0	7.8	0.9	0.07	0.3	0.00	0.90	0.3	0.4	0.6
EX-PIER1	DOWNSPOUT		0.08	5	4.6	6.0	7.8	0.9	0.08	1.3	0.00	0.90	0.3	0.4	0.7
EX-ABUT1	DOWNSPOUT		0.08	5	4.6	6.0	7.8	0.9	0.08	0.3	0.00	0.90	0.3	0.4	0.7
TOTAL			6.94						2.56		4.38				

TOTAL DISCHARGE DRAINS TO THE RTE 9 DRAINAGE SYSTEM

AREA	C	TC1(MIN)	TC2 (MIN)	INTENSITY(IN/HR)			DISCHARGE(CFS)		
ACRES		OVERLAND	PIPE FLOW	2yr	10yr	100yr	2yr	10yr	100yr
6.94	0.52	10	5	2.8	4	5.5	10.1	14.5	24.9

Hydraflow Table of Contents

Comparison Ex. vs. Pro.gpw

Hydraflow Hydrographs by Intelisolve v9.02

Wednesday, Dec 9, 2009

Watershed Model Schematic 1

10 - Year

Summary Report 2

Hydrograph Reports 3

Hydrograph No. 1, Rational, PRO-B 3
Hydrograph No. 2, Rational, DOWNSPOUT-PRO-PIER 4 4
Hydrograph No. 3, Combine, TOTAL-PRO-B 5
Hydrograph No. 4, Rational, DOWNSPOUT-EX-PIER 4 6
Hydrograph No. 5, Rational, EX-B 7
Hydrograph No. 6, Combine, TOTAL EX-B 8
Hydrograph No. 7, Rational, PRO-D 9
Hydrograph No. 8, Rational, DOWNSPOUT-PRO-PIER3 10
Hydrograph No. 9, Combine, TOTAL-PRO-D 11
Hydrograph No. 10, Rational, EX-D 12
Hydrograph No. 11, Rational, DOWNSPOUT-EX-PIER3 13
Hydrograph No. 12, Combine, TOTAL-EX-D 14
Hydrograph No. 13, Rational, PRO-E 15
Hydrograph No. 14, Rational, DOWNSPOUT-PRO-PIER 2 16
Hydrograph No. 15, Combine, TOTAL-PRO-E 17
Hydrograph No. 16, Rational, EX-E 18
Hydrograph No. 17, Rational, DOWNSPOUT-EX-PIER 2 19
Hydrograph No. 18, Combine, TOTAL-EX-E 20
Hydrograph No. 19, Rational, PRO-G 21
Hydrograph No. 20, Rational, DOWNSPOUT-PRO-PIER 1 22
Hydrograph No. 21, Combine, TOTAL-PRO-G 23
Hydrograph No. 22, Rational, DOWNSPOUT-EX-PIER1 24
Hydrograph No. 23, Rational, EX-G 25
Hydrograph No. 24, Combine, TOTAL-EX-G 26
Hydrograph No. 25, Rational, PRO-L 27
Hydrograph No. 26, Rational, DOWNSPOUT-PRO-ABUT 1 28
Hydrograph No. 27, Combine, TOTAL-PRO-L 29
Hydrograph No. 28, Rational, EX-L 30
Hydrograph No. 29, Rational, DOWNSPOUT-EX-ABUT 1 31
Hydrograph No. 30, Combine, TOTAL-EX-L 32

Watershed Model Schematic

Hydraflow Hydrographs by Intelisolve v9.02

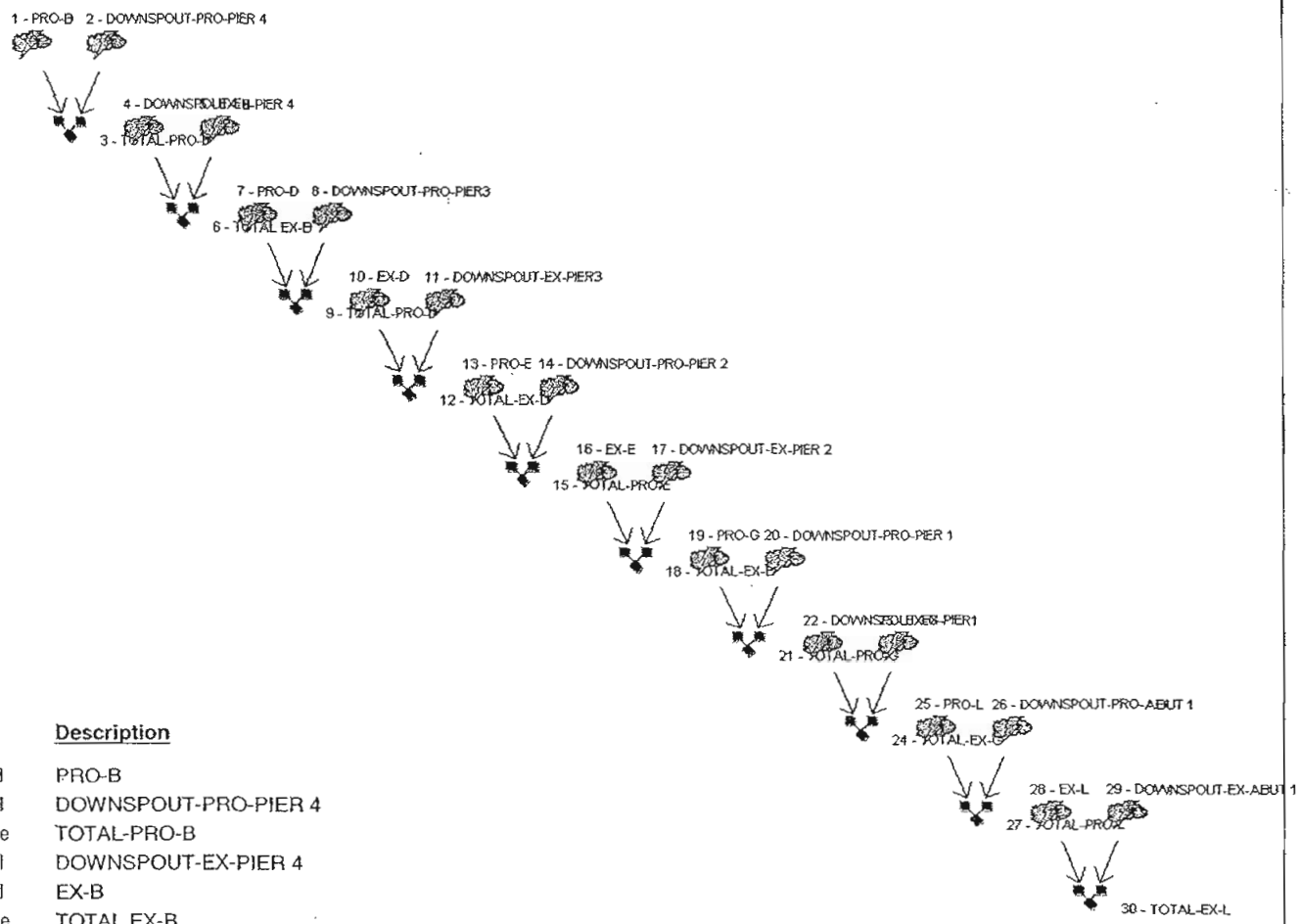

Legend

Hyd.	Origin	Description
1	Rational	PRO-B
2	Rational	DOWNSPOUT-PRO-PIER 4
3	Combine	TOTAL-PRO-B
4	Rational	DOWNSPOUT-EX-PIER 4
5	Rational	EX-B
6	Combine	TOTAL EX-B
7	Rational	PRO-D
8	Rational	DOWNSPOUT-PRO-PIER3
9	Combine	TOTAL-PRO-D
10	Rational	EX-D
11	Rational	DOWNSPOUT-EX-PIER3
12	Combine	TOTAL-EX-D
13	Rational	PRO-E
14	Rational	DOWNSPOUT-PRO-PIER 2
15	Combine	TOTAL-PRO-E
16	Rational	EX-E
17	Rational	DOWNSPOUT-EX-PIER 2
18	Combine	TOTAL-EX-E
19	Rational	PRO-G
20	Rational	DOWNSPOUT-PRO-PIER 1
21	Combine	TOTAL-PRO-G
22	Rational	DOWNSPOUT-EX-PIER1
23	Rational	EX-G
24	Combine	TOTAL-EX-G
25	Rational	PRO-L
26	Rational	DOWNSPOUT-PRO-ABUT 1
27	Combine	TOTAL-PRO-L
28	Rational	EX-L
29	Rational	DOWNSPOUT-EX-ABUT 1
30	Combine	TOTAL-EX-L

Hydrograph Summary Report

Hydraflow Hydrographs by Intelisolve v9.02

Hyd. No.	Hydrograph type (origin)	Peak flow (cfs)	Time interval (min)	Time to peak (min)	Hyd. volume (cuft)	Inflow hyd(s)	Maximum elevation (ft)	Total strge used (cuft)	Hydrograph description
1	Rational	0.375	1	10	225	----	------	------	PRO-B
2	Rational	0.593	1	5	178	----	------	------	DOWNSPOUT-PRO-PIER 4
3	Combine	0.780	1	5	403	1, 2	------	------	TOTAL-PRO-B
4	Rational	0.323	1	5	97	----	------	------	DOWNSPOUT-EX-PIER 4
5	Rational	0.404	1	10	242	----	------	------	EX-B
6	Combine	0.525	1	5	339	4, 5	------	------	TOTAL EX-B
7	Rational	1.242	1	10	745	----	------	------	PRO-D
8	Rational	0.323	1	5	97	----	------	------	DOWNSPOUT-PRO-PIER3
9	Combine	1.242	1	10	842	7, 8	------	------	TOTAL-PRO-D
10	Rational	1.427	1	10	856	----	------	------	EX-D
11	Rational	0.377	1	5	113	----	------	------	DOWNSPOUT-EX-PIER3
12	Combine	1.427	1	10	969	10, 11	------	------	TOTAL-EX-D
13	Rational	0.879	1	10	527	----	------	------	PRO-E
14	Rational	0.755	1	5	226	----	------	------	DOWNSPOUT-PRO-PIER 2
15	Combine	1.194	1	5	754	13, 14	------	------	TOTAL-PRO-E
16	Rational	0.938	1	10	563	----	------	------	EX-E
17	Rational	0.377	1	5	113	----	------	------	DOWNSPOUT-EX-PIER 2
18	Combine	0.938	1	10	676	16, 17	------	------	TOTAL-EX-E
19	Rational	0.428	1	10	257	----	------	------	PRO-G
20	Rational	0.755	1	5	226	----	------	------	DOWNSPOUT-PRO-PIER 1
21	Combine	0.969	1	5	483	19, 20	------	------	TOTAL-PRO-G
22	Rational	0.431	1	5	129	----	------	------	DOWNSPOUT-EX-PIER1
23	Rational	0.428	1	10	257	----	------	------	EX-G
24	Combine	0.645	1	5	386	22, 23	------	------	TOTAL-EX-G
25	Rational	1.495	1	10	897	----	------	------	PRO-L
26	Rational	0.809	1	5	243	----	------	------	DOWNSPOUT-PRO-ABUT 1
27	Combine	1.556	1	5	1,140	25, 26	------	------	TOTAL-PRO-L
28	Rational	1.544	1	10	926	----	------	------	EX-L
29	Rational	0.431	1	5	129	----	------	------	DOWNSPOUT-EX-ABUT 1
30	Combine	1.544	1	10	1,056	28, 29	------	------	TOTAL-EX-L

Hydrograph Report

Hydraflow Hydrographs by Intelisolve v9.02 — Wednesday, Dec 9, 2009

Hyd. No. 1

PRO-B

Hydrograph type	= Rational	Peak discharge	= 0.375 cfs
Storm frequency	= 10 yrs	Time to peak	= 10 min
Time interval	= 1 min	Hyd. volume	= 225 cuft
Drainage area	= 0.260 ac	Runoff coeff.	= 0.3
Intensity	= 4.805 in/hr	Tc by User	= 10.00 min
IDF Curve	= conndot.idf	Asc/Rec limb fact	= 1/1

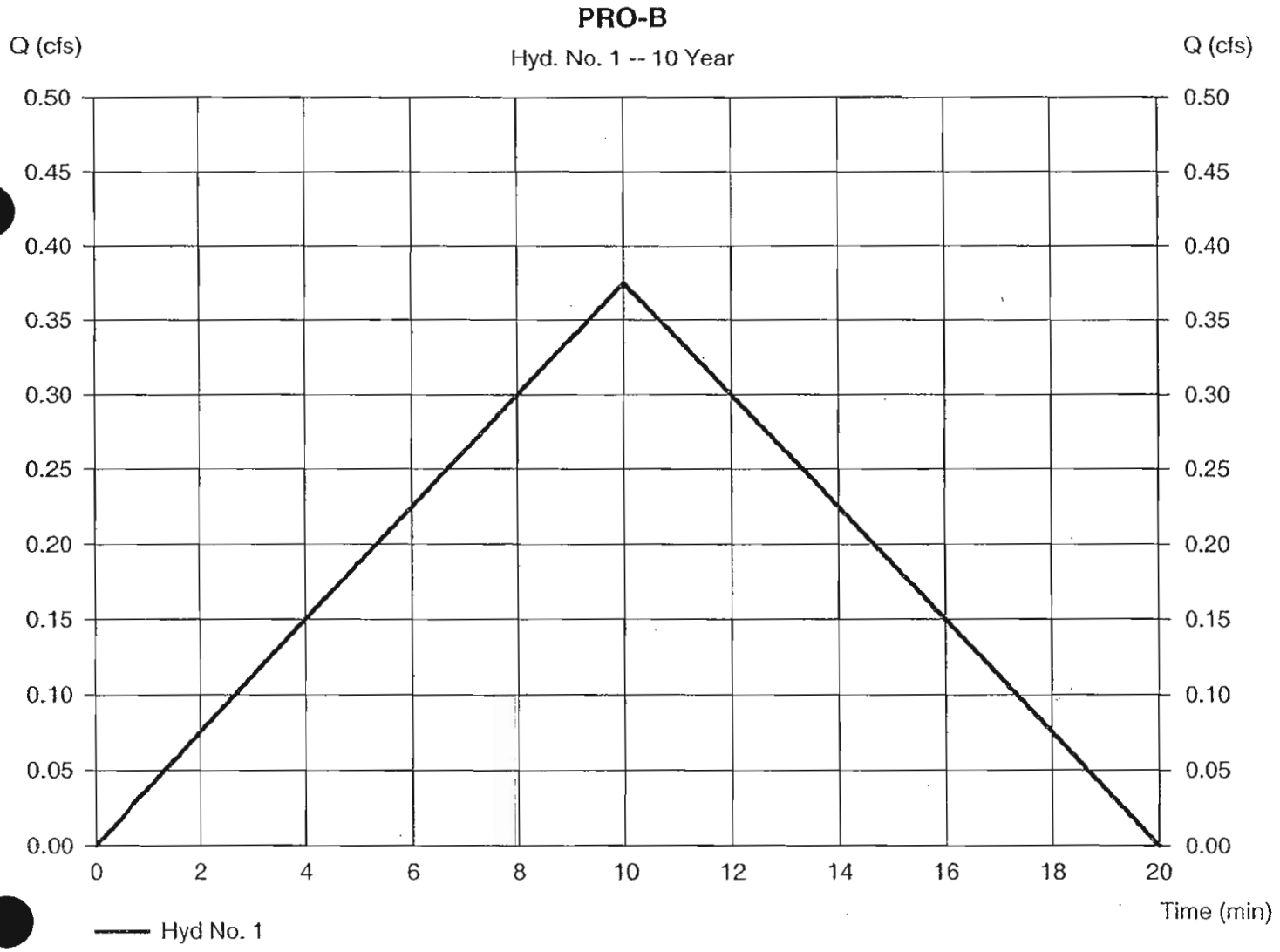

Hydrograph Report

Hydraflow Hydrographs by Intelisolve v9.02 — Wednesday, Dec 9, 2009

Hyd. No. 2

DOWNSPOUT-PRO-PIER 4

Hydrograph type	= Rational	Peak discharge	= 0.593 cfs
Storm frequency	= 10 yrs	Time to peak	= 5 min
Time interval	= 1 min	Hyd. volume	= 178 cuft
Drainage area	= 0.110 ac	Runoff coeff.	= 0.9
Intensity	= 5.990 in/hr	Tc by User	= 5.00 min
IDF Curve	= conndot.idf	Asc/Rec limb fact	= 1/1

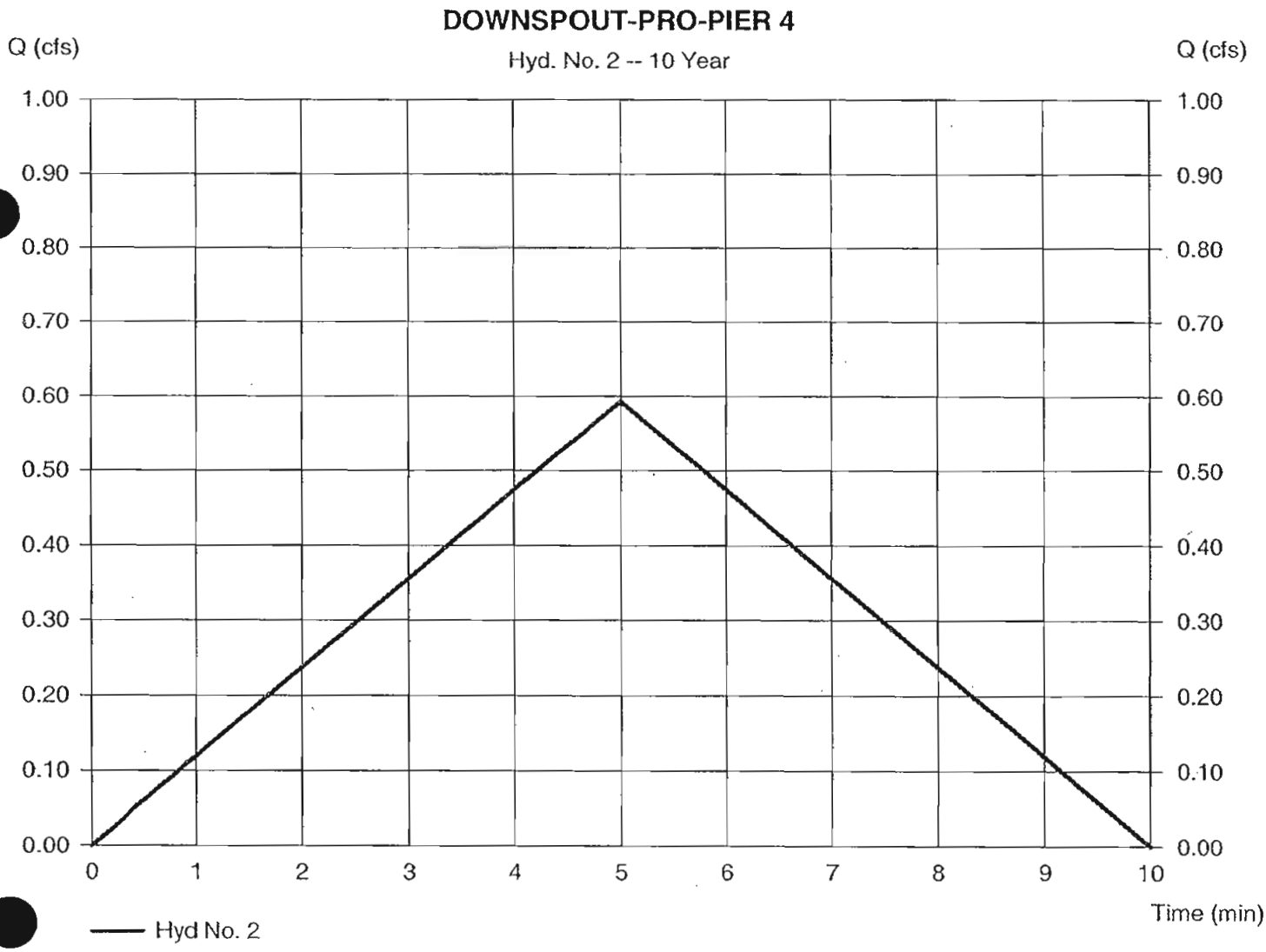

Hydrograph Report

Hydraflow Hydrographs by Intelisolve v9.02 — Wednesday, Dec 9, 2009

Hyd. No. 3

TOTAL-PRO-B

Hydrograph type	= Combine	Peak discharge	= 0.780 cfs
Storm frequency	= 10 yrs	Time to peak	= 5 min
Time interval	= 1 min	Hyd. volume	= 403 cuft
Inflow hyds.	= 1, 2	Contrib. drain. area	= 0.370 ac

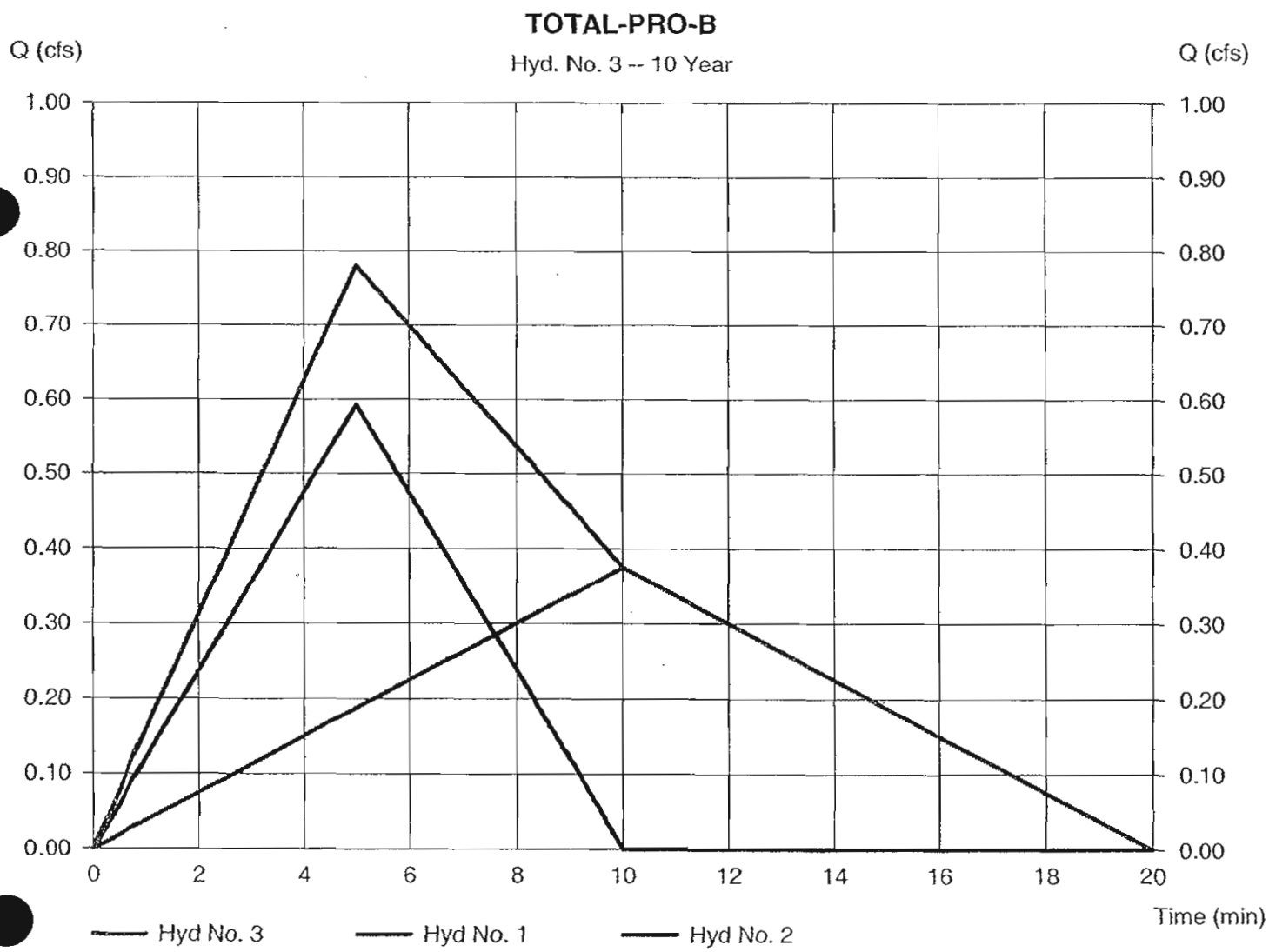

Hydrograph Report

Hydraflow Hydrographs by Intelisolve v9.02 — Wednesday, Dec 9, 2009

Hyd. No. 4

DOWNSPOUT-EX-PIER 4

Hydrograph type	= Rational	Peak discharge	= 0.323 cfs
Storm frequency	= 10 yrs	Time to peak	= 5 min
Time interval	= 1 min	Hyd. volume	= 97 cuft
Drainage area	= 0.060 ac	Runoff coeff.	= 0.9
Intensity	= 5.990 in/hr	Tc by User	= 5.00 min
IDF Curve	= conndot.idf	Asc/Rec limb fact	= 1/1

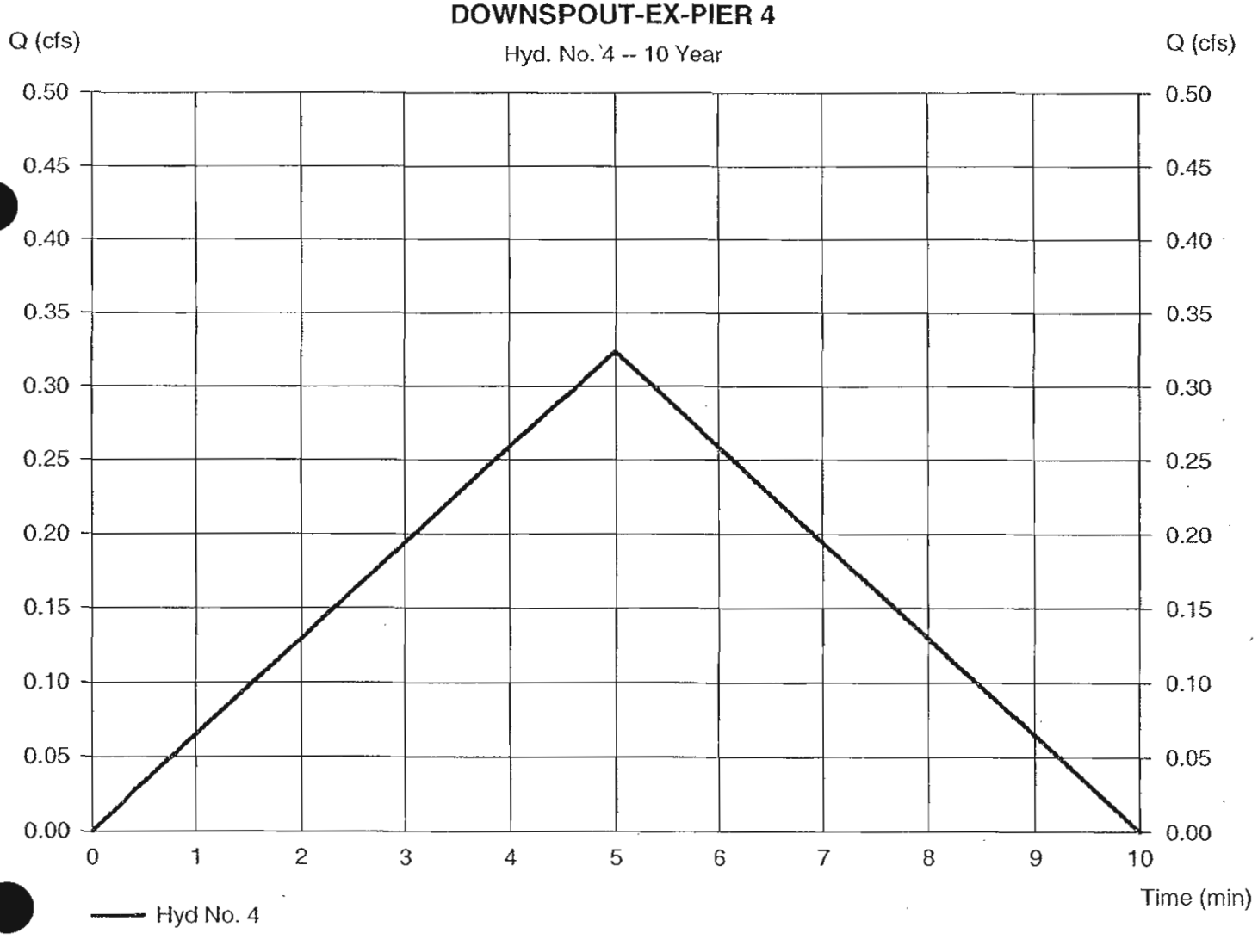

Hydrograph Report

Hydraflow Hydrographs by Intelisolve v9.02 — Wednesday, Dec 9, 2009

Hyd. No. 5

EX-B

Hydrograph type	= Rational	Peak discharge	= 0.404 cfs
Storm frequency	= 10 yrs	Time to peak	= 10 min
Time interval	= 1 min	Hyd. volume	= 242 cuft
Drainage area	= 0.280 ac	Runoff coeff.	= 0.3
Intensity	= 4.805 in/hr	Tc by User	= 10.00 min
IDF Curve	= conndot.idf	Asc/Rec limb fact	= 1/1

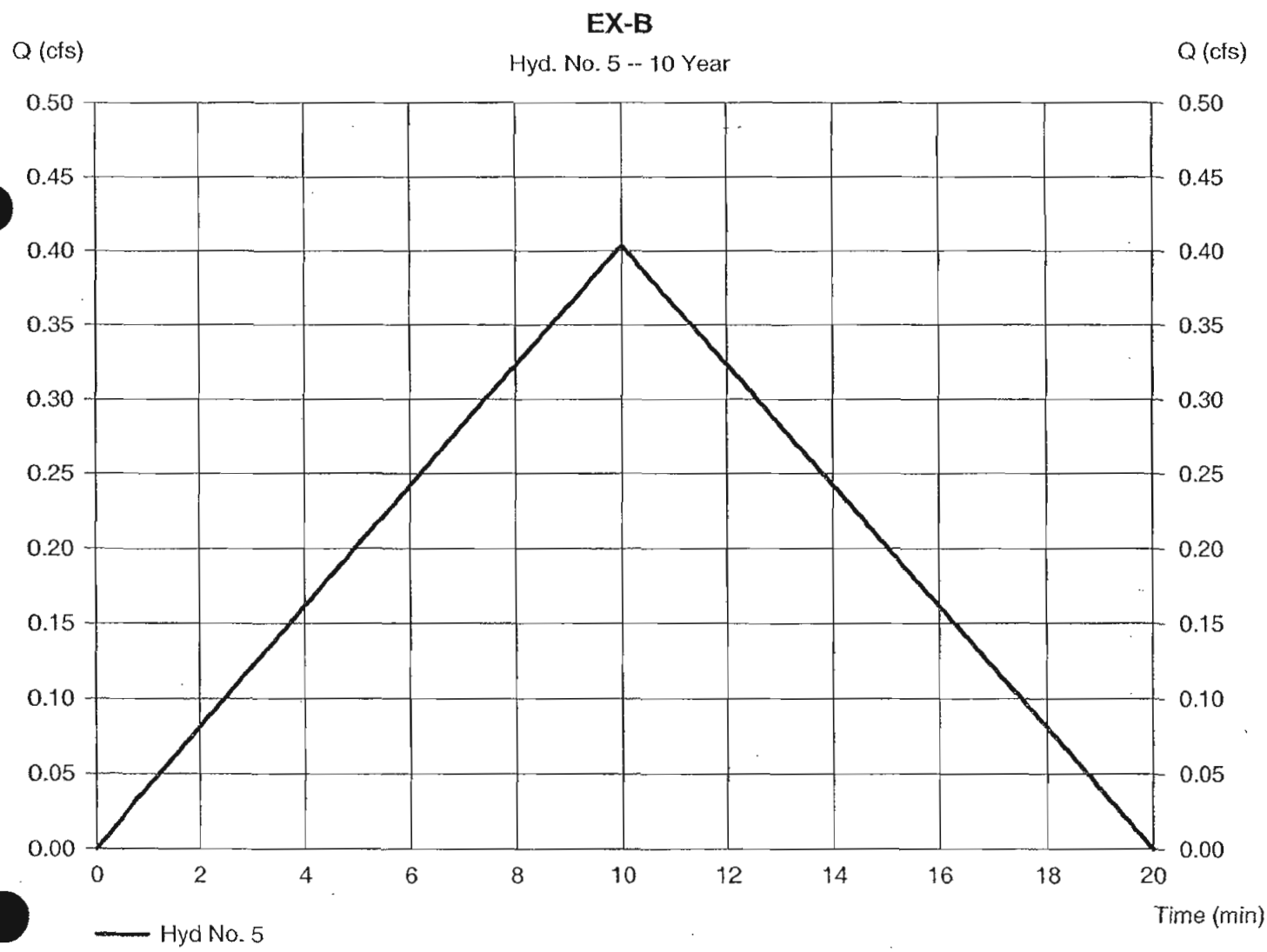

Hydrograph Report

Hydraflow Hydrographs by Intelisolve v9.02 — Wednesday, Dec 9, 2009

Hyd. No. 6

TOTAL EX-B

Hydrograph type	= Combine	Peak discharge	= 0.525 cfs
Storm frequency	= 10 yrs	Time to peak	= 5 min
Time interval	= 1 min	Hyd. volume	= 339 cuft
Inflow hyds.	= 4, 5	Contrib. drain. area	= 0.340 ac

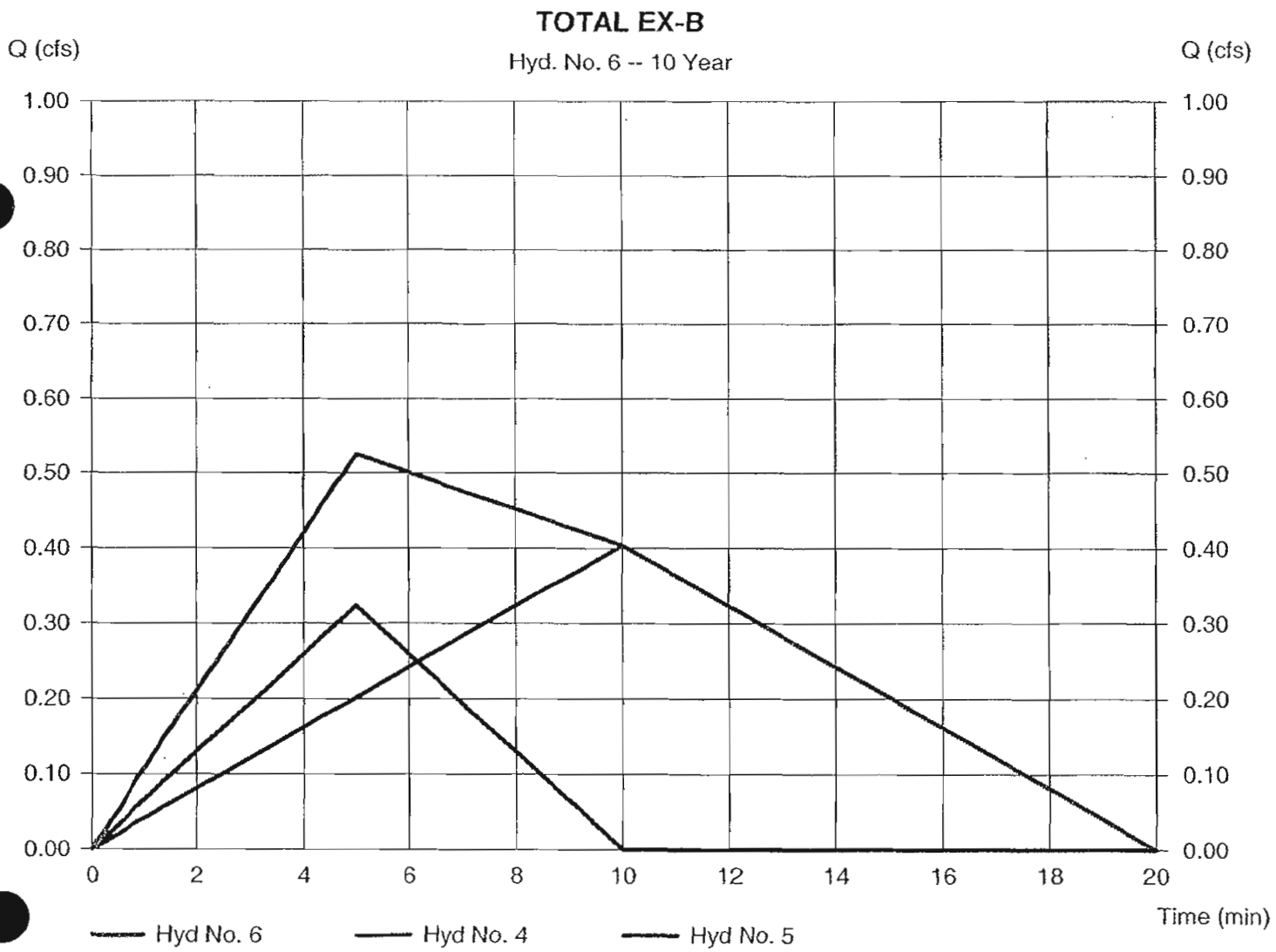

Hydrograph Report

Hydraflow Hydrographs by Intelisolve v9.02 — Wednesday, Dec 9, 2009

Hyd. No. 7

PRO-D

Hydrograph type	= Rational	Peak discharge	= 1.242 cfs
Storm frequency	= 10 yrs	Time to peak	= 10 min
Time interval	= 1 min	Hyd. volume	= 745 cuft
Drainage area	= 0.470 ac	Runoff coeff.	= 0.55
Intensity	= 4.805 in/hr	Tc by User	= 10.00 min
IDF Curve	= conndot.idf	Asc/Rec limb fact	= 1/1

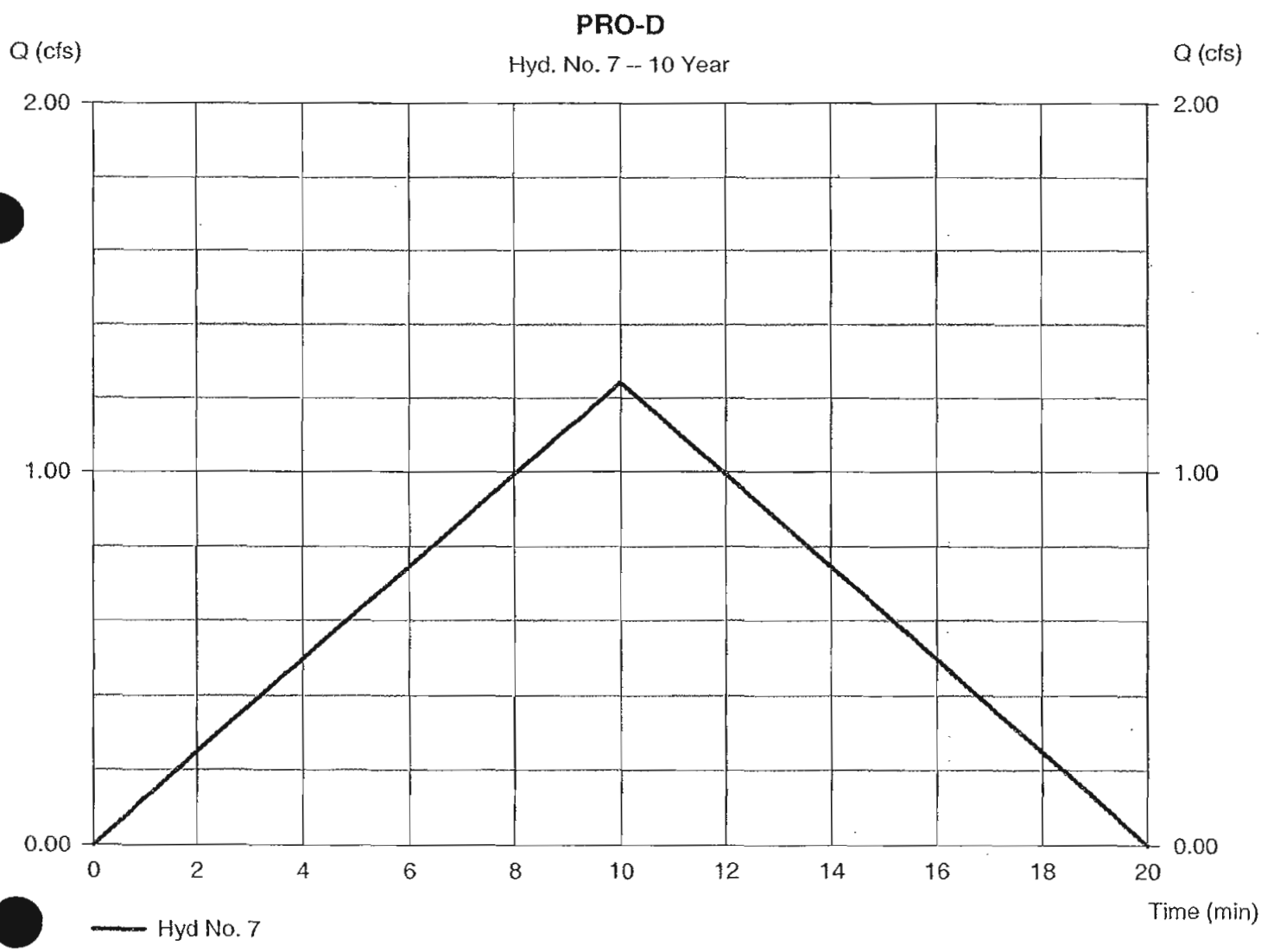

Hydrograph Report

Hydraflow Hydrographs by Intelisolve v9.02 — Wednesday, Dec 9, 2009

Hyd. No. 8

DOWNSPOUT-PRO-PIER3

Hydrograph type	= Rational	Peak discharge	= 0.323 cfs
Storm frequency	= 10 yrs	Time to peak	= 5 min
Time interval	= 1 min	Hyd. volume	= 97 cuft
Drainage area	= 0.060 ac	Runoff coeff.	= 0.9
Intensity	= 5.990 in/hr	Tc by User	= 5.00 min
IDF Curve	= conndot.idf	Asc/Rec limb fact	= 1/1

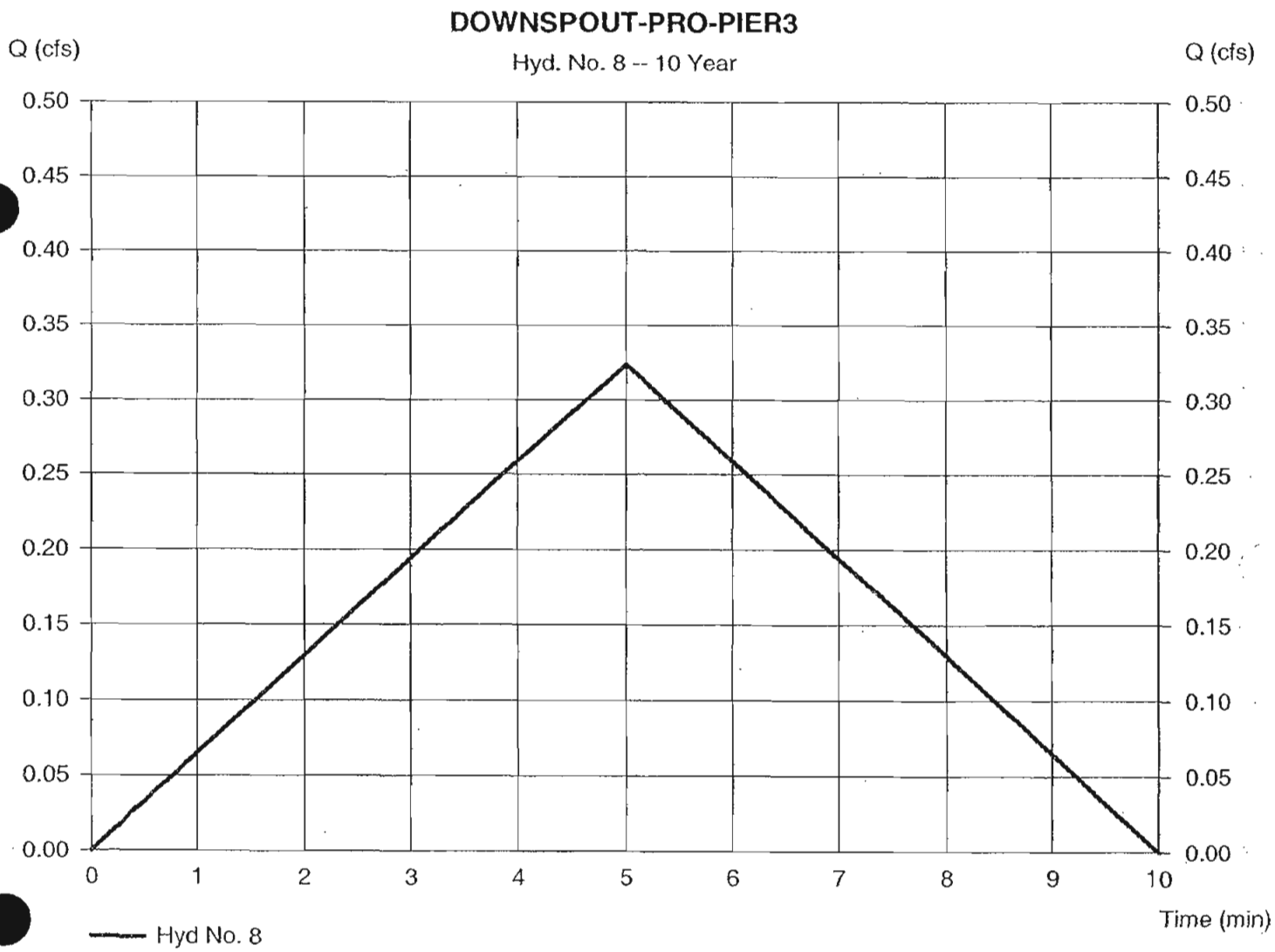

Hydrograph Report

Hydraflow Hydrographs by Intelisolve v9.02 Wednesday, Dec 9, 2009

Hyd. No. 9

TOTAL-PRO-D

Hydrograph type	= Combine	Peak discharge	= 1.242 cfs
Storm frequency	= 10 yrs	Time to peak	= 10 min
Time interval	= 1 min	Hyd. volume	= 842 cuft
Inflow hyds.	= 7, 8	Contrib. drain. area	= 0.530 ac

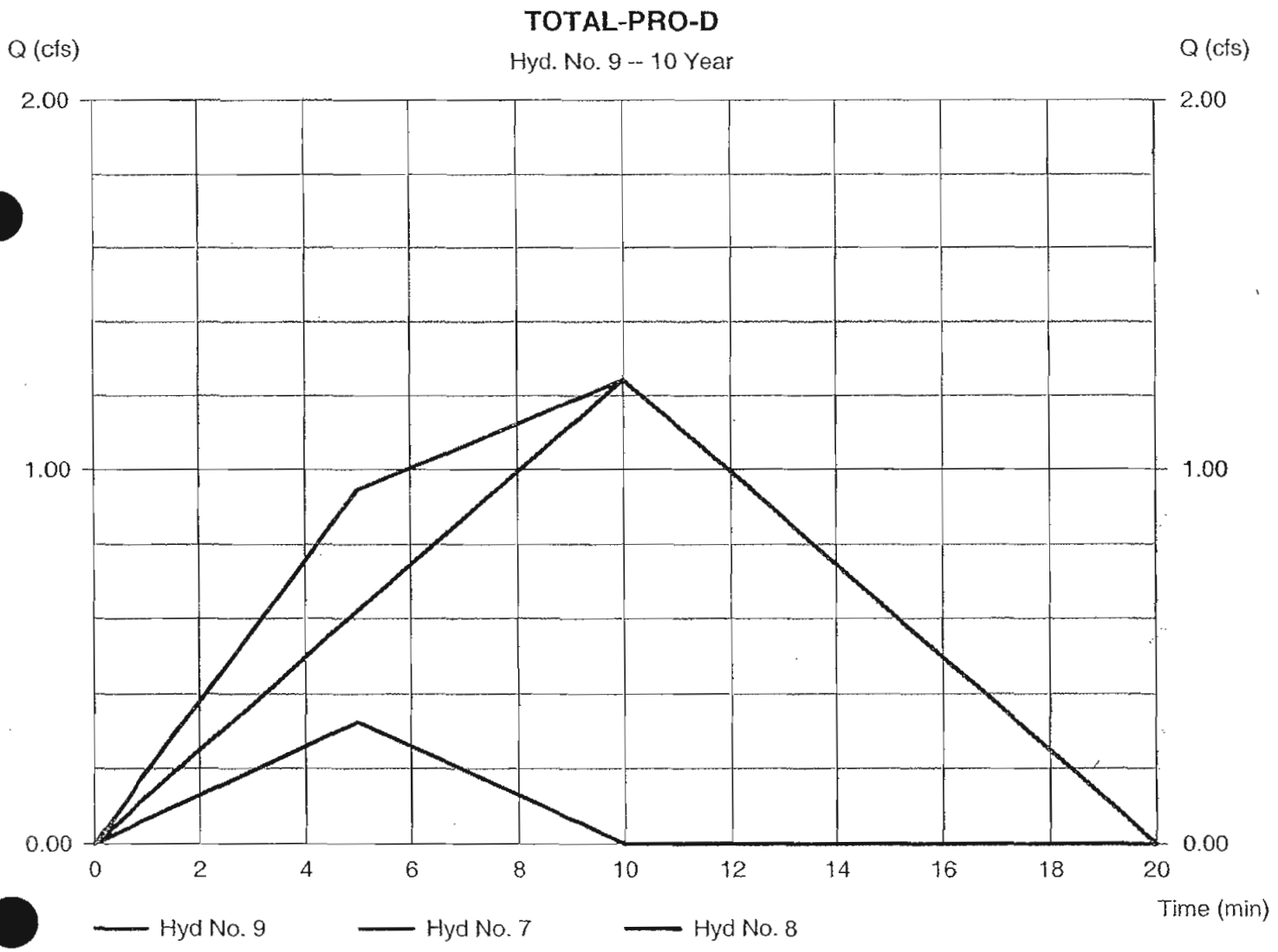

Hydrograph Report

Hydraflow Hydrographs by Intelisolve v9.02 — Wednesday, Dec 9, 2009

Hyd. No. 10

EX-D

Hydrograph type	= Rational	Peak discharge	= 1.427 cfs
Storm frequency	= 10 yrs	Time to peak	= 10 min
Time interval	= 1 min	Hyd. volume	= 856 cuft
Drainage area	= 0.540 ac	Runoff coeff.	= 0.55
Intensity	= 4.805 in/hr	Tc by User	= 10.00 min
IDF Curve	= conndot.idf	Asc/Rec limb fact	= 1/1

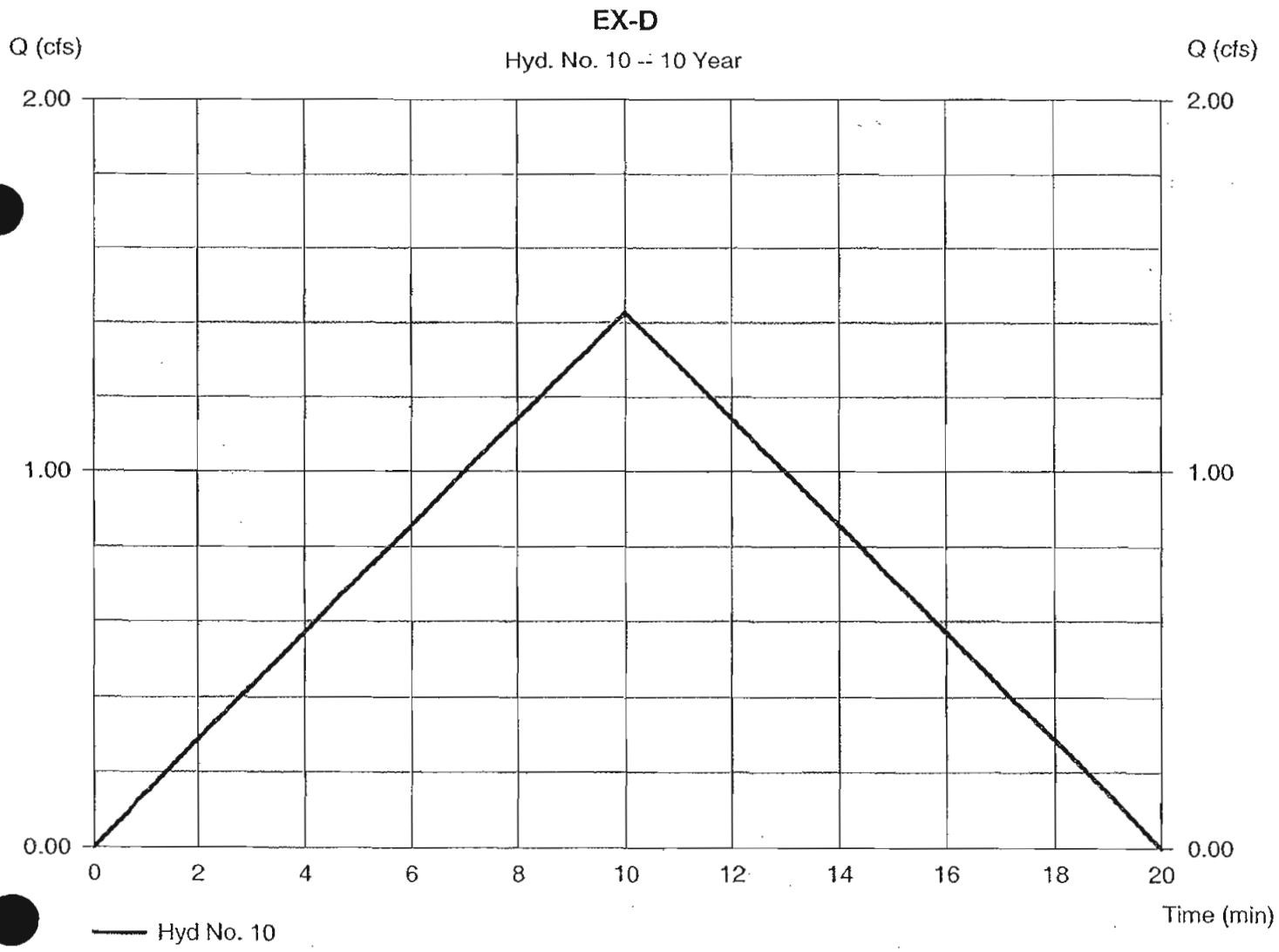

Hydrograph Report

Hydraflow Hydrographs by Intelisolve v9.02 — Wednesday, Dec 9, 2009

Hyd. No. 11

DOWNSPOUT-EX-PIER3

Hydrograph type	= Rational	Peak discharge	= 0.377 cfs
Storm frequency	= 10 yrs	Time to peak	= 5 min
Time interval	= 1 min	Hyd. volume	= 113 cuft
Drainage area	= 0.070 ac	Runoff coeff.	= 0.9
Intensity	= 5.990 in/hr	Tc by User	= 5.00 min
IDF Curve	= conndot.idf	Asc/Rec limb fact	= 1/1

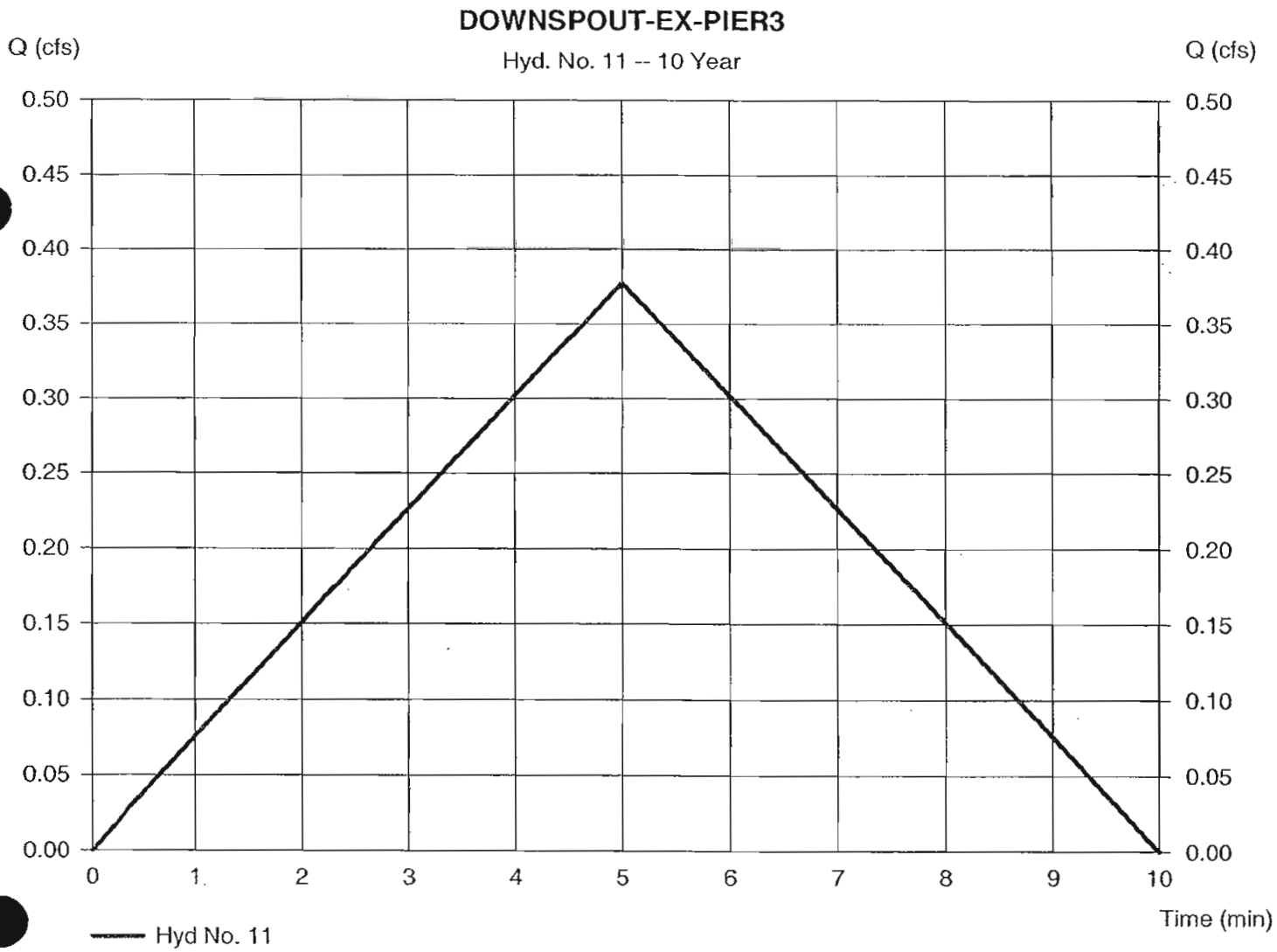

Hydrograph Report

Hydraflow Hydrographs by Intelisolve v9.02 — Wednesday, Dec 9, 2009

Hyd. No. 12

TOTAL-EX-D

Hydrograph type	= Combine	Peak discharge	= 1.427 cfs
Storm frequency	= 10 yrs	Time to peak	= 10 min
Time interval	= 1 min	Hyd. volume	= 969 cuft
Inflow hyds.	= 10, 11	Contrib. drain. area	= 0.610 ac

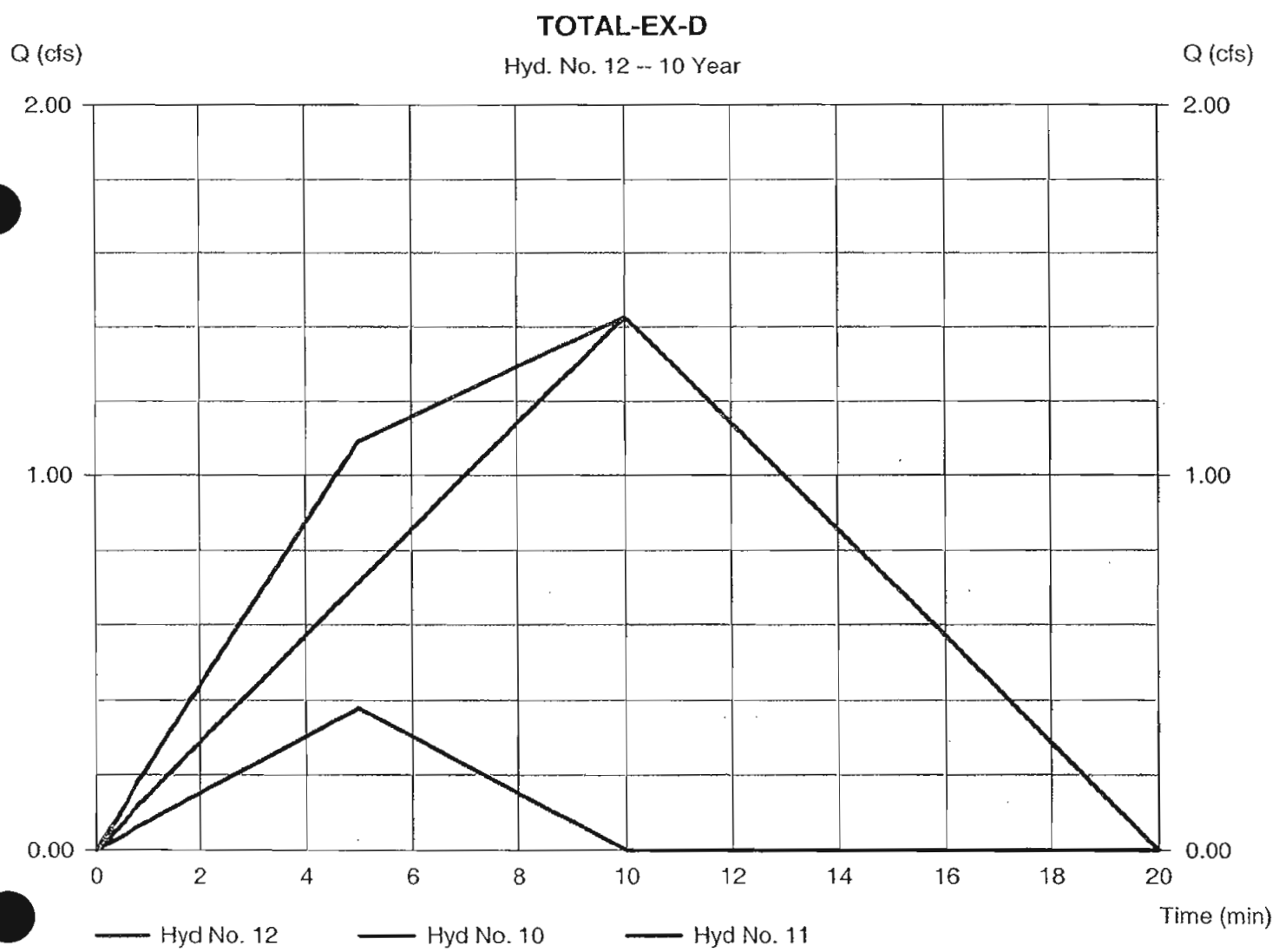

Hydrograph Report

Hydraflow Hydrographs by Intelisolve v9.02 — Wednesday, Dec 9, 2009

Hyd. No. 13

PRO-E

Hydrograph type	= Rational	Peak discharge	= 0.879 cfs
Storm frequency	= 10 yrs	Time to peak	= 10 min
Time interval	= 1 min	Hyd. volume	= 527 cuft
Drainage area	= 0.590 ac	Runoff coeff.	= 0.31
Intensity	= 4.805 in/hr	Tc by User	= 10.00 min
IDF Curve	= conndot.idf	Asc/Rec limb fact	= 1/1

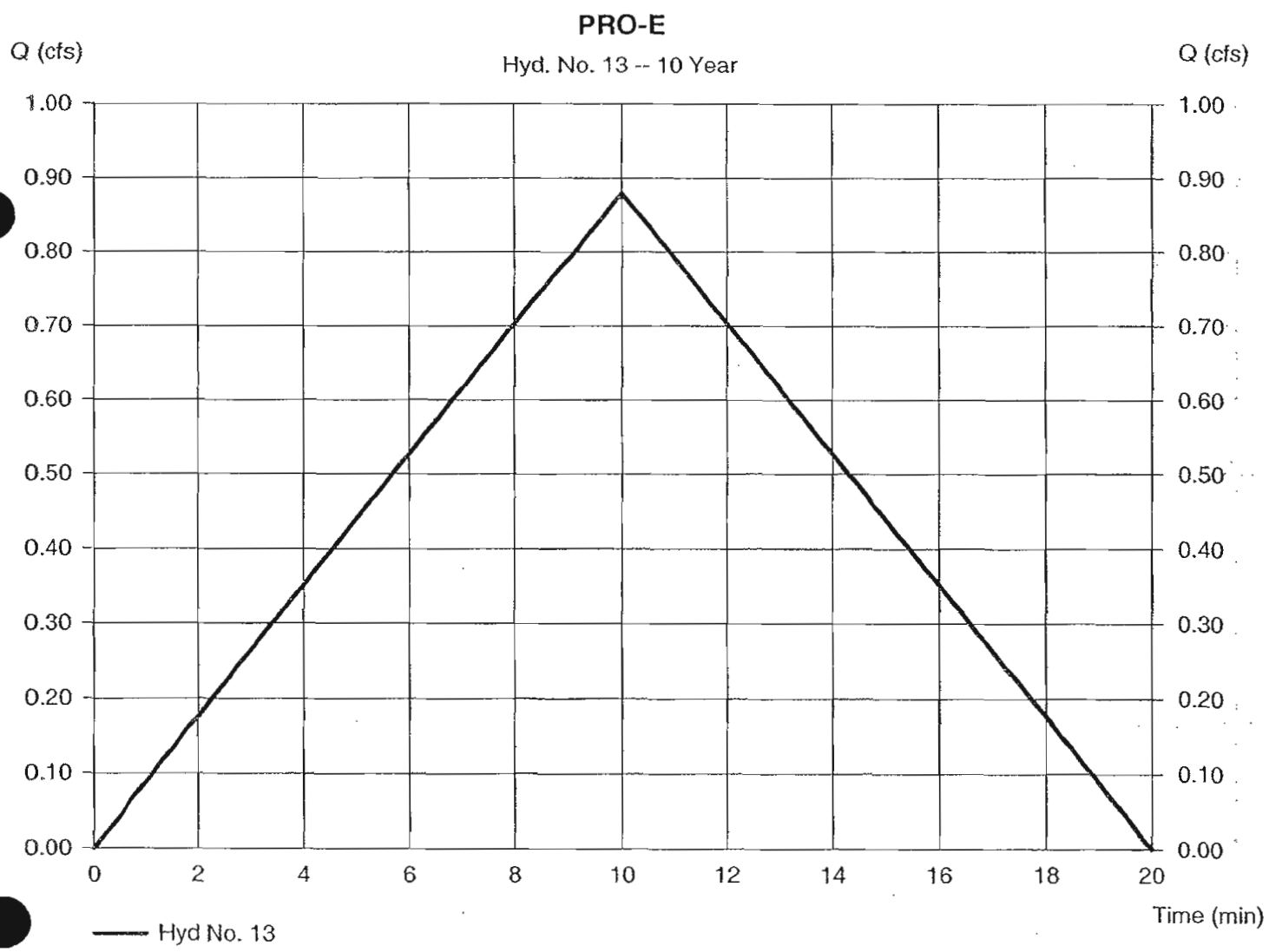

Hydrograph Report

Hydraflow Hydrographs by Intelisolve v9.02 — Wednesday, Dec 9, 2009

Hyd. No. 14

DOWNSPOUT-PRO-PIER 2

Hydrograph type	= Rational	Peak discharge	= 0.755 cfs
Storm frequency	= 10 yrs	Time to peak	= 5 min
Time interval	= 1 min	Hyd. volume	= 226 cuft
Drainage area	= 0.140 ac	Runoff coeff.	= 0.9
Intensity	= 5.990 in/hr	Tc by User	= 5.00 min
IDF Curve	= conndot.idf	Asc/Rec limb fact	= 1/1

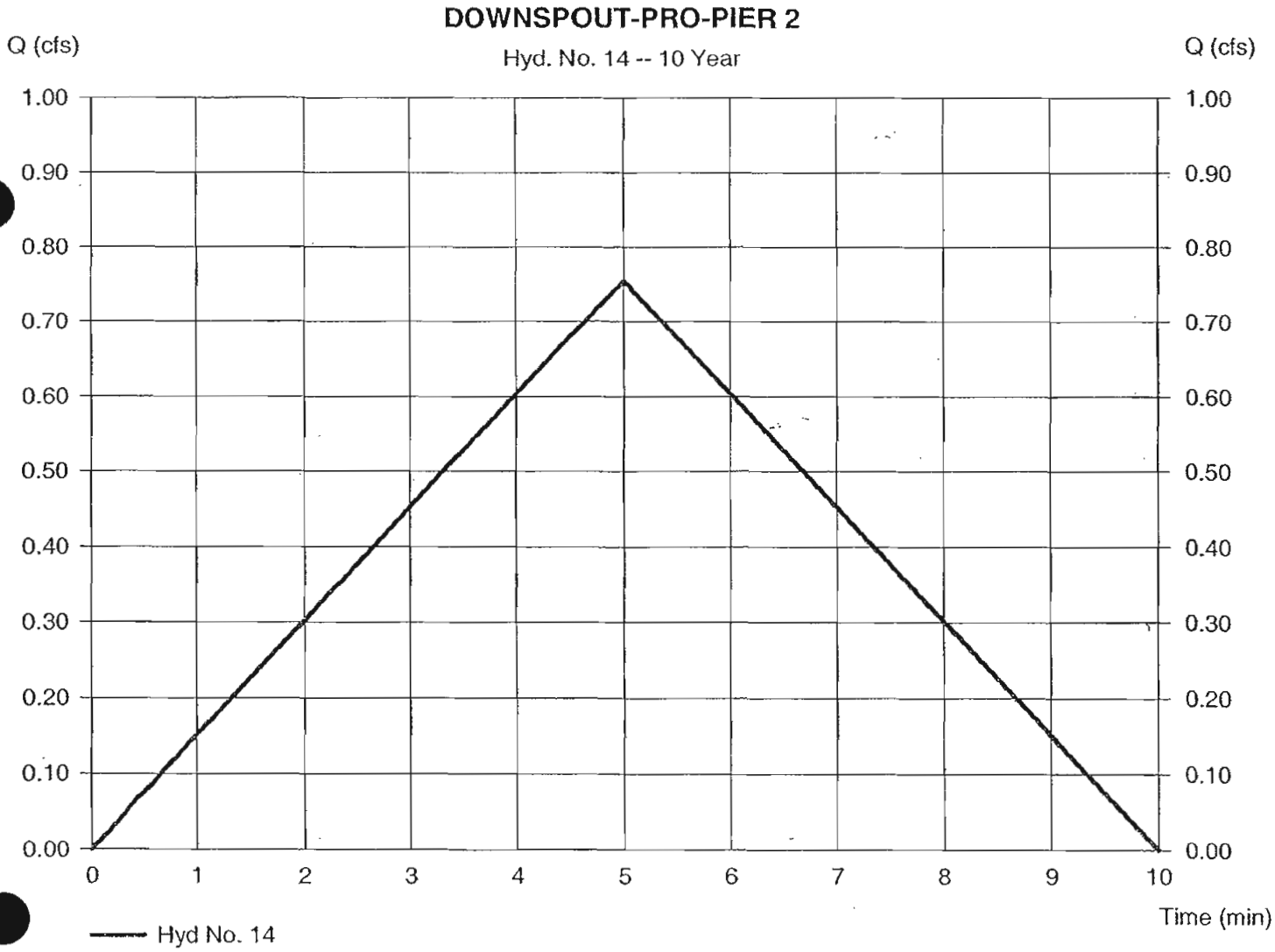

Hydrograph Report

Hydraflow Hydrographs by Intelisolve v9.02 Wednesday, Dec 9, 2009

Hyd. No. 15

TOTAL-PRO-E

Hydrograph type	= Combine	Peak discharge	= 1.194 cfs
Storm frequency	= 10 yrs	Time to peak	= 5 min
Time interval	= 1 min	Hyd. volume	= 754 cuft
Inflow hyds.	= 13, 14	Contrib. drain. area	= 0.730 ac

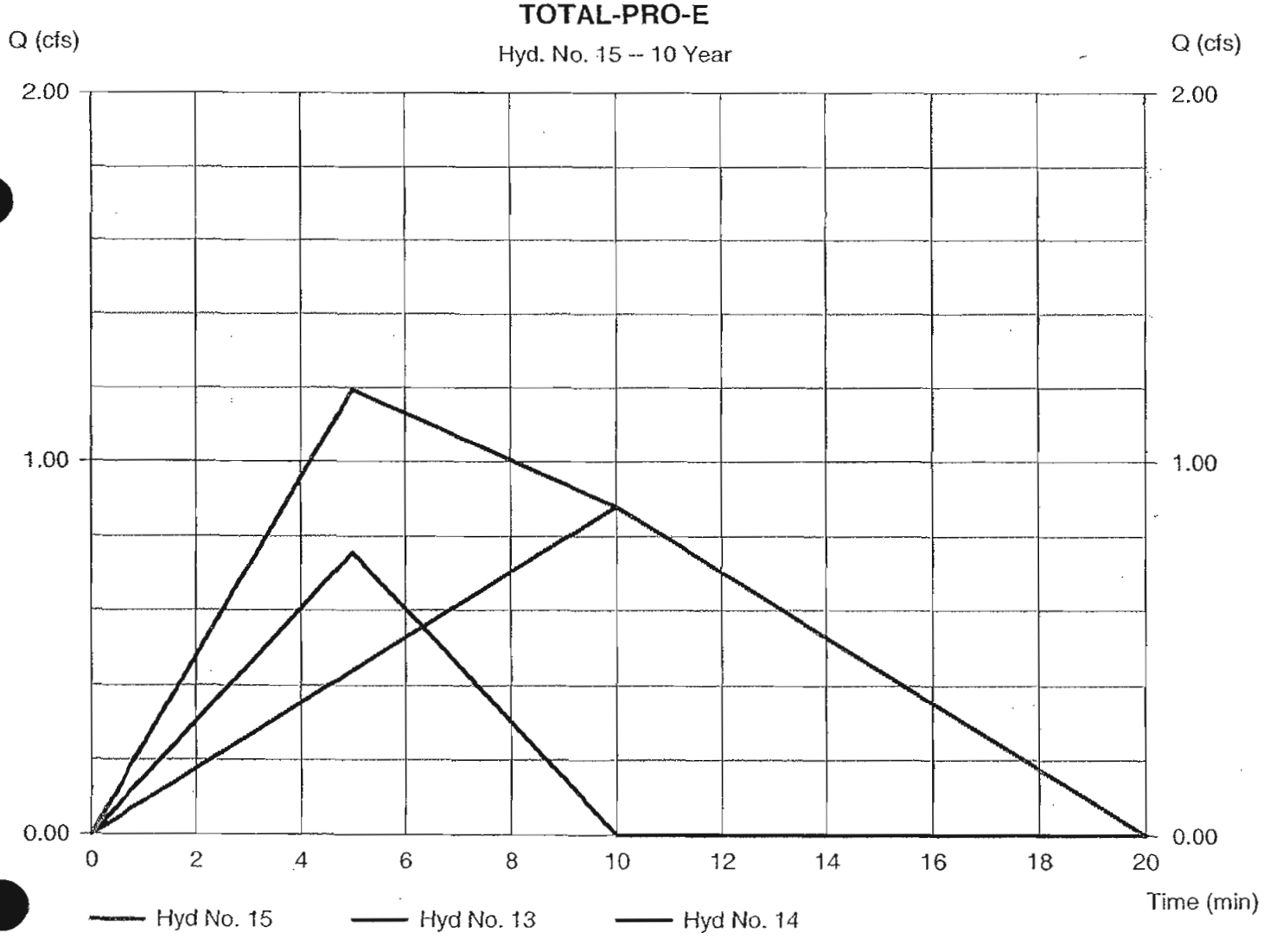

Hydrograph Report

Hydraflow Hydrographs by Intelisolve v9.02 — Wednesday, Dec 9, 2009

Hyd. No. 16

EX-E

Hydrograph type	= Rational	Peak discharge	= 0.938 cfs
Storm frequency	= 10 yrs	Time to peak	= 10 min
Time interval	= 1 min	Hyd. volume	= 563 cuft
Drainage area	= 0.630 ac	Runoff coeff.	= 0.31
Intensity	= 4.805 in/hr	Tc by User	= 10.00 min
IDF Curve	= conndot.idf	Asc/Rec limb fact	= 1/1

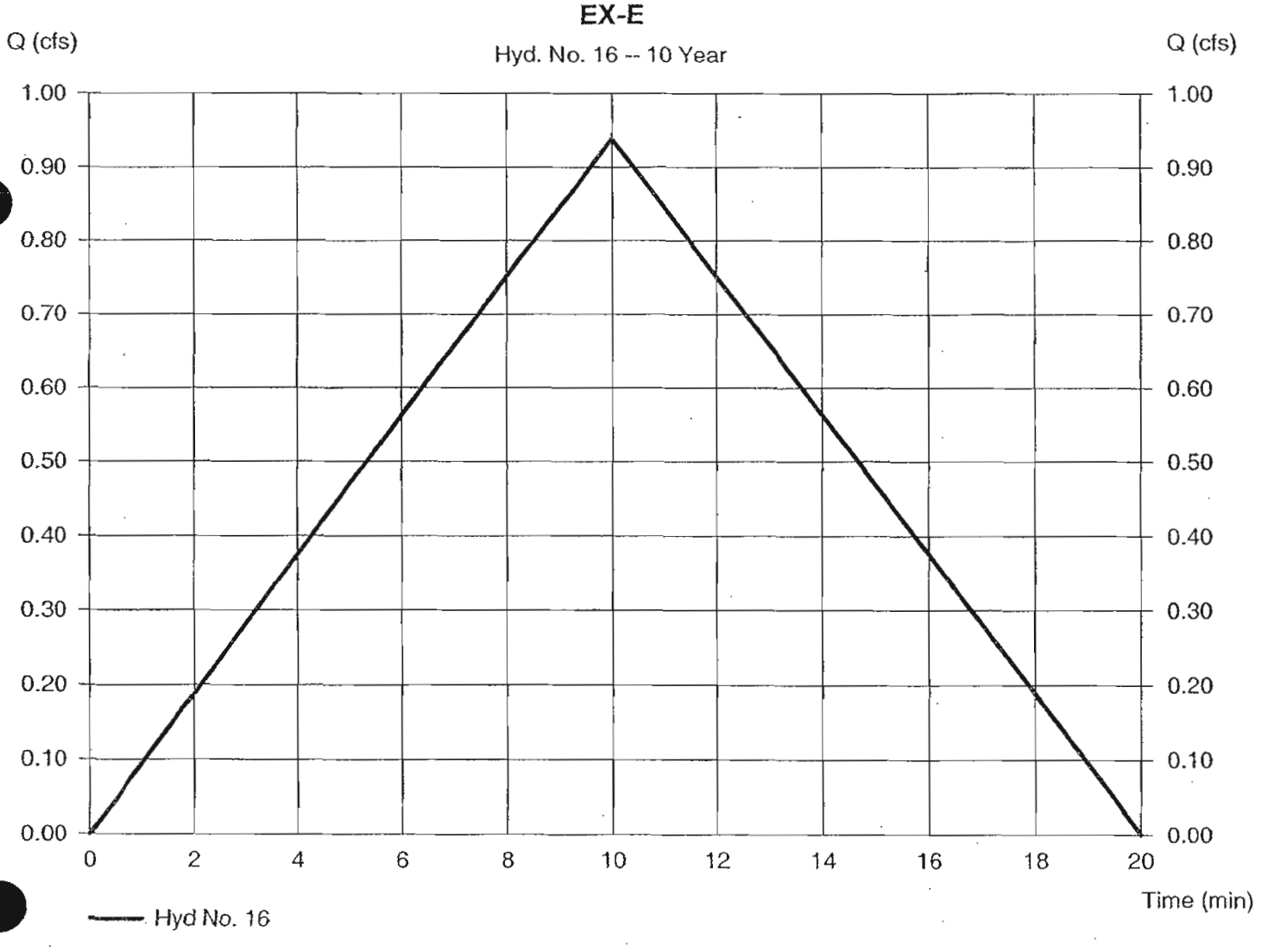

Hydrograph Report

Hydraflow Hydrographs by Intelisolve v9.02 — Wednesday, Dec 9, 2009

Hyd. No. 17

DOWNSPOUT-EX-PIER 2

Hydrograph type	= Rational	Peak discharge	= 0.377 cfs
Storm frequency	= 10 yrs	Time to peak	= 5 min
Time interval	= 1 min	Hyd. volume	= 113 cuft
Drainage area	= 0.070 ac	Runoff coeff.	= 0.9
Intensity	= 5.990 in/hr	Tc by User	= 5.00 min
IDF Curve	= conndot.idf	Asc/Rec limb fact	= 1/1

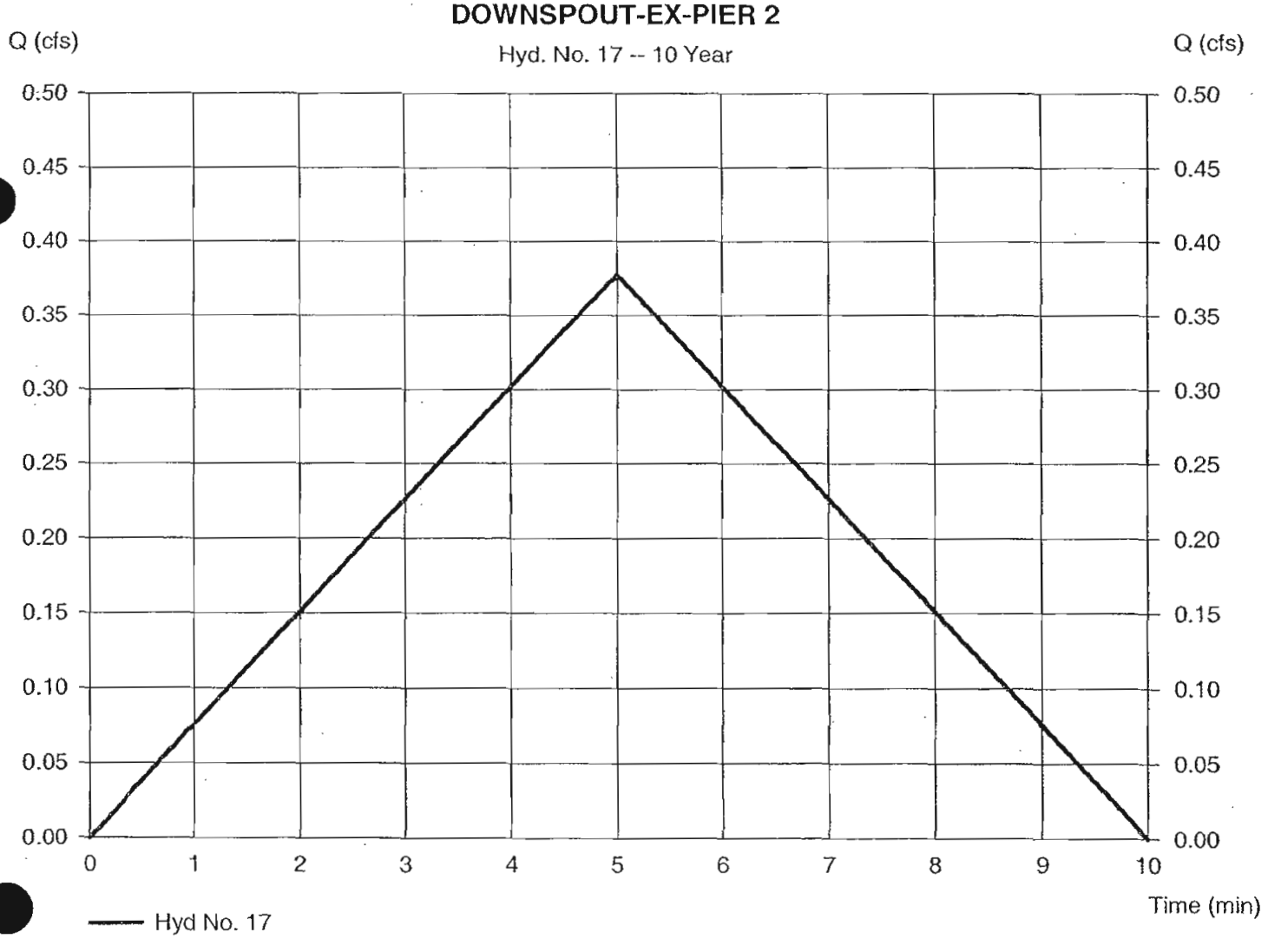

Hydrograph Report

Hydraflow Hydrographs by Intelisolve v9.02 Wednesday, Dec 9, 2009

Hyd. No. 18

TOTAL-EX-E

Hydrograph type	= Combine	Peak discharge	= 0.938 cfs
Storm frequency	= 10 yrs	Time to peak	= 10 min
Time interval	= 1 min	Hyd. volume	= 676 cuft
Inflow hyds.	= 16, 17	Contrib. drain. area	= 0.700 ac

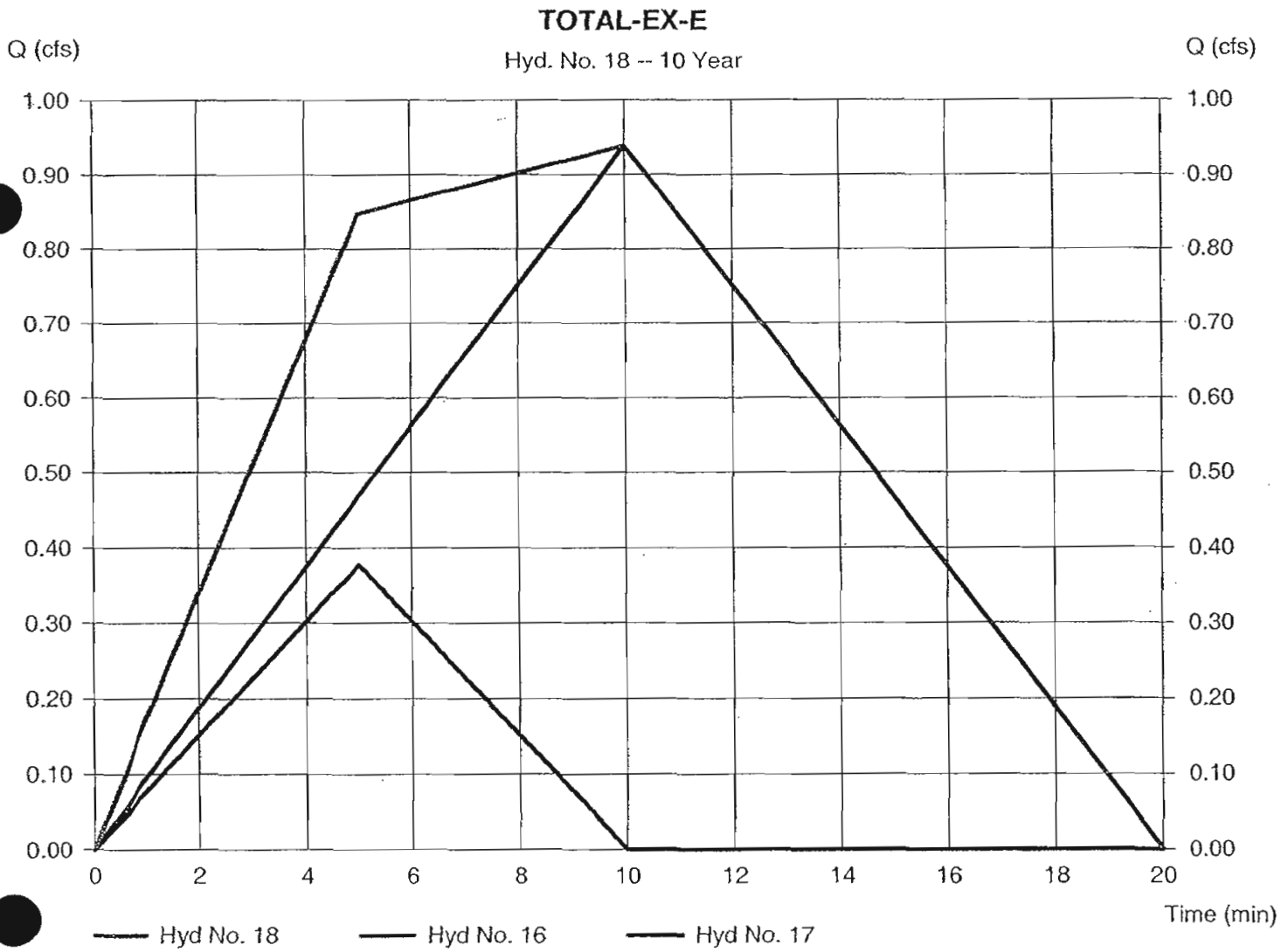

Hydrograph Report

Hydraflow Hydrographs by Intelisolve v9.02 — Wednesday, Dec 9, 2009

Hyd. No. 19

PRO-G

Hydrograph type	= Rational	Peak discharge	= 0.428 cfs
Storm frequency	= 10 yrs	Time to peak	= 10 min
Time interval	= 1 min	Hyd. volume	= 257 cuft
Drainage area	= 0.270 ac	Runoff coeff.	= 0.33
Intensity	= 4.805 in/hr	Tc by User	= 10.00 min
IDF Curve	= conndot.idf	Asc/Rec limb fact	= 1/1

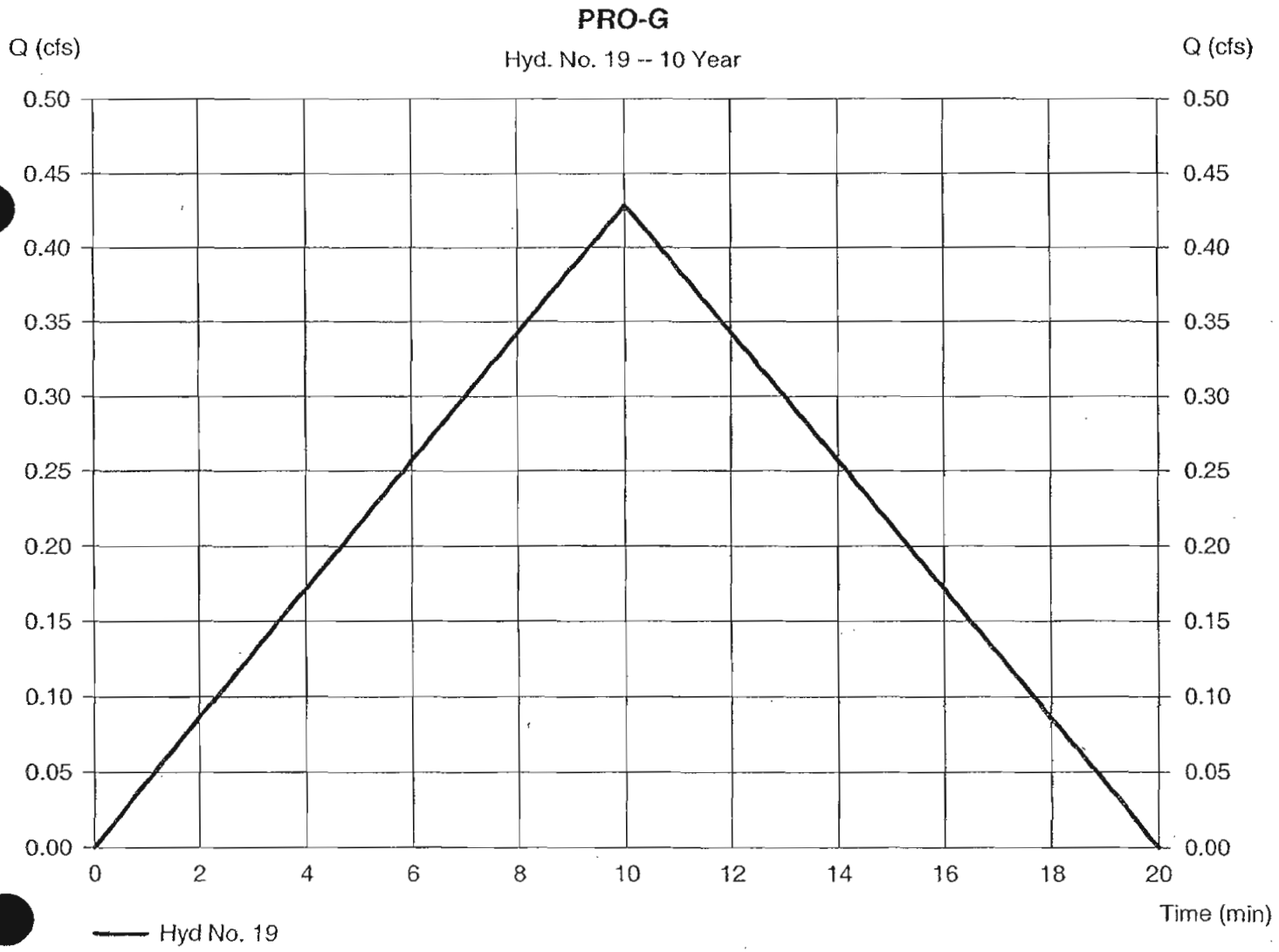

Hydrograph Report

Hydraflow Hydrographs by Intelisolve v9.02 — Wednesday, Dec 9, 2009

Hyd. No. 20

DOWNSPOUT-PRO-PIER 1

Hydrograph type	= Rational	Peak discharge	= 0.755 cfs
Storm frequency	= 10 yrs	Time to peak	= 5 min
Time interval	= 1 min	Hyd. volume	= 226 cuft
Drainage area	= 0.140 ac	Runoff coeff.	= 0.9
Intensity	= 5.990 in/hr	Tc by User	= 5.00 min
IDF Curve	= conndot.idf	Asc/Rec limb fact	= 1/1

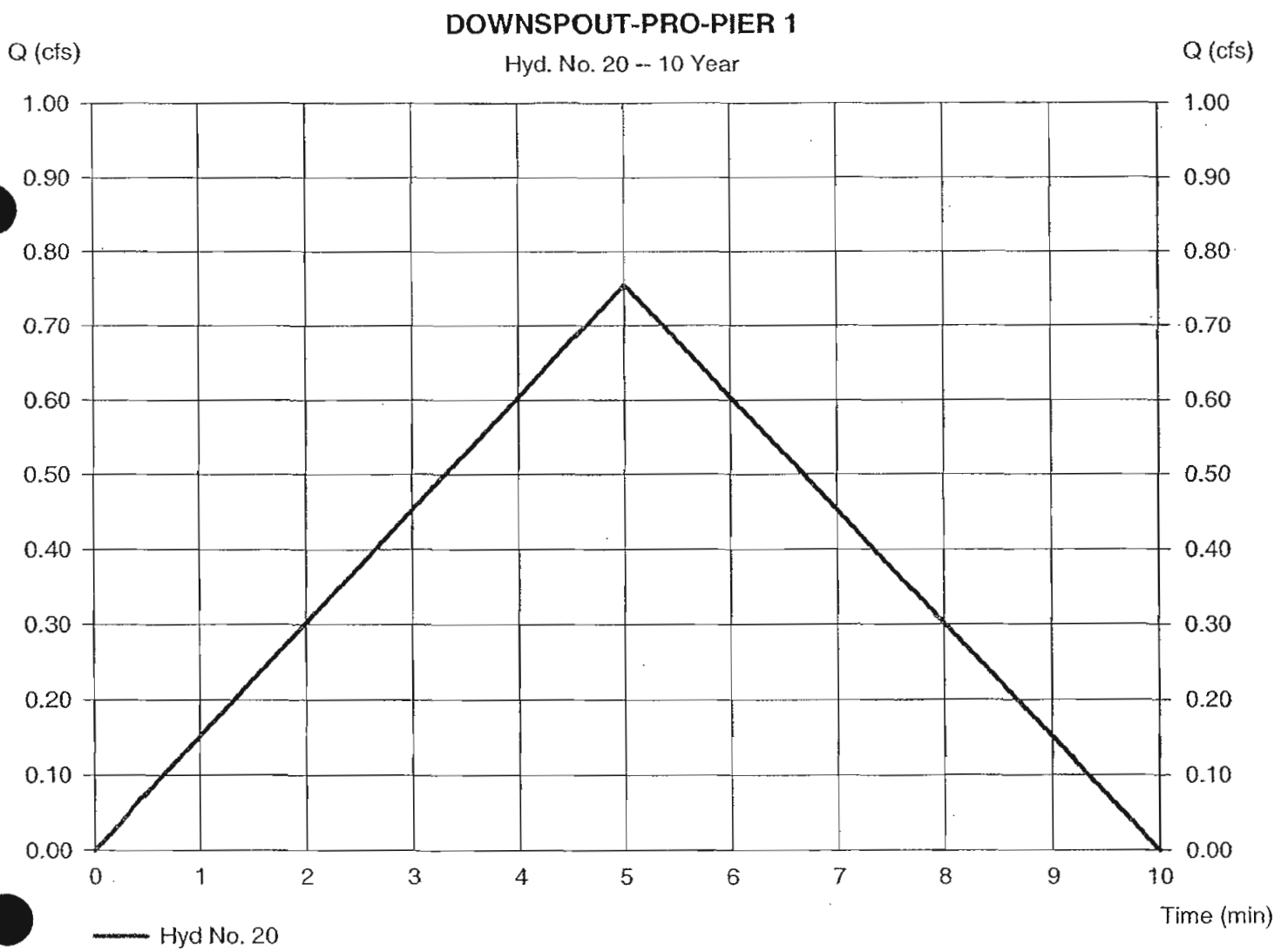

Hydrograph Report

Hydraflow Hydrographs by Intelisolve v9.02 — Wednesday, Dec 9, 2009

Hyd. No. 21

TOTAL-PRO-G

Hydrograph type	= Combine	Peak discharge	= 0.969 cfs
Storm frequency	= 10 yrs	Time to peak	= 5 min
Time interval	= 1 min	Hyd. volume	= 483 cuft
Inflow hyds.	= 19, 20	Contrib. drain. area	= 0.410 ac

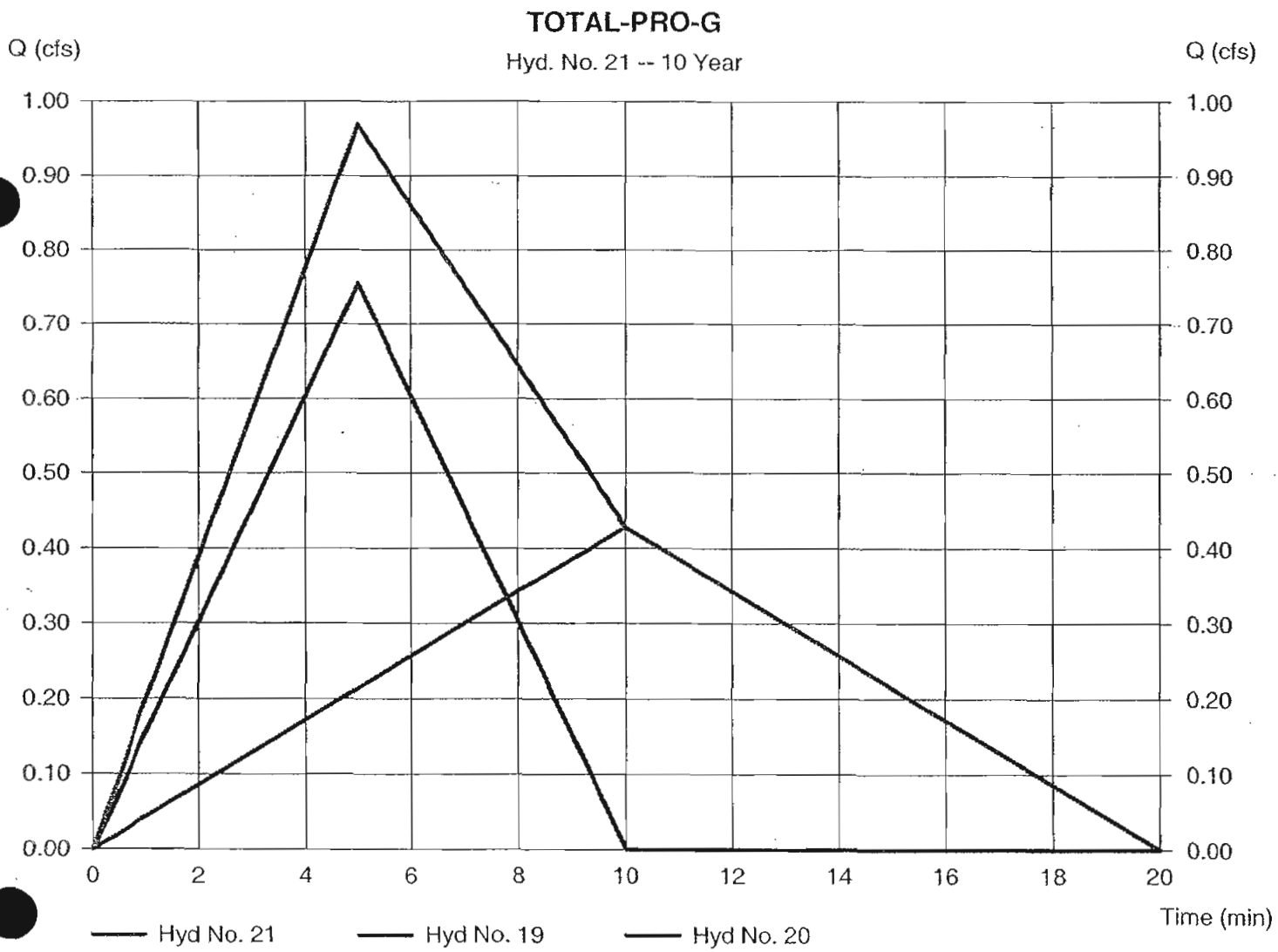

Hydrograph Report

Hydraflow Hydrographs by Intelisolve v9.02 | Wednesday, Dec 9, 2009

Hyd. No. 22

DOWNSPOUT-EX-PIER1

Hydrograph type	= Rational	Peak discharge	= 0.431 cfs
Storm frequency	= 10 yrs	Time to peak	= 5 min
Time interval	= 1 min	Hyd. volume	= 129 cuft
Drainage area	= 0.080 ac	Runoff coeff.	= 0.9
Intensity	= 5.990 in/hr	Tc by User	= 5.00 min
IDF Curve	= conndot.idf	Asc/Rec limb fact	= 1/1

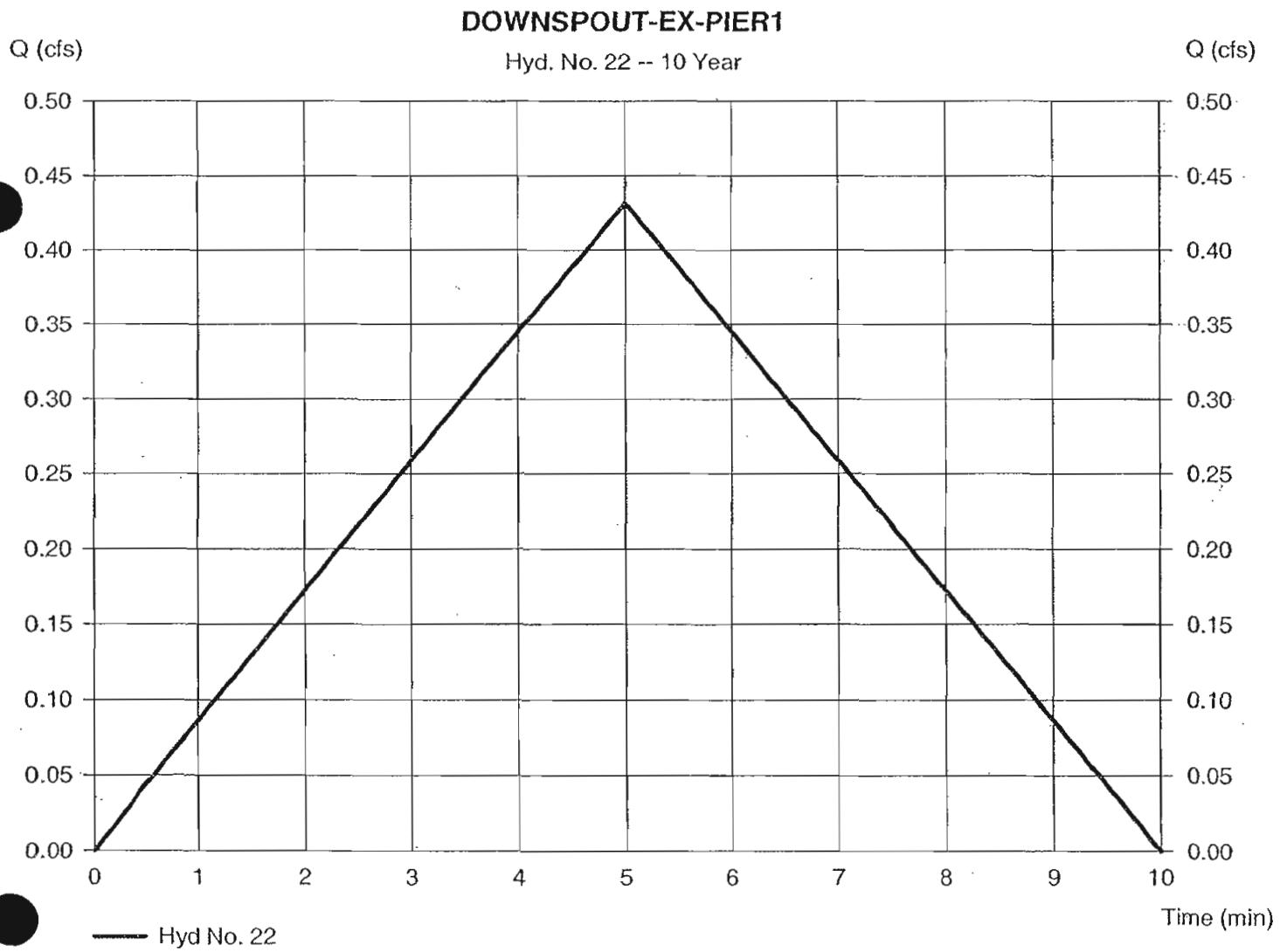

Hydrograph Report

Hydraflow Hydrographs by Intelisolve v9.02 — Wednesday, Dec 9, 2009

Hyd. No. 23

EX-G

Hydrograph type	= Rational	Peak discharge	= 0.428 cfs
Storm frequency	= 10 yrs	Time to peak	= 10 min
Time interval	= 1 min	Hyd. volume	= 257 cuft
Drainage area	= 0.270 ac	Runoff coeff.	= 0.33
Intensity	= 4.805 in/hr	Tc by User	= 10.00 min
IDF Curve	= conndot.idf	Asc/Rec limb fact	= 1/1

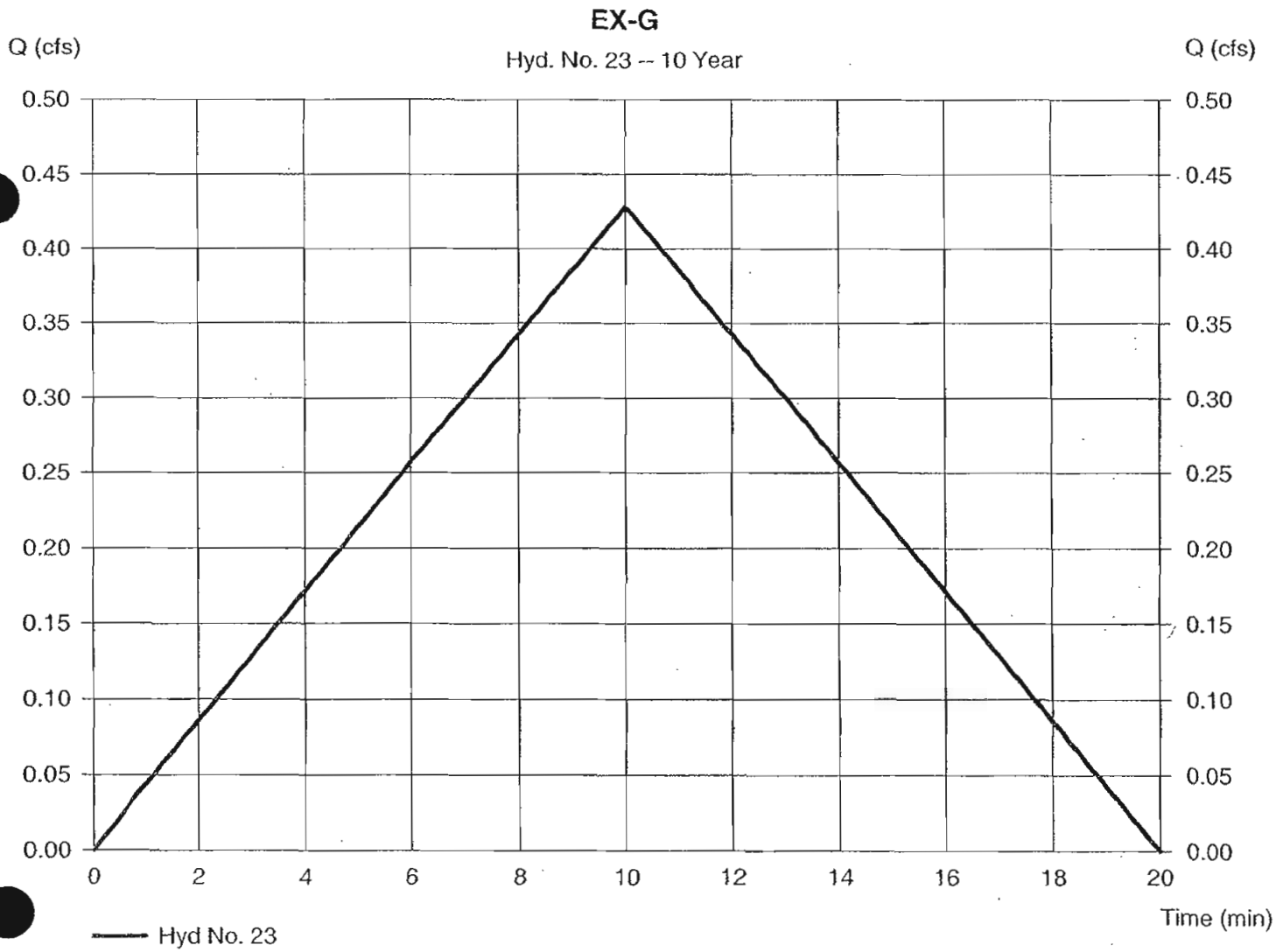

Hydrograph Report

Hydraflow Hydrographs by Intelisolve v9.02 — Wednesday, Dec 9, 2009

Hyd. No. 24

TOTAL-EX-G

Hydrograph type	= Combine	Peak discharge	= 0.645 cfs
Storm frequency	= 10 yrs	Time to peak	= 5 min
Time interval	= 1 min	Hyd. volume	= 386 cuft
Inflow hyds.	= 22, 23	Contrib. drain. area	= 0.350 ac

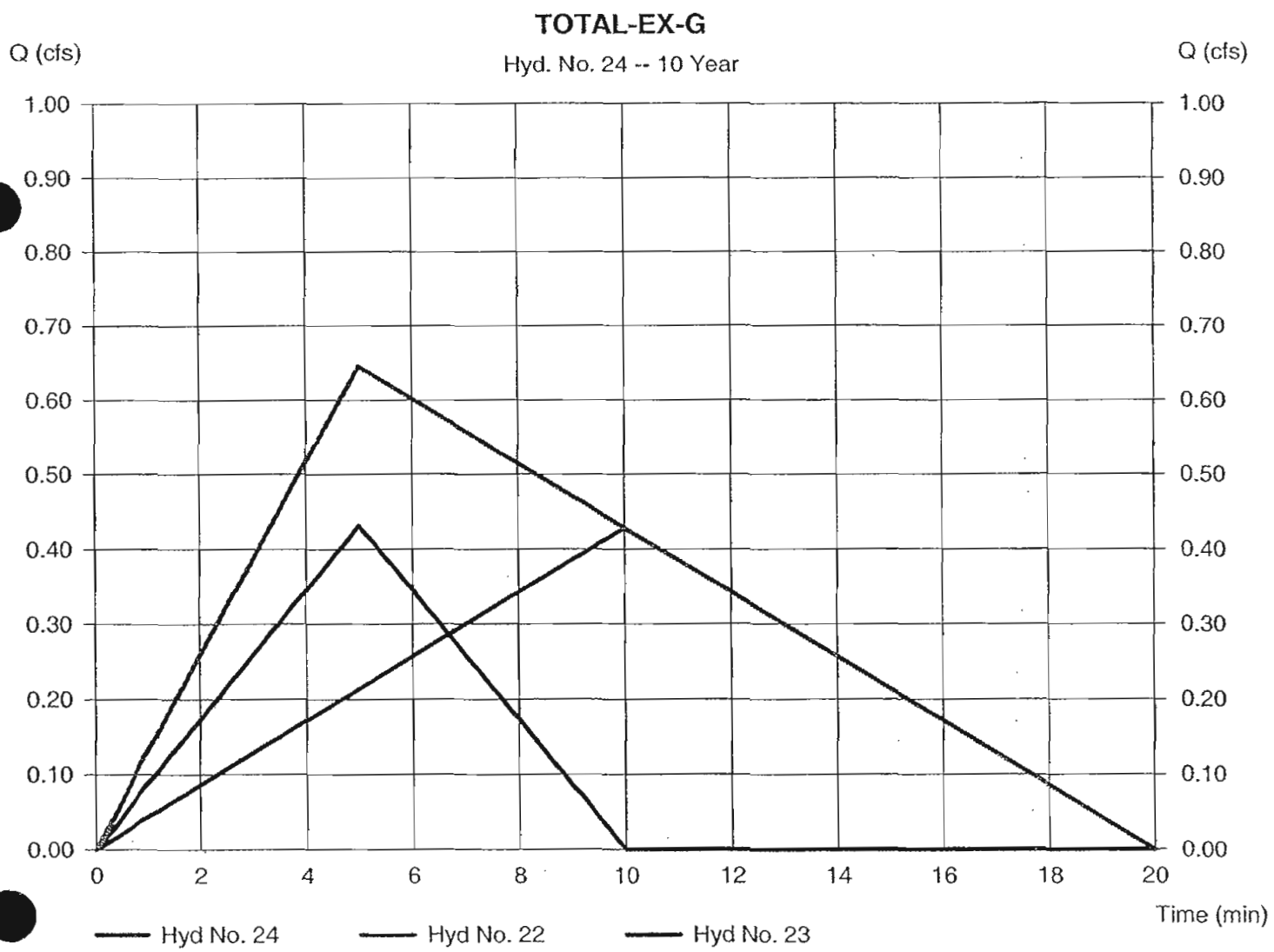

Hydrograph Report

Hydraflow Hydrographs by Intelisolve v9.02 Wednesday, Dec 9, 2009

Hyd. No. 25

PRO-L

Hydrograph type	= Rational	Peak discharge	= 1.495 cfs
Storm frequency	= 10 yrs	Time to peak	= 10 min
Time interval	= 1 min	Hyd. volume	= 897 cuft
Drainage area	= 0.610 ac	Runoff coeff.	= 0.51
Intensity	= 4.805 in/hr	Tc by User	= 10.00 min
IDF Curve	= conndot.idf	Asc/Rec limb fact	= 1/1

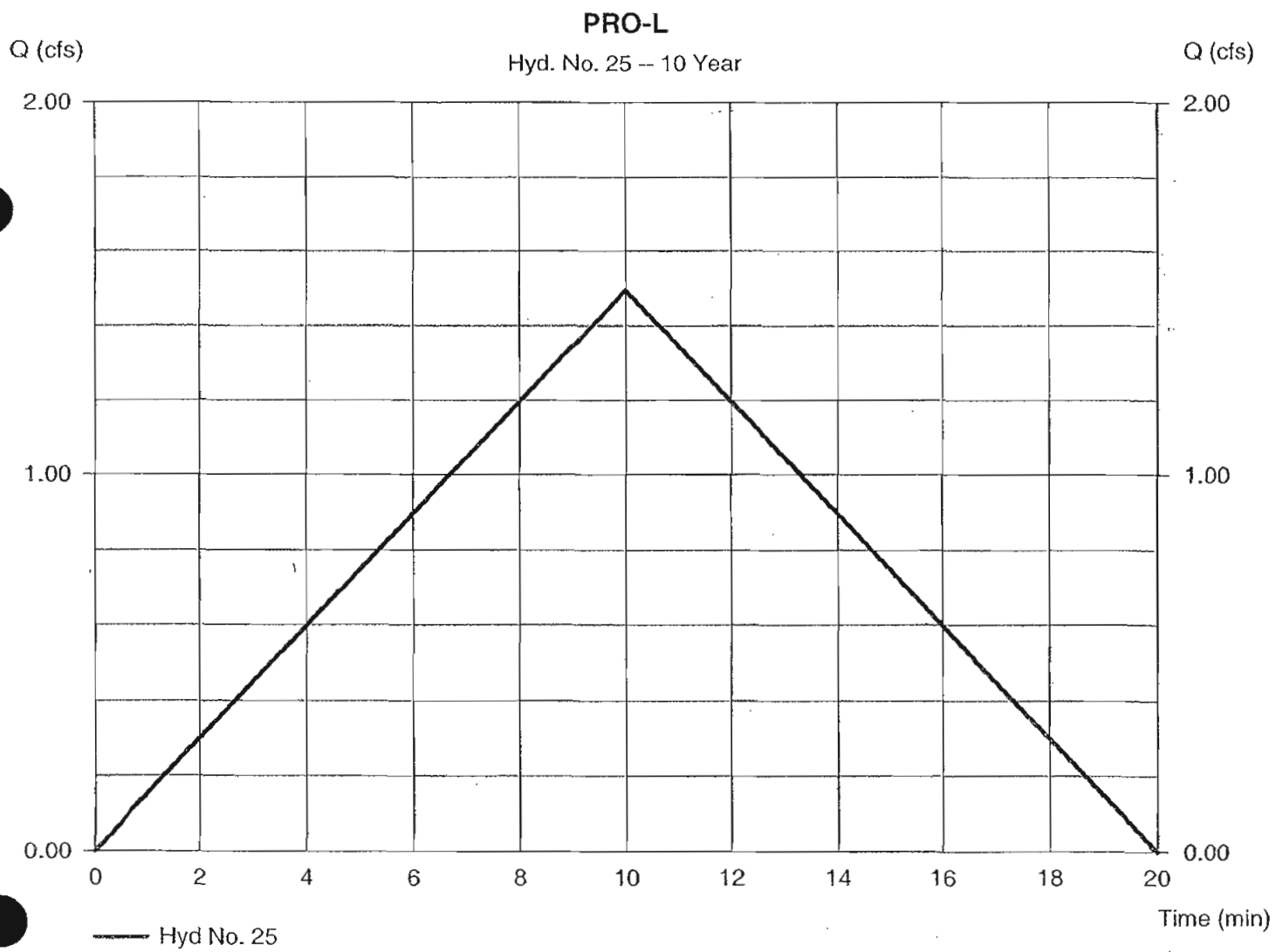

Hydrograph Report

Hydraflow Hydrographs by Intelisolve v9.02 — Wednesday, Dec 9, 2009

Hyd. No. 26

DOWNSPOUT-PRO-ABUT 1

Hydrograph type	= Rational	Peak discharge	= 0.809 cfs
Storm frequency	= 10 yrs	Time to peak	= 5 min
Time interval	= 1 min	Hyd. volume	= 243 cuft
Drainage area	= 0.150 ac	Runoff coeff.	= 0.9
Intensity	= 5.990 in/hr	Tc by User	= 5.00 min
IDF Curve	= conndot.idf	Asc/Rec limb fact	= 1/1

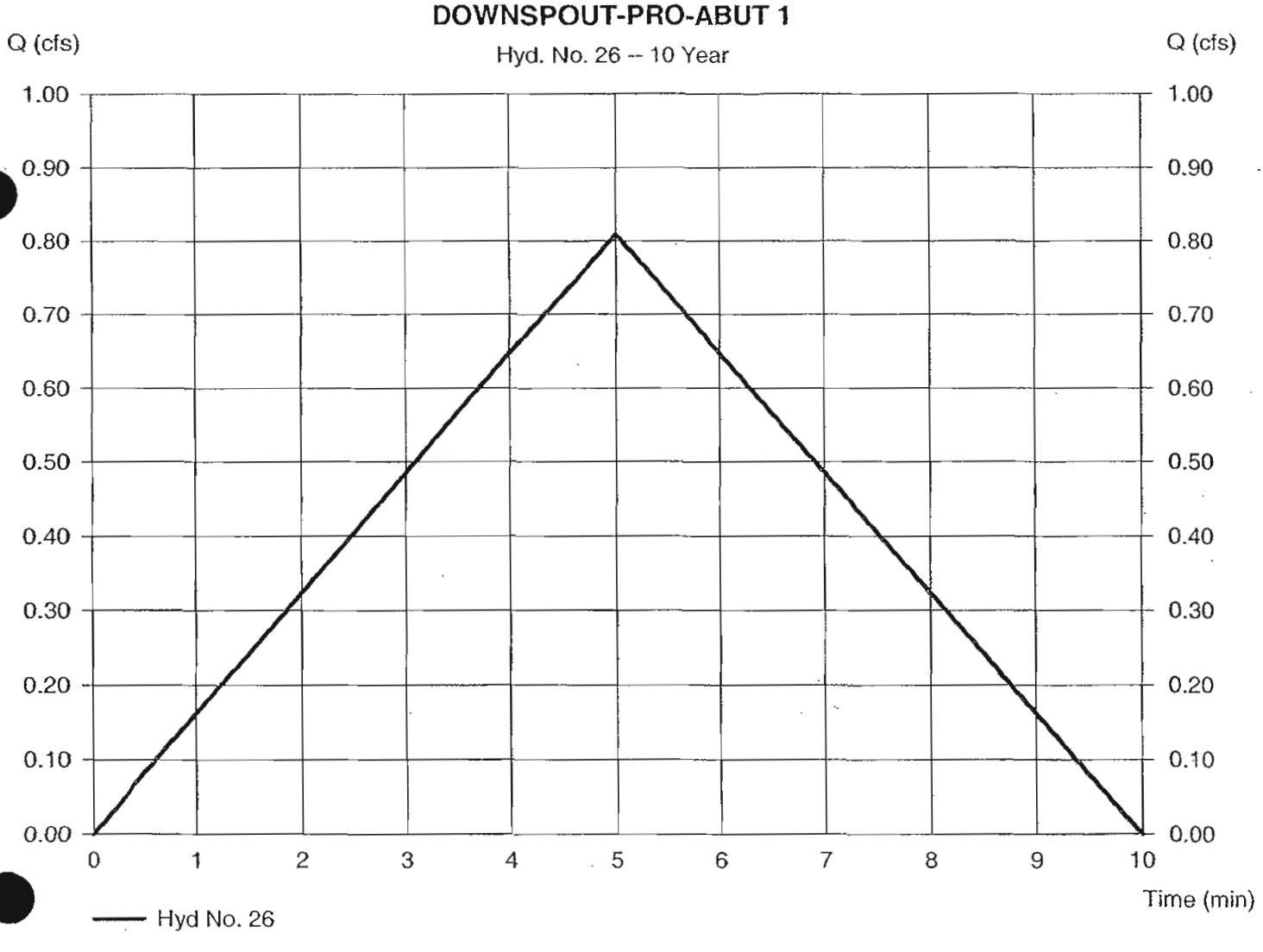

Hydrograph Report

Hydraflow Hydrographs by Intelisolve v9.02 Wednesday, Dec 9, 2009

Hyd. No. 27

TOTAL-PRO-L

Hydrograph type	= Combine	Peak discharge	= 1.556 cfs
Storm frequency	= 10 yrs	Time to peak	= 5 min
Time interval	= 1 min	Hyd. volume	= 1,140 cuft
Inflow hyds.	= 25, 26	Contrib. drain. area	= 0.760 ac

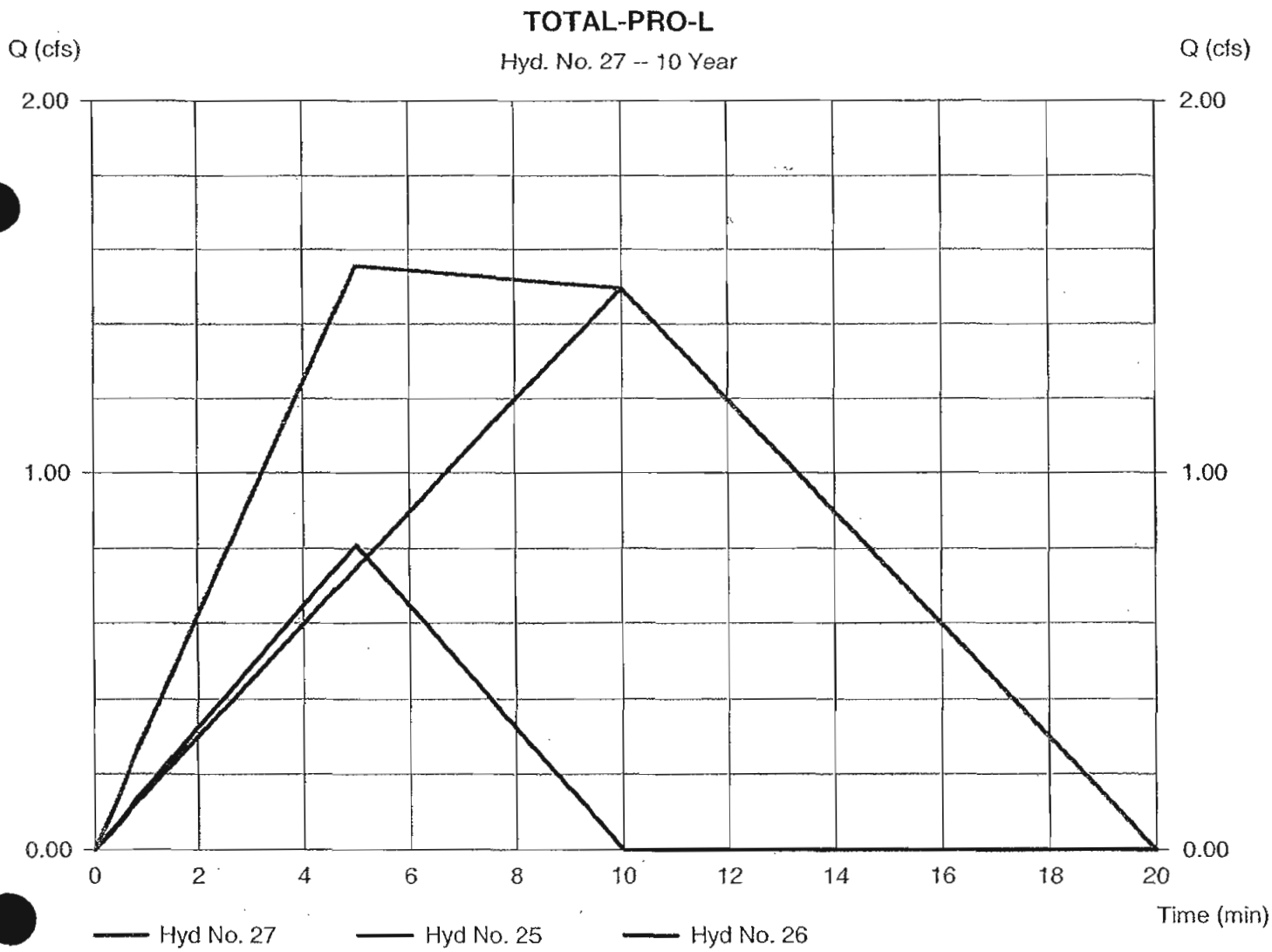

Hydrograph Report

Hydraflow Hydrographs by Intelisolve v9.02 — Wednesday, Dec 9, 2009

Hyd. No. 28

EX-L

Hydrograph type	= Rational	Peak discharge	= 1.544 cfs
Storm frequency	= 10 yrs	Time to peak	= 10 min
Time interval	= 1 min	Hyd. volume	= 926 cuft
Drainage area	= 0.630 ac	Runoff coeff.	= 0.51
Intensity	= 4.805 in/hr	Tc by User	= 10.00 min
IDF Curve	= conndot.idf	Asc/Rec limb fact	= 1/1

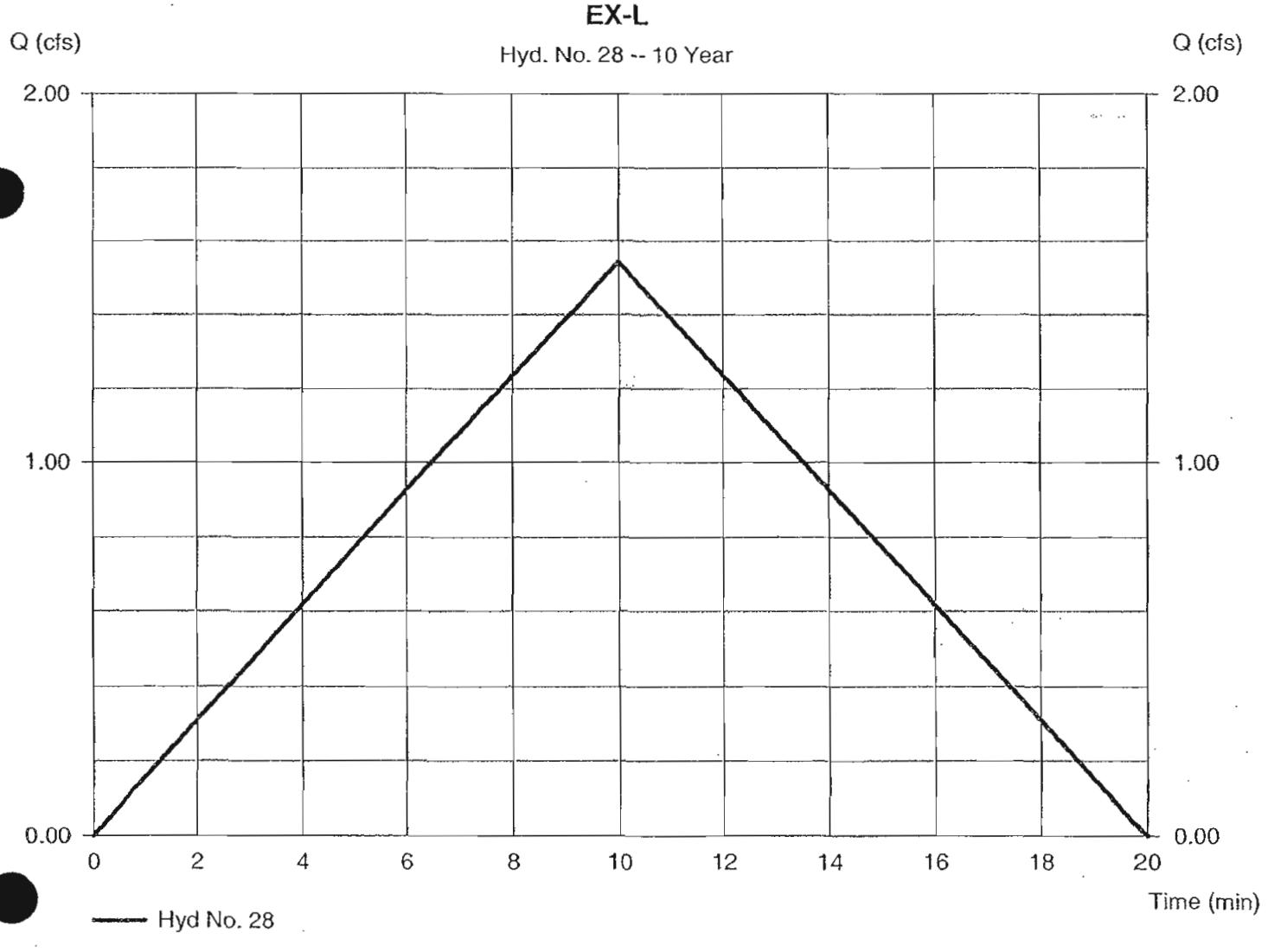

Hydrograph Report

Hydraflow Hydrographs by Intelisolve v9.02 — Wednesday, Dec 9, 2009

Hyd. No. 29

DOWNSPOUT-EX-ABUT 1

Hydrograph type	= Rational	Peak discharge	= 0.431 cfs
Storm frequency	= 10 yrs	Time to peak	= 5 min
Time interval	= 1 min	Hyd. volume	= 129 cuft
Drainage area	= 0.080 ac	Runoff coeff.	= 0.9
Intensity	= 5.990 in/hr	Tc by User	= 5.00 min
IDF Curve	= conndot.idf	Asc/Rec limb fact	= 1/1

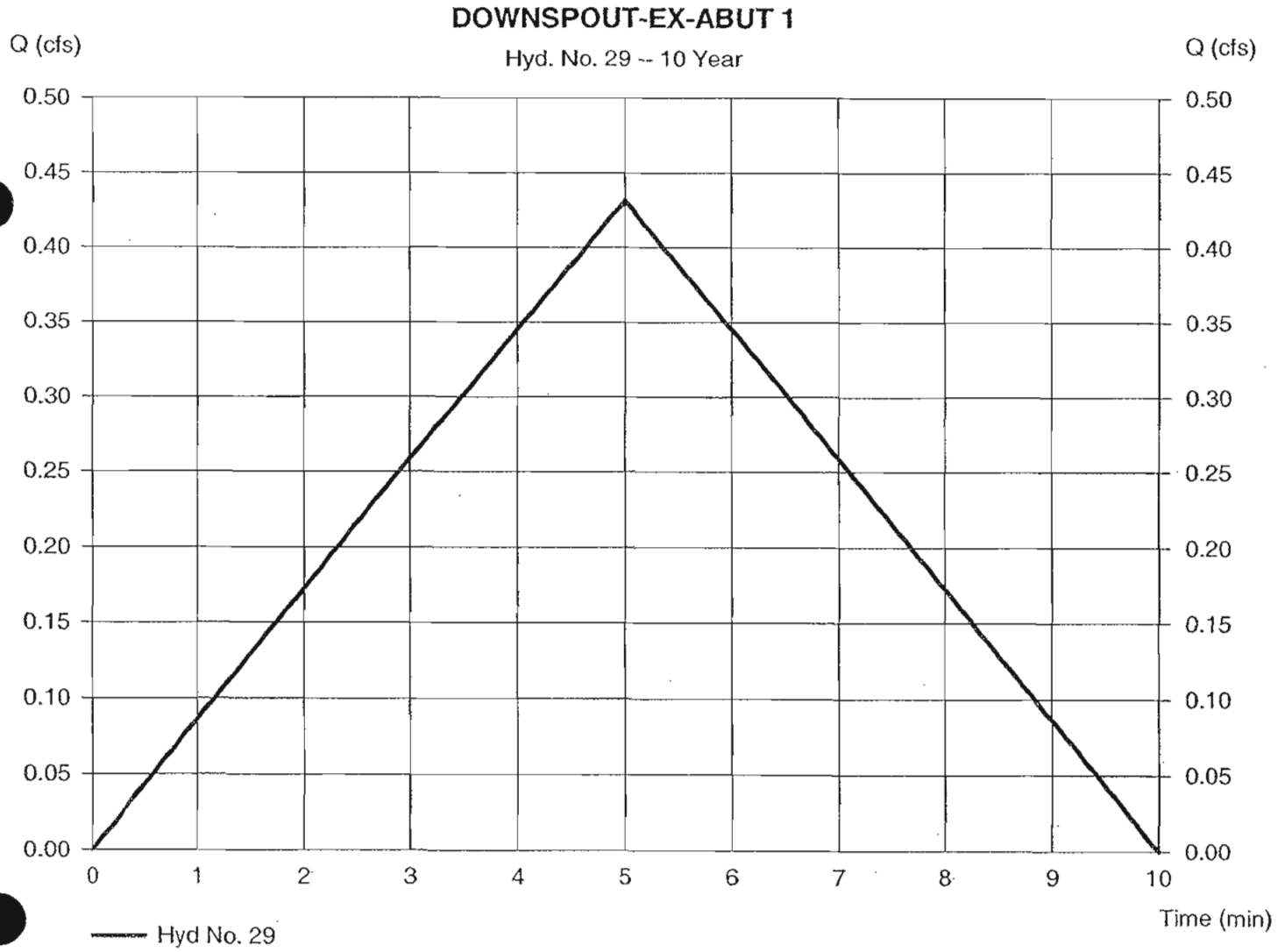

Hydrograph Report

Hydraflow Hydrographs by Intelisolve v9.02 Wednesday, Dec 9, 2009

Hyd. No. 30

TOTAL-EX-L

Hydrograph type	= Combine	Peak discharge	= 1.544 cfs
Storm frequency	= 10 yrs	Time to peak	= 10 min
Time interval	= 1 min	Hyd. volume	= 1,056 cuft
Inflow hyds.	= 28, 29	Contrib. drain. area	= 0.710 ac

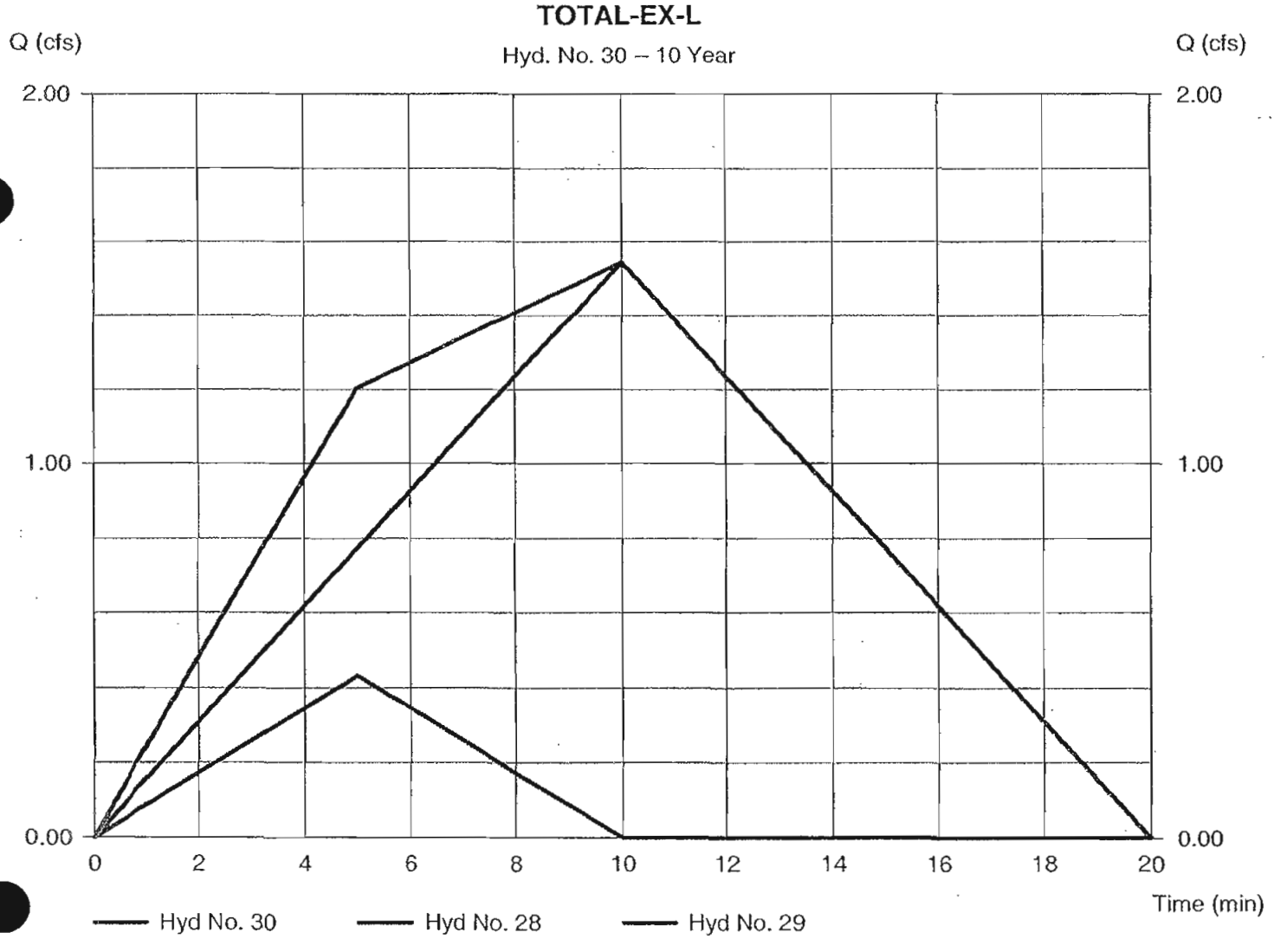

Time of Concentration Worksheet (Page 1 of 3)

Project No. 36937231 By L. Gao Date 9/4/2009

Location Sub-D Checked _____ Date _____

Circle one: Present Developed

Circle one metric units English units

NOTES: Space for as many as two segments per flow type can be used for each worksheet. Must include a map showing travel time flow paths.

Sheet flow (Applicable to Tc only)	Segment ID	1		2		Total (h)
						0.07
1 Surface description (Table 6.C.1)		GRASS		PAVED		
2 Manning's roughness coeff., n (Table 6.C.1)		0.4		0.016		
3 Flow length, L (See Section 6.C.4)	m (ft)	20		130		
4 Two-yr 24-hr rainfall, P2 (Table B-1)	mm (in)	3.25		3.25		
5 Land slope, s	m/m (ft/ft)	0.15		0.05		
6 Travel Time, Tt (Equation 6.C.2)	h	0.0437715	+	0.02312166	=	0.07

Shallow concentrated flow	Segment ID	1				
7 Surface description (paved or unpaved)		PAVED				
8 Flow length, L	m (ft)	70				
9 Watercourse slope, s	m/m (ft/ft)	0.1				
10 Average velocity, V (Equation 6.C.4 or 6.C.5)	m/s (ft/s)	6.4284045				
11 Travel Time, Tt (Equation 6.C.3)	h	0.0030248	+		=	0.00

Time of Concentration Worksheet (Page 1 of 3)

Project No. 36937231 By L. Gao Date 9/4/2009

Location Sub-G Checked _____ Date _____

Circle one: Present Developed

Circle one metric units English units

NOTES: Space for as many as two segments per flow type can be used for each worksheet. Must include a map showing travel time flow paths.

Sheet flow (Applicable to T_c only)	Segment ID	1		2		Total (h)
						0.19
1 Surface description (Table 6.C.1)		GRASS		GRASS		
2 Manning's roughness coeff., n (Table 6.C.1)		0.24		0.24		
3 Flow length, L (See Section 6.C.4)	m (ft)	70		80		
4 Two-yr 24-hr rainfall, P2 (Table B-1)	mm (in)	3.25		3.25		
5 Land slope, s	m/m (ft/ft)	0.35		0.06		
6 Travel Time, Tt (Equation 6.C.2)	h	0.06	+	0.13	=	0.18

Shallow concentrated flow	Segment ID	1				
7 Surface description (paved or unpaved)		Unpaved				
8 Flow length, L	m (ft)	120				
9 Watercourse slope, s	m/m (ft/ft)	0.06				
10 Average velocity, V (Equation 6.C.4 or 6.C.5)	m/s (ft/s)	3.9521292				
11 Travel Time, T_t (Equation 6.C.3)	h	0.0084343	+		=	0.01

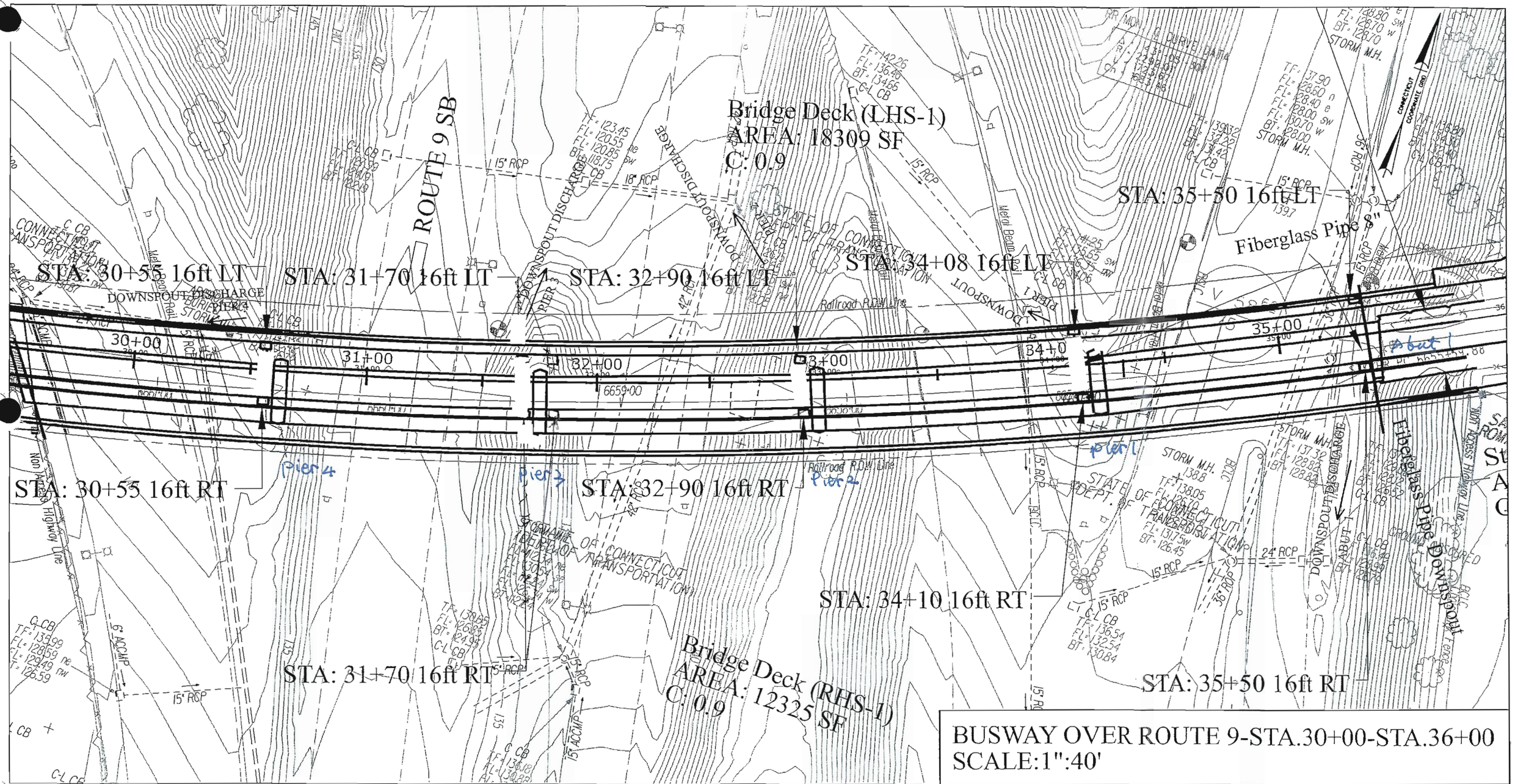
Bridge Deck (LHS-1)
AREA: 18309 SF
C: 0.9
ROUTE 9 SB
STA: 30+55 16ft LT
STA: 31+70 16ft LT
STA: 32+90 16ft LT
STA: 34+08 16ft LT
STA: 35+50 16ft LT
Fiberglass Pipe 8"
DOWNSPOUT DISCHARGE
DOWNSPOUT
30+00
31+00
32+00
33+00
34+0
35+00
Pier 4
Pier 3
Pier 2
Pier 1
STA: 30+55 16ft RT
STA: 32+90 16ft RT
STA: 34+10 16ft RT
STA: 31+70 16ft RT
STA: 35+50 16ft RT
Bridge Deck (RHS-1)
AREA: 12325 SF
C: 0.9
Fiberglass Pipe 8" Downspout
BUSWAY OVER ROUTE 9-STA.30+00-STA.36+00
SCALE:1":40'

URS

				Page	1 of 1
Job: NH-BUSWAY	Project No.	36937231		Sheet	1 of 1
Description: DOWNSPOUT OUTLE	Computed by	LGao		Date	7/27/2010
PIPE ANALYSIS	Checked by			Date	

OUTLET PIPE ANALYSIS

ID	Location	Q Entering inlet (cfs)	Allowed Depth Above Pipe H (in)	Gravity (ft/s^2)	Area of Outlet Required (s.f)	Radius of Outlet Required (in)	Diameter of Outlet Required (in)	Diameter of Outlet Provided (in)
Downspout 1	at Abut 1 R	0.23	8	32.2	0.06	1.62	3.25	8
Downspout 2	at Abut 1 L	0.26	8	32.2	0.07	1.73	3.45	8
Downspout 3	at Pier 1 R	0.29	8	32.2	0.07	1.82	3.65	8
Downspout 4	at Pier 1 L	0.37	8	32.2	0.09	2.06	4.12	8
Downspout 5	at Pier 2 R	0.30	8	32.2	0.08	1.85	3.71	8
Downspout 6	at Pier 2 L	0.41	8	32.2	0.10	2.17	4.34	8
Downspout 7	at Pier 3 R	0.30	8	32.2	0.08	1.85	3.71	8
Downspout 8	at Pier 3 L	0.67	8	32.2	0.17	2.77	5.54	8
Downspout 9	at Pier 4 R	0.34	8	32.2	0.09	1.97	3.95	8
Downspout 10	at Pier 4 L	0.53	8	32.2	0.13	2.47	4.93	8

Notes:

ConnDOT Drainage Manual Eq. 11.14

$Q=(0.6)*(A)*(2*g*H)^{0.5}$

Radius = $(A/Pi)^{0.5}$

Minimum Outlet Size = 8 in

Downspout 1 & 2 @ pier 4

Downspout 3 & 4 @ Pier 3

Downspout 5 & 6 @ Pier 2

Downspout 7 & 8 @ Pier 1

Downspout 9 & 10 @ Abut 1

Scenario: BUSWAY OVER ROUTE 9 -STA.30+00-36+00

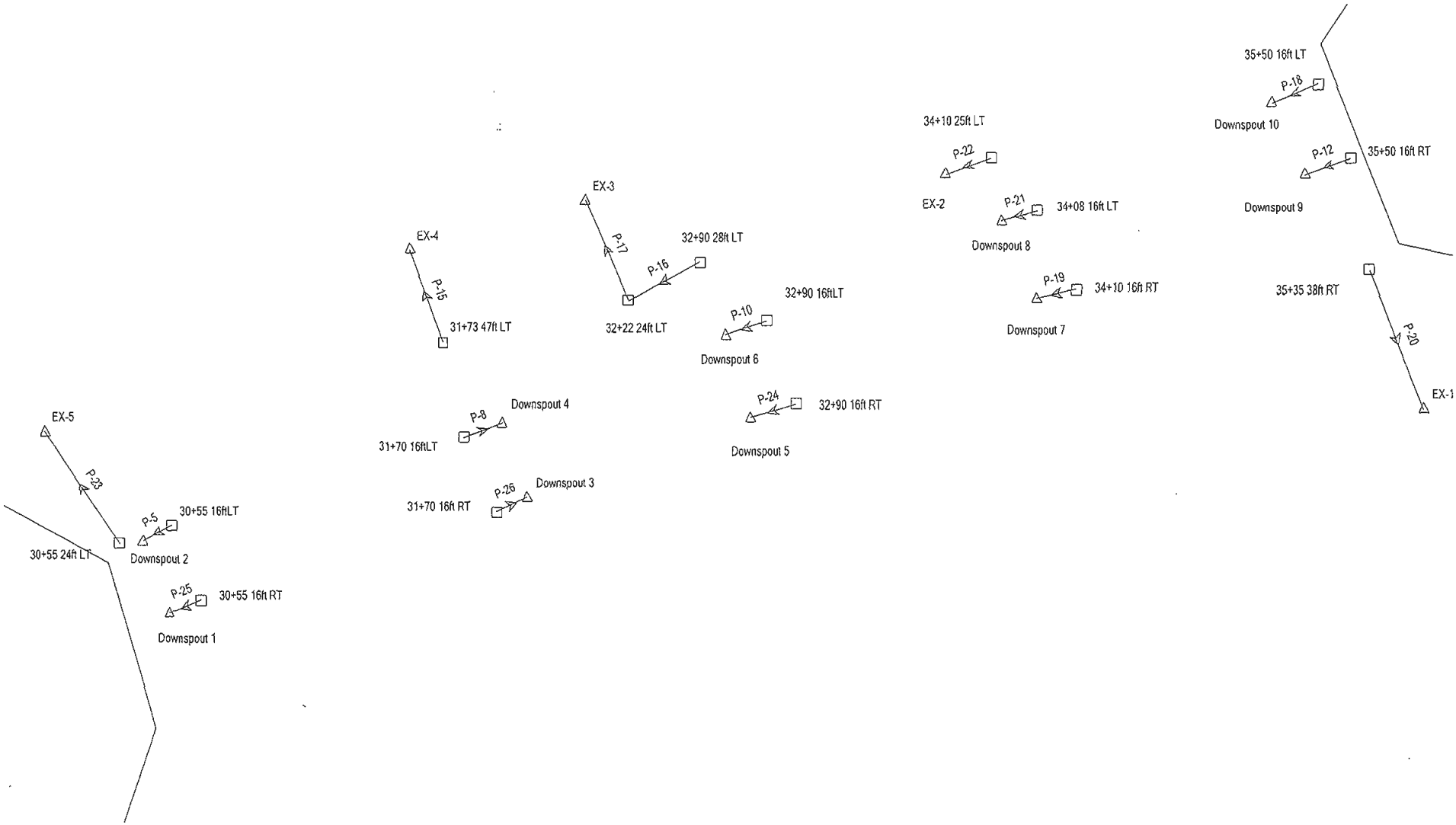

Scenario: BUSWAY OV[illegible] ROUTE 9 -STA.30+00-36+00

Gutter Flow Analysis (10 yr storm event)

Label	Inlet	Area (acres)	Inlet C	Local Tc (min)	Total Inlet CA (acres)	Total Flow To Inlet (cfs)	Longitudinal Slope (ft/ft)	Gutter Cross Slope (ft/ft)	Gutter Ditch Spread (ft)	Intercepted CA (acres)	Gutter Ditch Depth (ft)	Total Bypassed Flow (cfs)	Bypassed CA (acres)	Clogging Factor (%)
30+55 16ft RT	Grate Overhead Scupper with Bolted Grate	0.04233	0.90	5.00	0.03810	0.23	0.005000	0.031	3.60	0.03766	0.11	0.00	0.00044	25.0
30+55 16ftLT	Grate Overheas Supper with Bolted Grate	0.06940	0.90	5.00	0.06246	0.38	0.005000	0.040	3.69	0.04373	0.15	0.11	0.01873	25.0
30+55 24ft LT	Generic Default 100%	0.00000	0.00	0.00	0.00000	0.00	0.005000	0.039	0.00	0.00000	0.00	0.00	0.00000	
31+70 16ft RT	Grate Overhead Scupper with Bolted Grate	0.05526	0.90	5.00	0.05018	0.30	0.005000	0.031	3.99	0.04871	0.12	0.01	0.00146	25.0
31+70 16ftLT	Grate Overheas Supper with Bolted Grate	0.08343	0.90	5.00	0.09381	0.57	0.005000	0.040	4.30	0.06059	0.17	0.20	0.03322	25.0
31+73 47ft LT	Generic Default 100%	0.00000	0.00	0.00	0.00000	0.00	0.005000	0.039	0.00	0.00000	0.00	0.00	0.00000	
32+22 24ft LT	Generic Default 100%	0.00000	0.00	0.00	0.00000	0.00	0.005000	0.039	0.00	0.00000	0.00	0.00	0.00000	
32+90 16ft RT	Grate Overhead Scupper with Bolted Grate	0.05519	0.90	5.00	0.05113	0.31	0.005100	0.031	4.00	0.04959	0.12	0.01	0.00154	25.0
32+90 16ftLT	Grate Overheas Supper with Bolted Grate	0.08343	0.90	5.00	0.10830	0.66	0.005100	0.040	4.52	0.06768	0.18	0.25	0.04062	25.0
32+90 28ft LT	Generic Default 100%	0.00000	0.00	0.00	0.00000	0.00	0.005000	0.039	0.00	0.00000	0.00	0.00	0.00000	
34+08 16ft LT	Grate Overhead Scupper with Bolted Grate	0.08138	0.90	5.00	0.11387	0.69	0.005600	0.040	4.53	0.11042	0.18	0.02	0.00344	25.0
34+10 16ft RT	Grate Overhead Scupper with Bolted Grate	0.05553	0.90	5.00	0.05152	0.31	0.005600	0.031	3.95	0.05006	0.12	0.01	0.00145	25.0
34+10 25ft LT	Generic Default 100%	0.00000	0.00	0.00	0.00000	0.00	0.005000	0.039	0.00	0.00000	0.00	0.00	0.00000	
35+35 38ft RT	Generic Default 100%	0.00000	0.00	0.00	0.00000	0.00	0.005000	0.039	0.00	0.00000	0.00	0.00	0.00000	
35+50 16ft LT	Grate Overhead Scupper with Bolted Grate	0.09357	0.90	5.00	0.08766	0.53	0.020000	0.040	3.24	0.08762	0.13	0.00	0.00004	25.0
35+50 16ft RT	Grate Overhead Scupper with Bolted Grate	0.06116	0.90	5.00	0.05649	0.34	0.020000	0.031	3.22	0.05637	0.10	0.00	0.00013	25.0

Scenario: BUSWAY OV ROUTE 9 -STA.30+00-36+00

Pipe Report

Label	Upstream Node	Downstream Node	Section Size	Length (ft)	Cons Slope (ft/ft)	Total System Flow (cfs)	Full Capacity (cfs)	Average Velocity (ft/s)	Hydraulic Grade Line Out (ft)	Hydraulic Grade Line In (ft)	Upstream Invert Elevation (ft)	Downstream Invert Elevation (ft)	Upstream Ground Elevation (ft)	Downstream Ground Elevation (ft)	Upstream Cover (ft)	Downstream Cover (ft)	Mannings n
P-5	30+55 16ftLT	Downspout 2	8 inch	13.00	0.076923	0.26	4.84	7.42	156.11	157.24	157.00	156.00	164.77	158.50	7.10	1.83	0.009
P-8	31+70 16ftLT	Downspout 4	8 inch	16.00	0.050000	0.37	3.90	7.02	156.15	157.08	156.80	156.00	164.67	158.50	7.20	1.83	0.009
P-10	32+90 16ftLT	Downspout 6	8 inch	17.00	0.047059	0.41	3.79	7.10	155.96	156.90	156.60	155.80	164.07	158.50	6.80	2.03	0.009
P-12	35+50 16ft RT	Downspout 9	8 inch	26.00	0.015385	0.34	2.16	4.52	153.38	153.87	153.60	153.20	162.51	158.50	8.24	4.63	0.009
P-15	31+73 47ft LT	EX-4	12 inch	46.00	0.064130	0.66	9.02	6.70	121.55	123.84	123.50	120.55	127.50	123.45	3.00	1.90	0.013
P-16	32+90 28ft LT	32+22 24ft LT	12 inch	40.00	0.032500	0.70	6.42	5.36	124.11	125.35	125.00	123.70	128.60	129.00	2.60	4.30	0.013
P-17	32+22 24ft LT	EX-3	12 inch	50.00	0.024000	0.70	5.52	4.82	123.50	124.05	123.70	122.50	129.00	126.15	4.30	2.65	0.013
P-18	35+50 16ft LT	Downspout 10	8 inch	19.00	0.042105	0.53	3.58	7.35	153.39	154.34	154.00	153.20	161.54	158.50	6.87	4.63	0.009
P-19	34+10 16ft RT	Downspout 7	8 inch	16.00	0.375000	0.30	10.69	13.48	156.08	162.25	162.00	156.00	164.41	159.00	1.74	2.33	0.009
P-20	35+35 38ft RT	EX-1	12 inch	63.00	0.015873	0.87	4.49	4.42	133.00	133.39	133.00	132.00	138.00	136.49	4.00	3.49	0.013
P-21	34+08 16ft LT	Downspout 8	8 inch	15.00	0.333333	0.67	10.08	16.36	156.12	161.39	161.00	156.00	163.45	159.00	1.78	2.33	0.009
P-22	34+10 25ft LT	EX-2	12 inch	20.00	0.082500	0.97	10.23	8.20	137.35	138.41	138.00	136.35	143.00	141.25	4.00	3.90	0.013
P-23	30+55 24ft LT	EX-5	12 inch	27.00	0.259259	0.49	9.83	6.51	136.00	142.29	142.00	135.00	146.60	140.00	3.60	4.00	0.024
P-24	32+90 16ft RT	Downspout 5	8 inch	19.00	0.063158	0.30	4.39	7.19	155.92	157.25	157.00	155.80	165.04	158.50	7.37	2.03	0.009
P-25	30+55 16ft RT	Downspout 1	8 inch	13.00	0.107692	0.23	5.73	7.99	156.09	157.62	157.40	156.00	165.74	158.50	7.67	1.83	0.009
P-26	31+70 16ft RT	Downspout 3	8 inch	13.00	0.092308	0.29	5.30	8.17	156.11	157.45	157.20	156.00	165.64	158.50	7.77	1.83	0.009

Scenario: BUSWAY OV ROUTE 9 -STA.30+00-36+00

DOT Report

Upstream Node	Downstream Node	Pipe Flow Time (min)	System Flow Time (min)	Upstream Inlet CA (acres)	System CA (acres)	System Intensity (in/hr)	Section Size	Material	Mannings n	Length (ft)	Upstream Invert Elevation (ft)	Downstream Invert Elevation (ft)	Constructed Slope (ft/ft)	Full Capacity (cfs)	Total System Flow (cfs)	Average Velocity (ft/s)
30+55 16ftLT	Downspout 2	0.03	5.00	0.06246	0.04373	6.00	8 inch	Fiberglass Pipe	0.009	13.00	157.00	156.00	0.076923	4.84	0.26	7.42
31+70 16ftLT	Downspout 4	0.04	5.00	0.07508	0.06059	6.00	8 inch	Fiberglass Pipe	0.009	16.00	156.80	156.00	0.050000	3.90	0.37	7.02
32+90 16ftLT	Downspout 6	0.04	5.00	0.07508	0.06768	6.00	8 inch	Fiberglass Pipe	0.009	17.00	156.60	155.80	0.047059	3.79	0.41	7.10
35+50 16ft RT	Downspout 9	0.10	5.00	0.05504	0.05637	6.00	8 inch	Fiberglass Pipe	0.009	26.00	153.60	153.20	0.015385	2.16	0.34	4.52
31+73 47ft LT	EX-4	0.11	0.00	0.00000	0.00000	0.00	12 inch	Concrete	0.013	46.00	123.50	120.55	0.064130	9.02	0.66	6.70
32+90 28ft LT	32+22 24ft LT	0.12	0.00	0.00000	0.00000	0.00	12 inch	Concrete	0.013	40.00	125.00	123.70	0.032500	6.42	0.70	5.36
32+22 24ft LT	EX-3	0.17	0.12	0.00000	0.00000	0.00	12 inch	Concrete	0.013	50.00	123.70	122.50	0.024000	5.52	0.70	4.82
35+50 16ft LT	Downspout 10	0.04	5.00	0.08421	0.08762	6.00	8 inch	Fiberglass Pipe	0.009	19.00	154.00	153.20	0.042105	3.58	0.53	7.35
34+10 16ft RT	Downspout 7	0.02	5.00	0.04998	0.05006	6.00	8 inch	Fiberglass Pipe	0.009	16.00	162.00	156.00	0.375000	10.69	0.30	13.48
35+35 38ft RT	EX-1	0.24	0.00	0.00000	0.00000	0.00	12 inch	Concrete	0.013	63.00	133.00	132.00	0.015873	4.49	0.87	4.42
34+08 16ft LT	Downspout 8	0.02	5.00	0.07324	0.11042	6.00	8 inch	Fiberglass Pipe	0.009	15.00	161.00	156.00	0.333333	10.08	0.67	16.36
34+10 25ft LT	EX-2	0.04	0.00	0.00000	0.00000	0.00	12 inch	Concrete	0.013	20.00	138.00	136.35	0.082500	10.23	0.97	8.20
30+55 24ft LT	EX-5	0.07	0.00	0.00000	0.00000	0.00	12 inch	CMP	0.024	27.00	142.00	135.00	0.259259	9.83	0.49	6.51
32+90 16ft RT	Downspout 5	0.04	5.00	0.04967	0.04959	6.00	8 inch	Fiberglass Pipe	0.009	19.00	157.00	155.80	0.063158	4.39	0.30	7.19
30+55 16ft RT	Downspout 1	0.03	5.00	0.03810	0.03766	6.00	8 inch	Fiberglass Pipe	0.009	13.00	157.40	156.00	0.107692	5.73	0.23	7.99
31+70 16ft RT	Downspout 3	0.03	5.00	0.04973	0.04871	6.00	8 inch	Fiberglass Pipe	0.009	13.00	157.20	156.00	0.092308	5.30	0.29	8.17

DRAINAGE MAP BUSWAY OVER ROUTE 9

EXISTING CONDITION SCALE 1"=100'

DRAINAGE MAP BUSWAY OVER ROUTE 9
PROPOSED CONDITION SCALE 1"=100'

Existing Bridge Deck Drainage System

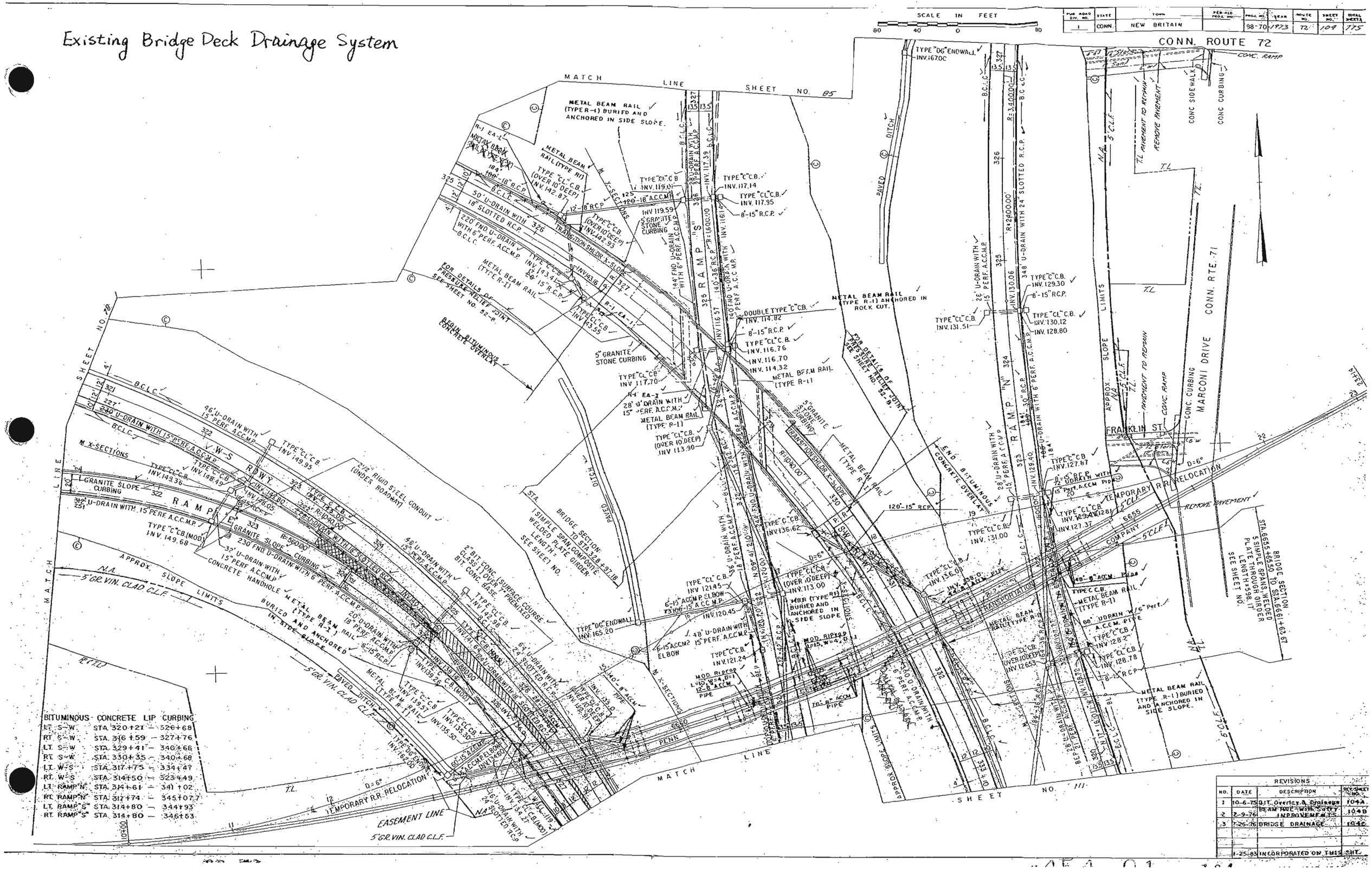

NEW BRITAIN-HARTFORD BUSWAY
New Britain to Hartford
URS PROJECT NO.36937230

URS
DESIGNED BY: DS DATE:
CHECKED BY: DATE:
SHEET 1 OF 1

Catch Basin Label	Inlet Type	Bypass Target	Drainage Area (ACRE)	Tc (MIN)	I10 (IN/HR)	Impervious Coeff.	Impervious Area (ac)	Pervious Coeff.	Pervious Area (ac)	Weighted Runoff Coefficient	Q (CFS)
BUSWAY OVEREAST STREET -STA.104+00-STA.110+00											
104+00 16LT	38" SCUPPER	101+00 16ft LT	0.0551	5	6	0.9	0.0551	0.3		0.9	0.298
104+00 16RT	38" SCUPPER	101+00 16ft RT	0.2452	5	6	0.9	0.2452	0.3		0.9	1.324
105+00 16RT	38" SCUPPER	104+00 16ft RT	0.0367	5	6	0.9	0.0367	0.3		0.9	0.198
110+00 16LT	38" SCUPPER	113+00 16ft LT	0.0765	5	6	0.9	0.0765	0.3		0.9	0.413
110+00 16RT	38" SCUPPER	113+00 16ft RT	0.0767	5	6	0.9	0.0767	0.3		0.9	0.414

Scenario: BUSWAY OVER EAST STREET-STA.104+00-STA.110+00

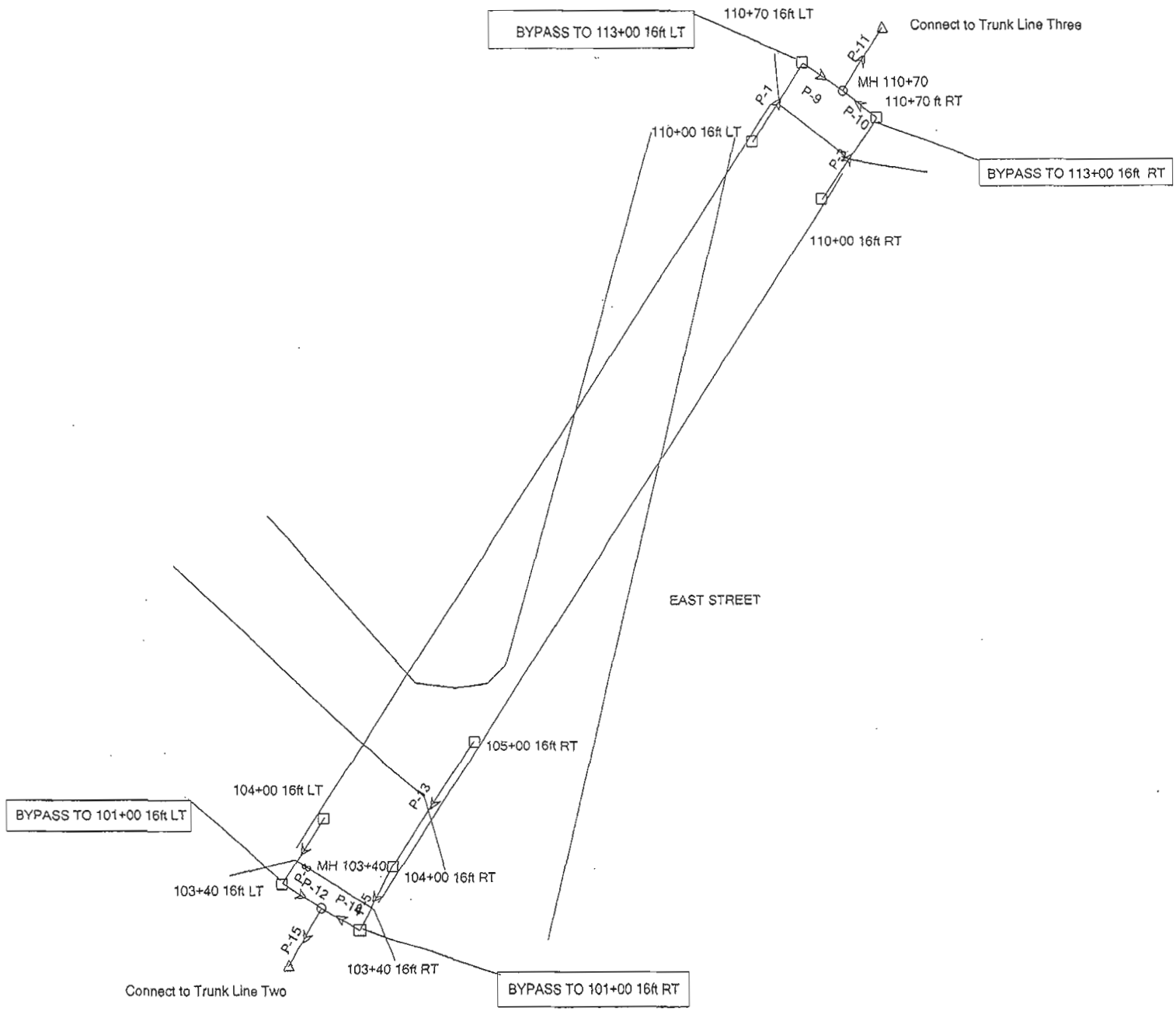

Title: NB-HARTFORD BUSYWAY
p:\...\stormcad\bridgedeck-east-street.stm
12/04/09 07:14:03 PM

URS CorporationRocky Hill
© Bentley Systems, Inc. Haestad Methods Solution Center Watertown, CT 06795 USA +1-203-755-1666

Project Engineer: Li Gao
StormCAD v5.6 [05.06.014.00]
Page 1 of 1

Scenario: BUSWAY OVER EAS TREET-STA.104+00-STA.110+00

Gutter Flow Analysis (10 yr storm event)

Label	Inlet	Area (acres)	Inlet C	Local Tc (min)	Total Inlet CA (acres)	Total Flow To Inlet (cfs)	Longitudinal Slope (ft/ft)	Gutter Cross Slope (ft/ft)	Gutter Ditch Spread (ft)	Intercepted CA (acres)	Gutter Ditch Depth (ft)	Total Bypassed Flow (cfs)	Bypassed CA (acres)	Clogging Factor (%)
103+40 16ft L	Combination Type C CB	0.0000	0.00	0.00	0.0216	0.13	030000	0.040	1.77	0.0216	0.07	0.00	0.0000	0.0
103+40 16ft F	Combination Type C CB	0.0000	0.00	0.00	0.0764	0.46	030000	0.040	2.85	0.0746	0.11	0.01	0.0018	0.0
104+00 16ft L	Grate Overheas Supper with Bolted Grate	0.0551	0.90	5.00	0.0496	0.30	030000	0.035	2.63	0.0280	0.09	0.13	0.0216	25.0
104+00 16ft F	Grate Overheas Supper with Bolted Grate	0.0367	0.90	5.00	0.1357	0.82	030000	0.040	3.54	0.0593	0.14	0.46	0.0764	25.0
105+00 16ft F	Grate Overheas Supper with Bolted Grate	0.2452	0.90	5.00	0.2207	1.33	003000	0.040	6.87	0.1180	0.26	0.62	0.1027	25.0
110+00 16ft L	Grate Overheas Supper with Bolted Grate	0.0767	0.90	5.00	0.0690	0.42	040000	0.040	2.60	0.0431	0.10	0.16	0.0260	25.0
110+00 16ft F	Grate Overheas Supper with Bolted Grate	0.0765	0.90	5.00	0.0688	0.42	040000	0.040	2.59	0.0430	0.10	0.16	0.0259	25.0
110+70 16ft L	Combination Type C CB	0.0000	0.00	0.00	0.0260	0.16	040000	0.040	1.80	0.0260	0.07	0.00	0.0000	0.0
110+70 ft RT	Combination Type C CB	0.0000	0.00	0.00	0.0259	0.16	040000	0.040	1.80	0.0259	0.07	0.00	0.0000	0.0

Scenario: BUSWAY OVER EA TREET-STA.104+00-STA.110+00

DOT Report

Upstream Node	Downstream Node	Pipe Flow Time (min)	System Flow Time (min)	Upstream Inlet CA (acres)	System CA (acres)	System Intensity (in/hr)	Section Size	Material	Mannings n	Length (ft)	Upstream Invert Elevation (ft)	Downstream Invert Elevation (ft)	Constructed Slope (ft/ft)	Full Capacity (cfs)	Total System Flow (cfs)	Average Velocity (ft/s)
110+00 16ft LT	110+70 16ft L	0.24	5.00	0.0690	0.0431	6.00	8 inch	Fiberglass Pipe	0.009	70.00	128.30	126.70	0.022857	2.64	0.26	4.8
110+00 16ft RT	110+70 ft RT	0.24	5.00	0.0688	0.0430	6.00	8 inch	Fiberglass Pipe	0.009	70.00	128.30	126.70	0.022857	2.64	0.26	4.8
104+00 16ft RT	103+40 16ft R	0.15	5.22	0.0331	0.1773	5.96	8 inch	Fiberglass Pipe	0.009	60.00	123.35	122.30	0.017500	2.31	1.06	6.5
104+00 16ft LT	103+40 16ft L	0.30	5.00	0.0496	0.0280	6.00	8 inch	Fiberglass Pipe	0.009	60.00	123.00	122.30	0.011667	1.89	0.17	3.3
110+70 16ft LT	MH 110+70	0.07	5.24	0.0000	0.0690	5.95	12 inch	Concrete	0.013	15.00	126.40	126.20	0.013333	4.11	0.41	3.4
110+70 ft RT	MH 110+70	0.07	5.24	0.0000	0.0688	5.95	12 inch	Concrete	0.013	15.00	126.40	126.20	0.013333	4.11	0.41	3.4
MH 110+70	Connect to Tr	0.78	5.32	N/A	0.1379	5.94	12 inch	Concrete	0.013	230.00	126.20	121.05	0.022391	5.33	0.83	4.9
103+40 16ft LT	MH 103+40	0.08	5.30	0.0000	0.0496	5.94	12 inch	Concrete	0.013	15.00	122.00	121.80	0.013333	4.11	0.30	3.0
105+00 16ft RT	104+00 16ft R	0.22	5.00	0.2207	0.1180	6.00	8 inch	Fiberglass Pipe	0.009	100.00	126.76	123.35	0.034100	3.22	0.71	7.4
103+40 16ft RT	MH 103+40	0.05	5.38	0.0000	0.2519	5.92	12 inch	Concrete	0.013	15.00	122.00	121.80	0.013333	4.11	1.50	4.8
MH 103+40	Connect to Tr	0.60	5.43	N/A	0.3015	5.91	12 inch	Concrete	0.013	240.00	121.80	115.10	0.027917	5.95	1.80	6.6

Scenario: BUSWAY OVER EA[illegible]TREET-STA.104+00-STA.110+00

Pipe Report

Label	Upstream Node	Downstream Node	Section Size	Length (ft)	Cons Slope (ft/ft)	Total System Flow (cfs)	Full Capacity (cfs)	Average Velocity (ft/s)	Hydraulic Grade Line Out (ft)	Hydraulic Grade Line In (ft)	Upstream Invert Elevation (ft)	Downstream Invert Elevation (ft)	Upstream Ground Elevation (ft)	Downstream Ground Elevation (ft)	Upstream Cover (ft)	Downstream Cover (ft)	Mannings n
P-1	110+00 16ft	110+70 16ft L	8 inch	70.00	0.022857	0.26	2.64	4.8	126.84	128.54	128.30	126.70	134.46	133.30	5.49	5.93	0.009
P-3	110+00 16ft	110+70 ft RT	8 inch	70.00	0.022857	0.26	2.64	4.8	126.84	128.54	128.30	126.70	134.46	133.30	5.49	5.93	0.009
P-5	104+00 16ft	103+40 16ft F	8 inch	60.00	0.017500	1.06	2.31	6.5	122.62	123.84	123.35	122.30	127.49	126.00	3.47	3.03	0.009
P-8	104+00 16ft	103+40 16ft L	8 inch	60.00	0.011667	0.17	1.89	3.3	122.44	123.19	123.00	122.30	128.35	126.80	4.68	3.83	0.009
P-9	110+70 16ft	MH 110+70	12 inch	15.00	0.013333	0.41	4.11	3.4	126.58	126.67	126.40	126.20	133.30	133.80	5.90	6.60	0.013
P-10	110+70 ft RT	MH 110+70	12 inch	15.00	0.013333	0.41	4.11	3.4	126.58	126.67	126.40	126.20	133.30	133.80	5.90	6.60	0.013
P-11	MH 110+70	Connect to Tr	12 inch	230.00	0.022391	0.83	5.33	4.9	121.32	126.58	126.20	121.05	133.80	124.89	6.60	2.84	0.013
P-12	103+40 16ft	MH 103+40	12 inch	15.00	0.013333	0.30	4.11	3.0	122.37	122.36	122.00	121.80	126.80	126.52	3.80	3.72	0.013
P-13	105+00 16ft	104+00 16ft F	8 inch	100.00	0.034100	0.71	3.22	7.4	123.87	127.16	126.76	123.35	131.15	127.49	3.72	3.47	0.009
P-14	103+40 16ft	MH 103+40	12 inch	15.00	0.013333	1.50	4.11	4.8	122.37	122.52	122.00	121.80	126.00	126.52	3.00	3.72	0.013
P-15	MH 103+40	Connect to Tr	12 inch	240.00	0.027917	1.80	5.95	6.6	116.10	122.37	121.80	115.10	126.52	118.79	3.72	2.69	0.013

Profile: Profile - 1

Scenario: BUSWAY OVER EAST STREET-STA.104+00-STA.110+00

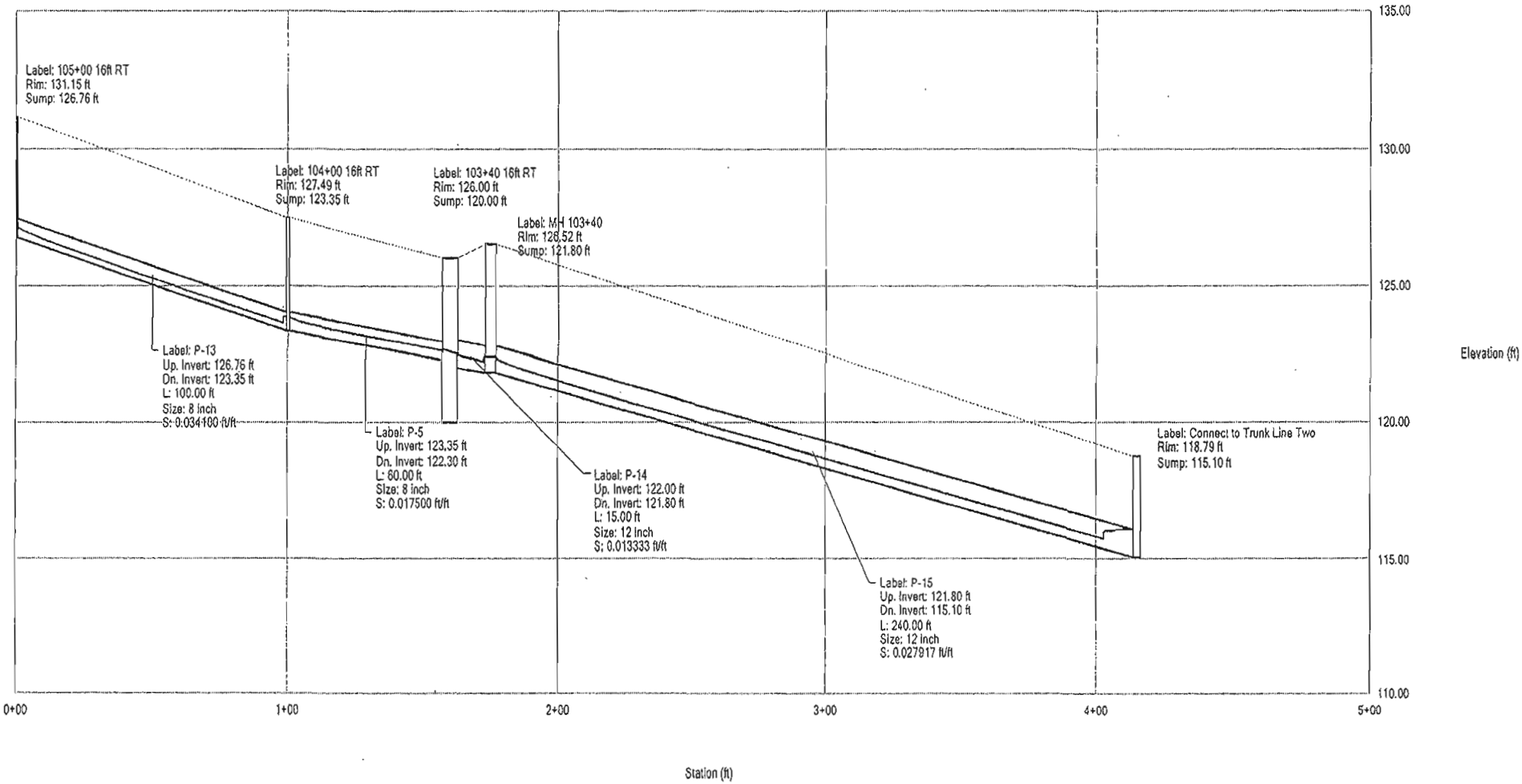

Profile: Profile - 2

Scenario: BUSWAY OVER EAST STREET-STA.104+00-STA.110+00

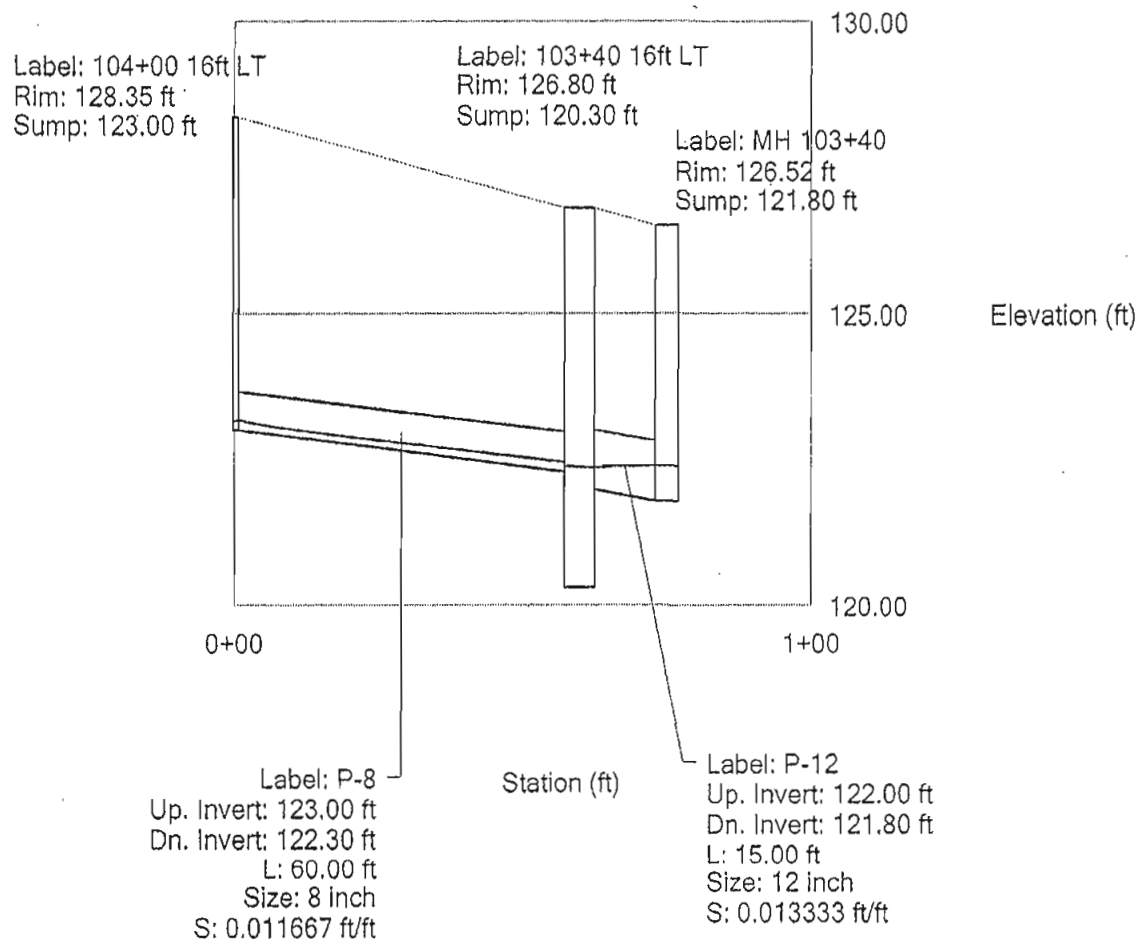

Profile: Profile - 3

Scenario: BUSWAY OVER EAST STREET-STA.104+00-STA.110+00

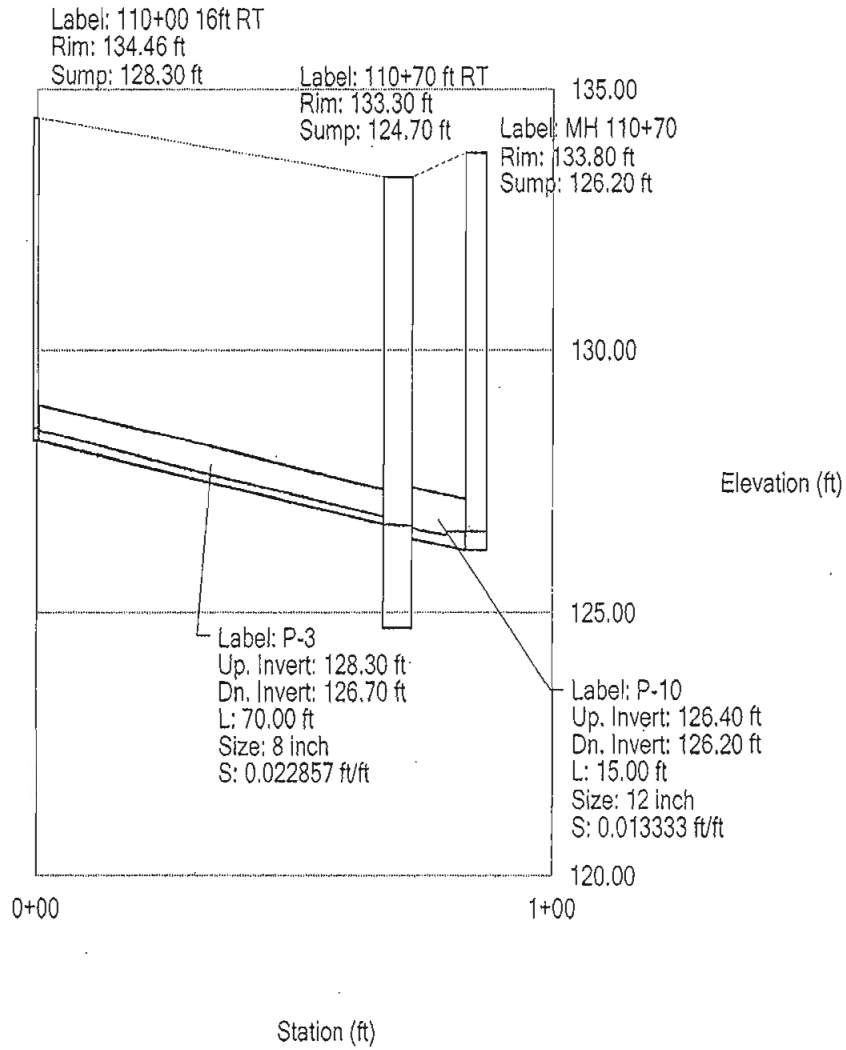

Profile: Profile - 4

Scenario: BUSWAY OVER EAST STREET-STA.104+00-STA.110+00

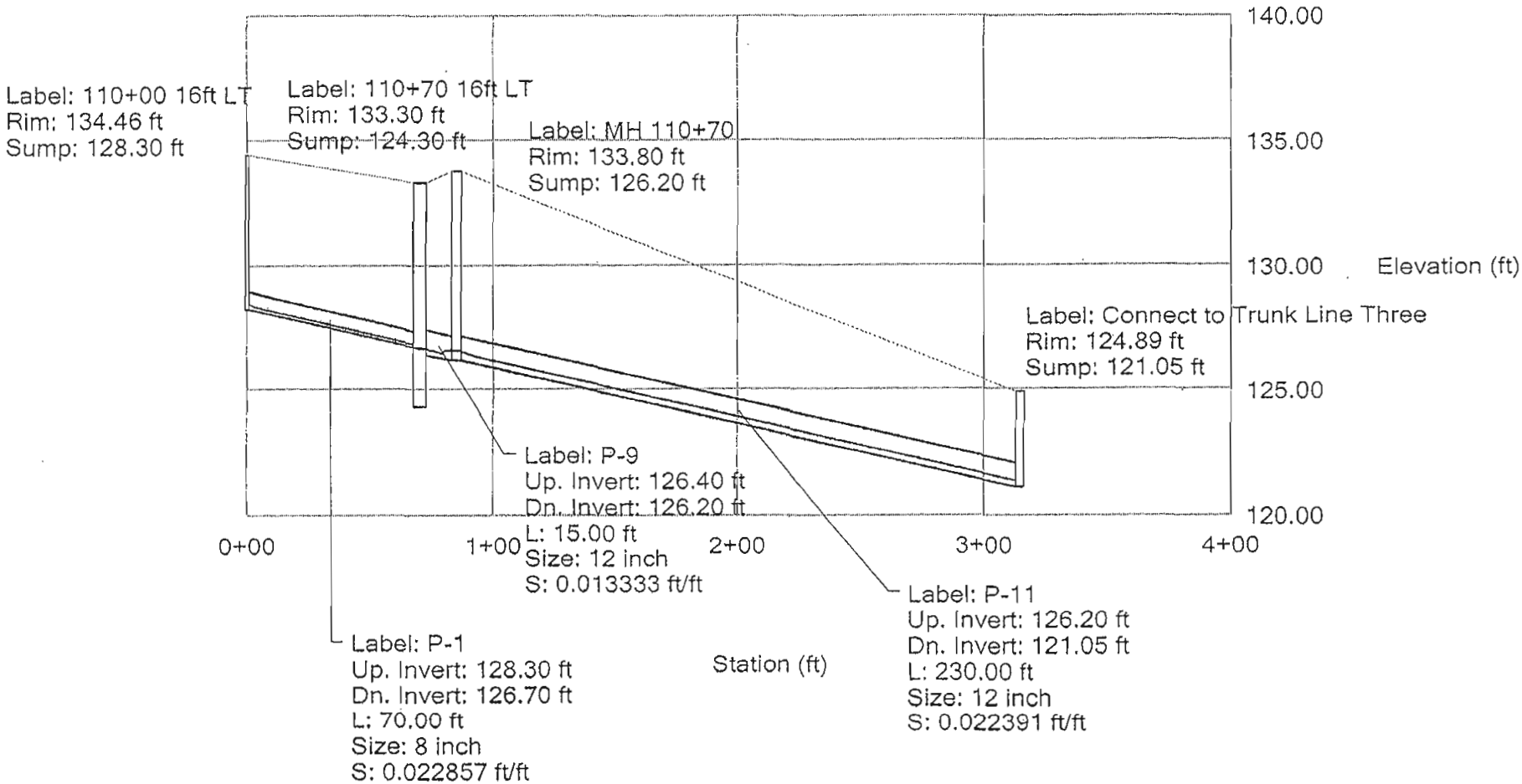

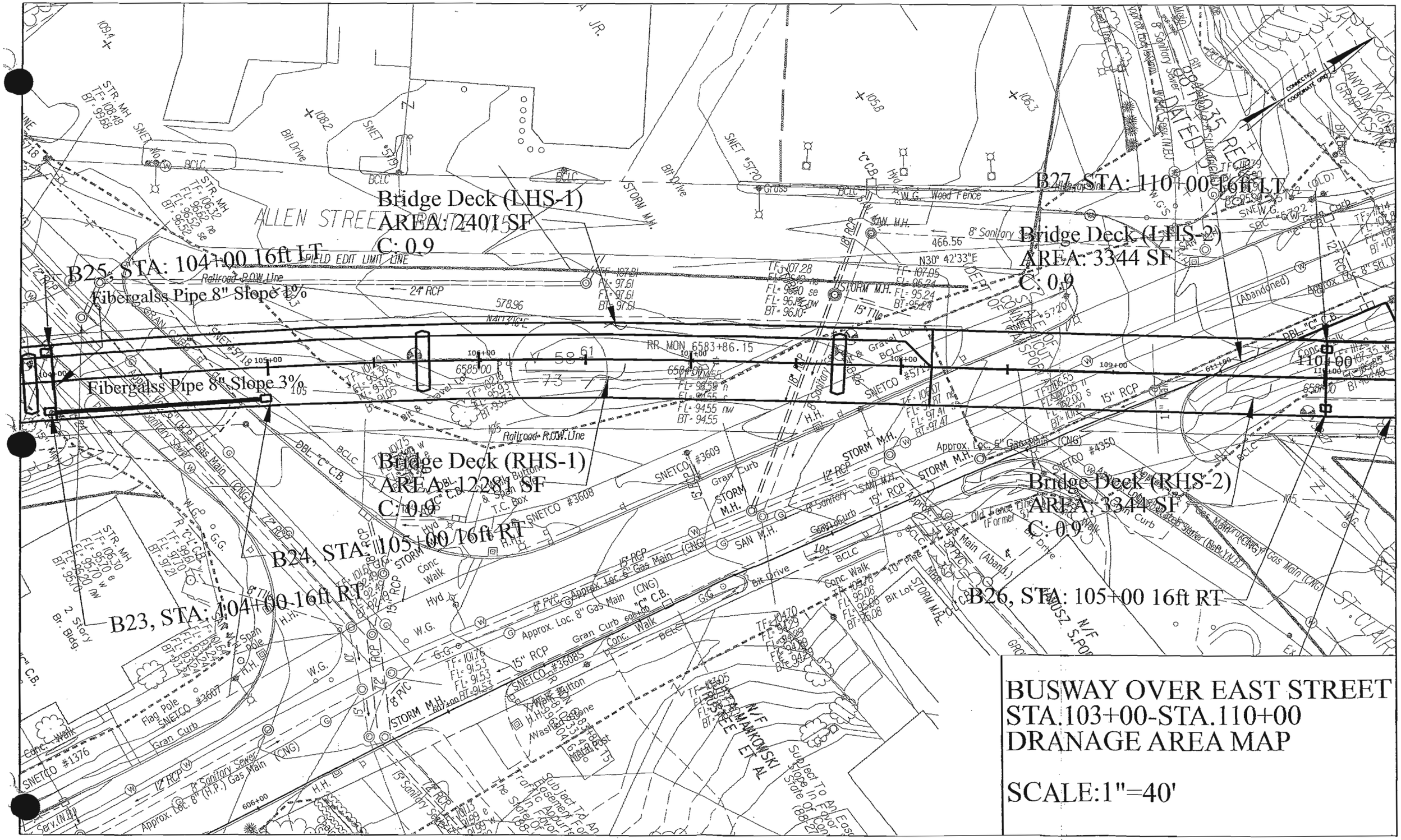
Bridge Deck (LHS-1)
AREA: 2401 SF
C: 0.9
B25, STA: 104+00 16ft LT
Fibergalss Pipe 8" Slope 1%
Fibergalss Pipe 8" Slope 3%
B27, STA: 110+00 16ft LT
Bridge Deck (LHS-2)
AREA: 3344 SF
C: 0.9
110+00
Bridge Deck (RHS-1)
AREA: 1228 SF
C: 0.9
B24, STA: 105+00 16ft RT
B23, STA: 104+00 16ft RT
Bridge Deck (RHS-2)
AREA: 3344 SF
C: 0.9
B26, STA: 105+00 16ft RT
ALLEN STREET
Railroad R.O.W. Line
24" RCP
15" RCP
15" Tile
STORM M.H.
SAN. M.H.
W.G. Wood Fence
8" Sanitary Sewer
N30° 42'33"E
RR MON 6583+86.15
578.96
466.56
Bit Drive
Gran Curb
Conc. Walk
Approx. Loc. 8" Gas Main (CNG)
Approx. Loc. 8" (H.P.) Gas Main (CNG)
SNETCO #3608
SNETCO #3609
SNETCO #3607
SNETCO #1376
SNETCO #3608S
SNETCO #4350
Flag Pole
Br. Bldg.
2 Story
Subject To An Easement In Favor Of The State Of Connecticut
N/F MANKOWSKI ET AL
N/F HOUSZ S.POS
BUSWAY OVER EAST STREET
STA.103+00-STA.110+00
DRANAGE AREA MAP
SCALE:1"=40'

Appendix I

Water Quality Basin (WQB) Design

- Design Requirement
- Water Quality Volume estimate for water quality control pond at Sta.98+00
- Reference

Introduction:

The basin at Sta. 98+00 is designed to address storm water quality control and labeled "Water Quality Basin" on the plans. It is sized based on Water Quality Volume (WQV). All the storm runoff will be routed through the water quality basin first, and then discharged into the Piper Brook. The outlet structure for this basin is a flow control structure. In this structure, flow in excess of the WQV will pass to the Piper Brook directly through a 24" RCP without detention. The double grate frame on the top of the outlet structure will function as a weir, and is designed based on the water surface elevation when the entire WQV is being held in the Water Quality Basin. A 6" outlet orifice is proposed to ensure the WQV can be released over a period of 24 hours. A trash rack is proposed to protect the orifice from clogging.

Basin Design Criteria:

1. Water Quality Basin is designed to capture and treat 90% of entire runoff volume of the average annual storm event. WQV is equivalent to the runoff associated with the first one-inch of rainfall. (*)
2. Safe passage of the 100-year storm event. (*)
3. Shape – Wedge shaped (Wider at outlet) >3:1 length-to width ratio (average width). (*)
4. Side slope – 3:1 (H: V) side slope is proposed for basin earthwork design. The side slope at South east comer of the basin is flatter than 4:1 (H: V) for providing easy maintenance access. (**)
5. A sediment forebay is provided by proposing a gabion basket barrier in the west portion of the WQV basin. The top elevation of the barrier (In form of a weir) is elevated in a manner such that at least 10 percent of the WQV will be held during the storm events. In addition, the required sediment storage volume is considered in the design of the forebay. (** and ***)
6. Other Considerations
   - 2% bottom slope for the WQV basin to prevent ponding; (*)
   - A flat slope is proposed in the forebay area where sediment is easily deposited. The forebay average depth is 3 feet which is used to prevent re-suspension of collected sediments during the design storm; (*,**,***)
   - Perimeter vegetation; (*)

- Emergency spill way (*)
- The elevations for the outlet structure are designed to ensure the top of the double grate frame one foot below the crest of the emergency spill way. (*)
- The access road width is 8 feet (*)

Note: * - Refer to Drainage Manual, Connecticut Department of Transportation, dated 2000.

** - Refer to 2004 Connecticut Storm Water Quality Manual.

*** - Refer to 2002 Connecticut Guidelines for Soil Erosion and Sediment Control.

Basin Sizing:

Water Quality Volume (WQV) estimation for water quality control basin at Sta. 98+00:

According to the drainage areas plan, the basin for water quality control will be subject to the runoff from the 10.25 acres watershed.

$$\mathbf{WQV} = \frac{(1")(R)(A)}{12}$$

Where: 1" refer to the first one-inch of rainfall.
WQV = Water Quality Volume, hectare meters (acre ft)
R = Volumetric Runoff Coefficient=0.05+0.009(I)
I = Percent of Impervious Cover, 80 (%)
A = Site area, 10.25 acres

$$\mathbf{WQV} = \frac{(1")(0.05 + 0.009 \cdot 80)(10.25)}{12}$$

$$= 0.7 \text{ acre ft}$$

Basin storage capacity is checked by numerical basin routing simulation model – Hydraflow and Hydrograph 2007, Version 9.02 by Intelisolve. The simulation results are presented in following calculations.

URS

Sediment Forebay Sizing:

- Volume > 10% WQV = 0.07 acre ft
- Sediment Storage Volume - Soil Loss Calculation sheet

URS

				Page	of
Job: New Britain – Hartford Busway	Project No.	36937230		Sheet	1 of 1
Description: Soil Loss Calculation	Computed by	LGAO		Date	5/19/2009
- For Sediment Forebay	Checked by	DS		Date	5/20/2009

Sediment Forebay Volume > 10% WQV + Sediment Storage Volume

DRAINAGE AREA : 10.25 acres
MAINTAIN FREQUENCY: 1 YEAR

Universal Soil Loss Equation (USLE)
A = RKLSCP

Where:

	Description	Values	
A=	Average annual soil loss in tons per acre per year.	1.71444	
R=	Rainfall and runoff erosivity index for a given location.	157	*
K=	Soil erodibility factor.	0.28	*
LS=	L is slope length factor. S is slope steepness factor.	3	*
P=	Conservation or support practice factor.	1	
C=	Cover and management practice factor.	0.013	*

Note:

* - the value of those factors are read from the following materials:

1. Factor R value is read from Natural Resources Conservation Service Climate Database for Hartford county. (Refer to attached reference files)
2. Factor K value is read from National Cooperative Soil Survey Report, K Factor, Whole Soil - State of Connecticut, Natural Resourse Conservation Service. (Refer to attached reference files)
3. Factor LS is read from National Cooperative Soil Survey Report, Representive Slope - State of Connecticut, Natural Resourse Conservation Service and Figure A3, Topographic LS factor, Estimating Soil Loss with the USLE.(Refer to attached reference files)
4. Factor C value is read from Table A1 Cover management, "C' factors for permanent pasture, rangeland, and idle land, Estimating Soil Loss with the USLE. (Refer to attached reference files)

⇨ **Sediment Forebay Storage Volum at Sta. 98+00 - V**

V = Drainage Area x A x 27.17 = 478 cu.ft and Say it 500 cu.ft

27.17 - a factor to convert tonnes to cubic feet based on a typical density of Saturated sediment of 1.3 g/cm^3

Hydraflow Table of Contents

NB-H Busway-2_8182009.gpw

Hydraflow Hydrographs by Intelisolve v9.02

Monday, Aug 24, 2009

Watershed Model Schematic 1

2 - Year

Summary Report 2
Hydrograph Reports 3
Hydrograph No. 1, Manual, Proposed Condition 3
Hydrograph No. 2, Reservoir, Pond Routing 4
Pond Report - WQV 5

10 - Year

Summary Report 6
Hydrograph Reports 7
Hydrograph No. 1, Manual, Proposed Condition 7
Hydrograph No. 2, Reservoir, Pond Routing 8
Pond Report - WQV 9

100 - Year

Summary Report 10
Hydrograph Reports 11
Hydrograph No. 1, Manual, Proposed Condition 11
Hydrograph No. 2, Reservoir, Pond Routing 12
Pond Report - WQV 13

Watershed Model Schematic

Hydraflow Hydrographs by Intelisolve v9.02

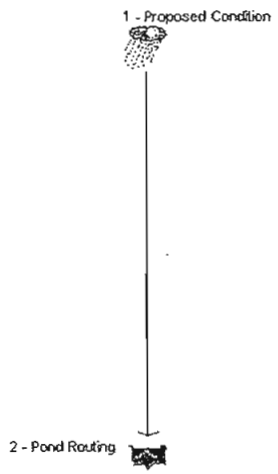

Legend

Hyd.	Origin	Description
	Manual	Proposed Condition
	Reservoir	Pond Routing

Hydrograph Summary Report

Hydraflow Hydrographs by Intelisolve v9.02

Hyd.	Hydrograph type (origin)	Peak flow (cfs)	Time interval (min)	Time to peak (min)	Hyd. volume (cuft)	Inflow hyd(s)	Maximum elevation (ft)	Total strge used (cuft)	Hydrograph description
1	Manual	14.64	1	30	26,300	---	------	------	Proposed Condition
2	Reservoir	1.389	1	57	24,975	1	97.24	23,274	Pond Routing

Hydrograph Report

Hydraflow Hydrographs by Intelisolve v9.02 — Monday, Aug 24, 2009

Hyd. No. 1

Proposed Condition

Hydrograph type	= Manual	Peak discharge	= 14.64 cfs
Storm frequency	= 2 yrs	Time to peak	= 30 min
Time interval	= 1 min	Hyd. volume	= 26,300 cuft

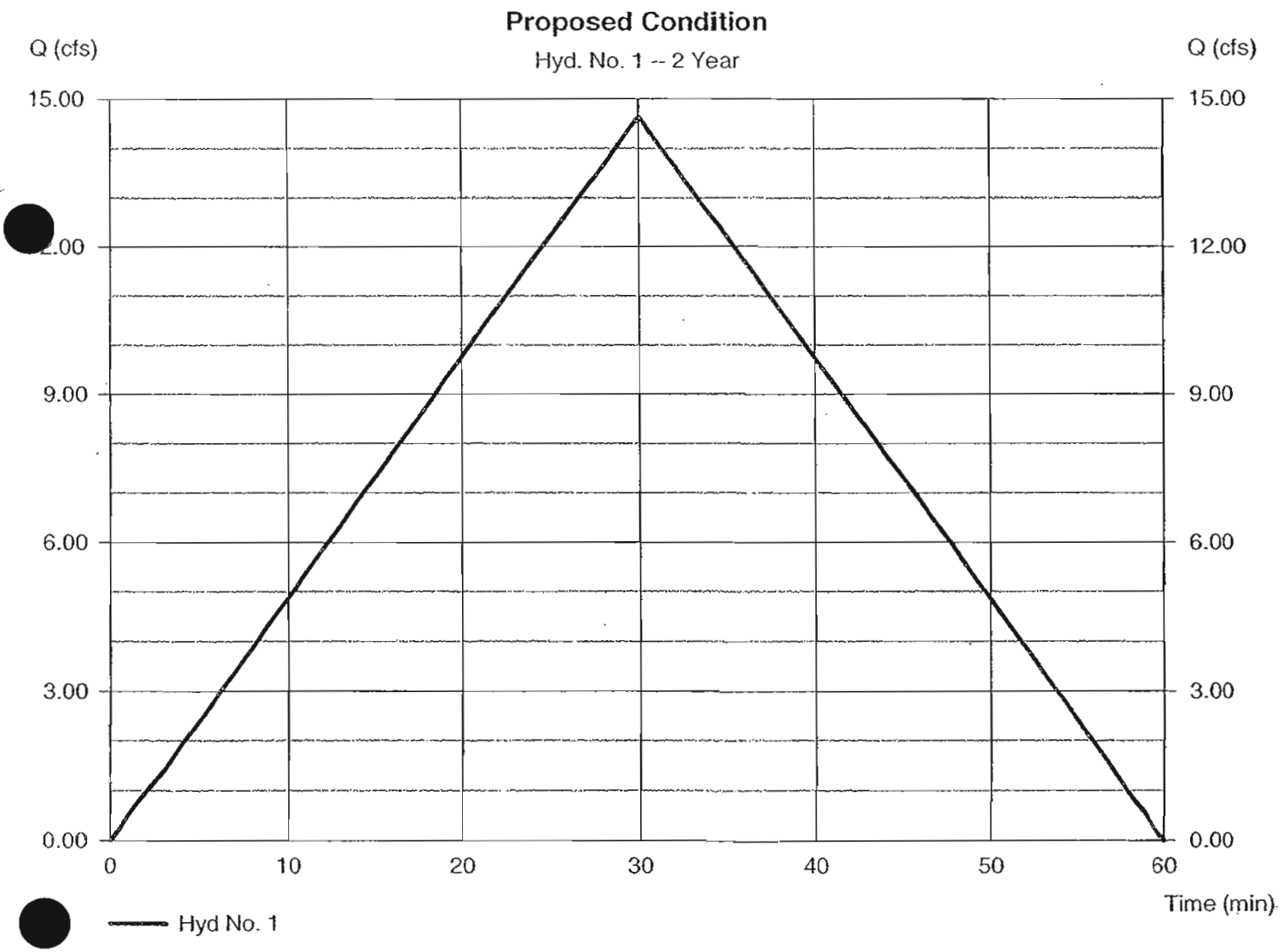

Hydrograph Report

Hydraflow Hydrographs by Intelisolve v9.02 — Monday, Aug 24, 2009

Hyd. No. 2

Pond Routing

Hydrograph type	= Reservoir	Peak discharge	= 1.389 cfs
Storm frequency	= 2 yrs	Time to peak	= 57 min
Time interval	= 1 min	Hyd. volume	= 24,975 cuft
Inflow hyd. No.	= 1 - Proposed Condition	Max. Elevation	= 97.24 ft
Reservoir name	= WQV	Max. Storage	= 23,274 cuft

Storage Indication method used.

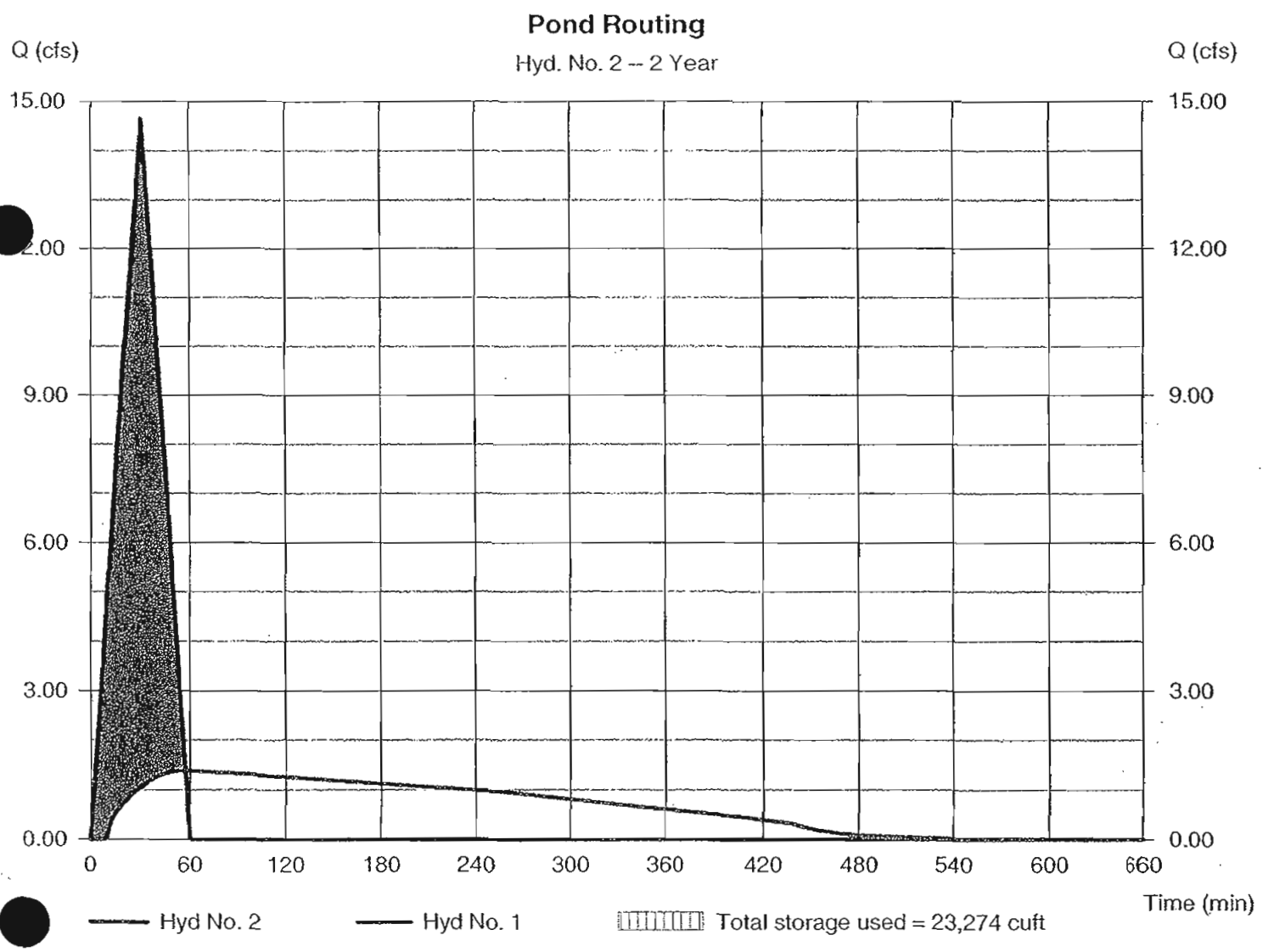

Pond Report

Hydraflow Hydrographs by Intelisolve v9.02 Monday, Aug 24, 2009

Pond No. 1 - WQV

Pond Data

Contours - User-defined contour areas. Conic method used for volume calculation. Begining Elevation = 94.00 ft

Stage / Storage Table

Stage (ft)	Elevation (ft)	Contour area (sqft)	Incr. Storage (cuft)	Total storage (cuft)
0.00	94.00	794	0	0
1.00	95.00	4,002	2,193	2,193
2.00	96.00	10,118	6,827	9,020
3.00	97.00	12,236	11,159	20,179
4.00	98.00	14,020	13,117	33,295
5.00	99.00	15,947	14,972	48,267
6.00	100.00	18,000	16,961	65,229

Culvert / Orifice Structures

	[A]	[B]	[C]	[PrfRsr]
Rise (in)	= 24.00	6.00	Inactive	Inactive
Span (in)	= 24.00	6.00	0.00	0.00
No. Barrels	= 1	1	1	0
Invert El. (ft)	= 94.60	94.61	0.00	0.00
Length (ft)	= 50.00	0.00	0.00	0.00
Slope (%)	= 0.50	0.00	0.00	n/a
N-Value	= .013	.013	.013	n/a
Orifice Coeff.	= 0.60	0.60	0.60	0.60
Multi-Stage	= n/a	Yes	No	No

Weir Structures

	[A]	[B]	[C]	[D]
Crest Len (ft)	= 10.00	Inactive	Inactive	Inactive
Crest El. (ft)	= 97.70	0.00	0.00	0.00
Weir Coeff.	= 3.33	3.33	3.33	3.33
Weir Type	= Rect	---	---	---
Multi-Stage	= Yes	No	No	No

Exfil.(in/hr) = 0.000 (by Contour)

TW Elev. (ft) = 94.36

Note: Culvert/Orifice outflows are analyzed under inlet and outlet control. Weir risers are checked for orifice conditions.

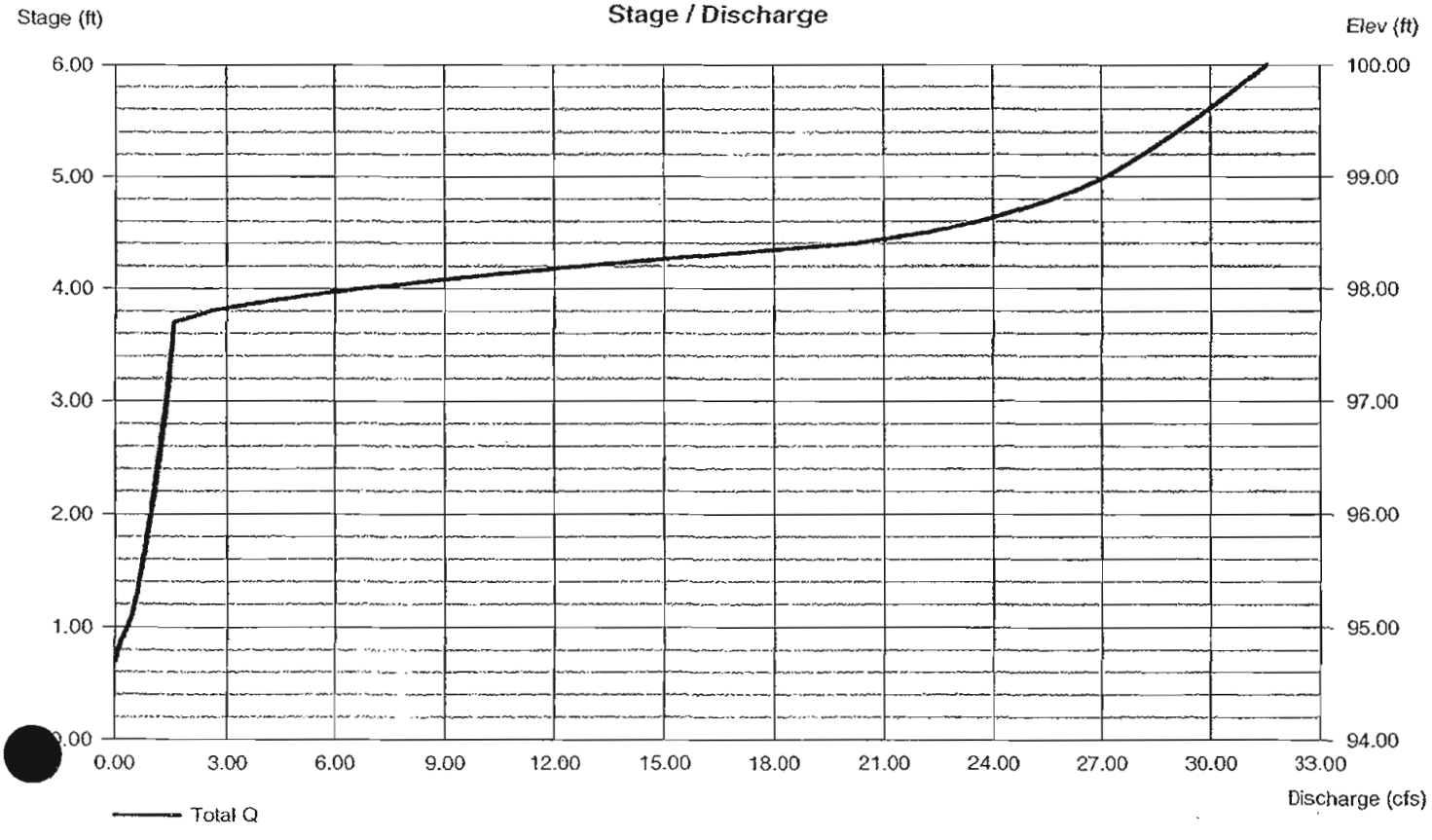

Hydrograph Summary Report

Hydraflow Hydrographs by Intelisolve v9.02

Hyd.	Hydrograph type (origin)	Peak flow (cfs)	Time interval (min)	Time to peak (min)	Hyd. volume (cuft)	Inflow hyd(s)	Maximum elevation (ft)	Total strge used (cuft)	Hydrograph description
1	Manual	21.57	1	30	38,801	----	------	-----	Proposed Condition
2	Reservoir	5.809	1	52	37,476	1	97.96	32,750	Pond Routing

Hydrograph Report

Hydraflow Hydrographs by Intelisolve v9.02 — Monday, Aug 24, 2009

Hyd. No. 1

Proposed Condition

Hydrograph type	= Manual	Peak discharge	= 21.57 cfs
Storm frequency	= 10 yrs	Time to peak	= 30 min
Time interval	= 1 min	Hyd. volume	= 38,801 cuft

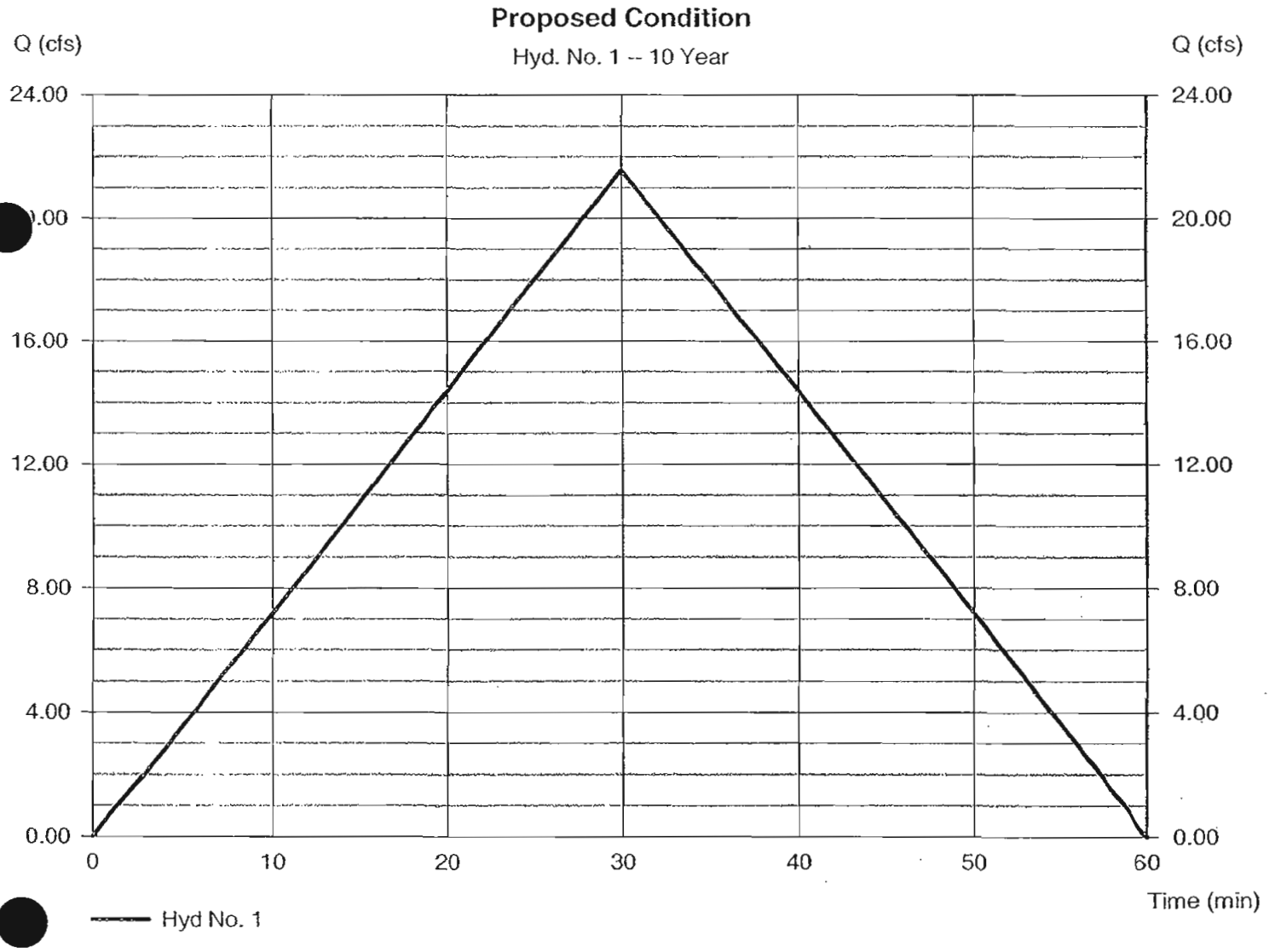

Hydrograph Report

Hydraflow Hydrographs by Intelisolve v9.02 — Monday, Aug 24, 2009

Hyd. No. 2

Pond Routing

Hydrograph type	= Reservoir	Peak discharge	= 5.809 cfs
Storm frequency	= 10 yrs	Time to peak	= 52 min
Time interval	= 1 min	Hyd. volume	= 37,476 cuft
Inflow hyd. No.	= 1 - Proposed Condition	Max. Elevation	= 97.96 ft
Reservoir name	= WQV	Max. Storage	= 32,750 cuft

Storage Indication method used.

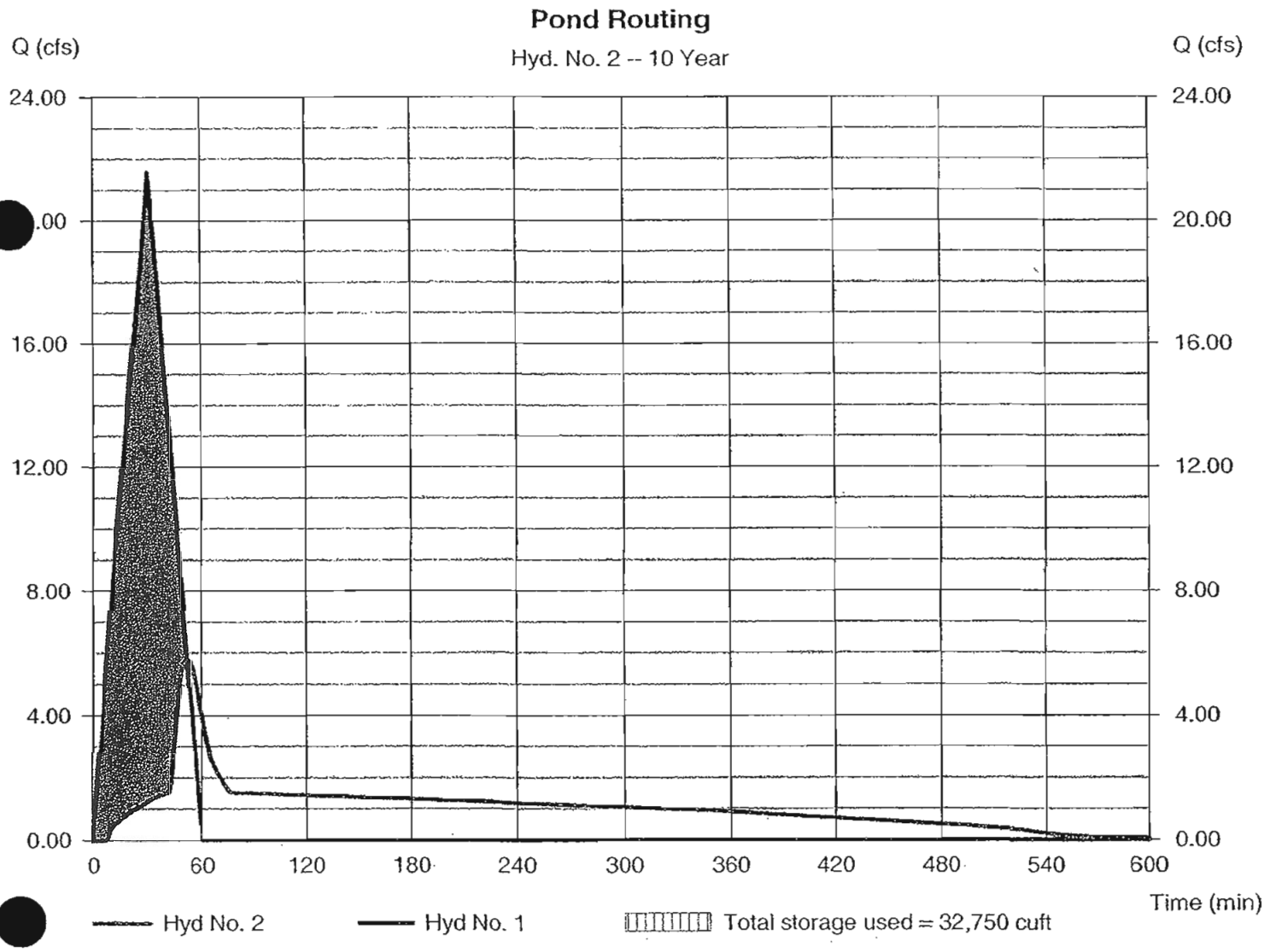

Pond Report

Hydraflow Hydrographs by Intelisolve v9.02 — Monday, Aug 24, 2009

Pond No. 1 - WQV

Pond Data

Contours - User-defined contour areas. Conic method used for volume calculation. Begining Elevation = 94.00 ft

Stage / Storage Table

Stage (ft)	Elevation (ft)	Contour area (sqft)	Incr. Storage (cuft)	Total storage (cuft)
0.00	94.00	794	0	0
1.00	95.00	4,002	2,193	2,193
2.00	96.00	10,118	6,827	9,020
3.00	97.00	12,236	11,159	20,179
4.00	98.00	14,020	13,117	33,295
5.00	99.00	15,947	14,972	48,267
6.00	100.00	18,000	16,961	65,229

Culvert / Orifice Structures

	[A]	[B]	[C]	[PrfRsr]
Rise (in)	= 24.00	6.00	Inactive	Inactive
Span (in)	= 24.00	6.00	0.00	0.00
No. Barrels	= 1	1	1	0
Invert El. (ft)	= 94.60	94.61	0.00	0.00
Length (ft)	= 50.00	0.00	0.00	0.00
Slope (%)	= 0.50	0.00	0.00	n/a
N-Value	= .013	.013	.013	n/a
Orifice Coeff.	= 0.60	0.60	0.60	0.60
Multi-Stage	= n/a	Yes	No	No

Weir Structures

	[A]	[B]	[C]	[D]
Crest Len (ft)	= 10.00	Inactive	Inactive	Inactive
Crest El. (ft)	= 97.70	0.00	0.00	0.00
Weir Coeff.	= 3.33	3.33	3.33	3.33
Weir Type	= Rect	---	---	---
Multi-Stage	= Yes	No	No	No

Exfil.(in/hr) = 0.000 (by Contour)
TW Elev. (ft) = 94.36

Note: Culvert/Orifice outflows are analyzed under inlet and outlet control. Weir risers are checked for orifice conditions.

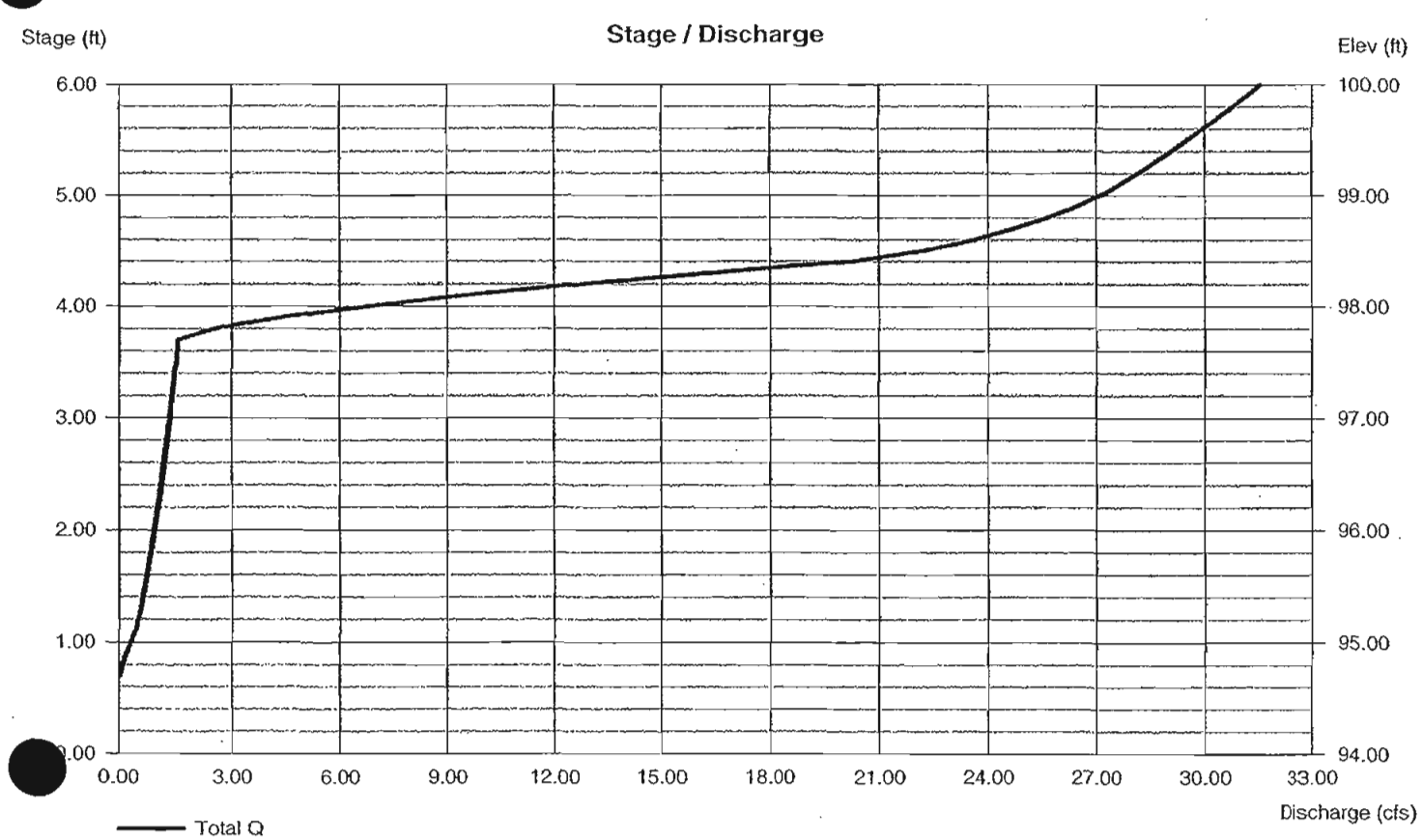

Hydrograph Summary Report

Hydraflow Hydrographs by Intelisolve v9.02

Hyd.	Hydrograph type (origin)	Peak flow (cfs)	Time interval (min)	Time to peak (min)	Hyd. volume (cuft)	Inflow hyd(s)	Maximum elevation (ft)	Total strge used (cuft)	Hydrograph description
1	Manual	39.48	1	30	70,960	---	-----	-----	Proposed Condition
2	Reservoir	23.56	1	42	69,635	1	98.60	42,219	Pond Routing

Hydrograph Report

Hydraflow Hydrographs by Intelisolve v9.02 — Monday, Aug 24, 2009

Hyd. No. 1

Proposed Condition

Hydrograph type	= Manual	Peak discharge	= 39.48 cfs
Storm frequency	= 100 yrs	Time to peak	= 30 min
Time interval	= 1 min	Hyd. volume	= 70,960 cuft

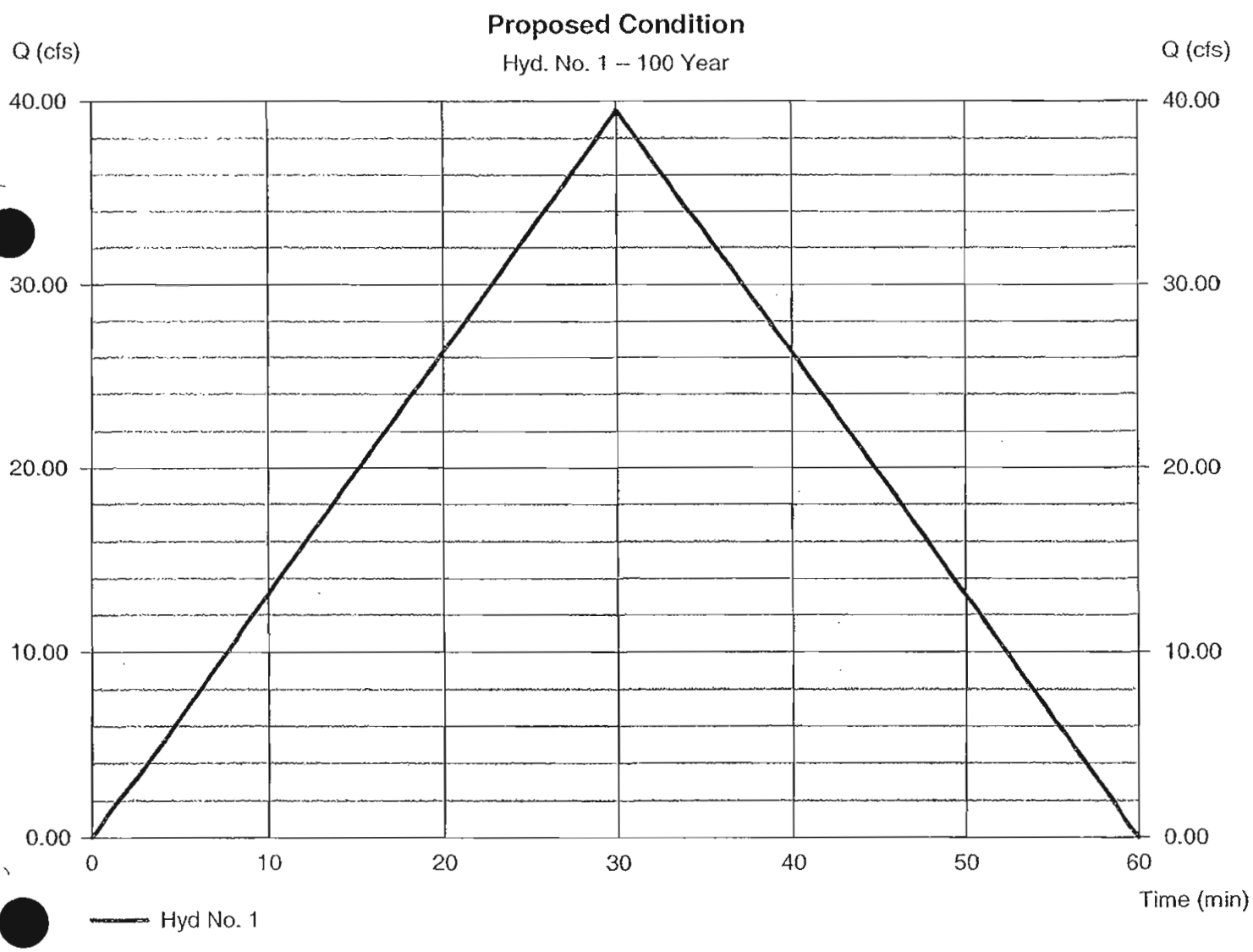

Hydrograph Report

Hydraflow Hydrographs by Intelisolve v9.02 — Monday, Aug 24, 2009

Hyd. No. 2

Pond Routing

Hydrograph type	= Reservoir	Peak discharge	= 23.56 cfs
Storm frequency	= 100 yrs	Time to peak	= 42 min
Time interval	= 1 min	Hyd. volume	= 69,635 cuft
Inflow hyd. No.	= 1 - Proposed Condition	Max. Elevation	= 98.60 ft
Reservoir name	= WQV	Max. Storage	= 42,219 cuft

Storage Indication method used.

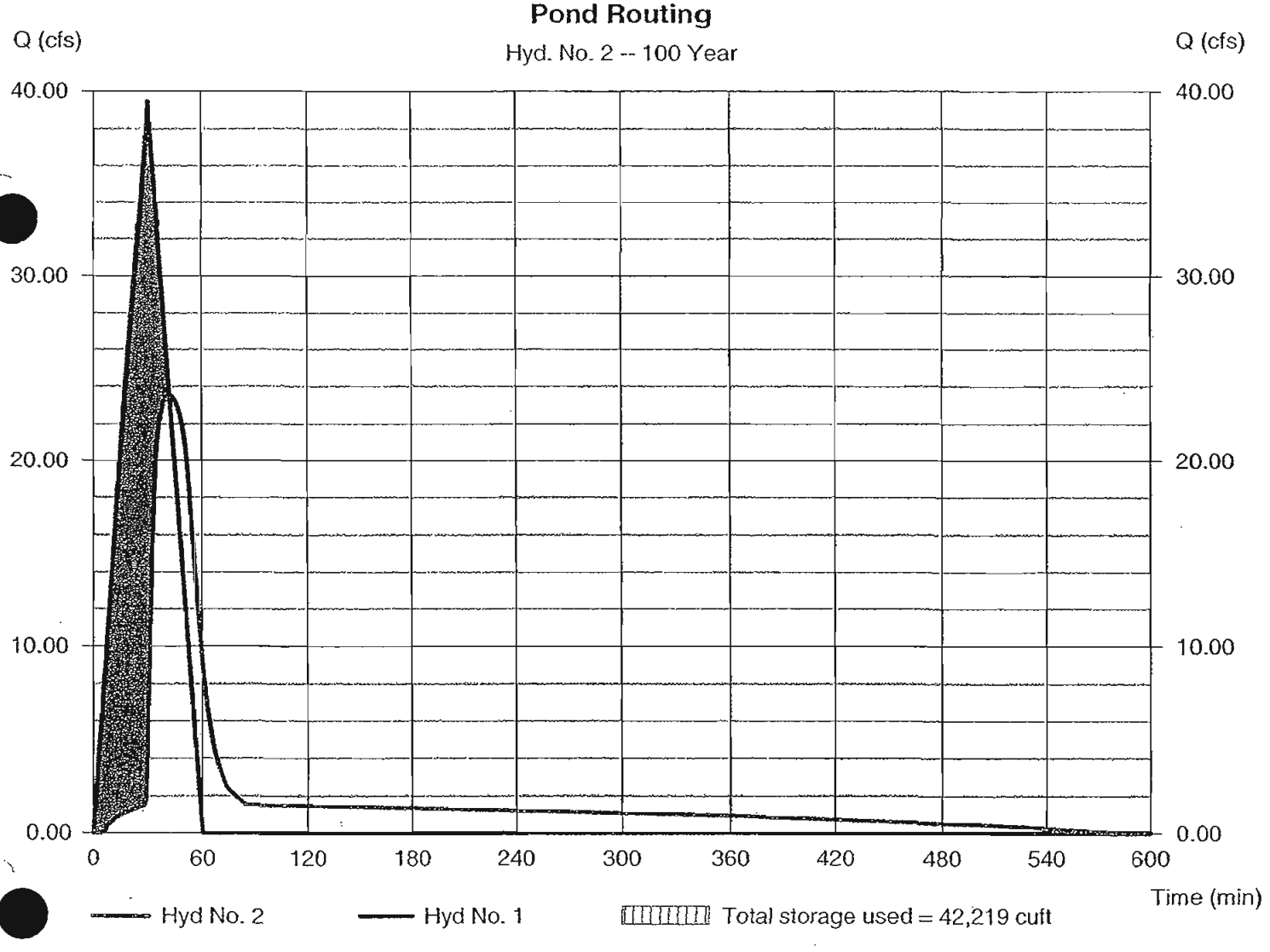

Pond Report

Hydraflow Hydrographs by Intelisolve v9.02 — Monday, Aug 24, 2009

Pond No. 1 - WQV

Pond Data

Contours - User-defined contour areas. Conic method used for volume calculation. *Begining Elevation = 94.00 ft*

Stage / Storage Table

Stage (ft)	Elevation (ft)	Contour area (sqft)	Incr. Storage (cuft)	Total storage (cuft)
0.00	94.00	794	0	0
1.00	95.00	4,002	2,193	2,193
2.00	96.00	10,118	6,827	9,020
3.00	97.00	12,236	11,159	20,179
4.00	98.00	14,020	13,117	33,295
5.00	99.00	15,947	14,972	48,267
6.00	100.00	18,000	16,961	65,229

Culvert / Orifice Structures

	[A]	[B]	[C]	[PrfRsr]
Rise (in)	= 24.00	6.00	Inactive	Inactive
Span (in)	= 24.00	6.00	0.00	0.00
No. Barrels	= 1	1	1	0
Invert El. (ft)	= 94.60	94.61	0.00	0.00
Length (ft)	= 50.00	0.00	0.00	0.00
Slope (%)	= 0.50	0.00	0.00	n/a
N-Value	= .013	.013	.013	n/a
Orifice Coeff.	= 0.60	0.60	0.60	0.60
Multi-Stage	= n/a	Yes	No	No

Weir Structures

	[A]	[B]	[C]	[D]
Crest Len (ft)	= 10.00	Inactive	Inactive	Inactive
Crest El. (ft)	= 97.70	0.00	0.00	0.00
Weir Coeff.	= 3.33	3.33	3.33	3.33
Weir Type	= Rect	---	---	---
Multi-Stage	= Yes	No	No	No

Exfil.(in/hr) = 0.000 (by Contour)

TW Elev. (ft) = 94.36

Note: Culvert/Orifice outflows are analyzed under inlet and outlet control. Weir risers are checked for orifice conditions.

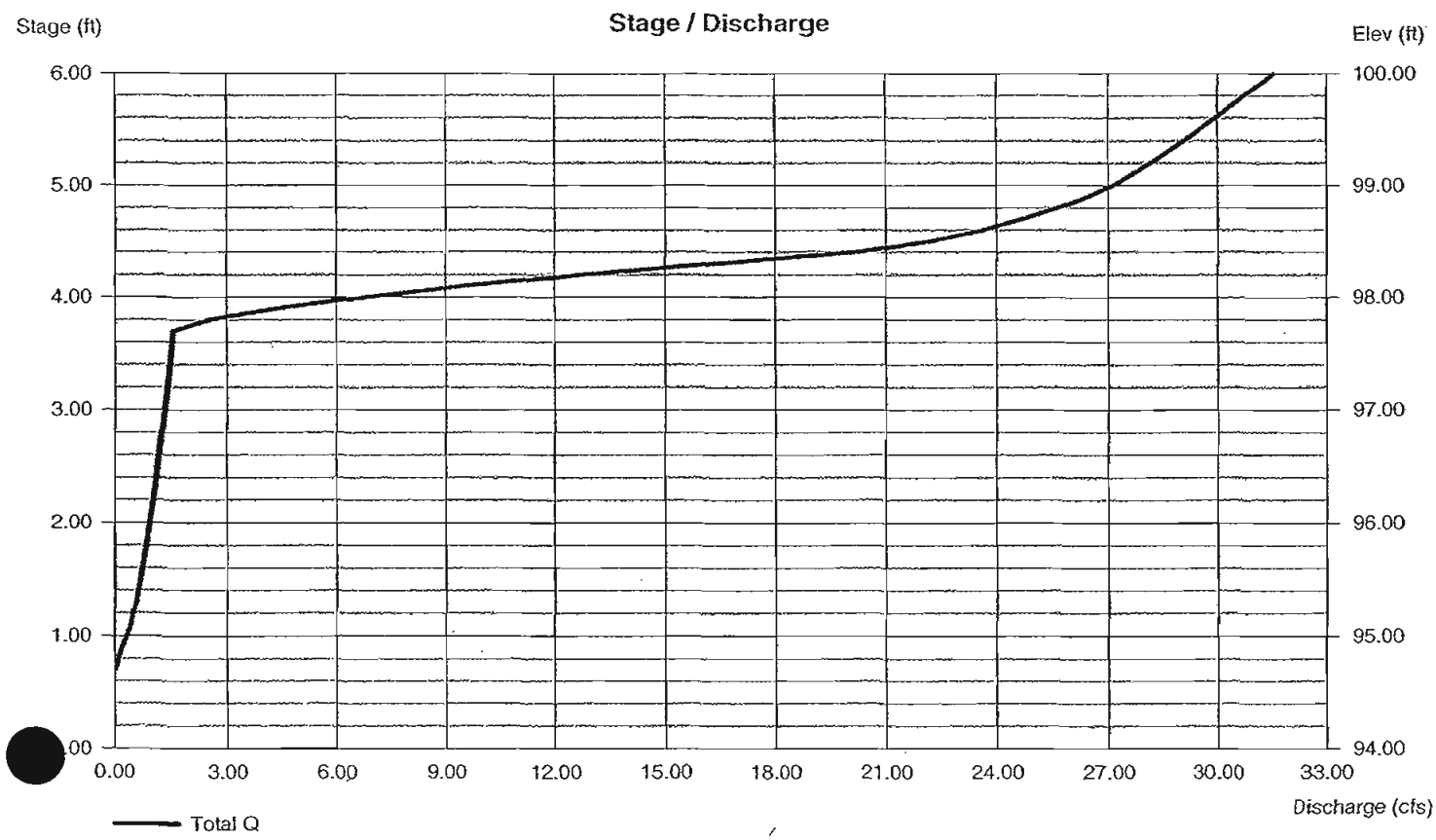

URS

Reference:

WATER QUALITY BASIN
BUSWAY DRAINAGE SYSTEM
Farmington Ave
Allen St
Washington St
Myrtle St
Columbus Blvd
Lake St
W Main St
Main St
Stanley St
East St
State Hwy 174
State Hwy 175
State Hwy 71
State Hwy 71A
State Hwy 372
John Downey Dr
Corbin Ave
Slater Rd
Pipe Brook
682800
683400
684000
684600
685200
685800
686400
687000
687600
688200
4618200
4617600
4617000
4616400
4615800
4615200
4614600
41° 41' 41"
41° 41' 36"
41° 39' 33"
41° 39' 28"
72° 48' 31"
72° 44' 14"
72° 48' 35"
72° 44' 19"
Map Scale: 1:28,300 if printed on A size (8.5" x 11") sheet.
Meters
0 350 700 1,400 2,100
Feet
0 1,500 3,000 6,000 9,000
N

MAP LEGEND

Area of Interest (AOI)

- Area of Interest (AOI)

Soils

- Soil Map Units

Soil Ratings

- 0 - 5
- 5 - 15
- 15 - 30
- 30 - 45
- 45 - 60
- Not rated or not available

Political Features

- Cities

Water Features

- Oceans
- Streams and Canals

Transportation

- Rails
- Interstate Highways
- US Routes
- Major Roads
- Local Roads

MAP INFORMATION

Map Scale: 1:28,300 if printed on A size (8.5" × 11") sheet.

The soil surveys that comprise your AOI were mapped at 1:12,000.

Please rely on the bar scale on each map sheet for accurate map measurements.

Source of Map: Natural Resources Conservation Service
Web Soil Survey URL: http://websoilsurvey.nrcs.usda.gov
Coordinate System: UTM Zone 18N NAD83

This product is generated from the USDA-NRCS certified data as of the version date(s) listed below.

Soil Survey Area: State of Connecticut
Survey Area Data: Version 6, Mar 22, 2007

Date(s) aerial images were photographed: 8/13/2006

The orthophoto or other base map on which the soil lines were compiled and digitized probably differs from the background imagery displayed on these maps. As a result, some minor shifting of map unit boundaries may be evident.

Representative Slope

Representative Slope—Summary by Map Unit—State of Connecticut				
Map unit symbol	Map unit name	Rating (percent)	Acres in AOI	Percent of AOI
5	Wilbraham silt loam	2.0	5.1	0.2%
6	Wilbraham and Menlo soils, extremely stony	2.0	5.7	0.2%
9	Scitico, Shaker, and Maybid soils	2.0	42.1	1.4%
20A	Ellington silt loam, 0 to 5 percent slopes	3.0	5.9	0.2%
26A	Berlin silt loam, 0 to 3 percent slopes	2.0	5.1	0.2%
30A	Branford silt loam, 0 to 3 percent slopes	2.0	2.7	0.1%
30B	Branford silt loam, 3 to 8 percent slopes	4.5	12.8	0.4%
33A	Hartford sandy loam, 0 to 3 percent slopes	2.0	8.4	0.3%
33B	Hartford sandy loam, 3 to 8 percent slopes	6.0	2.7	0.1%
37C	Manchester gravelly sandy loam, 3 to 15 percent slopes	9.0	2.5	0.1%
40A	Ludlow silt loam, 0 to 3 percent slopes	2.0	24.2	0.8%
40B	Ludlow silt loam, 3 to 8 percent slopes	6.0	13.4	0.4%
41B	Ludlow silt loam, 2 to 8 percent slopes, very stony	5.0	1.5	0.0%
63C	Cheshire fine sandy loam, 8 to 15 percent slopes	12.0	7.7	0.2%
77D	Cheshire-Holyoke complex, 15 to 35 percent slopes, very rocky	25.0	4.8	0.2%
78E	Holyoke-Rock outcrop complex, 15 to 45 percent slopes	30.0	2.9	0.1%
79E	Rock outcrop-Holyoke complex, 3 to 45 percent slopes	24.0	4.5	0.1%
87B	Wethersfield loam, 3 to 8 percent slopes	6.0	136.3	4.4%
87C	Wethersfield loam, 8 to 15 percent slopes	12.0	49.0	1.6%
87D	Wethersfield loam, 15 to 25 percent slopes	20.0	88.2	2.8%
89D	Wethersfield loam, 15 to 35 percent slopes, extremely stony	25.0	7.9	0.3%
107	Limerick and Lim soils	2.0	14.2	0.5%
109	Fluvaquents-Udifluvents complex, frequently flooded	1.0	4.2	0.1%
225B	Brancroft-Urban land complex, 0 to 8 percent slopes	4.0	24.0	0.8%

Representative Slope— Summary by Map Unit— State of Connecticut				
Map unit symbol	Map unit name	Rating (percent)	Acres in AOI	Percent of AOI
237C	Manchester-Urban land complex, 3 to 15 percent slopes	9.0	29.8	1.0%
240B	Ludlow-Urban land complex, 0 to 8 percent slopes	4.0	45.7	1.5%
263B	Cheshire-Urban land complex, 3 to 8 percent slopes	6.0	48.1	1.6%
269C	Yalesville-Urban land complex, 8 to 15 percent slopes	12.0	104.1	3.4%
287B	Wethersfield-Urban land complex, 3 to 8 percent slopes	6.0	820.2	26.5%
287C	Wethersfield-Urban land complex, 8 to 15 percent slopes	12.0	200.4	6.5%
287D	Wethersfield-Urban land complex, 15 to 25 percent slopes	20.0	100.8	3.2%
306	Udorthents-Urban land complex	18.0	770.6	24.9%
307	Urban land	23.0	371.4	12.0%
308	Udorthents, smoothed	18.0	133.7	4.3%
Totals for Area of Interest			**3,100.7**	**100.0%**

Description

Slope gradient is the difference in elevation between two points, expressed as a percentage of the distance between those points.

The slope gradient is actually recorded as three separate values in the database. A low value and a high value indicate the range of this attribute for the soil component. A "representative" value indicates the expected value of this attribute for the component. For this soil property, only the representative value is used.

Rating Options

Units of Measure: percent

Aggregation Method: Dominant Component

Component Percent Cutoff: *None Specified*

Tie-break Rule: Higher

Interpret Nulls as Zero: No

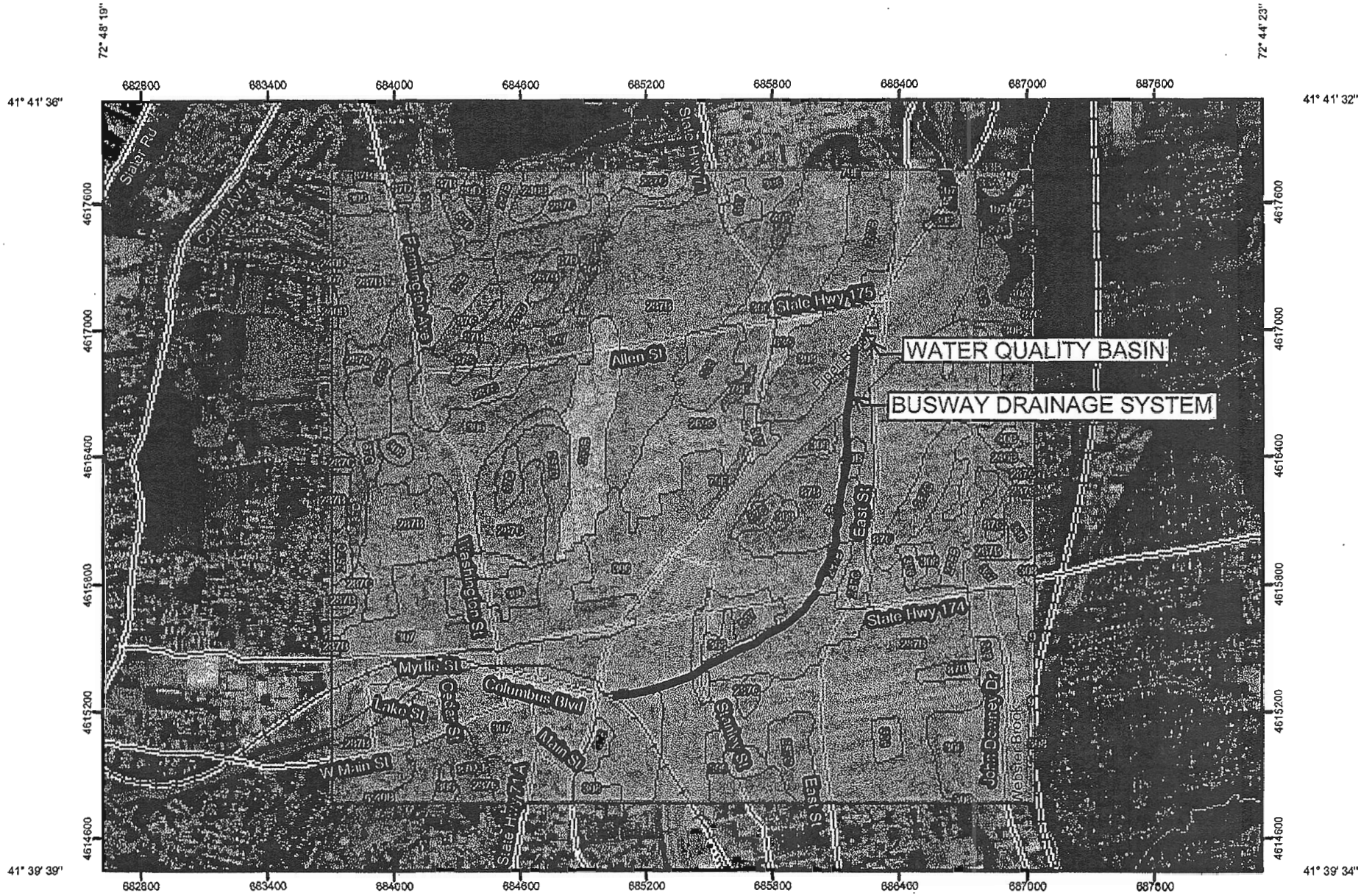

Map Scale: 1:26,100 if printed on A size (8.5" x 11") sheet.

N

Meters: 0 350 700 1,400 2,100

Feet: 0 1,000 2,000 4,000 6,000

MAP LEGEND

Area of Interest (AOI)

Area of Interest (AOI)

Soils

Soil Map Units

Soil Ratings

.02

.05

.10

.15

.17

.20

.24

.28

.32

.37

.43

.49

.55

.64

Not rated or not available

Political Features

Cities

Water Features

Oceans

Streams and Canals

Transportation

Rails

Interstate Highways

US Routes

Major Roads

Local Roads

MAP INFORMATION

Map Scale: 1:26,100 if printed on A size (8.5" × 11") sheet.

The soil surveys that comprise your AOI were mapped at 1:12,000.

Please rely on the bar scale on each map sheet for accurate map measurements.

Source of Map: Natural Resources Conservation Service
Web Soil Survey URL: http://websoilsurvey.nrcs.usda.gov
Coordinate System: UTM Zone 18N NAD83

This product is generated from the USDA-NRCS certified data as of the version date(s) listed below.

Soil Survey Area: State of Connecticut
Survey Area Data: Version 6, Mar 22, 2007

Date(s) aerial images were photographed: 8/13/2006

The orthophoto or other base map on which the soil lines were compiled and digitized probably differs from the background imagery displayed on these maps. As a result, some minor shifting of map unit boundaries may be evident.

K Factor, Whole Soil

K Factor, Whole Soil— Summary by Map Unit — State of Connecticut				
Map unit symbol	Map unit name	Rating	Acres in AOI	Percent of AOI
5	Wilbraham silt loam	.28	0.5	0.0%
9	Scitico, Shaker, and Maybid soils	.28	1.4	0.1%
26A	Berlin silt loam, 0 to 3 percent slopes	.28	5.1	0.2%
30A	Branford silt loam, 0 to 3 percent slopes	.43	0.0	0.0%
30B	Branford silt loam, 3 to 8 percent slopes	.43	11.9	0.5%
33A	Hartford sandy loam, 0 to 3 percent slopes	.20	3.7	0.2%
33B	Hartford sandy loam, 3 to 8 percent slopes	.20	1.2	0.1%
40A	Ludlow silt loam, 0 to 3 percent slopes	.28	9.9	0.4%
40B	Ludlow silt loam, 3 to 8 percent slopes	.28	11.5	0.5%
63C	Cheshire fine sandy loam, 8 to 15 percent slopes	.17	7.7	0.3%
77D	Cheshire-Holyoke complex, 15 to 35 percent slopes, very rocky	.17	4.8	0.2%
78E	Holyoke-Rock outcrop complex, 15 to 45 percent slopes		2.9	0.1%
79E	Rock outcrop-Holyoke complex, 3 to 45 percent slopes		3.3	0.1%
87B	Wethersfield loam, 3 to 8 percent slopes	.28	82.9	3.4%
87C	Wethersfield loam, 8 to 15 percent slopes	.28	30.4	1.2%
87D	Wethersfield loam, 15 to 25 percent slopes	.28	57.7	2.3%
89D	Wethersfield loam, 15 to 35 percent slopes, extremely stony		3.9	0.2%
107	Limerick and Lim soils	.49	10.2	0.4%
109	Fluvaquents-Udifluvents complex, frequently flooded	.32	4.2	0.2%
225B	Brancroft-Urban land complex, 0 to 8 percent slopes	.28	24.0	1.0%
237C	Manchester-Urban land complex, 3 to 15 percent slopes	.15	14.8	0.6%
240B	Ludlow-Urban land complex, 0 to 8 percent slopes	.28	20.7	0.8%
263B	Cheshire-Urban land complex, 3 to 8 percent slopes	.17	47.7	1.9%
269C	Yalesville-Urban land complex, 8 to 15 percent slopes	.24	99.8	4.1%
287B	Wethersfield-Urban land complex, 3 to 8 percent slopes	.28	656.0	26.7%

K Factor, Whole Soil—Summary by Map Unit—State of Connecticut				
Map unit symbol	Map unit name	Rating	Acres in AOI	Percent of AOI
287C	Wethersfield-Urban land complex, 8 to 15 percent slopes	.28	159.1	6.5%
287D	Wethersfield-Urban land complex, 15 to 25 percent slopes	.28	98.6	4.0%
306	Udorthents-Urban land complex	.28	664.6	27.1%
307	Urban land		314.1	12.8%
308	Udorthents, smoothed	.28	102.7	4.2%
Totals for Area of Interest			**2,455.5**	**100.0%**

Description

Erosion factor K indicates the susceptibility of a soil to sheet and rill erosion by water. Factor K is one of six factors used in the Universal Soil Loss Equation (USLE) and the Revised Universal Soil Loss Equation (RUSLE) to predict the average annual rate of soil loss by sheet and rill erosion in tons per acre per year. The estimates are based primarily on percentage of silt, sand, and organic matter and on soil structure and saturated hydraulic conductivity (Ksat). Values of K range from 0.02 to 0.69. Other factors being equal, the higher the value, the more susceptible the soil is to sheet and rill erosion by water.

"Erosion factor Kw (whole soil)" indicates the erodibility of the whole soil. The estimates are modified by the presence of rock fragments.

Rating Options

Aggregation Method: Dominant Condition

Component Percent Cutoff: *None Specified*

Tie-break Rule: Higher

Layer Options: Surface Layer

10 year EI, US
59.8
yr 24-hr rainfall, in.
4.7
Annual precip, in.
47
Avg. temp., deg F
24.5 26.9 36.4 47.4 58.1 66.9 72.1 70.3 62.3 51.5 41.7 29.7
EI dist. for Req conditions
req
Eros. density, US eros. / in. ppt
1.70 1.58 2.21 2.55 3.60 4.67 6.36 5.49 4.31 3.30 2.42 1.82
How determine runoff?
based on 10-yr 24-hr ppt
How get erosivity distribution?
From monthly eros. density & precip.
In Req area?
No
Month precip., in.
3.60 3.32 3.84 4.20 4.33 4.00 3.70 3.90 3.97 3.90 4.26 4.04
R Equiv, US
157
R Factor, US
157
R values, US
6.1 5.2 8.5 11 16 19 24 21 17 13 10 7.3
Standard EI distribution
US_114
e frozen/thawing soil routines?
o

slope length and steepness are known, this combined LS factor can be determined from Figure A3.

The cover and management factor, C, is the ratio of soil loss from land use under specified conditions to that from continuously fallow and tilled land. The USLE was developed for use on agricultural fields. It is adapted to use in nonagricultural conditions by appropriate selection of the C factor. This is often done by relating the land use conditions to some agricultural situation. For example, a firing range with a grass cover might be assumed to be similar to a pasture. Annual values of C for various cover and management conditions applicable to Army land uses are presented in Table A1.

Table A1 Cover management, "C" factors for permanent pasture, rangeland, and idle land.

Vegetal Canopy		Cover That Contacts the Surface						
Type and Height of Raised Canopy[2]	Canopy Covers[3] %	Type[4]	Percent Ground Cover 0	20	40	60	80	95-100
No appreciable canopy		G	.45	.20	.10	.042	.013	.003
		W	.45	.24	.15	.090	.043	.011
Canopy of tall weeds or short brush, 0.5 m (1.6 ft.) fall ht.	25	G	.36	.17	.09	.038	.012	.003
		W	.36	.20	.13	.082	.041	.011
	50	G	.26	.13	.07	.035	.012	.003
		W	.26	.16	.11	.075	.039	.011
	75	G	.17	.10	.06	.031	.011	.003
		W	.17	.12	.09	.068	.038	.011
Appreciable brush or bushes, 2 m 6.6 ft. fall ht.	25	G	.40	.18	.09	.040	.013	.003
		W	.40	.22	.14	.085	.042	.011
	50	G	.34	.16	.085	.038	.012	.003
		W	.34	.19	.13	.081	.041	.011
	75	G	.28	.14	.08	.036	.012	.003
		W	.28	.17	.12	.077	.040	.011
Trees but no appreciable, low brush , 4 m (13.1 ft.) fall ht.	25	G	.42	.19	.10	.041	.013	.003
		W	.42	.23	.14	.087	.042	.011
	50	G	.39	.18	.09	.040	.013	.003
		W	.39	.21	.14	.085	.042	.011
	75	G	.36	.17	.09	.039	.012	.003
		W	.36	.20	.13	.083	.041	.011

[1]All values shown assume: (1) random distribution of mulch or vegetation, and (2) mulch of appreciable depth where it exists. Idle land refers to land with undisturbed profiles for at least a period of three consecutive years.
[2]Average fall height of waterdrops from canopy to soil surface.
[3]Portion of total-area surface that would be hidden from view by canopy in a vertical projection (a birds's-eye view).
[4]G: Cover at surface is grass, grasslike plants, decaying compacted duff, or litter at least 2 inches deep. W: Cover at surface is mostly broadleaf herbaceous plants (as weeds with little lateral-root network near the surface, and/or undecayed residue).

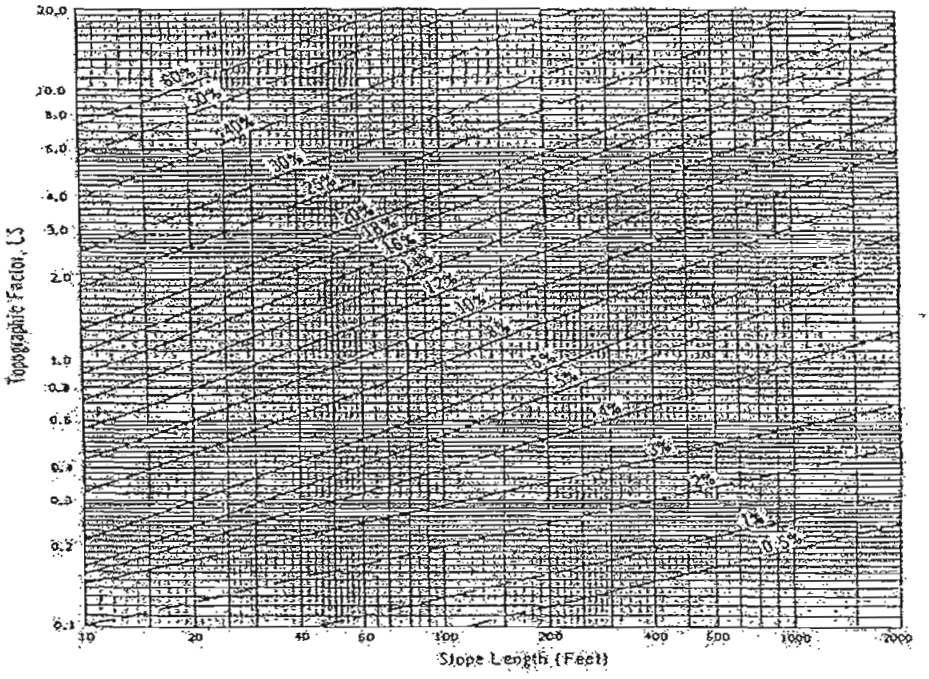

Figure A3. Topographic LS factor

Appendix J

Channel & Ditch Design

P:\Transportation\Drainage\Final Design\Swale Design\CH-10YR.LST

```
          ******  HYCHL  ****** (Version 6.1) ******          Date 08-23-2009
 Commands Read From File: ch-10yr.chl

       JOB CHANNEL-1-STA.21+00-28+25LT- 10 YEAR STORM
       UNI 0
 ** UNITS PARAMETER = 0 (ENGLISH)
       CHL 0.005 7.50
       TRP 6 3 4
 ** LEFT SIDE SLOPE    3.0 AND RIGHT SIDE SLOPE    4.0
 ** THE BASE WIDTH OF THE TRAPEZOID (ft)    6.00
       LVG C
       END
***************END OF COMMAND FILE************

 CHANNEL-1-STA.21+00-28+25LT- 10 YEAR STORM
 ------------
 INPUT REVIEW
 ------------
   DESIGN PARAMETERS:
       DESIGN DISCHARGE (ft^3/s):            7.50
       CHANNEL SHAPE:                  TRAPEZOIDAL
       CHANNEL SLOPE (ft/ft):               .005
 ----------------------------------------
 HYDRAULIC CALCULATIONS USING NORMAL DEPTH
 ----------------------------------------

                          DESIGN     MAXIMUM
                          ------     -------
 FLOW (cfs)                 7.50      154.79
 DEPTH (ft)                 1.05        3.21
 AREA (ft^2)               10.12       55.19
 WETTED PERIMETER (ft)     13.63       29.35
 HYDRAULIC RADIUS (ft)       .74        1.88
 VELOCITY (ft/s)             .74        2.80
 MANNINGS N (LOW FLOW)       .116        .057

 ------------------
 STABILITY ANALYSIS
 ------------------

                       LINING       PERMIS SHR   CALC. SHR  STAB.
     CONDITION         TYPE         (lb/ft^2)    (lb/ft^2)  FACTOR   REMARKS
     ---------         ---------    ----------   ---------  ------   -------
 LOW FLOW LINING
   BOTTOM; STRAIGHT   VEGETATIVE  C       1.00        .33      3.06   STABLE

 *** NORMAL END OF HYCHL ***
```

P:\Transportation\Drainage\Final Design\Swale Design\CH-2YR.LST

```
          ******  HYCHL  ****** (Version 6.1) ******          Date 08-23-2009
 Commands Read From File: ch-2yr.chl

       JOB CHANNEL-1-STA.21+00-28+25LT- 2 YEAR STORM FOR TEMPORARY LINEING
       UNI 0
 ** UNITS PARAMETER = 0 (ENGLISH)
       CHL 0.005 5.63
       TRP 6 3 4
 ** LEFT SIDE SLOPE    3.0 AND RIGHT SIDE SLOPE    4.0
 ** THE BASE WIDTH OF THE TRAPEZOID (ft)    6.00
       LTM 1
       END
***************END OF COMMAND FILE************

 CHANNEL-1-STA.21+00-28+25LT- 2 YEAR STORM FOR TEMPORARY LINEING
 ------------
 INPUT REVIEW
 ------------
   DESIGN PARAMETERS:
       DESIGN DISCHARGE (ft^3/s):            5.63
       CHANNEL SHAPE:                  TRAPEZOIDAL
       CHANNEL SLOPE (ft/ft):               .005
 ----------------------------------------
 HYDRAULIC CALCULATIONS USING NORMAL DEPTH
 ----------------------------------------

                          DESIGN     MAXIMUM
                          ------     -------
 FLOW (cfs)                 5.63       15.37
 DEPTH (ft)                  .28         .48
 AREA (ft^2)                1.92        3.69
 WETTED PERIMETER (ft)      8.01        9.50
 HYDRAULIC RADIUS (ft)       .24         .39
 VELOCITY (ft/s)            2.94        4.16
 MANNINGS N (LOW FLOW)       .014        .013

 ------------------
 STABILITY ANALYSIS
 ------------------

                      LINING       PERMIS SHR   CALC. SHR  STAB.
     CONDITION        TYPE         (lb/ft^2)    (lb/ft^2)  FACTOR   REMARKS
     ---------        ---------    ----------   ---------  ------   -------
 LOW FLOW LINING
   BOTTOM; STRAIGHT   WOVEN PAPER NET      .15        .09      1.75   STABLE

 *** NORMAL END OF HYCHL ***
```

P:\Transportation\Drainage\Final Design\Swale Design\D1-10YR.LST

```
          ******  HYCHL  ****** (Version 6.1) ******          Date 09-02-2009
 Commands Read From File: d1-10yr.chl

       JOB DITCH-2-STA.27+00-28+50RT -10 YEAR STORM
       UNI 0
 ** UNITS PARAMETER = 0 (ENGLISH)
       CHL 0.005 0.20
       VSH 2 2
 ** V-SHAPE RIGHT Z1 =  2.0  AND LEFT Z2 =  2.0
       LVG E
       END
***************END OF COMMAND FILE************

 DITCH-2-STA.27+00-28+50RT -10 YEAR STORM
 ------------
 INPUT REVIEW
 ------------
   DESIGN PARAMETERS:
       DESIGN DISCHARGE (ft^3/s):              .20
       CHANNEL SHAPE:                   VSHAPED
       CHANNEL SLOPE (ft/ft):                .005
 ----------------------------------------
 HYDRAULIC CALCULATIONS USING NORMAL DEPTH
 ----------------------------------------

                          DESIGN     MAXIMUM
                          ------     -------
 FLOW (cfs)                  .20       2.05
 DEPTH (ft)                  .65       1.12
 AREA (ft^2)                 .83       2.52
 WETTED PERIMETER (ft)      2.89       5.02
 HYDRAULIC RADIUS (ft)       .29        .50
 VELOCITY (ft/s)             .24        .81
 MANNINGS N (LOW FLOW)       .192       .081

 ------------------
 STABILITY ANALYSIS
 ------------------

                      LINING       PERMIS SHR   CALC. SHR  STAB.
     CONDITION        TYPE         (lb/ft^2)    (lb/ft^2)  FACTOR   REMARKS
     ---------        ---------    ----------   ---------  ------   -------
 LOW FLOW LINING
   BOTTOM; STRAIGHT   VEGETATIVE  E        .35       .20      1.74   STABLE

 *** NORMAL END OF HYCHL ***
```

P:\Transportation\Drainage\Final Design\Swale Design\D1-2YR.LST

```
          ******  HYCHL  ****** (Version 6.1) ******          Date 09-01-2009
 Commands Read From File: d1-2yr.chl

       JOB DITCH-1-STA.27+00-28+50RT FOR TEMPORARY LINE-2 YEAR STORM
       UNI 0
 ** UNITS PARAMETER = 0 (ENGLISH)
       CHL 0.005 0.30
       VSH 2 2
 ** V-SHAPE RIGHT Z1 =  2.0  AND LEFT Z2 =  2.0
       LTM 1
       END
***************END OF COMMAND FILE************

 DITCH-1-STA.27+00-28+50RT FOR TEMPORARY LINE-2 YEAR STORM
 ------------
 INPUT REVIEW
 ------------
   DESIGN PARAMETERS:
       DESIGN DISCHARGE (ft^3/s):              .30
       CHANNEL SHAPE:                   VSHAPED
       CHANNEL SLOPE (ft/ft):                .005
 ----------------------------------------
 HYDRAULIC CALCULATIONS USING NORMAL DEPTH
 ----------------------------------------

                          DESIGN     MAXIMUM
                          ------     -------
 FLOW (cfs)                  .30       1.25
 DEPTH (ft)                  .29        .48
 AREA (ft^2)                 .16        .46
 WETTED PERIMETER (ft)      1.28       2.15
 HYDRAULIC RADIUS (ft)       .13        .22
 VELOCITY (ft/s)            1.83       2.71
 MANNINGS N (LOW FLOW)       .015       .014

 ------------------
 STABILITY ANALYSIS
 ------------------

                      LINING       PERMIS SHR   CALC. SHR  STAB.
     CONDITION        TYPE         (lb/ft^2)    (lb/ft^2)  FACTOR   REMARKS
     ---------        ---------    ----------   ---------  ------   -------
 LOW FLOW LINING
   BOTTOM; STRAIGHT   WOVEN PAPER NET      .15        .09      1.68   STABLE

 *** NORMAL END OF HYCHL ***
```

```
P:\Transportation\Drainage\Final Design\Swale Design\D2-10YR.LST

          ******  HYCHL  ****** (Version 6.1) ******          Date 09-01-2009
   □□□□□□□□□□□□□□□□□□□□□□□□□□□□□□□□□□□□□□□□□□□□□□□□□□□□□□□□□□□□□□□□□□□□□□□□
 Commands Read From File: d2-10yr.chl

       JOB DITCH-2-STA.21+53-27+00RT -10 YEAR STORM
       UNI 0
 ** UNITS PARAMETER = 0 (ENGLISH)
       CHL 0.005 1.24
       VSH 2 2
 ** V-SHAPE RIGHT Z1 =  2.0  AND LEFT Z2 =  2.0
       LVG C
       END
***************END OF COMMAND FILE************

 DITCH-2-STA.21+53-27+00RT -10 YEAR STORM
 ------------
 INPUT REVIEW
 ------------
   DESIGN PARAMETERS:
       DESIGN DISCHARGE (ft^3/s):            1.24
       CHANNEL SHAPE:                      VSHAPED
       CHANNEL SLOPE (ft/ft):               .005
 -----------------------------------------
 HYDRAULIC CALCULATIONS USING NORMAL DEPTH
 -----------------------------------------

                         DESIGN     MAXIMUM
                         ------     -------
 FLOW (cfs)               1.24       41.80
 DEPTH (ft)               1.27        3.21
 AREA (ft^2)              3.21       20.55
 WETTED PERIMETER (ft)    5.66       14.33
 HYDRAULIC RADIUS (ft)     .57        1.43
 VELOCITY (ft/s)           .39        2.03
 MANNINGS N (LOW FLOW)     .186        .066

 ------------------
 STABILITY ANALYSIS
 ------------------

                       LINING       PERMIS SHR   CALC. SHR  STAB.
     CONDITION         TYPE         (lb/ft^2)    (lb/ft^2)  FACTOR   REMARKS
     ---------         ---------    ----------   ---------  ------   -------
 LOW FLOW LINING
   BOTTOM; STRAIGHT  VEGETATIVE  C      1.00         .40      2.53   STABLE

 *** NORMAL END OF HYCHL ***
```

P:\Transportation\Drainage\Final Design\Swale Design\D2-2YR.LST

```
          ****** HYCHL ****** (Version 6.1) ******          Date 09-01-2009
   □□□□□□□□□□□□□□□□□□□□□□□□□□□□□□□□□□□□□□□□□□□□□□□□□□□□□□□□□□□□□□□□□□□□□□
 Commands Read From File: d2-2yr.chl

       JOB DITCH-2-STA.21+53-27+00RT FOR TEMPORARY LINE-2 YEAR STORM
       UNI 0
 ** UNITS PARAMETER = 0 (ENGLISH)
       CHL 0.005 0.93
       VSH 2 2
 ** V-SHAPE RIGHT Z1 =  2.0  AND LEFT Z2 =  2.0
       LTM 1
       END
***************END OF COMMAND FILE************

 DITCH-2-STA.21+53-27+00RT FOR TEMPORARY LINE-2 YEAR STORM
 ------------
 INPUT REVIEW
 ------------
   DESIGN PARAMETERS:
       DESIGN DISCHARGE (ft^3/s):             .93
       CHANNEL SHAPE:                      VSHAPED
       CHANNEL SLOPE (ft/ft):                .005
 -----------------------------------------
 HYDRAULIC CALCULATIONS USING NORMAL DEPTH
 -----------------------------------------

                          DESIGN     MAXIMUM
                          ------     -------
 FLOW (cfs)                  .93        1.25
 DEPTH (ft)                  .43         .48
 AREA (ft^2)                 .37         .46
 WETTED PERIMETER (ft)      1.93        2.15
 HYDRAULIC RADIUS (ft)       .19         .22
 VELOCITY (ft/s)            2.50        2.71
 MANNINGS N (LOW FLOW)       .014        .014

 ------------------
 STABILITY ANALYSIS
 ------------------

                        LINING       PERMIS SHR   CALC. SHR  STAB.
     CONDITION          TYPE         (lb/ft^2)    (lb/ft^2)  FACTOR   REMARKS
     ---------          ---------    ----------   ---------  ------   -------
 LOW FLOW LINING
   BOTTOM; STRAIGHT   WOVEN PAPER NET      .15         .13      1.11   STABLE

 *** NORMAL END OF HYCHL ***
```

P:\Transportation\Drainage\Final Design\Swale Design\D3A-10YR.LST

```
          ******  HYCHL  ****** (Version 6.1) ******           Date 08-23-2009
   □□□□□□□□□□□□□□□□□□□□□□□□□□□□□□□□□□□□□□□□□□□□□□□□□□□□□□□□□□□□□□□□□□□□□□□□□□□□□□□□□□□□□
 Commands Read From File: d3a-10yr.chl

       JOB DITCH-3A-STA.37+20-STA.44+00LT -10 YEAR STORM
       UNI 0
 ** UNITS PARAMETER = 0 (ENGLISH)
       CHL 0.015 1.68
       TRP 2 2 3
 ** LEFT SIDE SLOPE    2.0 AND RIGHT SIDE SLOPE    3.0
 ** THE BASE WIDTH OF THE TRAPEZOID (ft)    2.00
       LVG C
       END
***************END OF COMMAND FILE************

 DITCH-3A-STA.37+20-STA.44+00LT -10 YEAR STORM
 ------------
 INPUT REVIEW
 ------------
   DESIGN PARAMETERS:
       DESIGN DISCHARGE (ft^3/s):           1.68
       CHANNEL SHAPE:                 TRAPEZOIDAL
       CHANNEL SLOPE (ft/ft):              .015

 *** WARNING:  DEPTH DID NOT CONVERGE. PROGRAM WILL CONTINUE
                 WITH MOST RECENT VALUE
 -----------------------------------------
 HYDRAULIC CALCULATIONS USING NORMAL DEPTH
 -----------------------------------------

                          DESIGN     MAXIMUM
                          ------     -------
 FLOW (cfs)                 1.68        7.45
 DEPTH (ft)                  .67        1.07
 AREA (ft^2)                2.47        4.99
 WETTED PERIMETER (ft)      5.62        7.77
 HYDRAULIC RADIUS (ft)       .44         .64
 VELOCITY (ft/s)             .68        1.49
 MANNINGS N (LOW FLOW)       .155        .091

 ------------------
 STABILITY ANALYSIS
 ------------------

                        LINING       PERMIS SHR   CALC. SHR  STAB.
     CONDITION          TYPE         (lb/ft^2)    (lb/ft^2)  FACTOR    REMARKS
     ---------          ---------    ----------   ---------  ------    -------
 LOW FLOW LINING
   BOTTOM; STRAIGHT   VEGETATIVE  C       1.00        .63      1.59    STABLE

 *** NORMAL END OF HYCHL ***
```

```
P:\Transportation\Drainage\Final Design\Swale Design\D3A-2YR.LST

          ******  HYCHL  ****** (Version 6.1) ******          Date 08-23-2009
   □□□□□□□□□□□□□□□□□□□□□□□□□□□□□□□□□□□□□□□□□□□□□□□□□□□□□□□□□□□□□□□□□□□□
 Commands Read From File: d3a-2yr.chl

       JOB DITCH-3A-STA.37+20-STA.44+00LT -2 YEAR STORM TEMPORARY
       UNI 0
 ** UNITS PARAMETER = 0 (ENGLISH)
       CHL 0.015 1.26
       TRP 2 2 3
 ** LEFT SIDE SLOPE    2.0 AND RIGHT SIDE SLOPE    3.0
 ** THE BASE WIDTH OF THE TRAPEZOID (ft)    2.00
       LTM 1
       END
***************END OF COMMAND FILE************

 DITCH-3A-STA.37+20-STA.44+00LT -2 YEAR STORM TEMPORARY
 ------------
 INPUT REVIEW
 ------------
   DESIGN PARAMETERS:
       DESIGN DISCHARGE (ft^3/s):            1.26
       CHANNEL SHAPE:                   TRAPEZOIDAL
       CHANNEL SLOPE (ft/ft):              .015
 -----------------------------------------
 HYDRAULIC CALCULATIONS USING NORMAL DEPTH
 -----------------------------------------

                          DESIGN     MAXIMUM
                          ------     -------
 FLOW (cfs)                 1.26        1.27
 DEPTH (ft)                  .16         .16
 AREA (ft^2)                 .38         .38
 WETTED PERIMETER (ft)      2.86        2.87
 HYDRAULIC RADIUS (ft)       .13         .13
 VELOCITY (ft/s)            3.29        3.30
 MANNINGS N (LOW FLOW)       .014        .014

 ------------------
 STABILITY ANALYSIS
 ------------------

                      LINING       PERMIS SHR   CALC. SHR  STAB.
    CONDITION         TYPE         (lb/ft^2)    (lb/ft^2)  FACTOR   REMARKS
    ---------         ---------    ----------   ---------  ------   -------
 LOW FLOW LINING
   BOTTOM; STRAIGHT  WOVEN PAPER NET      .15         .15      1.00   STABLE

 *** NORMAL END OF HYCHL ***
```

P:\Transportation\Drainage\Final Design\Swale Design\D3B-10YR.LST

```
          ******  HYCHL  ****** (Version 6.1) ******           Date 08-23-2009
Commands Read From File: d3b-10yr.chl

      JOB DITCH-5B-STA.44+00-STA.49+00LT -10 YEAR STORM
      UNI 0
** UNITS PARAMETER = 0 (ENGLISH)
      CHL 0.008 1.27
      TRP 2 1.5 3
** LEFT SIDE SLOPE    1.5 AND RIGHT SIDE SLOPE    3.0
** THE BASE WIDTH OF THE TRAPEZOID (ft)    2.00
      LVG C
      END
***************END OF COMMAND FILE************

DITCH-5B-STA.44+00-STA.49+00LT -10 YEAR STORM
------------
INPUT REVIEW
------------
  DESIGN PARAMETERS:
      DESIGN DISCHARGE (ft^3/s):          1.27
      CHANNEL SHAPE:                 TRAPEZOIDAL
      CHANNEL SLOPE (ft/ft):              .008

*** WARNING:  DEPTH DID NOT CONVERGE. PROGRAM WILL CONTINUE
                WITH MOST RECENT VALUE
-----------------------------------------
HYDRAULIC CALCULATIONS USING NORMAL DEPTH
-----------------------------------------
```

	DESIGN	MAXIMUM
FLOW (cfs)	1.27	26.23
DEPTH (ft)	.77	2.00
AREA (ft^2)	2.84	13.04
WETTED PERIMETER (ft)	5.80	11.95
HYDRAULIC RADIUS (ft)	.49	1.09
VELOCITY (ft/s)	.45	2.01
MANNINGS N (LOW FLOW)	.185	.070

STABILITY ANALYSIS

CONDITION	LINING TYPE	PERMIS SHR (lb/ft^2)	CALC. SHR (lb/ft^2)	STAB. FACTOR	REMARKS
LOW FLOW LINING					
BOTTOM; STRAIGHT	VEGETATIVE C	1.00	.38	2.62	STABLE

*** NORMAL END OF HYCHL ***

```
P:\Transportation\Drainage\Final Design\Swale Design\D3B-2YR.LST

          ******  HYCHL  ****** (Version 6.1) ******            Date 08-23-2009
   □□□□□□□□□□□□□□□□□□□□□□□□□□□□□□□□□□□□□□□□□□□□□□□□□□□□□□□□□□□□□□□□□□□□
 Commands Read From File: d3b-2yr.chl

       JOB D3B-STA.44+00-STA.49+00LT -2 YEAR STORM TEMPORARY
       UNI 0
 ** UNITS PARAMETER = 0 (ENGLISH)
       CHL 0.008 0.953
       TRP 2 1.5 3
 ** LEFT SIDE SLOPE    1.5 AND RIGHT SIDE SLOPE    3.0
 ** THE BASE WIDTH OF THE TRAPEZOID (ft)    2.00
       LTM 1
       END
***************END OF COMMAND FILE************

 D3B-STA.44+00-STA.49+00LT -2 YEAR STORM TEMPORARY
 ------------
 INPUT REVIEW
 ------------
   DESIGN PARAMETERS:
       DESIGN DISCHARGE (ft^3/s):           .95
       CHANNEL SHAPE:                TRAPEZOIDAL
       CHANNEL SLOPE (ft/ft):              .008
 -----------------------------------------
 HYDRAULIC CALCULATIONS USING NORMAL DEPTH
 -----------------------------------------

                          DESIGN     MAXIMUM
                          ------     -------
 FLOW (cfs)                  .95        2.90
 DEPTH (ft)                  .16         .30
 AREA (ft^2)                 .39         .80
 WETTED PERIMETER (ft)      2.81        3.49
 HYDRAULIC RADIUS (ft)       .14         .23
 VELOCITY (ft/s)            2.46        3.61
 MANNINGS N (LOW FLOW)       .014        .014

 ------------------
 STABILITY ANALYSIS
 ------------------

                      LINING        PERMIS SHR   CALC. SHR  STAB.
     CONDITION        TYPE          (lb/ft^2)    (lb/ft^2)  FACTOR    REMARKS
     ---------        ---------     ----------   ---------  ------    -------
 LOW FLOW LINING
   BOTTOM; STRAIGHT  WOVEN PAPER NET      .15         .08      1.83   STABLE

 *** NORMAL END OF HYCHL ***
```

P:\Transportation\Drainage\Final Design\Swale Design\D3C-10YR.LST

```
        ******  HYCHL  ****** (Version 6.1) ******          Date 08-23-2009
 Commands Read From File: d3c-10yr.chl

      JOB DITCH-3C-STA.49+00-STA.52+50LT -10 YEAR STORM
      UNI 0
 ** UNITS PARAMETER = 0 (ENGLISH)
      CHL 0.009 2.11
      TRP 2 2 3
 ** LEFT SIDE SLOPE    2.0 AND RIGHT SIDE SLOPE    3.0
 ** THE BASE WIDTH OF THE TRAPEZOID (ft)    2.00
      LVG C
      END
***************END OF COMMAND FILE************

 DITCH-3C-STA.49+00-STA.52+50LT -10 YEAR STORM
 ------------
 INPUT REVIEW
 ------------
   DESIGN PARAMETERS:
      DESIGN DISCHARGE (ft^3/s):            2.11
      CHANNEL SHAPE:                  TRAPEZOIDAL
      CHANNEL SLOPE (ft/ft):               .009

 *** WARNING:  DEPTH DID NOT CONVERGE. PROGRAM WILL CONTINUE
                WITH MOST RECENT VALUE
 ----------------------------------------
 HYDRAULIC CALCULATIONS USING NORMAL DEPTH
 ----------------------------------------

                          DESIGN     MAXIMUM
                          ------     -------
 FLOW (cfs)                 2.11       22.08
 DEPTH (ft)                  .84        1.78
 AREA (ft^2)                3.42       11.49
 WETTED PERIMETER (ft)      6.51       11.61
 HYDRAULIC RADIUS (ft)       .53         .99
 VELOCITY (ft/s)             .62        1.92
 MANNINGS N (LOW FLOW)       .149        .073

 ------------------
 STABILITY ANALYSIS
 ------------------

                      LINING       PERMIS SHR   CALC. SHR  STAB.
     CONDITION        TYPE         (lb/ft^2)    (lb/ft^2)  FACTOR   REMARKS
     ---------        ---------    ----------   ---------  ------   -------
 LOW FLOW LINING
   BOTTOM; STRAIGHT   VEGETATIVE  C       1.00       .47      2.13   STABLE

 *** NORMAL END OF HYCHL ***
```

P:\Transportation\Drainage\Final Design\Swale Design\D3C-2YR.LST

```
          ******  HYCHL  ****** (Version 6.1) ******          Date 08-23-2009
 Commands Read From File: d3c-2yr.chl

       JOB DITCH-3C-STA.49+00-STA.52+50LT -2 YEAR STORM TEMPORARY
       UNI 0
 ** UNITS PARAMETER = 0 (ENGLISH)
       CHL 0.009 1.58
       TRP 2 2 3
 ** LEFT SIDE SLOPE    2.0 AND RIGHT SIDE SLOPE    3.0
 ** THE BASE WIDTH OF THE TRAPEZOID (ft)    2.00
       LTM 1
       END
***************END OF COMMAND FILE************

 DITCH-3C-STA.49+00-STA.52+50LT -2 YEAR STORM TEMPORARY
 ------------
 INPUT REVIEW
 ------------
   DESIGN PARAMETERS:
       DESIGN DISCHARGE (ft^3/s):            1.58
       CHANNEL SHAPE:                   TRAPEZOIDAL
       CHANNEL SLOPE (ft/ft):               .009
 ----------------------------------------
 HYDRAULIC CALCULATIONS USING NORMAL DEPTH
 ----------------------------------------

                          DESIGN     MAXIMUM
                          ------     -------
 FLOW (cfs)                 1.58        2.52
 DEPTH (ft)                  .21         .27
 AREA (ft^2)                 .52         .71
 WETTED PERIMETER (ft)      3.12        3.44
 HYDRAULIC RADIUS (ft)       .17         .21
 VELOCITY (ft/s)            3.02        3.54
 MANNINGS N (LOW FLOW)       .014        .014

 ------------------
 STABILITY ANALYSIS
 ------------------

                       LINING       PERMIS SHR   CALC. SHR  STAB.
     CONDITION         TYPE         (lb/ft^2)    (lb/ft^2)  FACTOR   REMARKS
     ---------         ---------    ----------   ---------  ------   -------
 LOW FLOW LINING
   BOTTOM; STRAIGHT   WOVEN PAPER NET      .15        .12      1.29   STABLE

 *** NORMAL END OF HYCHL ***
```

P:\Transportation\Drainage\Final Design\Swale Design\D3D-10YR.LST

```
          ******  HYCHL  ****** (Version 6.1) ******            Date 08-23-2009
 Commands Read From File: d3d-10yr.chl

       JOB DITCH-3D-STA.52+50-STA.55+25LT -10 YEAR STORM
       UNI 0
 ** UNITS PARAMETER = 0 (ENGLISH)
       CHL 0.0055 1.82
       TRP 2 1.5 3
 ** LEFT SIDE SLOPE    1.5 AND RIGHT SIDE SLOPE    3.0
 ** THE BASE WIDTH OF THE TRAPEZOID (ft)    2.00
       LVG C
       END
***************END OF COMMAND FILE************

 DITCH-3D-STA.52+50-STA.55+25LT -10 YEAR STORM
 ------------
 INPUT REVIEW
 ------------
   DESIGN PARAMETERS:
       DESIGN DISCHARGE (ft^3/s):            1.82
       CHANNEL SHAPE:                   TRAPEZOIDAL
       CHANNEL SLOPE (ft/ft):                .005

 *** WARNING:  DEPTH DID NOT CONVERGE. PROGRAM WILL CONTINUE
                 WITH MOST RECENT VALUE
 ----------------------------------------
 HYDRAULIC CALCULATIONS USING NORMAL DEPTH
 ----------------------------------------

                          DESIGN     MAXIMUM
                          ------     -------
 FLOW (cfs)                 1.82       58.03
 DEPTH (ft)                  .95        2.91
 AREA (ft^2)                3.88       24.93
 WETTED PERIMETER (ft)      6.68       16.47
 HYDRAULIC RADIUS (ft)       .58        1.51
 VELOCITY (ft/s)             .47        2.33
 MANNINGS N (LOW FLOW)       .165        .062

 ------------------
 STABILITY ANALYSIS
 ------------------

                       LINING       PERMIS SHR   CALC. SHR  STAB.
     CONDITION         TYPE         (lb/ft^2)    (lb/ft^2)  FACTOR   REMARKS
     ---------         ---------    ----------   ---------  ------   -------
 LOW FLOW LINING
   BOTTOM; STRAIGHT   VEGETATIVE  C       1.00        .32      3.08   STABLE

 *** NORMAL END OF HYCHL ***
```

P:\Transportation\Drainage\Final Design\Swale Design\D3D-2YR.LST

```
          ******  HYCHL  ****** (Version 6.1) ******          Date 08-23-2009
 Commands Read From File: d3d-2yr.chl

       JOB DITCH-3D-STA.52+50-STA.55+25LT -2 YEAR STORM TEMPORARY
       UNI 0
 ** UNITS PARAMETER = 0 (ENGLISH)
       CHL 0.0055 1.37
       TRP 2 1.5 3
 ** LEFT SIDE SLOPE    1.5 AND RIGHT SIDE SLOPE    3.0
 ** THE BASE WIDTH OF THE TRAPEZOID (ft)    2.00
       LTM 1
       END
***************END OF COMMAND FILE************

 DITCH-3D-STA.52+50-STA.55+25LT -2 YEAR STORM TEMPORARY
 ------------
 INPUT REVIEW
 ------------
   DESIGN PARAMETERS:
       DESIGN DISCHARGE (ft^3/s):            1.37
       CHANNEL SHAPE:                  TRAPEZOIDAL
       CHANNEL SLOPE (ft/ft):               .005
 ----------------------------------------
 HYDRAULIC CALCULATIONS USING NORMAL DEPTH
 ----------------------------------------

                          DESIGN     MAXIMUM
                          ------     -------
 FLOW (cfs)                 1.37        4.87
 DEPTH (ft)                  .22         .44
 AREA (ft^2)                 .55        1.30
 WETTED PERIMETER (ft)      3.10        4.17
 HYDRAULIC RADIUS (ft)       .18         .31
 VELOCITY (ft/s)            2.48        3.74
 MANNINGS N (LOW FLOW)       .014        .014

 ------------------
 STABILITY ANALYSIS
 ------------------

                      LINING       PERMIS SHR   CALC. SHR  STAB.
     CONDITION        TYPE         (lb/ft^2)    (lb/ft^2)  FACTOR   REMARKS
     ---------        ---------    ----------   ---------  ------   -------
 LOW FLOW LINING
   BOTTOM; STRAIGHT   WOVEN PAPER NET      .15        .08      1.97   STABLE

 *** NORMAL END OF HYCHL ***
```

P:\Transportation\Drainage\Final Design\Swale Design\D3DN-10Y.LST

```
          ******  HYCHL  ****** (Version 6.1) ******          Date 12-09-2009
  □□□□□□□□□□□□□□□□□□□□□□□□□□□□□□□□□□□□□□□□□□□□□□□□□□□□□□□□□□□□□□□□□□□□□□□□
 Commands Read From File: D3DN-10Y.CHL

       JOB DITCH-3D-STA.54+00-STA.55+50LT -10 YEAR STORM
       UNI 0
 ** UNITS PARAMETER = 0 (ENGLISH)
       CHL 0.005 0.85
       TRP 2 2 3
 ** LEFT SIDE SLOPE    2.0 AND RIGHT SIDE SLOPE    3.0
 ** THE BASE WIDTH OF THE TRAPEZOID (ft)    2.00
       LVG C
       END
***************END OF COMMAND FILE************

 DITCH-3D-STA.54+00-STA.55+50LT -10 YEAR STORM
 ------------
 INPUT REVIEW
 ------------
   DESIGN PARAMETERS:
       DESIGN DISCHARGE (ft^3/s):             .85
       CHANNEL SHAPE:                  TRAPEZOIDAL
       CHANNEL SLOPE (ft/ft):               .005
 -----------------------------------------
 HYDRAULIC CALCULATIONS USING NORMAL DEPTH
 -----------------------------------------

                            DESIGN     MAXIMUM
                            ------     -------
 FLOW (cfs)                    .85       78.15
 DEPTH (ft)                    .80        3.21
 AREA (ft^2)                  3.20       32.09
 WETTED PERIMETER (ft)        6.32       19.30
 HYDRAULIC RADIUS (ft)         .51        1.66
 VELOCITY (ft/s)               .27        2.44
 MANNINGS N (LOW FLOW)         .252        .061

 ------------------
 STABILITY ANALYSIS
 ------------------

                      LINING       PERMIS SHR   CALC. SHR  STAB.
     CONDITION        TYPE         (lb/ft^2)    (lb/ft^2)  FACTOR    REMARKS
     ---------        ---------    ----------   ---------  ------    -------
 LOW FLOW LINING
   BOTTOM; STRAIGHT  VEGETATIVE  C       1.00         .25      4.00    STABLE

 *** NORMAL END OF HYCHL ***
```

P:\Transportation\Drainage\Final Design\Swale Design\D3DN-2Y.LST

```
          ******  HYCHL  ****** (Version 6.1) ******           Date 12-09-2009
   □□□□□□□□□□□□□□□□□□□□□□□□□□□□□□□□□□□□□□□□□□□□□□□□□□□□□□□□□□□□□□□□□□□□□
 Commands Read From File: D3DN-2Y.CHL

       JOB DITCH-3D-STA.54+00-STA.55+50LT -2 YEAR STORM TEMPORARY
       UNI 0
 ** UNITS PARAMETER = 0 (ENGLISH)
       CHL 0.005 0.69
       TRP 2 2 3
 ** LEFT SIDE SLOPE    2.0 AND RIGHT SIDE SLOPE    3.0
 ** THE BASE WIDTH OF THE TRAPEZOID (ft)    2.00
       LTM 1
       END
***************END OF COMMAND FILE************

 DITCH-3D-STA.54+00-STA.55+50LT -2 YEAR STORM TEMPORARY
 ------------
 INPUT REVIEW
 ------------
   DESIGN PARAMETERS:
       DESIGN DISCHARGE (ft^3/s):              .69
       CHANNEL SHAPE:                    TRAPEZOIDAL
       CHANNEL SLOPE (ft/ft):                .005
 -----------------------------------------
 HYDRAULIC CALCULATIONS USING NORMAL DEPTH
 -----------------------------------------

                          DESIGN     MAXIMUM
                          ------     -------
 FLOW (cfs)                  .69       5.76
 DEPTH (ft)                  .16        .48
 AREA (ft^2)                 .37       1.54
 WETTED PERIMETER (ft)      2.84       4.60
 HYDRAULIC RADIUS (ft)       .13        .33
 VELOCITY (ft/s)            1.86       3.74
 MANNINGS N (LOW FLOW)       .015       .014

 ------------------
 STABILITY ANALYSIS
 ------------------

                    LINING       PERMIS SHR   CALC. SHR  STAB.
    CONDITION       TYPE         (lb/ft^2)    (lb/ft^2)  FACTOR   REMARKS
    ---------       ---------    ----------   ---------  ------   -------
 LOW FLOW LINING
   BOTTOM; STRAIGHT  WOVEN PAPER NET   .15       .05      3.10    STABLE

 *** NORMAL END OF HYCHL ***
```

P:\Transportation\Drainage\Final Design\Swale Design\D3DS-10Y.LST

```
          ****** HYCHL ****** (Version 6.1) ******          Date 12-09-2009
 Commands Read From File: D3DS-10Y.CHL

       JOB DITCH-3D-STA.52+50-STA.54+00LT -10 YEAR STORM
       UNI 0
 ** UNITS PARAMETER = 0 (ENGLISH)
       CHL 0.005 0.85
       TRP 2 2 3
 ** LEFT SIDE SLOPE    2.0 AND RIGHT SIDE SLOPE    3.0
 ** THE BASE WIDTH OF THE TRAPEZOID (ft)    2.00
       LVG C
       END
***************END OF COMMAND FILE************

 DITCH-3D-STA.52+50-STA.54+00LT -10 YEAR STORM
 ------------
 INPUT REVIEW
 ------------
   DESIGN PARAMETERS:
       DESIGN DISCHARGE (ft^3/s):            .85
       CHANNEL SHAPE:                  TRAPEZOIDAL
       CHANNEL SLOPE (ft/ft):              .005
 -----------------------------------------
 HYDRAULIC CALCULATIONS USING NORMAL DEPTH
 -----------------------------------------

                          DESIGN     MAXIMUM
                          ------     -------
 FLOW (cfs)                  .85       78.15
 DEPTH (ft)                  .80        3.21
 AREA (ft^2)                3.20       32.09
 WETTED PERIMETER (ft)      6.32       19.30
 HYDRAULIC RADIUS (ft)       .51        1.66
 VELOCITY (ft/s)             .27        2.44
 MANNINGS N (LOW FLOW)       .252        .061

 ------------------
 STABILITY ANALYSIS
 ------------------

                        LINING        PERMIS SHR   CALC. SHR  STAB.
    CONDITION           TYPE          (lb/ft^2)    (lb/ft^2)  FACTOR   REMARKS
    ---------           ---------     ----------   ---------  ------   -------
 LOW FLOW LINING
   BOTTOM; STRAIGHT   VEGETATIVE  C       1.00         .25      4.00   STABLE

 *** NORMAL END OF HYCHL ***
```

P:\Transportation\Drainage\Final Design\Swale Design\D3DS-2Y.LST

****** HYCHL ****** (Version 6.1) ****** Date 12-09-2009

□□

Commands Read From File: D3DS-2Y.CHL

```
      JOB DITCH-3D-STA.52+50-STA.54+00LT -2 YEAR STORM TEMPORARY
      UNI 0
** UNITS PARAMETER = 0 (ENGLISH)
      CHL 0.005 0.69
      TRP 2 2 3
** LEFT SIDE SLOPE    2.0 AND RIGHT SIDE SLOPE    3.0
** THE BASE WIDTH OF THE TRAPEZOID (ft)    2.00
      LTM 1
      END
***************END OF COMMAND FILE************
```

DITCH-3D-STA.52+50-STA.54+00LT -2 YEAR STORM TEMPORARY

INPUT REVIEW

DESIGN PARAMETERS:

DESIGN DISCHARGE (ft^3/s):	.69
CHANNEL SHAPE:	TRAPEZOIDAL
CHANNEL SLOPE (ft/ft):	.005

HYDRAULIC CALCULATIONS USING NORMAL DEPTH

	DESIGN	MAXIMUM
FLOW (cfs)	.69	5.76
DEPTH (ft)	.16	.48
AREA (ft^2)	.37	1.54
WETTED PERIMETER (ft)	2.84	4.60
HYDRAULIC RADIUS (ft)	.13	.33
VELOCITY (ft/s)	1.86	3.74
MANNINGS N (LOW FLOW)	.015	.014

STABILITY ANALYSIS

CONDITION	LINING TYPE	PERMIS SHR (lb/ft^2)	CALC. SHR (lb/ft^2)	STAB. FACTOR	REMARKS
LOW FLOW LINING BOTTOM; STRAIGHT	WOVEN PAPER NET	.15	.05	3.10	STABLE

*** NORMAL END OF HYCHL ***

P:\Transportation\Drainage\Final Design\Swale Design\D4A-10YR.LST

```
        ******  HYCHL  ****** (Version 6.1) ******          Date 08-23-2009
 Commands Read From File: d4a-10yr.chl

      JOB DITCH-4A-STA.58+00-STA.60+50LT -10 YEAR STORM
      UNI 0
 ** UNITS PARAMETER = 0 (ENGLISH)
      CHL 0.009 1.68
      VSH 2 2
 ** V-SHAPE RIGHT Z1 =  2.0  AND LEFT Z2 =  2.0
      LVG C
      END
***************END OF COMMAND FILE************

 DITCH-4A-STA.58+00-STA.60+50LT -10 YEAR STORM
 ------------
 INPUT REVIEW
 ------------
   DESIGN PARAMETERS:
      DESIGN DISCHARGE (ft^3/s):            1.68
      CHANNEL SHAPE:                   VSHAPED
      CHANNEL SLOPE (ft/ft):               .009
 ----------------------------------------
 HYDRAULIC CALCULATIONS USING NORMAL DEPTH
 ----------------------------------------

                          DESIGN     MAXIMUM
                          ------     -------
 FLOW (cfs)                 1.68        8.83
 DEPTH (ft)                 1.17        1.78
 AREA (ft^2)                2.75        6.34
 WETTED PERIMETER (ft)      5.24        7.96
 HYDRAULIC RADIUS (ft)       .52         .80
 VELOCITY (ft/s)             .61        1.39
 MANNINGS N (LOW FLOW)       .150        .087

 ------------------
 STABILITY ANALYSIS
 ------------------

                      LINING       PERMIS SHR   CALC. SHR  STAB.
    CONDITION         TYPE         (lb/ft^2)    (lb/ft^2)  FACTOR   REMARKS
    ---------         ---------    ----------   ---------  ------   -------
 LOW FLOW LINING
   BOTTOM; STRAIGHT   VEGETATIVE  C       1.00       .66      1.52   STABLE

 *** NORMAL END OF HYCHL ***
```

P:\Transportation\Drainage\Final Design\Swale Design\D4A-2YR.LST

```
          ******  HYCHL  ****** (Version 6.1) ******          Date 08-23-2009
 Commands Read From File: d4a-2yr.chl

       JOB DITCH-4A-STA.58+00-STA.60+50LT -2 YEAR STORM
       UNI 0
 ** UNITS PARAMETER = 0 (ENGLISH)
       CHL 0.009 1.26
       VSH 2 2
 ** V-SHAPE RIGHT Z1 =  2.0  AND LEFT Z2 =  2.0
       LTM 2
       END
***************END OF COMMAND FILE************

 DITCH-4A-STA.58+00-STA.60+50LT -2 YEAR STORM
 ------------
 INPUT REVIEW
 ------------
   DESIGN PARAMETERS:
       DESIGN DISCHARGE (ft^3/s):            1.26
       CHANNEL SHAPE:                   VSHAPED
       CHANNEL SLOPE (ft/ft):               .009
 ----------------------------------------
 HYDRAULIC CALCULATIONS USING NORMAL DEPTH
 ----------------------------------------

                          DESIGN     MAXIMUM
                          ------     -------
 FLOW (cfs)                 1.26        3.55
 DEPTH (ft)                  .56         .80
 AREA (ft^2)                 .63        1.28
 WETTED PERIMETER (ft)      2.52        3.58
 HYDRAULIC RADIUS (ft)       .25         .36
 VELOCITY (ft/s)            1.99        2.76
 MANNINGS N (LOW FLOW)       .028        .026

 ------------------
 STABILITY ANALYSIS
 ------------------

                      LINING       PERMIS SHR   CALC. SHR  STAB.
     CONDITION        TYPE         (lb/ft^2)    (lb/ft^2)  FACTOR   REMARKS
     ---------        ---------    ----------   ---------  ------   -------
 LOW FLOW LINING
   BOTTOM; STRAIGHT   JUTE NET            .45        .32      1.42   STABLE

 *** NORMAL END OF HYCHL ***
```

P:\Transportation\Drainage\Final Design\Swale Design\D4B-10YR.LST

```
        ******  HYCHL  ****** (Version 6.1) ******          Date 08-23-2009
 Commands Read From File: d4b-10yr.chl

      JOB DITCH-4B-STA.60+50-STA.62+00LT -10 YEAR STORM
      UNI 0
 ** UNITS PARAMETER = 0 (ENGLISH)
      CHL 0.015 1.68
      TRP 1 2
 ** LEFT SIDE SLOPE    2.0 AND RIGHT SIDE SLOPE    2.0
 ** THE BASE WIDTH OF THE TRAPEZOID (ft)    1.00
      LVG C
      END
***************END OF COMMAND FILE************

 DITCH-4B-STA.60+50-STA.62+00LT -10 YEAR STORM
 ------------
 INPUT REVIEW
 ------------
   DESIGN PARAMETERS:
      DESIGN DISCHARGE (ft^3/s):            1.68
      CHANNEL SHAPE:                   TRAPEZOIDAL
      CHANNEL SLOPE (ft/ft):               .015

 *** WARNING:  DEPTH DID NOT CONVERGE. PROGRAM WILL CONTINUE
                WITH MOST RECENT VALUE
 ----------------------------------------
 HYDRAULIC CALCULATIONS USING NORMAL DEPTH
 ----------------------------------------

                          DESIGN     MAXIMUM
                          ------     -------
 FLOW (cfs)                 1.68       4.18
 DEPTH (ft)                  .82       1.07
 AREA (ft^2)                2.15       3.35
 WETTED PERIMETER (ft)      4.65       5.78
 HYDRAULIC RADIUS (ft)       .46        .58
 VELOCITY (ft/s)             .78       1.25
 MANNINGS N (LOW FLOW)       .141       .101

 ------------------
 STABILITY ANALYSIS
 ------------------

                      LINING       PERMIS SHR   CALC. SHR  STAB.
     CONDITION        TYPE         (lb/ft^2)    (lb/ft^2)  FACTOR   REMARKS
     ---------        ---------    ----------   ---------  ------   -------
 LOW FLOW LINING
   BOTTOM; STRAIGHT   VEGETATIVE  C      1.00        .77      1.30   STABLE

 *** NORMAL END OF HYCHL ***
```

P:\Transportation\Drainage\Final Design\Swale Design\D4B-2YR.LST

```
        ******  HYCHL  ****** (Version 6.1) ******          Date 08-23-2009
 Commands Read From File: d4b-2yr.chl

      JOB DITCH-6A-STA.60+50-STA.62+00LT -2 YEAR STORM
      UNI 0
 ** UNITS PARAMETER = 0 (ENGLISH)
      CHL 0.015 1.26
      TRP 1 2
 ** LEFT SIDE SLOPE    2.0 AND RIGHT SIDE SLOPE    2.0
 ** THE BASE WIDTH OF THE TRAPEZOID (ft)    1.00
      LTM 2
      END
***************END OF COMMAND FILE************

 DITCH-6A-STA.60+50-STA.62+00LT -2 YEAR STORM
 ------------
 INPUT REVIEW
 ------------
   DESIGN PARAMETERS:
      DESIGN DISCHARGE (ft^3/s):            1.26
      CHANNEL SHAPE:                  TRAPEZOIDAL
      CHANNEL SLOPE (ft/ft):               .015
 ----------------------------------------
 HYDRAULIC CALCULATIONS USING NORMAL DEPTH
 ----------------------------------------

                          DESIGN     MAXIMUM
                          ------     -------
 FLOW (cfs)                 1.26       2.85
 DEPTH (ft)                  .33        .48
 AREA (ft^2)                 .55        .94
 WETTED PERIMETER (ft)      2.49       3.15
 HYDRAULIC RADIUS (ft)       .22        .30
 VELOCITY (ft/s)            2.27       3.02
 MANNINGS N (LOW FLOW)       .029       .027

 ------------------
 STABILITY ANALYSIS
 ------------------

                      LINING       PERMIS SHR   CALC. SHR  STAB.
     CONDITION        TYPE         (lb/ft^2)    (lb/ft^2)  FACTOR   REMARKS
     ---------        ---------    ----------   ---------  ------   -------
 LOW FLOW LINING
   BOTTOM; STRAIGHT   JUTE NET          .45        .31      1.44   STABLE

 *** NORMAL END OF HYCHL ***
```

P:\Transportation\Drainage\Final Design\Swale Design\D4C-10YR.LST

```
          ******  HYCHL  ****** (Version 6.1) ******          Date 08-23-2009
 Commands Read From File: d4c-10yr.chl

       JOB DITCH-6B-STA.62+50-STA.65+90LT -10 YEAR STORM
       UNI 0
 ** UNITS PARAMETER = 0 (ENGLISH)
       CHL 0.008 1.58
       TRP 2 2 2
 ** LEFT SIDE SLOPE    2.0 AND RIGHT SIDE SLOPE    2.0
 ** THE BASE WIDTH OF THE TRAPEZOID (ft)    2.00
       LVG C
       END
***************END OF COMMAND FILE************

 DITCH-6B-STA.62+50-STA.65+90LT -10 YEAR STORM
 ------------
 INPUT REVIEW
 ------------
   DESIGN PARAMETERS:
       DESIGN DISCHARGE (ft^3/s):            1.58
       CHANNEL SHAPE:                  TRAPEZOIDAL
       CHANNEL SLOPE (ft/ft):               .008

 *** WARNING:  DEPTH DID NOT CONVERGE. PROGRAM WILL CONTINUE
                WITH MOST RECENT VALUE
 ----------------------------------------
 HYDRAULIC CALCULATIONS USING NORMAL DEPTH
 ----------------------------------------

                          DESIGN     MAXIMUM
                          ------     -------
 FLOW (cfs)                 1.58       24.41
 DEPTH (ft)                  .81        2.00
 AREA (ft^2)                2.94       12.03
 WETTED PERIMETER (ft)      5.63       10.96
 HYDRAULIC RADIUS (ft)       .52        1.10
 VELOCITY (ft/s)             .54        2.03
 MANNINGS N (LOW FLOW)       .162        .070

 ------------------
 STABILITY ANALYSIS
 ------------------

                      LINING       PERMIS SHR   CALC. SHR  STAB.
     CONDITION        TYPE         (lb/ft^2)    (lb/ft^2)  FACTOR   REMARKS
     ---------        ---------    ----------   ---------  ------   -------
 LOW FLOW LINING
   BOTTOM; STRAIGHT   VEGETATIVE  C      1.00        .41      2.46   STABLE

 *** NORMAL END OF HYCHL ***
```

P:\Transportation\Drainage\Final Design\Swale Design\D4C-2YR.LST

```
        ******  HYCHL  ****** (Version 6.1) ******          Date 08-23-2009
```

Commands Read From File: d4c-2yr.chl

```
      JOB DITCH-6B-STA.62+50-STA.65+90LT -2 YEAR STORM
      UNI 0
** UNITS PARAMETER = 0 (ENGLISH)
      CHL 0.008 1.185
      TRP 2 2 2
** LEFT SIDE SLOPE    2.0 AND RIGHT SIDE SLOPE    2.0
** THE BASE WIDTH OF THE TRAPEZOID (ft)    2.00
      LTM 1
      END
***************END OF COMMAND FILE************

DITCH-6B-STA.62+50-STA.65+90LT -2 YEAR STORM
------------
INPUT REVIEW
------------
  DESIGN PARAMETERS:
      DESIGN DISCHARGE (ft^3/s):            1.19
      CHANNEL SHAPE:                  TRAPEZOIDAL
      CHANNEL SLOPE (ft/ft):               .008
----------------------------------------
HYDRAULIC CALCULATIONS USING NORMAL DEPTH
----------------------------------------

                          DESIGN     MAXIMUM
                          ------     -------
FLOW (cfs)                  1.19       2.85
DEPTH (ft)                   .19        .30
AREA (ft^2)                  .44        .78
WETTED PERIMETER (ft)       2.83       3.34
HYDRAULIC RADIUS (ft)        .16        .23
VELOCITY (ft/s)             2.69       3.65
MANNINGS N (LOW FLOW)       .014       .014

------------------
STABILITY ANALYSIS
------------------

                      LINING       PERMIS SHR   CALC. SHR  STAB.
    CONDITION         TYPE         (lb/ft^2)    (lb/ft^2)  FACTOR   REMARKS
    ---------         ---------    ----------   ---------  ------   -------
LOW FLOW LINING
  BOTTOM; STRAIGHT   WOVEN PAPER NET      .15        .09      1.62   STABLE

*** NORMAL END OF HYCHL ***
```

P:\Transportation\Drainage\Final Design\Swale Design\D5-10YR.LST

```
          ******  HYCHL  ****** (Version 6.1) ******            Date 08-23-2009
 Commands Read From File: d5-10yr.chl

       JOB DITCH-5-STA.612+35-STA.619+87LT -10 YEAR STORM
       UNI 0
 ** UNITS PARAMETER = 0 (ENGLISH)
       CHL 0.01 3.415
       TRP 2 2
 ** LEFT SIDE SLOPE    2.0 AND RIGHT SIDE SLOPE    2.0
 ** THE BASE WIDTH OF THE TRAPEZOID (ft)    2.00
       LVG C
       END
***************END OF COMMAND FILE************

 DITCH-5-STA.612+35-STA.619+87LT -10 YEAR STORM
 ------------
 INPUT REVIEW
 ------------
   DESIGN PARAMETERS:
       DESIGN DISCHARGE (ft^3/s):            3.42
       CHANNEL SHAPE:                  TRAPEZOIDAL
       CHANNEL SLOPE (ft/ft):               .010
 ----------------------------------------
 HYDRAULIC CALCULATIONS USING NORMAL DEPTH
 ----------------------------------------

                          DESIGN     MAXIMUM
                          ------     -------
 FLOW (cfs)                 3.42       15.44
 DEPTH (ft)                  .96        1.60
 AREA (ft^2)                3.75        8.34
 WETTED PERIMETER (ft)      6.28        9.17
 HYDRAULIC RADIUS (ft)       .60         .91
 VELOCITY (ft/s)             .91        1.85
 MANNINGS N (LOW FLOW)       .116        .075

 ------------------
 STABILITY ANALYSIS
 ------------------

                       LINING       PERMIS SHR   CALC. SHR  STAB.
     CONDITION         TYPE         (lb/ft^2)    (lb/ft^2)  FACTOR   REMARKS
     ---------         ---------    ----------   ---------  ------   -------
 LOW FLOW LINING
   BOTTOM; STRAIGHT   VEGETATIVE  C       1.00        .60      1.67   STABLE

 *** NORMAL END OF HYCHL ***
```

P:\Transportation\Drainage\Final Design\Swale Design\D5-2YR.LST

```
          ******  HYCHL  ****** (Version 6.1) ******            Date 08-23-2009
 Commands Read From File: d5-2yr.chl

       JOB DITCH-5-STA.612+35-STA.619+87LT -2 YEAR STORM
       UNI 0
 ** UNITS PARAMETER = 0 (ENGLISH)
       CHL 0.01 2.5449
       TRP 2 2
 ** LEFT SIDE SLOPE    2.0 AND RIGHT SIDE SLOPE    2.0
 ** THE BASE WIDTH OF THE TRAPEZOID (ft)    2.00
       LTM 2
       END
***************END OF COMMAND FILE************

 DITCH-5-STA.612+35-STA.619+87LT -2 YEAR STORM
 ------------
 INPUT REVIEW
 ------------
   DESIGN PARAMETERS:
       DESIGN DISCHARGE (ft^3/s):            2.54
       CHANNEL SHAPE:                  TRAPEZOIDAL
       CHANNEL SLOPE (ft/ft):               .010
 ----------------------------------------
 HYDRAULIC CALCULATIONS USING NORMAL DEPTH
 ----------------------------------------

                          DESIGN     MAXIMUM
                          ------     -------
 FLOW (cfs)                 2.54        9.29
 DEPTH (ft)                  .39         .72
 AREA (ft^2)                1.07        2.48
 WETTED PERIMETER (ft)      3.73        5.23
 HYDRAULIC RADIUS (ft)       .29         .48
 VELOCITY (ft/s)            2.38        3.74
 MANNINGS N (LOW FLOW)       .027        .024

 ------------------
 STABILITY ANALYSIS
 ------------------

                      LINING       PERMIS SHR   CALC. SHR  STAB.
     CONDITION        TYPE         (lb/ft^2)    (lb/ft^2)  FACTOR   REMARKS
     ---------        ---------    ----------   ---------  ------   -------
 LOW FLOW LINING
   BOTTOM; STRAIGHT   JUTE NET            .45        .24      1.87   STABLE

 *** NORMAL END OF HYCHL ***
```

P:\Transportation\Drainage\Final Design\Swale Design\D6-10YR.LST

```
        ******  HYCHL  ****** (Version 6.1) ******          Date 05-24-2010
 Commands Read From File: d6-10yr.chl

      JOB DITCH-6-IN THE INFIELD AREA OF RT.72 EXIT RAMP FOR-10 YEAR STORM
      UNI 0
 ** UNITS PARAMETER = 0 (ENGLISH)
      CHL 0.005 3.5
      TRP 2 3 3
 ** LEFT SIDE SLOPE    3.0 AND RIGHT SIDE SLOPE    3.0
 ** THE BASE WIDTH OF THE TRAPEZOID (ft)    2.00
      LVG C
      END
***************END OF COMMAND FILE************

 DITCH-6-IN THE INFIELD AREA OF RT.72 EXIT RAMP FOR-10 YEAR STORM
 ------------
 INPUT REVIEW
 ------------
   DESIGN PARAMETERS:
      DESIGN DISCHARGE (ft^3/s):            3.50
      CHANNEL SHAPE:                   TRAPEZOIDAL
      CHANNEL SLOPE (ft/ft):               .005

 *** WARNING:  DEPTH DID NOT CONVERGE. PROGRAM WILL CONTINUE
                WITH MOST RECENT VALUE
 ----------------------------------------
 HYDRAULIC CALCULATIONS USING NORMAL DEPTH
 ----------------------------------------

                          DESIGN     MAXIMUM
                          ------     -------
 FLOW (cfs)                 3.50       91.24
 DEPTH (ft)                 1.12        3.21
 AREA (ft^2)                6.04       37.23
 WETTED PERIMETER (ft)      9.11       22.27
 HYDRAULIC RADIUS (ft)       .66        1.67
 VELOCITY (ft/s)             .58        2.45
 MANNINGS N (LOW FLOW)       .137        .060

 ------------------
 STABILITY ANALYSIS
 ------------------

                       LINING       PERMIS SHR   CALC. SHR  STAB.
     CONDITION         TYPE         (lb/ft^2)    (lb/ft^2)  FACTOR   REMARKS
     ---------         ---------    ----------   ---------  ------   -------
 LOW FLOW LINING
   BOTTOM; STRAIGHT   VEGETATIVE  C       1.00        .35      2.86   STABLE

 *** NORMAL END OF HYCHL ***
```

P:\Transportation\Drainage\Final Design\Swale Design\D6-2YR.LST

```
          ******  HYCHL  ****** (Version 6.1) ******          Date 05-24-2010
 Commands Read From File: d6-2yr.chl

       JOB DITCH-6-IN THE INFIELD AREA OF RT.72 EXIT RAMP FOR TEMPORARY LINE-2 YEAR
       STO
       UNI 0
 ** UNITS PARAMETER = 0 (ENGLISH)
       CHL 0.005 2.6
       TRP 2 3 3
 ** LEFT SIDE SLOPE    3.0 AND RIGHT SIDE SLOPE    3.0
 ** THE BASE WIDTH OF THE TRAPEZOID (ft)    2.00
       LTM 1
       END
***************END OF COMMAND FILE************

 DITCH-6-IN THE INFIELD AREA OF RT.72 EXIT RAMP FOR TEMPORARY LINE-2 YEAR STO
 ------------
 INPUT REVIEW
 ------------
   DESIGN PARAMETERS:
       DESIGN DISCHARGE (ft^3/s):            2.60
       CHANNEL SHAPE:                  TRAPEZOIDAL
       CHANNEL SLOPE (ft/ft):               .005
 ----------------------------------------
 HYDRAULIC CALCULATIONS USING NORMAL DEPTH
 ----------------------------------------

                          DESIGN     MAXIMUM
                          ------     -------
 FLOW (cfs)                 2.60        6.11
 DEPTH (ft)                  .31         .48
 AREA (ft^2)                 .91        1.65
 WETTED PERIMETER (ft)      3.97        5.04
 HYDRAULIC RADIUS (ft)       .23         .33
 VELOCITY (ft/s)            2.85        3.69
 MANNINGS N (LOW FLOW)       .014        .014

 ------------------
 STABILITY ANALYSIS
 ------------------

                       LINING       PERMIS SHR   CALC. SHR  STAB.
     CONDITION         TYPE         (lb/ft^2)    (lb/ft^2)  FACTOR   REMARKS
     ---------         ---------    ----------   ---------  ------   -------
 LOW FLOW LINING
   BOTTOM; STRAIGHT   WOVEN PAPER NET      .15        .10      1.55   STABLE

 *** NORMAL END OF HYCHL ***
```

P:\Transportation\Drainage\Final Design\Swale Design\D7-10YR.LST

```
          ******  HYCHL  ****** (Version 6.1) ******           Date 05-24-2010
 Commands Read From File: d7-10yr.chl

       JOB DITCH-7-IN WEST SIDE OF WASHINGTON STREET FOR-10 YEAR STORM
       UNI 0
 ** UNITS PARAMETER = 0 (ENGLISH)
       CHL 0.006 0.55
       TRP 2 2 12
 ** LEFT SIDE SLOPE    2.0 AND RIGHT SIDE SLOPE   12.0
 ** THE BASE WIDTH OF THE TRAPEZOID (ft)    2.00
       LVG C
       N   0.2   0.2
 ** LOW  FLOW N VALUE=  .200
 ** SIDE SLOPE N VALUE=  .200
       END
***************END OF COMMAND FILE************

 DITCH-6-IN THE INFIELD AREA OF RT.72 EXIT RAMP FOR-10 YEAR STORM
 ------------
 INPUT REVIEW
 ------------
   DESIGN PARAMETERS:
       DESIGN DISCHARGE (ft^3/s):              .55
       CHANNEL SHAPE:                   TRAPEZOIDAL
       CHANNEL SLOPE (ft/ft):                 .006
 -----------------------------------------
 HYDRAULIC CALCULATIONS USING NORMAL DEPTH
 -----------------------------------------
```

	DESIGN	MAXIMUM
FLOW (cfs)	.55	39.38
DEPTH (ft)	.44	2.67
AREA (ft^2)	2.27	55.28
WETTED PERIMETER (ft)	8.35	40.13
HYDRAULIC RADIUS (ft)	.27	1.38
VELOCITY (ft/s)	.24	.71
MANNINGS N (LOW FLOW)	.200	.200

```
 ------------------
 STABILITY ANALYSIS
 ------------------
```

CONDITION	LINING TYPE	PERMIS SHR (lb/ft^2)	CALC. SHR (lb/ft^2)	STAB. FACTOR	REMARKS
LOW FLOW LINING					
BOTTOM; STRAIGHT	VEGETATIVE C	1.00	.17	6.00	STABLE

*** NORMAL END OF HYCHL ***

```
P:\Transportation\Drainage\Final Design\Swale Design\D7-2YR.LST

          ******  HYCHL  ****** (Version 6.1) ******           Date 05-24-2010
  □□□□□□□□□□□□□□□□□□□□□□□□□□□□□□□□□□□□□□□□□□□□□□□□□□□□□□□□□□□□□□□□□□□□□□□□
 Commands Read From File: d7-2yr.chl

       JOB DITCH-7-IN WEST SIDE OF WASHINGTON STREET FOR TEMPORARY LINE-2 YEAR STO
       UNI 0
 ** UNITS PARAMETER = 0 (ENGLISH)
       CHL 0.005 0.41
       TRP 2 2 12
 ** LEFT SIDE SLOPE    2.0 AND RIGHT SIDE SLOPE   12.0
 ** THE BASE WIDTH OF THE TRAPEZOID (ft)    2.00
       LTM 1
       END
***************END OF COMMAND FILE************

 DITCH-6-IN THE INFIELD AREA OF RT.72 EXIT RAMP FOR TEMPORARY LINE-2 YEAR STO
 ------------
 INPUT REVIEW
 ------------
   DESIGN PARAMETERS:
       DESIGN DISCHARGE (ft^3/s):             .41
       CHANNEL SHAPE:                   TRAPEZOIDAL
       CHANNEL SLOPE (ft/ft):               .005
 -----------------------------------------
 HYDRAULIC CALCULATIONS USING NORMAL DEPTH
 -----------------------------------------

                          DESIGN     MAXIMUM
                          ------     -------
 FLOW (cfs)                  .41        8.73
 DEPTH (ft)                  .11         .48
 AREA (ft^2)                 .31        2.58
 WETTED PERIMETER (ft)      3.58        8.86
 HYDRAULIC RADIUS (ft)       .09         .29
 VELOCITY (ft/s)            1.34        3.38
 MANNINGS N (LOW FLOW)       .015        .014

 ------------------
 STABILITY ANALYSIS
 ------------------

                      LINING       PERMIS SHR  CALC. SHR  STAB.
     CONDITION        TYPE         (lb/ft^2)   (lb/ft^2)  FACTOR   REMARKS
     ---------        ---------    ----------  ---------  ------   -------
 LOW FLOW LINING
   BOTTOM; STRAIGHT  WOVEN PAPER NET      .15        .03      4.35   STABLE

 *** NORMAL END OF HYCHL ***
```

P:\Transportation\Drainage\Final Design\Swale Design\D8-10YR.LST

```
        ******  HYCHL  ****** (Version 6.1) ******          Date 05-24-2010
 Commands Read From File: d8-10yr.chl

      JOB DITCH-8-IN EAST SIDE OF WASHINGTON STREET FOR-10 YEAR STORM
      UNI 0
 ** UNITS PARAMETER = 0 (ENGLISH)
      CHL 0.006 0.9
      TRP 2 2 12
 ** LEFT SIDE SLOPE    2.0 AND RIGHT SIDE SLOPE   12.0
 ** THE BASE WIDTH OF THE TRAPEZOID (ft)    2.00
      LVG C
      N   0.2   0.2
 ** LOW  FLOW N VALUE=  .200
 ** SIDE SLOPE N VALUE=  .200
      END
***************END OF COMMAND FILE************

 DITCH-6-IN THE INFIELD AREA OF RT.72 EXIT RAMP FOR-10 YEAR STORM
 ------------
 INPUT REVIEW
 ------------
   DESIGN PARAMETERS:
      DESIGN DISCHARGE (ft^3/s):              .90
      CHANNEL SHAPE:                   TRAPEZOIDAL
      CHANNEL SLOPE (ft/ft):                .006
 ----------------------------------------
 HYDRAULIC CALCULATIONS USING NORMAL DEPTH
 ----------------------------------------

                          DESIGN     MAXIMUM
                          ------     -------
 FLOW (cfs)                  .90       39.38
 DEPTH (ft)                  .56        2.67
 AREA (ft^2)                3.28       55.28
 WETTED PERIMETER (ft)      9.94       40.13
 HYDRAULIC RADIUS (ft)       .33        1.38
 VELOCITY (ft/s)             .27         .71
 MANNINGS N (LOW FLOW)       .200        .200

 ------------------
 STABILITY ANALYSIS
 ------------------

                      LINING       PERMIS SHR   CALC. SHR  STAB.
     CONDITION        TYPE         (lb/ft^2)    (lb/ft^2)  FACTOR   REMARKS
     ---------        ---------    ----------   ---------  ------   -------
 LOW FLOW LINING
   BOTTOM; STRAIGHT   VEGETATIVE  C      1.00        .21      4.80   STABLE

 *** NORMAL END OF HYCHL ***
```

P:\Transportation\Drainage\Final Design\Swale Design\D8-2YR.LST

```
          ******  HYCHL  ****** (Version 6.1) ******           Date 05-24-2010
 Commands Read From File: d8-2yr.chl

       JOB DITCH-8-IN EAST SIDE OF WASHINGTON STREET FOR TEMPORARY LINE-2 YEAR STO
       UNI 0
 ** UNITS PARAMETER = 0 (ENGLISH)
       CHL 0.005 0.68
       TRP 2 2 12
 ** LEFT SIDE SLOPE    2.0 AND RIGHT SIDE SLOPE   12.0
 ** THE BASE WIDTH OF THE TRAPEZOID (ft)    2.00
       LTM 1
       END
***************END OF COMMAND FILE************

 DITCH-6-IN THE INFIELD AREA OF RT.72 EXIT RAMP FOR TEMPORARY LINE-2 YEAR STO
 ------------
 INPUT REVIEW
 ------------
   DESIGN PARAMETERS:
       DESIGN DISCHARGE (ft^3/s):             .68
       CHANNEL SHAPE:                  TRAPEZOIDAL
       CHANNEL SLOPE (ft/ft):                .005
 -----------------------------------------
 HYDRAULIC CALCULATIONS USING NORMAL DEPTH
 -----------------------------------------

                               DESIGN     MAXIMUM
                               ------     -------
 FLOW (cfs)                       .68        8.73
 DEPTH (ft)                       .14         .48
 AREA (ft^2)                      .43        2.58
 WETTED PERIMETER (ft)           4.04        8.86
 HYDRAULIC RADIUS (ft)            .11         .29
 VELOCITY (ft/s)                 1.58        3.38
 MANNINGS N (LOW FLOW)            .015        .014

 ------------------
 STABILITY ANALYSIS
 ------------------

                        LINING        PERMIS SHR   CALC. SHR  STAB.
    CONDITION           TYPE          (lb/ft^2)    (lb/ft^2)  FACTOR    REMARKS
    ---------           ---------     ----------   ---------  ------    -------
 LOW FLOW LINING
   BOTTOM; STRAIGHT   WOVEN PAPER NET       .15         .04       3.36    STABLE

 *** NORMAL END OF HYCHL ***
```

Project: **NB-H Busway**
Project No: **36937231**
Description: **Swales Design-Water Depth above the CL Grate - At Sta. 54+00**
DESIGN STORM=**10 YEARS**

Computed by : LGAO
Checked by

Date: **11/20/2009**

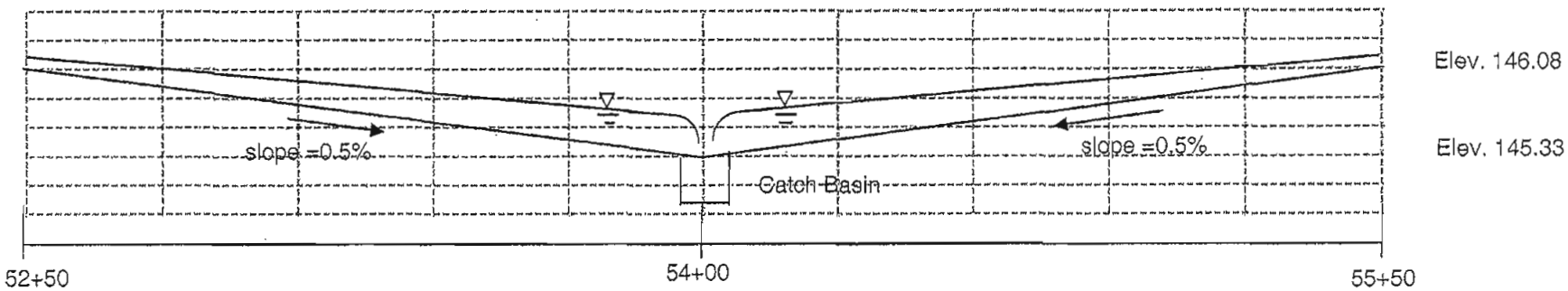

1. Assume Orifice Flow
   Water Depth Above the Grate:

$$d = \left[\frac{Q_i C_{FS}}{CA}\right]^2 / [2g]$$

(Refer to Eq 11.8, ConnDOT Drainage Manual, 2002)

Where:

Design Q = 1.70 cfs
C_{FS} = 1.25
C=0.67
A = 3.13 sq.ft.

d= 0.02 ft < 0.4 ft

2. Assume Weir Flow

$$d = \left[\frac{Q_i C_{FS}}{CP}\right]^{2/3}$$

(Refer to Eq 11.7, ConnDOT Drainage Manual, 2002)

Where:

P = 7.33 ft

d= 0.57 ft

3. Water Depth Above the Grate **0.57 ft**

Appendix K

Outlet Protection Design

OUTLET AT STATION 311+01 - RTE 72 EXIT RAMP

DESIGN FREQUENCY: 10 YEAR

Outlet Hydraulic Information: (Results from StormCAD)

Outlet Discharge cfs	Sp/Rp inch	TW ft	Velocity ft/s
0.15	12	0.00	3.78

OUTLET PROTECTION TYPE SELECTION:

Minimum Tailwater Condition (TW < 0.5 Rp) is selected in the outlet desigh and **TYPE A RIPRAP APRON** is the outlet type. According to Table 11-12.1 of the ConnDOT drainage manual, **LENGTH OF APRON is 10'** . The dimension of theRiprap Apron is reference to Figure 11-13 , *ConnDOT Drainage Manual.*

Sp	1 feet
La	10 feet
W1	3 feet
W2	10 feet
X	3

RIPRAP TYPE

Outlet Velocity < 8 ft/s

⟹ **MODIFIED RIPRAP is selected.**

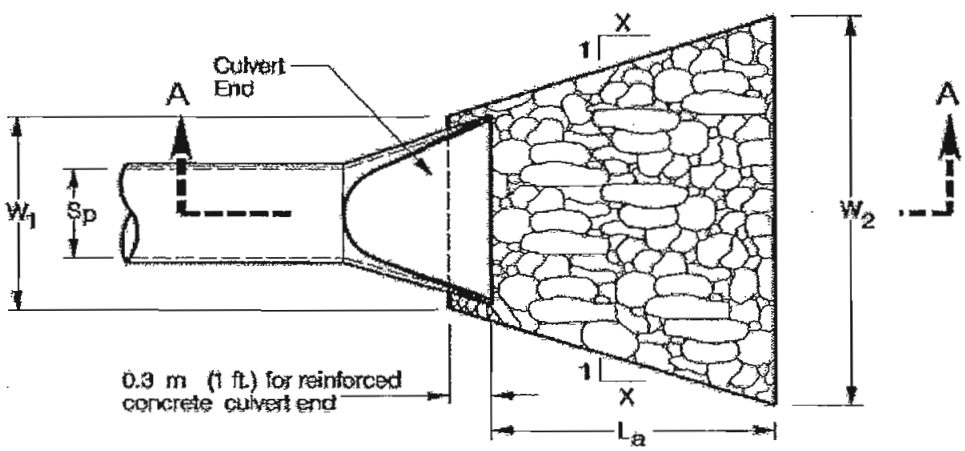

TYPE A RIPRAP APRON, Figure 11-13 , ConnDOT Drainage Manual.

URS

Job:	New Britain – Hartford Busway	Project No.	36937230	Page ___ of ___	
Description:	Outlet Protection	Computed by	LGAO	Sheet 2 of 5	
		Checked by		Date 8/19/2009	
				Date	

OUTLET AT STATION 312+41 - RTE 72 EXIT RAMP

DESIGN FREQUENCY: 10 YEAR

Outlet Hydraulic Information: (Results from StormCAD)

Outlet Discharge cfs	Sp/Rp inch	TW ft	Velocity ft/s
0.15	12	0.00	3.33

OUTLET PROTECTION TYPE SELECTION:

Minimum Tailwater Condition (TW < 0.5 Rp) is selected in the outlet desigh and **TYPE A RIPRAP APRON** is the outlet type. According to Table 11-12.1 of the ConnDOT drainage manual, **LENGTH OF APRON is 10'** . The dimension of theRiprap Apron is reference to Figure 11-13 , *ConnDOT Drainage Manual.*

Sp	1 feet
La	10 feet
W1	3 feet
W2	10 feet
X	3

RIPRAP TYPE

Outlet Velocity < 8 ft/s

⟹ **MODIFIED RIPRAP is selected.**

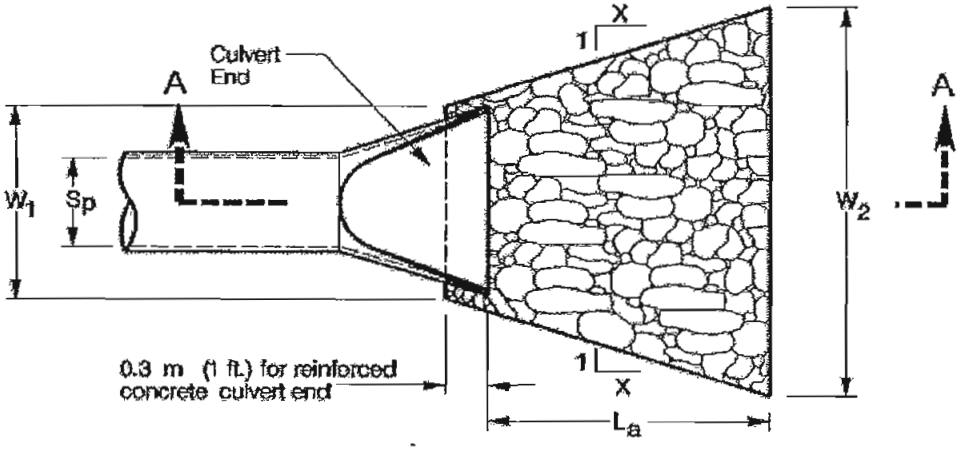

TYPE A RIPRAP APRON, Figure 11-13 , ConnDOT Drainage Manual.

OUTLET AT STATION 208+97 - RTE EXIT RAMP

DESIGN FREQUENCY: 10 YEAR

Outlet Hydraulic Information: (Results from StormCAD)

Outlet Discharge cfs	Sp/Rp inch	TW ft	Velocity ft/s
0.68	12	0.00	3.87

OUTLET PROTECTION TYPE SELECTION:

Minimum Tailwater Condition (TW < 0.5 Rp) is selected in the outlet desigh and **TYPE A RIPRAP APRON** is the outlet type. According to Table 11-12.1 of the ConnDOT drainage manual, **LENGTH OF APRON is 10' .** The dimension of theRiprap Apron is reference to Figure 11-13 , *ConnDOT Drainage Manual.*

Sp	1 feet
La	10 feet
W1	3 feet
W2	10 feet
X	3

RIPRAP TYPE

Outlet Velocity < 8 ft/s

⟹ **MODIFIED RIPRAP is selected.**

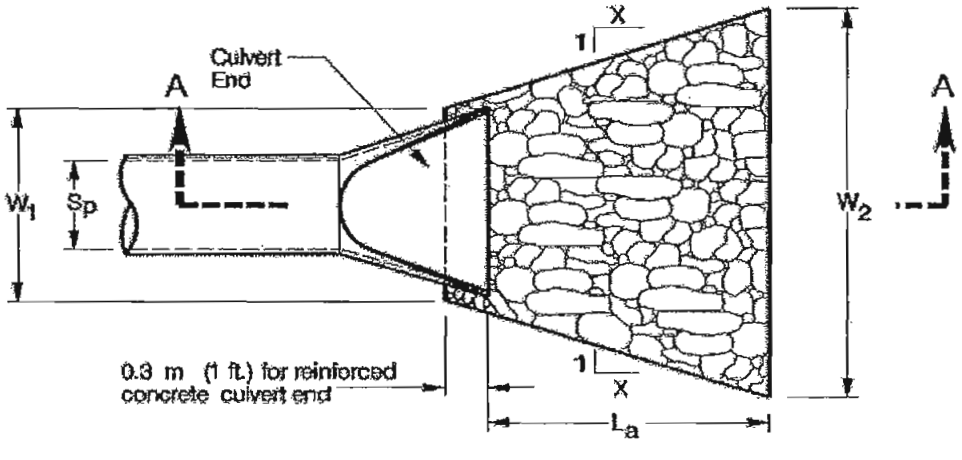

TYPE A RIPRAP APRON, Figure 11-13 , ConnDOT Drainage Manual.

OUTLET AT STATION 23+75, 25+75, 27+00 and 28+25
DESIGN FREQUENCY: 10 YEAR

Outlet Hydraulic Information: (Results from StormCAD)

Outlet Discharge cfs	Sp/Rp inch	TW ft	Velocity ft/s	Station
0.19	12	0.00	3.00	23+75
1.34	12	0.00	3.30	25+75
0.2	12	0.00	4.20	27+00
0.54	12	0.00	3.00	28+25

OUTLET PROTECTION TYPE SELECTION:

Minimum Tailwater Condition (TW < 0.5 Rp) is selected in the outlet desigh and **TYPE A RIPRAP APRON** is the outlet type. According to Table 11-12.1 of the ConnDOT drainage manual, **LENGTH OF APRON is 10' .** The dimension of theRiprap Apron is reference to Figure 11-13 , *ConnDOT Drainage Manual.*

Sp 1 feet
La 10 feet
W1 3 feet
W2 10 feet
X 3

RIPRAP TYPE
Outlet Velocity < 8 ft/s
⟹ **MODIFIED RIPRAP is selected.**

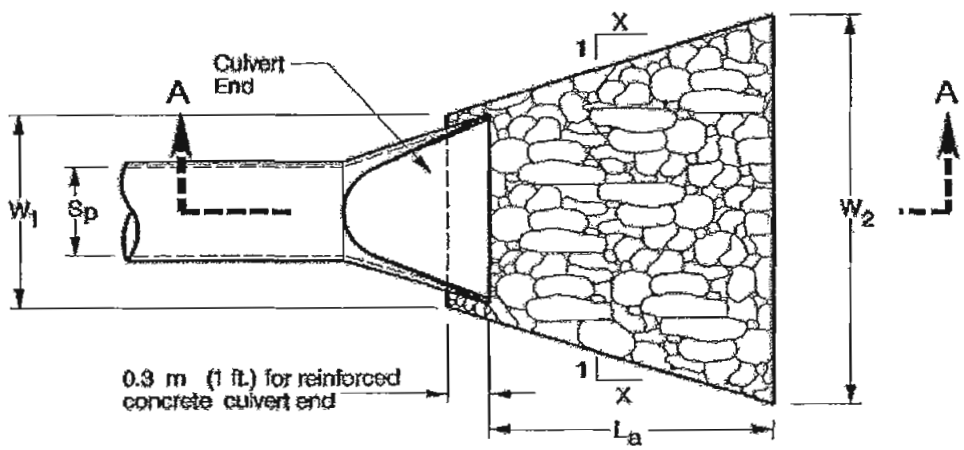

TYPE A RIPRAP APRON, Figure 11-13 , ConnDOT Drainage Manual.

OUTLET AT STATION 98+00

DESIGN FREQUENCY: 10 YEAR

Outlet Hydraulic Information: (Results from StormCAD)

Outlet Discharge cfs	Sp/Rp inch	TW ft	Velocity ft/s
21.5	30	0.00	6.50

OUTLET PROTECTION TYPE SELECTION:

Minimum Tailwater Condition (TW < 0.5 Rp) is selected in the outlet desigh and **TYPE A RIPRAP APRON** is the outlet type. According to Table 11-12.1 of the ConnDOT drainage manual, **LENGTH OF APRON is 17' .** The dimension of theRiprap Apron is reference to Figure 11-13 , *ConnDOT Drainage Manual.*

Sp	2.5 feet
La	17 feet
W1	7.5 feet
W2	27 feet
X	3

RIPRAP TYPE

Outlet Velocity < 8 ft/s

⟹ ***MODIFIED RIPRAP is selected.***

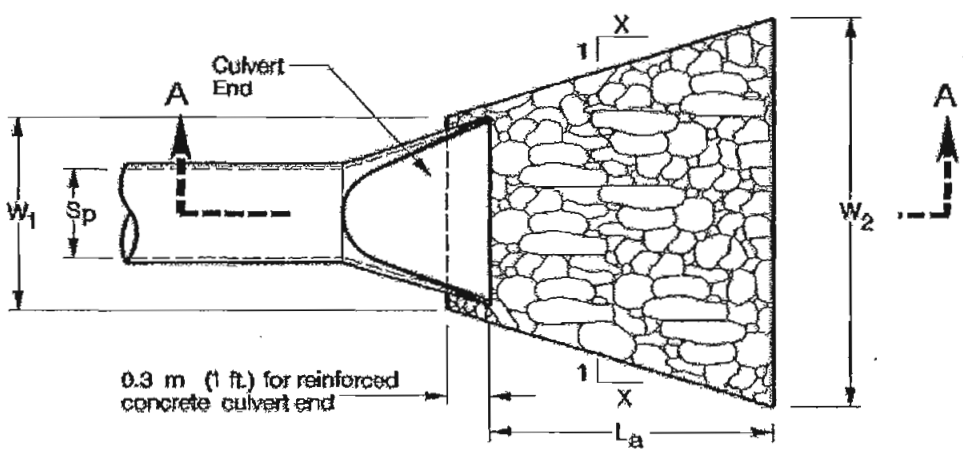

TYPE A RIPRAP APRON, Figure 11-13 , ConnDOT Drainage Manual.

Appendix L

Comparison of the Existing Condition and the Proposed Condition

NEW BRITAIN-HARTFORD BUSWAY
New Britain to Hartford
URS PROJECT NO.36937230

URS

DESIGNED BY: LGAO DATE: 09/30/2009
CHECKED BY: DATE:

Comparison of the Existing Condition and the Proposed Condition SHEET 1 OF 1

Condition		Drainage Area (T) (acres)	Drainage Area Per (acres)	Drainage Area Imper (acres)	Cr	AC (acres)	Tc (min)	i 10yr (in/hr)	i 10yr (in/hr)	i 100yr (in/hr)	Discharge 2 yr (cfs)	Discharge 10 yr (cfs)	Discharge 100 yr (cfs)
System One													
Existing		1.78	1.14	0.64	0.52	0.92	10	3.6	4.8	6.5	3.3	4.4	7.5
Proposed		1.63	1.55	0.08	0.33	0.54	10	3.6	4.8	6.5	1.9	2.6	4.4
System Two													
Existing		3.42	2.38	1.04	0.48	1.65	10	3.6	4.8	6.5	5.9	7.9	13.4
Proposed		3.74	3.00	0.74	0.42	1.57	10	3.6	4.8	6.5	5.6	7.5	12.7
System Three													
Existing		9.30	3.55	5.75	0.51	4.74	50	1.4	2.1	3.2	6.6	10.0	19.0
Proposed		9.30	1.60	7.70	0.80	7.41	30	1.9	2.8	4.1	1.4	5.8	23.6
System Four													
Existing		3.89	2.14	1.75	0.54	2.10	15	2.8	4.0	5.5	5.9	8.4	14.4
Proposed		3.89	1.91	1.98	0.64	2.49	10	3.6	4.8	6.5	9.0	12.0	20.2
System Five													
Existing	5-1	1.16	0.60	0.56	0.59	0.68	10	3.6	4.8	6.5	2.5	3.3	5.6
	5-2	1.78	1.43	0.35	0.42	0.74	10	3.6	4.8	6.5	2.7	3.6	6.0
	5-3	0.80	0.62	0.18	0.44	0.35	10	3.6	4.8	6.5	1.3	1.7	2.8
	5-4	0.91	0.84	0.07	0.35	0.32	10	3.6	4.8	6.5	1.1	1.5	2.6
										Total	7.5	10.0	17.0
Post	5-1	0.82	0.33	0.49	0.66	0.54	10	3.6	4.8	6.5	1.9	2.6	4.4
	5-2	1.96	1.17	0.79	0.54	1.06	10	3.6	4.8	6.5	2.4	3.1	8.6
	5-3	0.44	0.12	0.32	0.74	0.32	10	3.6	4.8	6.5	1.2	1.6	2.6
	5-4	0.76	0.60	0.16	0.42	0.32	10	3.6	4.8	6.5	1.1	1.5	2.6
										Total	6.7	8.8	18.2
System Six													
Existing		13.62	13.62	0.00	0.30	4.09	21	2.5	3.5	5.0	10.2	14.3	25.5
Proposed		13.62	13.62	0.00	0.30	4.09	21	2.5	3.5	5.0	10.2	14.3	25.5
System Seven													
Existing		2.19	0.00	2.19	0.90	1.97	10	3.6	4.8	6.5	7.1	9.5	16.0
Proposed		1.89	0.00	1.89	0.90	1.70	10	3.6	4.8	6.5	6.1	8.1	13.8
System Eight													
Existing		1.24	0.60	0.63	0.61	0.75	5	4.8	6.0	7.8	3.6	4.5	7.3
Proposed		1.24	0.49	0.74	0.66	0.82	5	4.8	6.0	7.8	3.9	4.9	7.9

NEW BRITAIN-HARTFORD BUSWAY
New Britain to Hartford
URS PROJECT NO.36937230

URS

DESIGNED BY: **LGAO** DATE: 09/30/2009
CHECKED BY: DATE:

Comparison of the Existing Condition and the Proposed Condition SHEET 1 OF 1

Condition		Drainage Area (T) (acres)	Drainage Area Per (acres)	Drainage Area Imper (acres)	Cr	AC (acres)	Tc (min)	i 10yr in/hr	i 10yr in/hr	i 100yr in/hr	Discharge 2 yr (cfs)	Discharge 10 yr (cfs)	Discharge 100 yr (cfs)
Bridge Deck Drainage System Over Route 9													
Existing	EX-B	Combine Existing Downspout Pier 4				0.14	10	3.6	4.8	6.5	0.4	0.5	0.9
	EX-D	Combine Existing Downspout Pier 3				0.23	10	3.6	4.8	6.5	1.1	1.4	2.4
	EX-E	Combine Existing Downspout Pier 2				0.25	10	3.6	4.8	6.5	0.7	0.9	1.6
	EX-G	Combine Existing Downspout Pier 1				0.15	10	3.6	4.8	6.5	0.5	0.6	1.1
	EX-L	Combine Existing Abut 1				0.26	10	3.6	4.8	6.5	1.2	1.5	2.6
										Total	3.8	5.1	8.6
Post	PRO-B	Combine Pro Downspout Pier 4				0.16	10	3.6	4.8	6.5	0.6	0.8	1.0
	PRO-D	Combine Pro Downspout Pier 3				0.20	10	3.6	4.8	6.5	0.9	1.2	2.0
	PRO-E	Combine Pro Downspout Pier 2				0.30	10	3.6	4.8	6.5	0.9	1.2	2.0
	PRO-G	Combine Pro Downspout Pier 1				0.20	10	3.6	4.8	6.5	0.4	1.0	1.6
	PRO-L	Combine Pro Downspout Abut 1				0.32	10	3.6	4.8	6.5	1.2	1.6	2.6
										Total	3.9	5.7	9.3

System Piper Brook

Existing										44.2	61.1	106.7
Proposed										39.2	56.4	113.6

System Route 9 /72 Outlet into South Retention Pond

Existing										9.7	13.0	22.0
Proposed										9.6	13.2	22.0

Appendix M

References

- WQB Outlet Structure Details
- Scupper Type

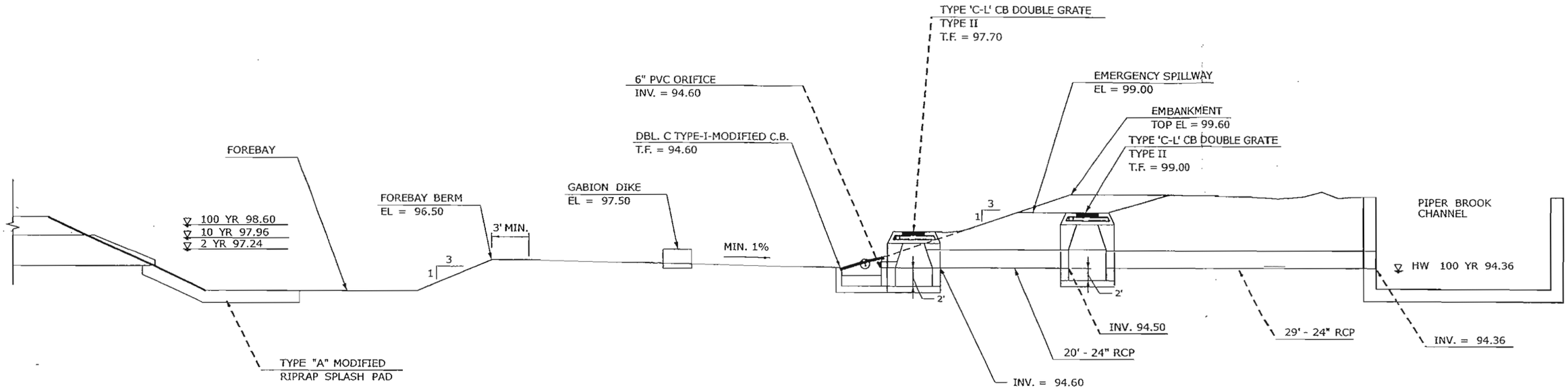

DETENTION BASIN - ELEVATION VIEW

NTS

REV.	DATE	REVISION DESCRIPTION	SHEET NO.
-	-	-	-
-	-	-	-
-	-	-	-
-	-	-	-
-	-	-	-
-	-	-	-
-	-	-	-

THE INFORMATION, INCLUDING ESTIMATED QUANTITIES OF WORK, SHOWN ON THESE SHEETS IS BASED ON LIMITED INVESTIGATIONS BY THE STATE AND IS IN NO WAY WARRANTED TO INDICATE THE CONDITIONS OF ACTUAL QUANTITIES OF WORK WHICH WILL BE REQUIRED.

Plotted: 12/9/2009

DESIGNER/DRAFTER: D. SHI
CHECKED BY: T. WALB
SCALE AS NOTED

STATE OF CONNECTICUT
DEPARTMENT OF TRANSPORTATION

Filename: ...\HW.MSH.088.H035.MDS-22.dgn

SIGNATURE/BLOCK: URS CORPORATION AES
APPROVED BY: -
DATE: -

PROJECT TITLE: NEW BRITAIN - HARTFORD BUSWAY

TOWN: NEW BRITAIN
DRAWING TITLE: MISCELLANEOUS DETAILS DENTENTION BASIN ELEVATION

PROJECT NO. 88-H035
DRAWING NO. MDS-22
SHEET NO.

P:\088.H035\highways\Site_Contract_Sheet_Files\HW.MSH.088.H035.MDS-22.dgn

NOTE: When specifying or ordering grates–
Please refer to "CHOOSING THE PROPER INLET GRATE" on pages 108 and 109.

R-4014-T
Overhead Scupper with Bolted Grate

Heavy Duty

Standard 125 # flanged template downspout furnished by others.

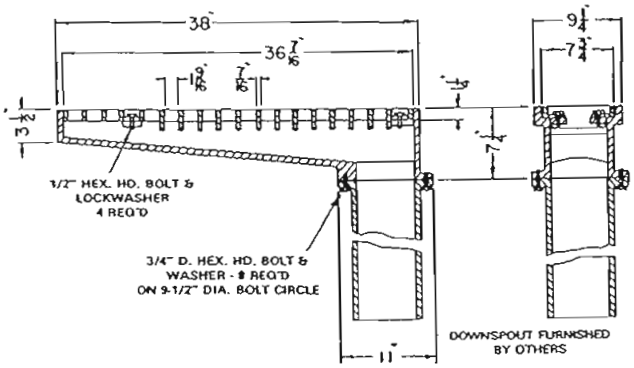

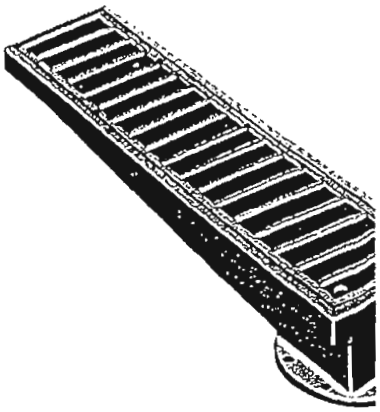

R-4014-TL
Overhead Scupper with Bolted Grate

Heavy Duty

Downspout furnished by others.

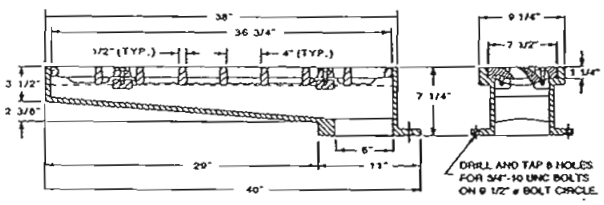

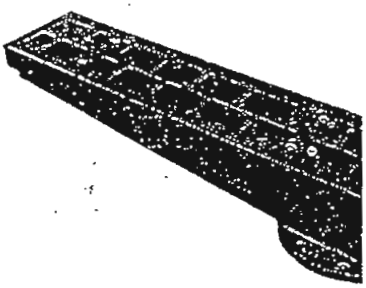

Scupper with Bolted Grate

Also available with Type V grate shown on R-392
Type V grate is considered bicycle safe only whe
installed with vanes perpendicular to the curb.

anged template downspout furnished by others.

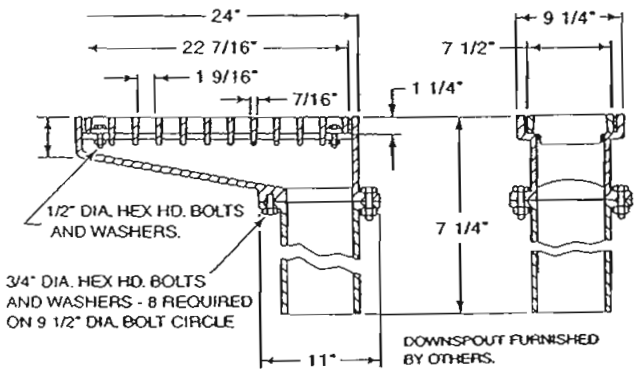

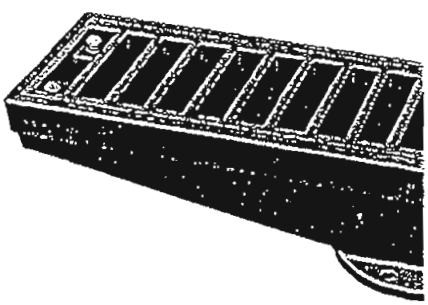

Appendix N

Outlet Inspection

- Forms
- Photos

FORM 3: STORM SEWER SYSTEM – INLET/OUTLET FACILITIES TO/FROM CHANNEL, DITCHES, ETC…

Station, Offset: Route 9 South Trunk Line

Project No. 36937231

Type: Outlet

Route No. 9

Outlet Protection (type and limits): Concrete

Date 9/10/2009

Condition

	Good	Fair	Poor	N/A
Erosion	✓			
Inverts	✓			
Piping	✓			
Siltation, Debris	✓			
Culvert Ends	✓			
Wingwalls	✓			
Headwalls	✓			
Undermining	✓			
Scour	✓			
Waterway Adequacy	✓			
Outlet Protection	✓			

Remarks/Findings:

Route 9 South Trunk line outlet is in a good condition.

Recommendations:

No upgrade recommendation.

FORM 3: STORM SEWER SYSTEM – INLET/OUTLET FACILITIES TO/FROM CHANNEL, DITCHES, ETC…

Station, Offset: Piper Brook @ Crossing of East Street Project No. 36937231

Type: Outlet Route No. —

Outlet Protection (type and limits): Concrete Pad Date 9/10/2009

Condition

	Good	Fair	Poor	N/A
Erosion	☑	☐	☐	☐
Inverts	☑	☐	☐	☐
Piping	☑	☐	☐	☐
Siltation, Debris	☑	☐	☐	☐
Culvert Ends	☑	☐	☐	☐
Wingwalls	☑	☐	☐	☐
Headwalls	☑	☐	☐	☐
Undermining	☑	☐	☐	☐
Scour	☑	☐	☐	☐
Waterway Adequacy	☑	☐	☐	☐
Outlet Protection	☑	☐	☐	☐

Remarks/Findings:

Outlet of Piper Brook culvert at crossing of east street is in a good condition.

Recommendations:

No up grade recommendation.

FORM 3: STORM SEWER SYSTEM – INLET/OUTLET FACILITIES TO/FROM CHANNEL, DITCHES, ETC…

Station, Offset: 24 + 42 80' Left

Type: Paved Ditch

Outlet Protection (type and limits): paved

Project No. 88 - H035

Route No. Cemetery Service Road

Date 6/1/10

Condition

	Good	Fair	Poor	N/A
Erosion	✓			
Inverts				✓
Piping				✓
Siltation, Debris		✓		
Culvert Ends				✓
Wingwalls				✓
Headwalls				✓
Undermining		✓		
Scour	✓			
Waterway Adequacy	✓			
Outlet Protection	✓			

Remarks/Findings:

The paved ditch which will accommodate the discharge from a catch basin installed on the Cemetery Service Road is in a good condition.

Recommendations:

No upgrade needed.

Look upstream - Piper Brook crossing at East Street, New Britain, CT

Look downstream - Piper Brook crossing at East Street, New Britain, CT

Downstream Face of the Culvert - Piper Brook crossing at East Street, New Britain, CT

Look downstream – at outlet of the Rte9 Trunk Line, a 102" RCP, located east of the Rte 9 25Exit Ramp

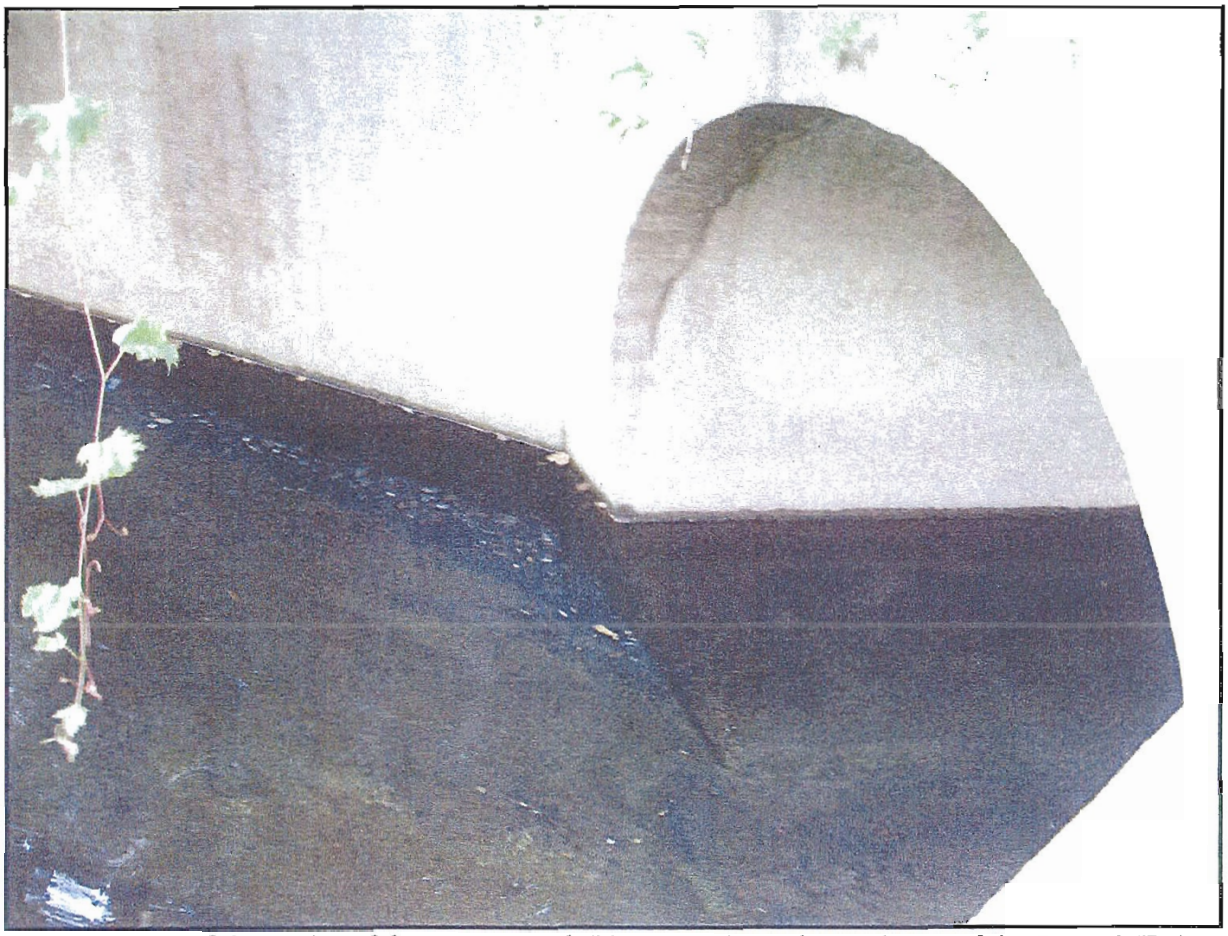

Downstream Face of the outlet of the Rte 9 Trunk Line, a Culvert, located east of the Rte 9 25Exit Ramp

Paved Ditch at Sta. 24+42 80' Left, Cemetery Service Road

Uptream of Proposed Outlet, Cemetery Service Road

Downstream of Proposed Outlet, Cemetery Service Road

Appendix O

Flood Insurance Rate Map

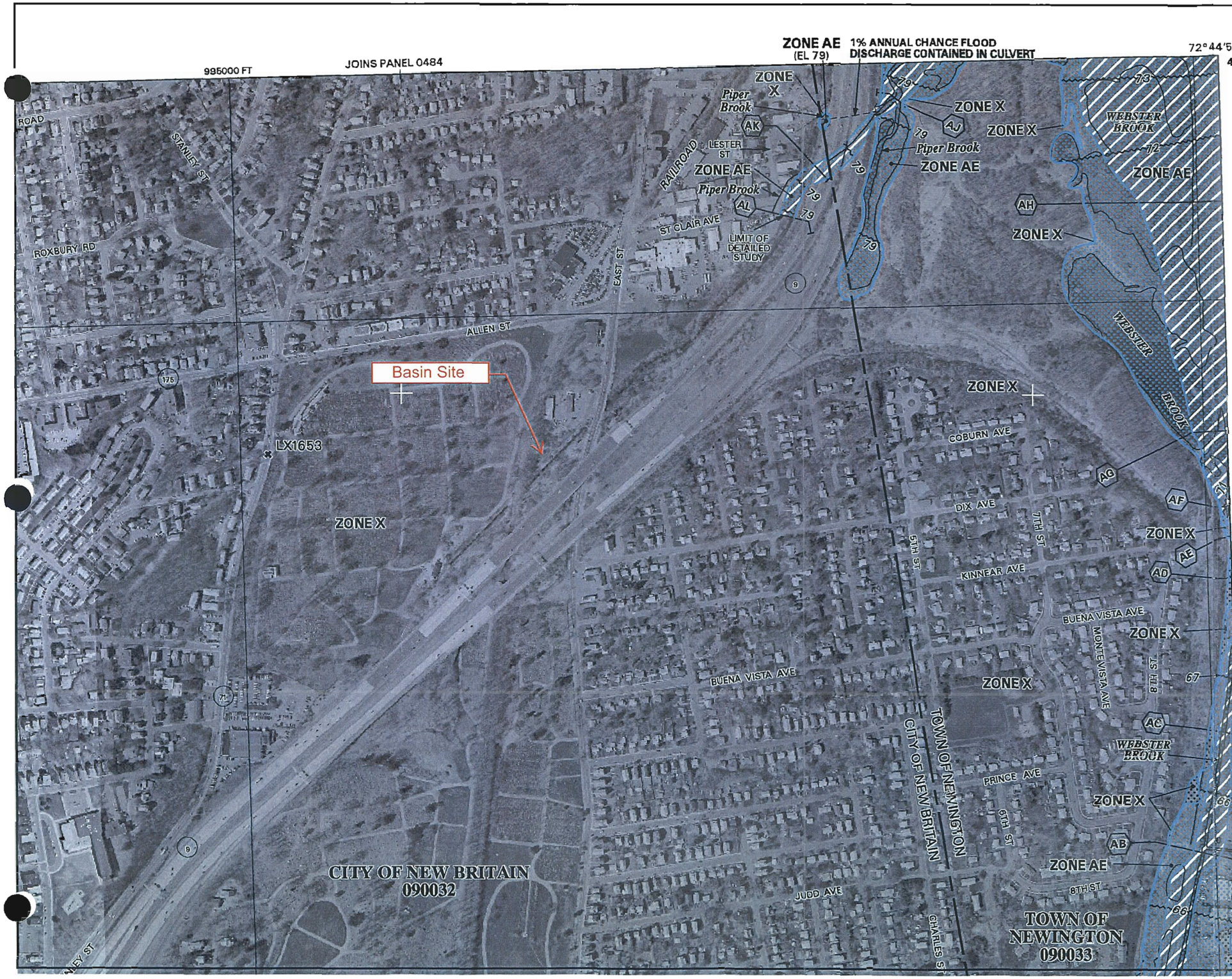

...od insurance is available in this community, contact you ...nal Flood Insurance Program at (800) 638-6620.

MAP SCALE 1" = 500'

250 0 500 1000 FEET

NAP

NATIONAL FLOOD INSURANCE PROGRAM

PANEL 0492F

FIRM
FLOOD INSURANCE RATE MAP

HARTFORD COUNTY, CONNECTICUT
(ALL JURISDICTIONS)

PANEL 492 OF 675

(SEE MAP INDEX FOR FIRM PANEL LAYOUT)

CONTAINS:

COMMUNITY	NUMBER	PANEL	SUFFIX
NEW BRITAIN, CITY OF	090032	0492	F
NEWINGTON, TOWN OF	090033	0492	F

Notice to User: The **Map Number** shown below should be used when placing map orders; the **Community Number** shown above should be used on insurance applications for the subject community.

MAP NUMBER
09003C0492F

EFFECTIVE DATE:
SEPTEMBER 26, 2008

Federal Emergency Management Agency

This is an official copy of a portion of the above referenced flood map. It was extracted using F-MIT On-Line. This map does not reflect changes or amendments which may have been made subsequent to the date on the title block. For the latest product information about National Flood Insurance Program flood maps check the FEMA Flood Map Store at www.msc.fema.gov

Appendix P

Drainage Overview Map

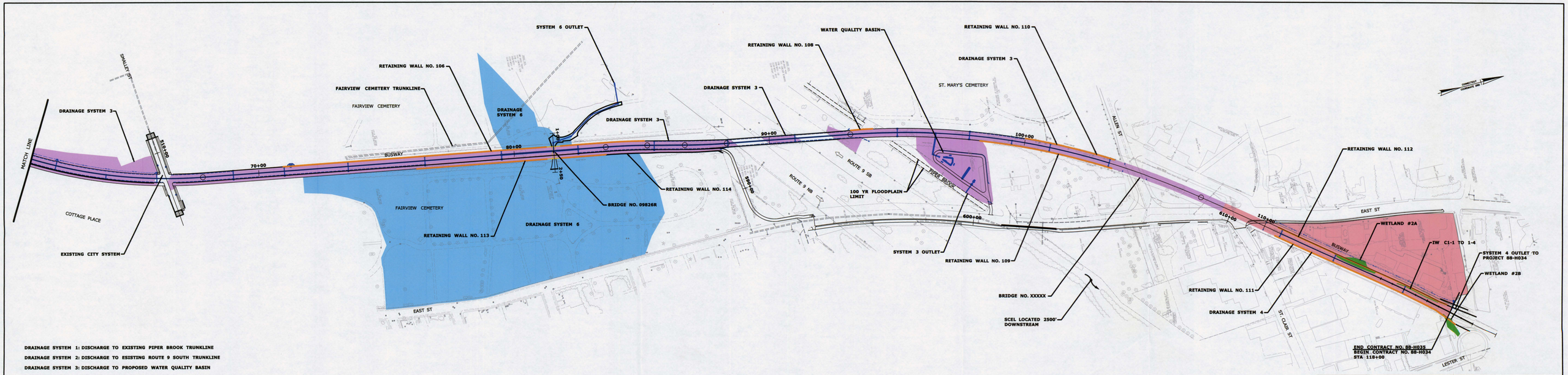

DRAINAGE SYSTEM 1: DISCHARGE TO EXISTING PIPER BROOK TRUNKLINE
DRAINAGE SYSTEM 2: DISCHARGE TO ESISTING ROUTE 9 SOUTH TRUNKLINE
DRAINAGE SYSTEM 3: DISCHARGE TO PROPOSED WATER QUALITY BASIN
DRAINAGE SYSTEM 4: DISCHARGE TO PROJECT NO. 88-H034
DRAINAGE SYSTEM 5: DISCHARGE TO ROUTE 72/9 TRUNKLINE
DRAINAGE SYSTEM 6: DISCHARGE TO EXISTING REMNANT OF PIPER BROOK
DRAINAGE SYSTEM 7: DISCHARGE TO EXISTING FAIRVIEW CEMETERY TRUNKLINE
BUSWAY OVER ROUTE 9 BRIDGE DECK DRAINAGE SYSTEM: DISCHARGE TO EXISTING ROUTE 9 SOUTH TRUNKLINE

OVERVIEW PLAN
88-H035 CORRIDOR

OCTOBER 2009
SCALE: 1" = 80'

URS
URS CORPORATION AES
500 ENTERPRISE DRIVE
ROCKY HILL, CT 06067
1-(860)-529-8882

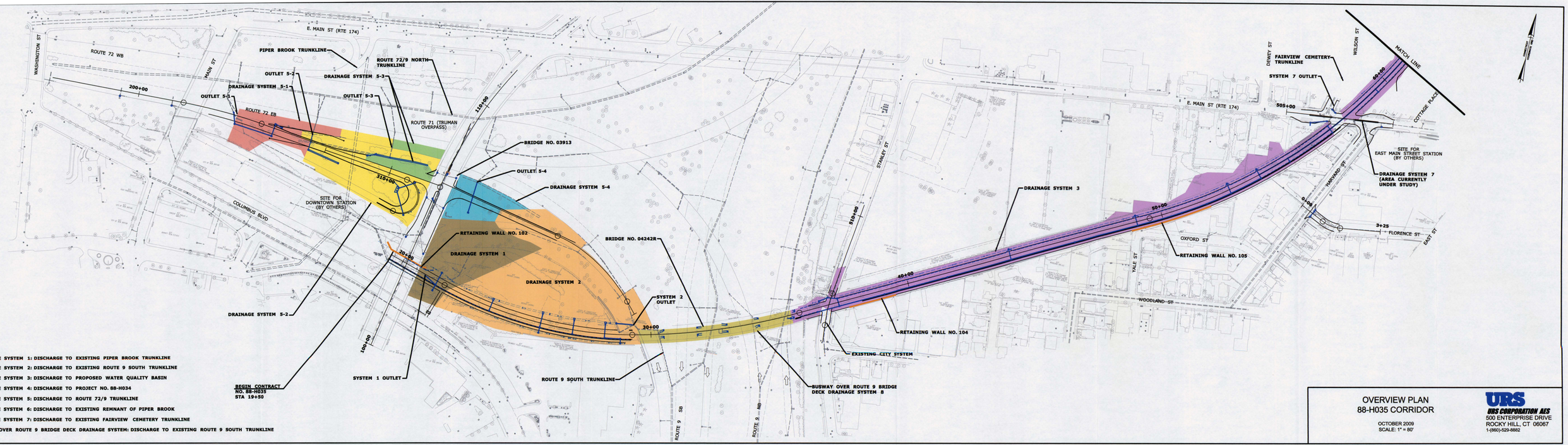

DRAINAGE SYSTEM 1: DISCHARGE TO EXISTING PIPER BROOK TRUNKLINE

DRAINAGE SYSTEM 2: DISCHARGE TO EXISTING ROUTE 9 SOUTH TRUNKLINE

DRAINAGE SYSTEM 3: DISCHARGE TO PROPOSED WATER QUALITY BASIN

DRAINAGE SYSTEM 4: DISCHARGE TO PROJECT NO. 88-H034

DRAINAGE SYSTEM 5: DISCHARGE TO ROUTE 72/9 TRUNKLINE

DRAINAGE SYSTEM 6: DISCHARGE TO EXISTING REMNANT OF PIPER BROOK

DRAINAGE SYSTEM 7: DISCHARGE TO EXISTING FAIRVIEW CEMETERY TRUNKLINE

BUSWAY OVER ROUTE 9 BRIDGE DECK DRAINAGE SYSTEM: DISCHARGE TO EXISTING ROUTE 9 SOUTH TRUNKLINE

OVERVIEW PLAN
88-H035 CORRIDOR

OCTOBER 2009
SCALE: 1" = 80'

URS
URS CORPORATION AES
500 ENTERPRISE DRIVE
ROCKY HILL, CT 06067
1-(860)-522-8862