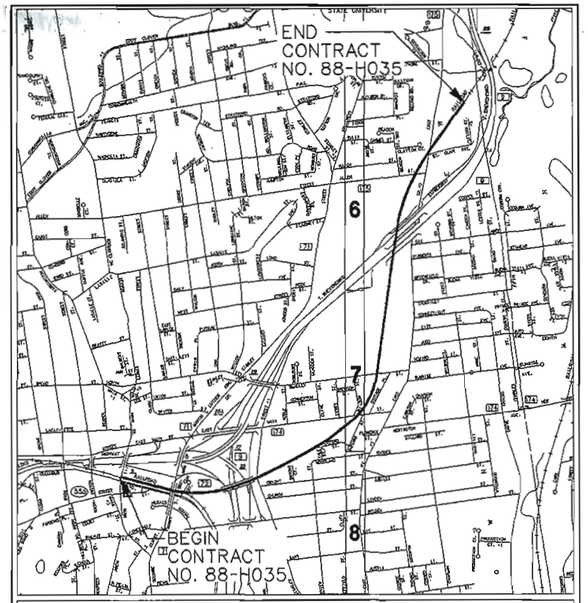

LOCATION PLAN
N.T.S.

CONNECTICUT DEPARTMENT OF TRANSPORTATION PLAN

FOR

CONSTRUCTION of
NEW BRITAIN - HARTFORD BUSWAY

IN THE TOWN(S) OF
NEW BRITAIN, CONNECTICUT

RECEIVED
AUG 12 2010
INLAND WATER RESOURCES DIVISION

FROM STA. 18+80 TO STA. 118+00 LENGTH 9,920 ft.

PERMIT SUBMISSION PLANS - NOT FOR CONSTRUCTION
JULY 27, 2010

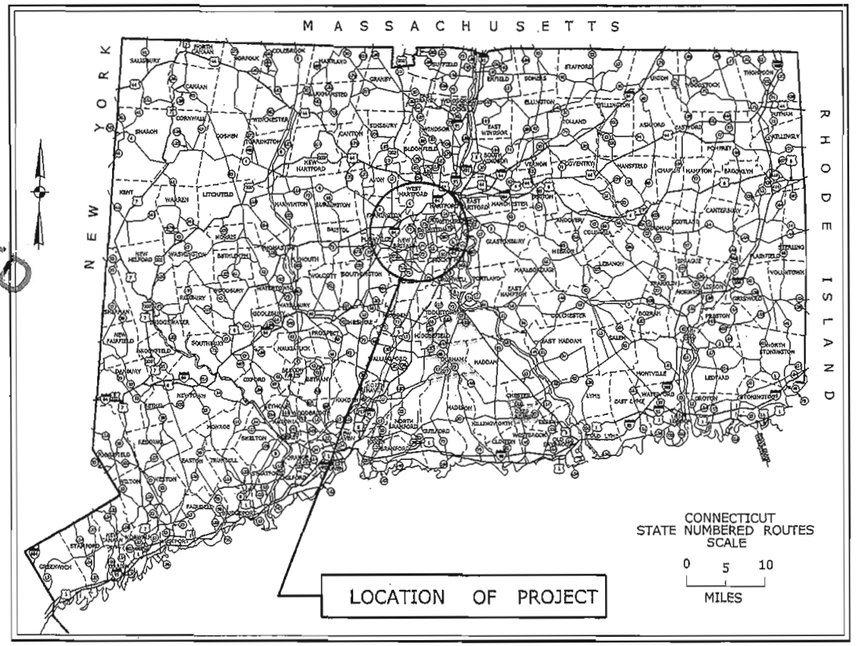

DESIGN SCALES
- PLAN 1 in. = 40 ft.
- PROFILE HOR. 1 in. = 40 ft. VERT. 1 in. = 4 ft.
- CROSS SECTIONS 1 in. = 5 ft.
- OTHER SCALES AS NOTED

SPECIFICATIONS, FORM 816 GOVERN INCLUDING SUPPLEMENT THERETO DATED JULY 2007
ALL ELEVATIONS ON THIS PROJECT BASED ON NGVD OF 1929
COORDINATES BASED ON CONNECTICUT COORDINATE SYSTEM NAD 83

FEDERAL AID PROJECT NO. _____ TO BE MAINTAINED BY THE STATE STATE PROJECT NO. 88-H035

Half Size

LIST OF DRAWING REVISIONS

SHEET NO.	DESCRIPTION	DATE	BY

STANDARD EXISTNG CONVENTIONS

Hedge Row; North Arrow W/No. Coor.; Edge Of Road; Dirt Road; BCLC; Granite Curb; Guide Rail; Concrete Median Barrier; Bit. Walk; Conc. Sidewalk; Railroad Tracks; Chain Link Fence; Rustic Fence; Pipe Fence; Board Fence; Water Edge; Stream; Ditch; TOWN LINE; Grid Arrow; Limit Of Marsh; Stone Wall; Ledge Outcrop; Inland Wetland Limits; STATE LINE; Power Line; Easement Line; Swamp; Building; Transmission Tower; Riprap; Tree Line; Shrub; Evergreen Tree; Deciduous Tree; Retaining Wall; Highway Line; Street Line; Property Line; Lot Line

Border VERSION 10/19/07

LIST OF DRAWINGS

DWG. NO.	TITLE	SHEET NO.	DWG. NO.	STANDARD DRAWINGS	F.H.W.A.
	VOLUME 1	1			
TSH-01	TITLE SHEET				
INX-01	INDEX PLAN				
TYP-01	TYPICAL SECTIONS				
PLN-01	ROADWAY PLANS				
PRO-01	PROFILES				
DRG-01	DRAINAGE PLANS				
SED-01	SEDIMENTATION CONTROL PLANS				
XSC-001	CRITICAL CROSS SECTIONS				
S-1	STRUCTURES - RETAINING WALL No. 111				

CONNECTICUT DEPARTMENT OF TRANSPORTATION BIDDING AND OTHER INFORMATION AND DOCUMENTS WHICH ARE OBTAINED THROUGH THE INTERNET WORLD WIDE WEB SITES OR OTHER SOURCES ARE NOT TO BE CONSTRUED TO BE OFFICIAL INFORMATION FOR THE PURPOSES OF BIDDING OR CONDUCTING OTHER BUSINESS WITH THE DEPARTMENT.

IT IS THE RESPONSIBILITY OF EACH BIDDER AND ALL OTHER INTERESTED PARTIES TO OBTAIN ALL BIDDING RELATED INFORMATION AND DOCUMENTS FROM OFFICIAL SOURCES WITHIN THE DEPARTMENT.

PERSONS AND/OR ENTITIES WHICH REPRODUCE AND/OR MAKE SUCH INFORMATION AVAILABLE BY ANY MEANS ARE NOT AUTHORIZED BY THE DEPARTMENT TO DO SO AND MAY BE LIABLE FOR CLAIMS RESULTING FROM THE DISSEMINATION OF UNOFFICIAL, INCOMPLETE AND/OR INACCURATE INFORMATION.

THE DESIGN APPEARS TO CONFORM TO APPLICABLE CRITERIA. APPROVAL IS NOT TO BE CONSTRUED TO MEAN THAT ALL ASPECTS OF THE DESIGN HAVE BEEN PERSONALLY CHECKED BY THE UNDERSIGNED.

SUBMITTED _____ 2007
TRANSPORTATION PRINCIPAL ENGINEER

APPROVAL RECOMMENDED _____ 2007
MANAGER OF STATE DESIGN - JAMES H. NORMAN

APPROVED _____ 2007
TRANSPORTATION ENGINEERING ADMINISTRATOR - MICHAEL W. LONBERGAN

DESIGNED BY:
URS
URS CORPORATION AES
500 ENTERPRISE DRIVE
ROCKY HILL, CT 06067

STATE OF CONNECTICUT
THOMAS A. WALSH JR.
No. 12846
LICENSED PROFESSIONAL ENGINEER

PERMIT SUBMISSION PLANS

F.H.W.A. REGION NO.	STATE	TOWN	FED. AID PROJ. NO.	PROJ. NO.	YEAR	ROUTE NO.	SHEET NO.	TOTAL SHEETS
1	CT	-	-	88-H035	-	-	1	

P:\General\Outgoing\ConnDOT\2010_0727-GEP Permit\HW_HSH_088_H035_TSH-01P.dgn

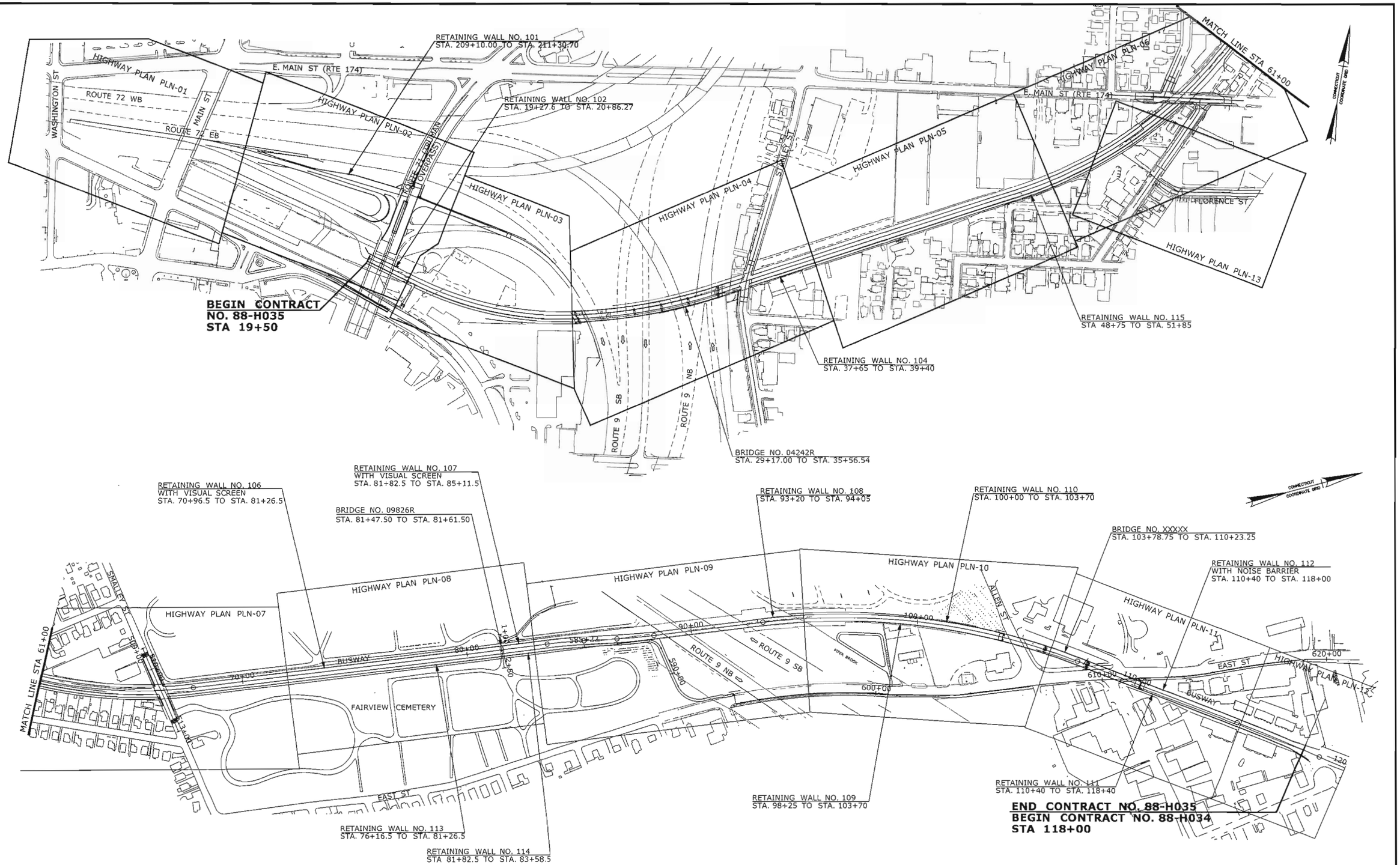

REV.	DATE	REVISION DESCRIPTION	SHEET NO.
-	-	-	-
-	-	-	-
-	-	-	-
-	-	-	-
-	-	-	-
-	-	-	-

THE INFORMATION, INCLUDING ESTIMATED QUANTITIES OF WORK, SHOWN ON THESE SHEETS IS BASED ON LIMITED INVESTIGATIONS BY THE STATE AND IS IN NO WAY WARRANTED TO INDICATE THE CONDITIONS OF ACTUAL QUANTITIES OF WORK WHICH WILL BE REQUIRED.

Plotted: 7/28/2010

DESIGNER/DRAFTER: P. GILKEY
CHECKED BY: T. WALB
SCALE IN FEET 0 200 400
SCALE 1"=200'

STATE OF CONNECTICUT
DEPARTMENT OF TRANSPORTATION

Filename: P:\General\Outgoing\ConnDOT\2010_0727-DEP Permit\HW_MSH_088_H035_INX-01.dgn

SIGNATURE/BLOCK: URS CORPORATION AES
APPROVED BY: -
DATE: -

PROJECT TITLE: NEW BRITAIN - HARTFORD BUSWAY

TOWN: NEW BRITAIN
DRAWING TITLE: INDEX PLAN

PROJECT NO. 88-H035
DRAWING NO. INX-01
SHEET NO. S

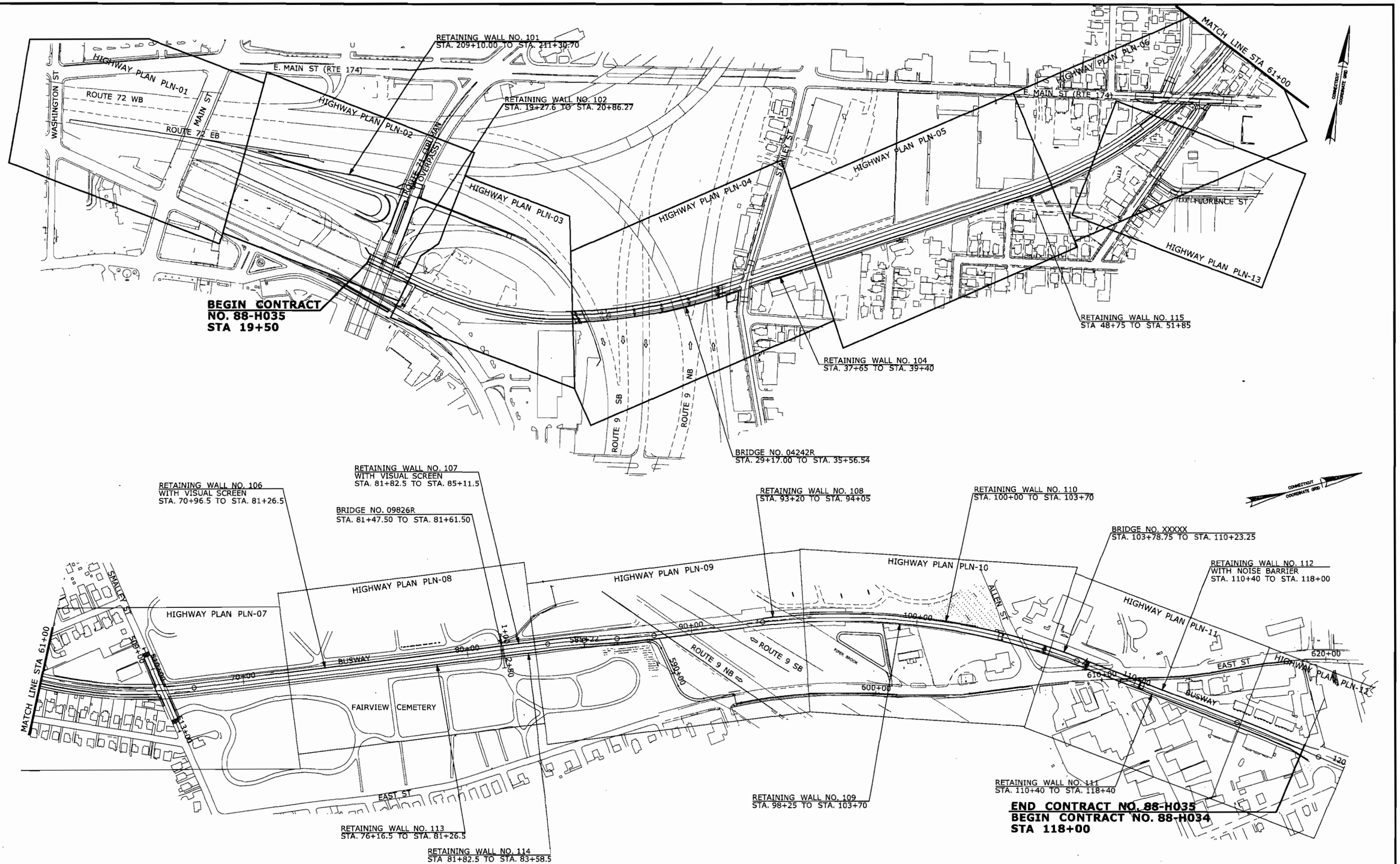

REV.	DATE	REVISION DESCRIPTION	SHEET NO.
-	-	-	-
-	-	-	-
-	-	-	-
-	-	-	-
-	-	-	-
-	-	-	-
-	-	-	-

THE INFORMATION, INCLUDING ESTIMATED QUANTITIES OF WORK, SHOWN ON THESE SHEETS IS BASED ON LIMITED INVESTIGATIONS BY THE STATE AND IS IN NO WAY WARRANTED TO INDICATE THE CONDITIONS OF ACTUAL QUANTITIES OF WORK WHICH WILL BE REQUIRED.

Plotted: 7/28/2010

DESIGNER/DRAFTER: P. GILKEY
CHECKED BY: T. WALB
SCALE IN FEET 0 200 400
SCALE 1"=200'

STATE OF CONNECTICUT
DEPARTMENT OF TRANSPORTATION

Filename: P:\General\Outgoing\ConnDOT\2010_0727-DEP Permit\HW_MSH_088_H035_INX-01.dgn

SIGNATURE/BLOCK: URS CORPORATION AES
APPROVED BY: -
DATE: -

PROJECT TITLE: NEW BRITAIN - HARTFORD BUSWAY

TOWN: NEW BRITAIN

DRAWING TITLE: INDEX PLAN

PROJECT NO. 88-H035
DRAWING NO. INX-01
SHEET NO. S

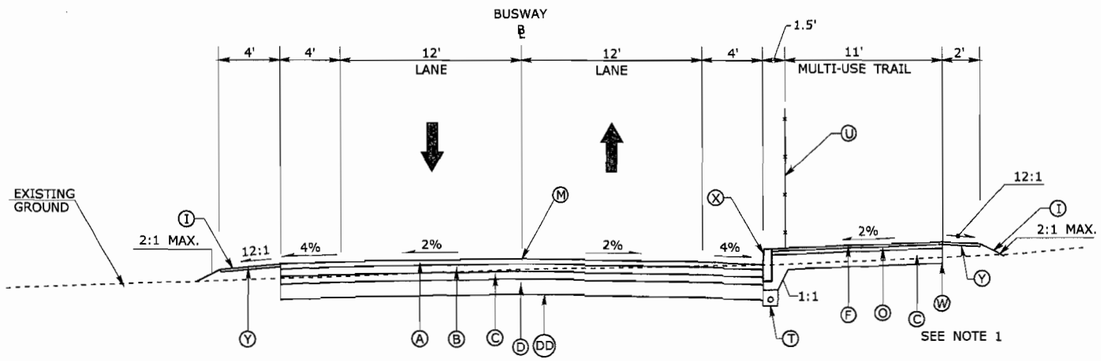

BUSWAY MAINLINE - NORMAL SECTION
(WITH ADJACENT MULTI-USE TRAIL ON RIGHT)

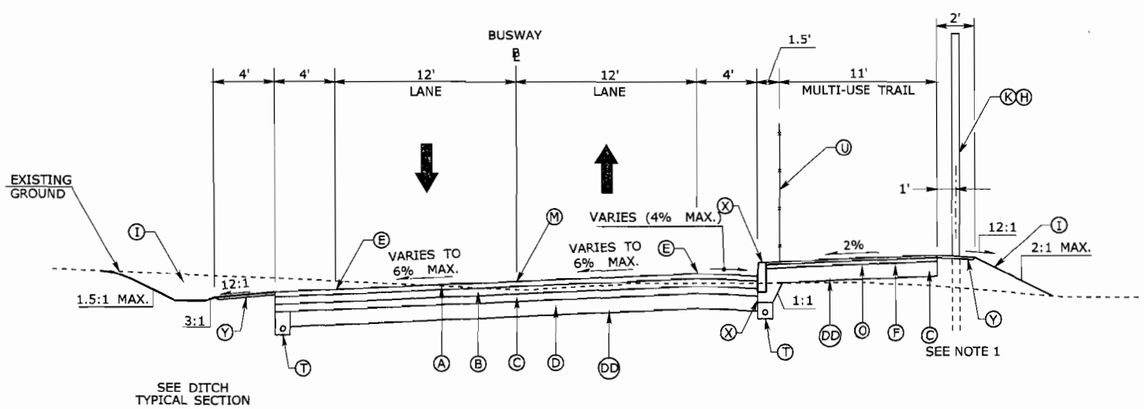

BUSWAY MAINLINE - SUPERELEVATED SECTION
(WITH ADJACENT MULTI-USE TRAIL ON RIGHT)

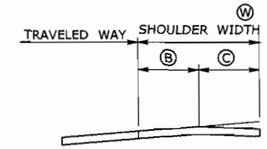

Ⓦ	Ⓑ	Ⓒ
4'	0'-4'	0'
4'	0'-4'	4'

1. MAY REQUIRE ATTACHABLE EXTENSIONS OR CUT-OFF PLATES ON PAVING EQUIPMENT.
2. WHERE S_2 IS FLATTER THAN 2% THE CONTRACTOR SHALL VERIFY THE CROSS SLOPE AT EACH 25' INTERVAL (PAYMENT SHALL BE INCLUDED IN THE COST OF THE BITUMINOUS CONCRETE PAY ITEM - THERE WILL BE NO DIRECT PAYMENT.)
3. S_2 SHALL BE 1% MINIMUM.

SHOULDER TREATMENT HIGH SIDE OF BANK

LEGEND:

- Ⓐ 4" SUPERPAVE 0.5" (PLACED IN TWO EQUAL LIFTS)
- Ⓑ 6" SUPERPAVE 1.0"
- Ⓒ 6" PROCESSED AGGREGATE BASE
- Ⓓ 10" SUBBASE
- Ⓔ POINT OF BANK APPLICATION
- Ⓕ 1.25" SUPERPAVE 0.25"
- Ⓖ VERTICAL FACE P.C.B.C. (21" X 45")
- Ⓗ SPLIT RAIL FENCE (SEE PLANS FOR LOCATIONS)
- Ⓘ TURF ESTABLISHMENT
- Ⓙ 10" CONCRETE PAVEMENT
- Ⓚ NOISE BARRIER WALL (SEE PLANS FOR LOCATIONS)
- Ⓛ MBR (TYPE R-B 350 10 GA.) SEE PLANS FOR LOCATIONS
- Ⓜ POINT OF GRADE APPLICATION
- Ⓝ SPECIAL CURBING
- Ⓞ 1.5" SUPERPAVE 0.375"
- Ⓟ BITUMINOUS CONCRETE PARK CURBING
- Ⓠ RETAINING WALL
- Ⓡ 4" SUPERPAVE 1.0"
- Ⓢ VISUAL SCREEN (TOP TO BE 11'-6" ABOVE BUSWAY BASELINE ELEVATION)
- Ⓣ 4" EDGEDRAIN
- Ⓤ ORNAMENTAL METAL FENCE (5' HIGH)
- Ⓥ 4" CONCRETE
- Ⓦ GRANULAR FILL
- Ⓧ CONCRETE CURBING
- Ⓨ FURNISHING & PLACING TOPSOIL
- Ⓩ CONCRETE SIDEWALK
- ⒹⒹ FORMATION OF SUBGRADE

NOTES:

1. PROCESSED AGGREGATE BASE THICKNESS TO BE INCREASED TO 12 INCHES IN AREAS OF POOR DRAINAGE (VISIBLE STANDING WATER / HIGH WATER TABLE) OR SOIL CONDITIONS, WHERE THE STABILITY OF THE SUBGRADE FOR PLACEMENT OF HOT-MIX ASPHALT (HMA) AFTER PLACEMENT OF A SINGLE 6-INCH LIFT OF PROCESSED AGGREGATE BASE IS SUSPECT. THIS DETERMINATION IS TO BE MADE BY THE ENGINEER IN THE FIELD AS NEEDED AT THE TIME OF CONSTRUCTION. IN EXTREME SUCH CASES (WHERE THE SUBGRADE CANNOT SUPPORT THE CONSTRUCTION EQUIPMENT), INCREASE THE PROCESSED AGGREGATE BASE THICKNESS TO 24 INCHES, TO BE PLACED OVER A SUITABLE GEOTEXTILE MATERIAL, AS DETERMINED AND DIRECTED BY THE ENGINEER.
2. STATION PLATFORM FOR INFORMATION ONLY.

FINAL DESIGN REVIEW

REV.	DATE	REVISION DESCRIPTION	SHEET NO.
-	-	-	-
-	-	-	-
-	-	-	-
-	-	-	-
-	-	-	-
-	-	-	-

THE INFORMATION, INCLUDING ESTIMATED QUANTITIES OF WORK, SHOWN ON THESE SHEETS IS BASED ON LIMITED INVESTIGATIONS BY THE STATE AND IS IN NO WAY WARRANTED TO INDICATE THE CONDITIONS OF ACTUAL QUANTITIES OF WORK WHICH WILL BE REQUIRED.

Plotted: 7/28/2010

DESIGNER/DRAFTER: P. GILKEY
CHECKED BY: T. WALB
SCALE AS NOTED

STATE OF CONNECTICUT
DEPARTMENT OF TRANSPORTATION

Filename: P:\General\Outgoing\ConnDOT\2010.0727-DEP Permit\HW_MSH_088_H035_TYP-01.dgn

SIGNATURE/BLOCK: URS CORPORATION AES
APPROVED BY: -
DATE: -

PROJECT TITLE: NEW BRITAIN - HARTFORD BUSWAY

TOWN: NEW BRITAIN
DRAWING TITLE: TYPICAL SECTIONS

PROJECT NO. 88-H035
DRAWING NO. TYP-01
SHEET NO. S

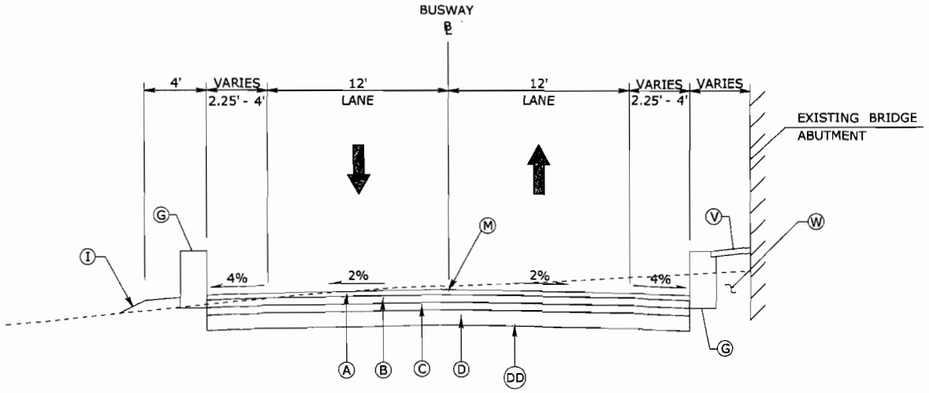

BUSWAY MAINLINE - NORMAL SECTION
(WITHOUT ADJACENT MULTI-USE TRAIL)

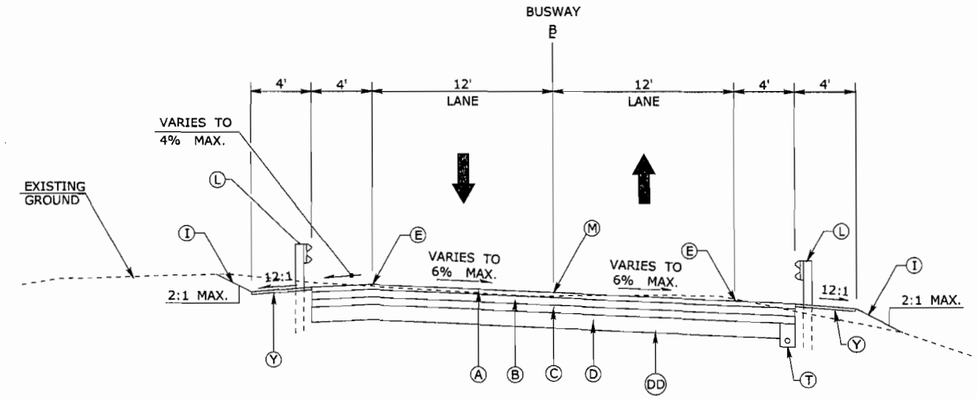

BUSWAY MAINLINE - SUPERELEVATED SECTION
(WITHOUT ADJACENT MULTI-USE TRAIL)

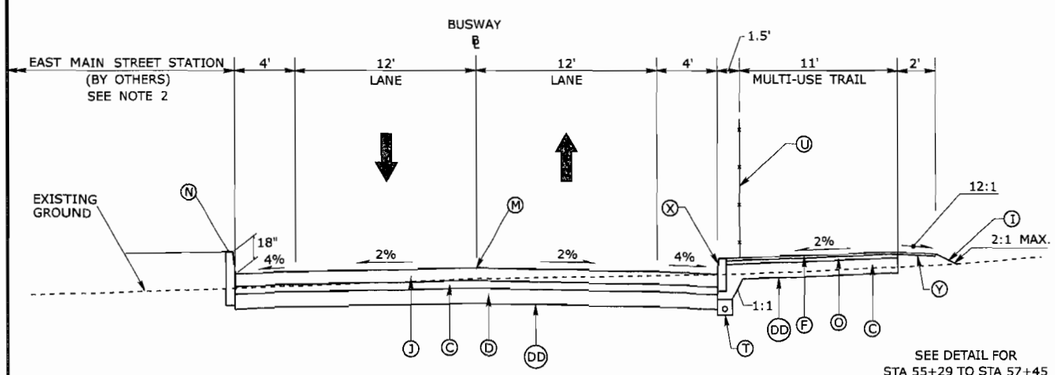

BUSWAY MAINLINE AT
EAST MAIN STREET STATION

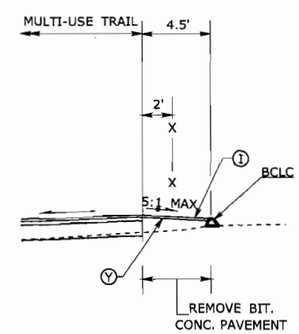

DETAIL STA 55+29 TO STA 57+45

LEGEND:

- (A) 4" SUPERPAVE 0.5" (PLACED IN TWO EQUAL LIFTS)
- (B) 6" SUPERPAVE 1.0"
- (C) 6" PROCESSED AGGREGATE BASE
- (D) 10" SUBBASE
- (E) POINT OF BANK APPLICATION
- (F) 1.25" SUPERPAVE 0.25"
- (G) VERTICAL FACE P.C.B.C. (21" X 45")
- (H) SPLIT RAIL FENCE (SEE PLANS FOR LOCATIONS)
- (I) TURF ESTABLISHMENT
- (J) 10" CONCRETE PAVEMENT
- (K) NOISE BARRIER WALL (SEE PLANS FOR LOCATIONS)
- (L) MBR (TYPE R-B 350 10 GA.) SEE PLANS FOR LOCATIONS
- (M) POINT OF GRADE APPLICATION
- (N) SPECIAL CURBING
- (O) 1.5" SUPERPAVE 0.375"
- (P) BITUMINOUS CONCRETE PARK CURBING
- (Q) RETAINING WALL
- (R) 4" SUPERPAVE 1.0"
- (S) VISUAL SCREEN (TOP TO BE 11'-6" ABOVE BUSWAY BASELINE ELEVATION)
- (T) 4" EDGEDRAIN
- (U) ORNAMENTAL METAL FENCE (5' HIGH)
- (V) 4" CONCRETE
- (W) GRANULAR FILL
- (X) CONCRETE CURBING
- (Y) FURNISHING & PLACING TOPSOIL
- (Z) CONCRETE SIDEWALK
- (DD) FORMATION OF SUBGRADE

NOTES:

1. PROCESSED AGGREGATE BASE THICKNESS TO BE INCREASED TO 12 INCHES IN AREAS OF POOR DRAINAGE (VISIBLE STANDING WATER / HIGH WATER TABLE) OR SOIL CONDITIONS, WHERE THE STABILITY OF THE SUBGRADE FOR PLACEMENT OF HOT-MIX ASPHALT (HMA) AFTER PLACEMENT OF A SINGLE 6-INCH LIFT OF PROCESSED AGGREGATE BASE IS SUSPECT. THIS DETERMINATION IS TO BE MADE BY THE ENGINEER IN THE FIELD AS NEEDED AT THE TIME OF CONSTRUCTION. IN EXTREME SUCH CASES (WHERE THE SUBGRADE CANNOT SUPPORT THE CONSTRUCTION EQUIPMENT), INCREASE THE PROCESSED AGGREGATE BASE THICKNESS TO 24 INCHES, TO BE PLACED OVER A SUITABLE GEOTEXTILE MATERIAL, AS DETERMINED AND DIRECTED BY THE ENGINEER.
2. STATION PLATFORM FOR INFORMATION ONLY.

FINAL DESIGN REVIEW

REV.	DATE	REVISION DESCRIPTION	SHEET NO.
-	-	-	-
-	-	-	-
-	-	-	-
-	-	-	-
-	-	-	-
-	-	-	-

THE INFORMATION, INCLUDING ESTIMATED QUANTITIES OF WORK, SHOWN ON THESE SHEETS IS BASED ON LIMITED INVESTIGATIONS BY THE STATE AND IS IN NO WAY WARRANTED TO INDICATE THE CONDITIONS OF ACTUAL QUANTITIES OF WORK WHICH WILL BE REQUIRED.

Plotted: 7/28/2010

DESIGNER/DRAFTER: P. GILKEY
CHECKED BY: T. WALB
SCALE AS NOTED

STATE OF CONNECTICUT
DEPARTMENT OF TRANSPORTATION

Filename: P:\General\Outgoing\ConnDOT\2010.0727-DEP Permit\HW_MSH_088.H035.TYP-02.dgn

SIGNATURE/BLOCK: URS CORPORATION AES
APPROVED BY: -
DATE: -

PROJECT TITLE: NEW BRITAIN - HARTFORD BUSWAY

TOWN: NEW BRITAIN
DRAWING TITLE: TYPICAL SECTIONS

PROJECT NO. 88-H035
DRAWING NO. TYP-02
SHEET NO. S

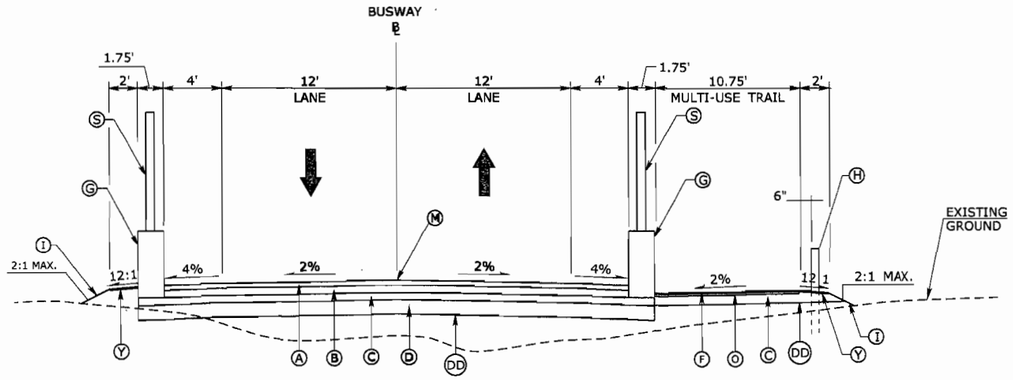

BUSWAY MAINLINE - NORMAL SECTION (WITH VISUAL SCREENS)

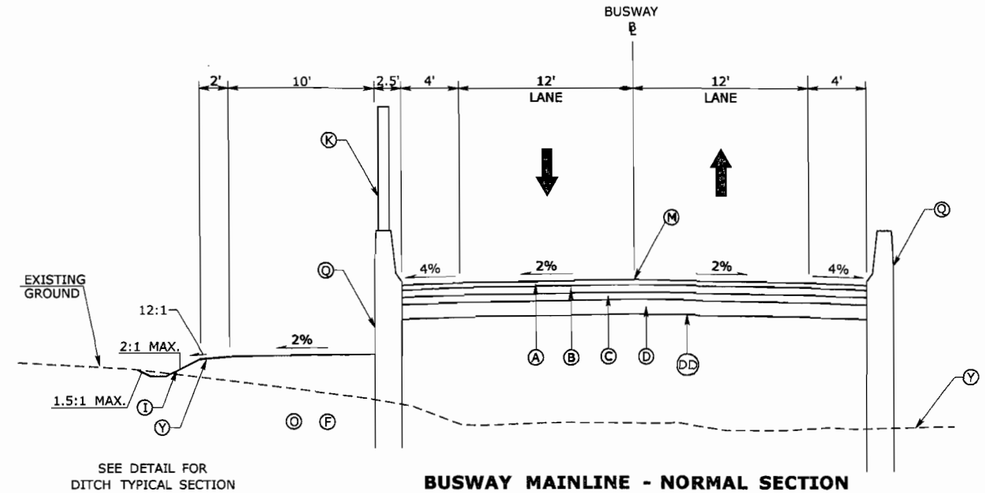

SEE DETAIL FOR DITCH TYPICAL SECTION

BUSWAY MAINLINE - NORMAL SECTION (WITH ADJACENT RETAINING WALLS)

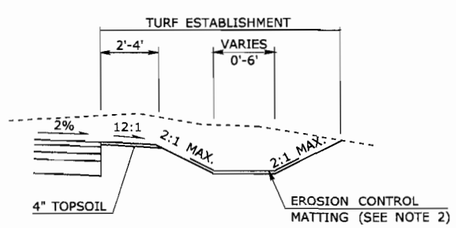

GRASS LINED CHANNEL/DITCH

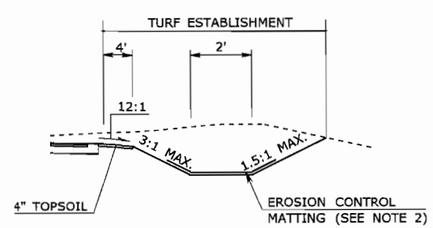

GRASS LINED DITCH

CHANNEL/DITCH TYPICAL SECTIONS

LEGEND:

- (A) 4" SUPERPAVE 0.5" (PLACED IN TWO EQUAL LIFTS)
- (B) 6" SUPERPAVE 1.0"
- (C) 6" PROCESSED AGGREGATE BASE
- (D) 10" SUBBASE
- (E) POINT OF BANK APPLICATION
- (F) 1.25" SUPERPAVE 0.25"
- (G) VERTICAL FACE P.C.B.C. (21" X 45")
- (H) SPLIT RAIL FENCE (SEE PLANS FOR LOCATIONS)
- (I) TURF ESTABLISHMENT
- (J) 10" CONCRETE PAVEMENT
- (K) NOISE BARRIER WALL (SEE PLANS FOR LOCATIONS)
- (L) MBR (TYPE R-B 350 10 GA.) SEE PLANS FOR LOCATIONS
- (M) POINT OF GRADE APPLICATION
- (N) SPECIAL CURBING
- (O) 1.5" SUPERPAVE 0.375"
- (P) BITUMINOUS CONCRETE PARK CURBING
- (Q) RETAINING WALL
- (R) 4" SUPERPAVE 1.0"
- (S) VISUAL SCREEN (TOP TO BE 11'-6" ABOVE BUSWAY BASELINE ELEVATION)
- (T) 4" EDGEDRAIN
- (U) ORNAMENTAL METAL FENCE (5' HIGH)
- (V) 4" CONCRETE
- (W) GRANULAR FILL
- (X) CONCRETE CURBING
- (Y) FURNISHING & PLACING TOPSOIL
- (Z) CONCRETE SIDEWALK
- (DD) FORMATION OF SUBGRADE

NOTES:

1. PROCESSED AGGREGATE BASE THICKNESS TO BE INCREASED TO 12 INCHES IN AREAS OF POOR DRAINAGE (VISIBLE STANDING WATER / HIGH WATER TABLE) OR SOIL CONDITIONS, WHERE THE STABILITY OF THE SUBGRADE FOR PLACEMENT OF HOT-MIX ASPHALT (HMA) AFTER PLACEMENT OF A SINGLE 6-INCH LIFT OF PROCESSED AGGREGATE BASE IS SUSPECT. THIS DETERMINATION IS TO BE MADE BY THE ENGINEER IN THE FIELD AS NEEDED AT THE TIME OF CONSTRUCTION. IN EXTREME SUCH CASES (WHERE THE SUBGRADE CANNOT SUPPORT THE CONSTRUCTION EQUIPMENT), INCREASE THE PROCESSED AGGREGATE BASE THICKNESS TO 24 INCHES, TO BE PLACED OVER A SUITABLE GEOTEXTILE MATERIAL, AS DETERMINED AND DIRECTED BY THE ENGINEER.
2. SEE SEDIMENTATION AND EROSION CONTROL PLAN SHEETS FOR TYPE AND WIDTH OF TEMPORAY EROSION CONTROL MATTING. SEE DRAINAGE PLAN SHEETS FOR TYPE AND WIDTH OF PERMANENT EROSION CONTROL MATTING.

FINAL DESIGN REVIEW

REV.	DATE	REVISION DESCRIPTION	SHEET NO.
-	-	-	-
-	-	-	-
-	-	-	-
-	-	-	-
-	-	-	-
-	-	-	-

THE INFORMATION, INCLUDING ESTIMATED QUANTITIES OF WORK, SHOWN ON THESE SHEETS IS BASED ON LIMITED INVESTIGATIONS BY THE STATE AND IS IN NO WAY WARRANTED TO INDICATE THE CONDITIONS OF ACTUAL QUANTITIES OF WORK WHICH WILL BE REQUIRED.

Plotted: 7/28/2010

DESIGNER/DRAFTER: P. GILKEY
CHECKED BY: T. WALB
SCALE AS NOTED

STATE OF CONNECTICUT
DEPARTMENT OF TRANSPORTATION

Filename: P:\General\Outgoing\ConnDOT\2010.0727-DEP Permit\HW_MSH_088_H035_TYP-03.dgn

SIGNATURE/BLOCK: URS CORPORATION AES
APPROVED BY: - DATE: -

PROJECT TITLE: NEW BRITAIN - HARTFORD BUSWAY

TOWN: NEW BRITAIN
DRAWING TITLE: TYPICAL SECTIONS

PROJECT NO. 88-H035
DRAWING NO. TYP-03
SHEET NO. S

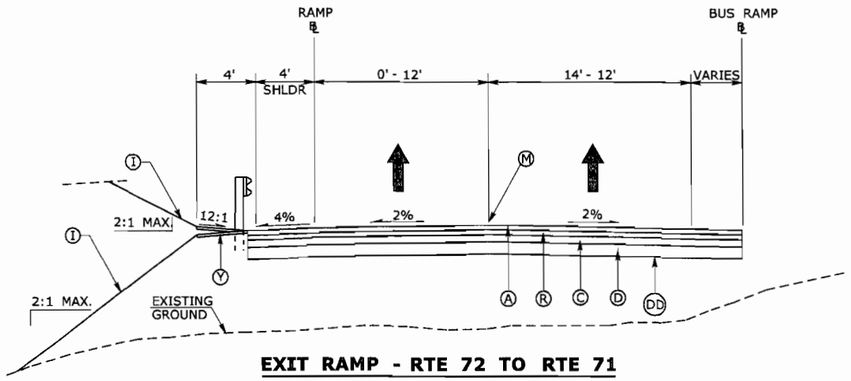

EXIT RAMP - RTE 72 TO RTE 71

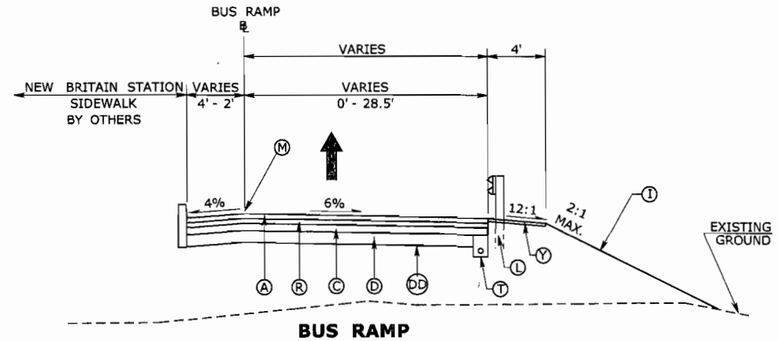

BUS RAMP

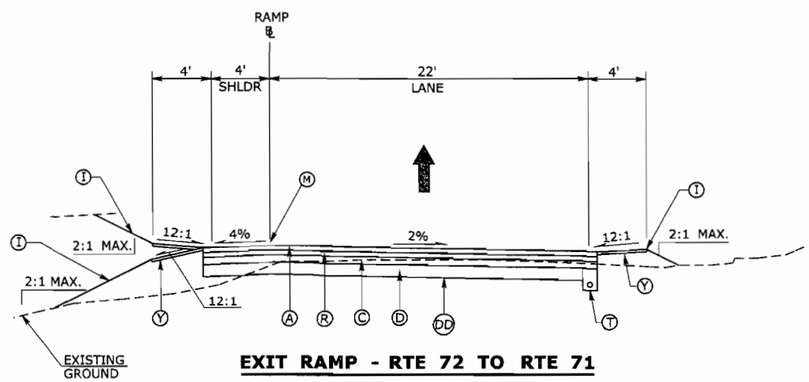

EXIT RAMP - RTE 72 TO RTE 71

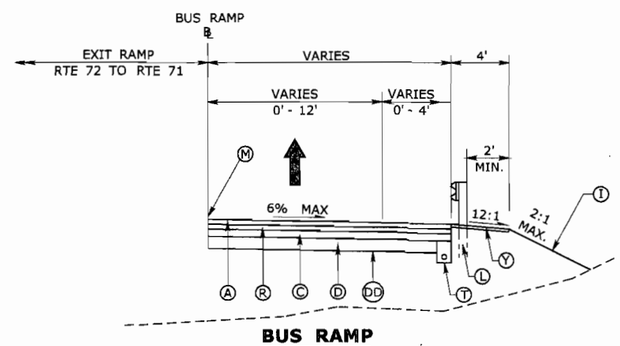

BUS RAMP

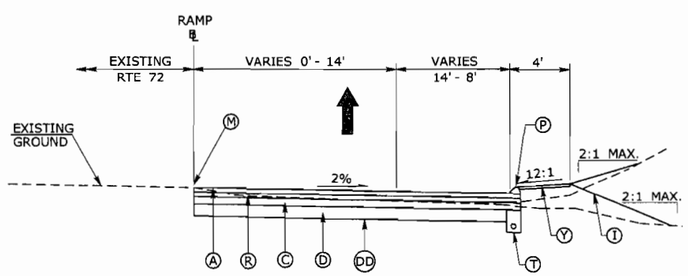

EXIT RAMP - RTE 72 TO RTE 71

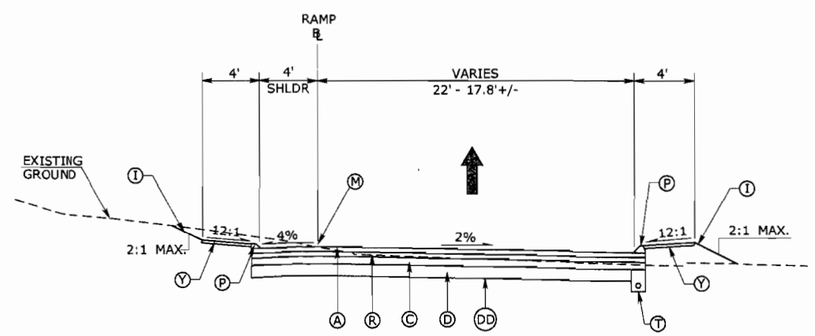

ENTRANCE RAMP - RTE 71 TO RTE 9 SOUTH BOUND

LEGEND:

- (A) 4" SUPERPAVE 0.5" (PLACED IN TWO EQUAL LIFTS)
- (B) 6" SUPERPAVE 1.0"
- (C) 6" PROCESSED AGGREGATE BASE
- (D) 10" SUBBASE
- (E) POINT OF BANK APPLICATION
- (F) 1.25" SUPERPAVE 0.25"
- (G) VERTICAL FACE P.C.B.C. (21" X 45")
- (H) SPLIT RAIL FENCE (SEE PLANS FOR LOCATIONS)
- (I) TURF ESTABLISHMENT
- (J) 10" CONCRETE PAVEMENT
- (K) NOISE BARRIER WALL (SEE PLANS FOR LOCATIONS)
- (L) MBR (TYPE R-B 350 10 GA.) SEE PLANS FOR LOCATIONS
- (M) POINT OF GRADE APPLICATION
- (N) SPECIAL CURBING
- (O) 1.5" SUPERPAVE 0.375"
- (P) BITUMINOUS CONCRETE PARK CURBING
- (Q) RETAINING WALL
- (R) 4" SUPERPAVE 1.0"
- (S) VISUAL SCREEN (TOP TO BE 11'-6" ABOVE BUSWAY BASELINE ELEVATION)
- (T) 4" EDGEDRAIN
- (U) ORNAMENTAL METAL FENCE (5' HIGH)
- (V) 4" CONCRETE
- (W) GRANULAR FILL
- (X) CONCRETE CURBING
- (Y) FURNISHING & PLACING TOPSOIL
- (Z) CONCRETE SIDEWALK
- (DD) FORMATION OF SUBGRADE

NOTES:

HIGH-SIDE OF BANK SHOULDER CROSS SLOPE VARIES (4% MAXIMUM) - 7% MAXIMUM DIFFERENCE BETWEEN TRAVEL LANE AND SHOULDER.

FINAL DESIGN REVIEW

REV.	DATE	REVISION DESCRIPTION	SHEET NO.
-	-	-	-
-	-	-	-
-	-	-	-
-	-	-	-
-	-	-	-
-	-	-	-

THE INFORMATION, INCLUDING ESTIMATED QUANTITIES OF WORK, SHOWN ON THESE SHEETS IS BASED ON LIMITED INVESTIGATIONS BY THE STATE AND IS IN NO WAY WARRANTED TO INDICATE THE CONDITIONS OF ACTUAL QUANTITIES OF WORK WHICH WILL BE REQUIRED.

Plotted: 7/28/2010

DESIGNER/DRAFTER: P. GILKEY
CHECKED BY: T. WALB
SCALE AS NOTED

STATE OF CONNECTICUT
DEPARTMENT OF TRANSPORTATION

Filename: P:\General\Outgoing\ConnDOT\2010_0727-DEP Permit\HW_MSH_088_H035_TYP-04.dgn

SIGNATURE/BLOCK: URS CORPORATION AES
APPROVED BY: -
DATE: -

PROJECT TITLE: NEW BRITAIN - HARTFORD BUSWAY

TOWN: NEW BRITAIN

DRAWING TITLE: TYPICAL SECTIONS

PROJECT NO. 88-H035
DRAWING NO. TYP-04
SHEET NO. S

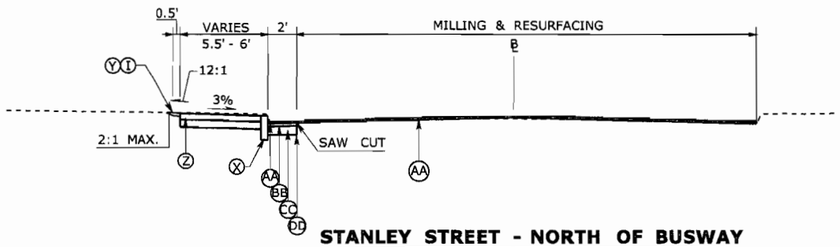

STANLEY STREET - NORTH OF BUSWAY

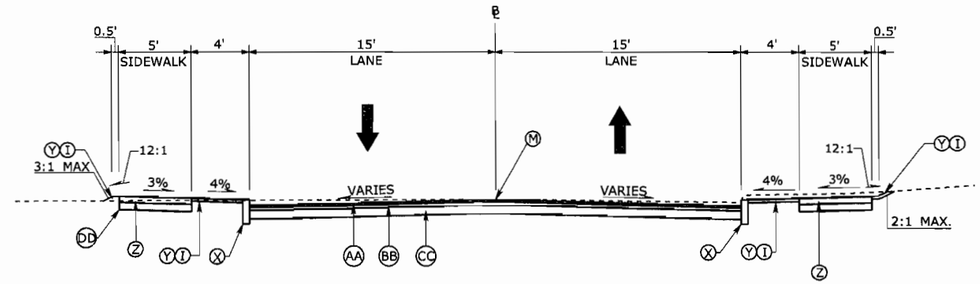

SMALLEY STREET

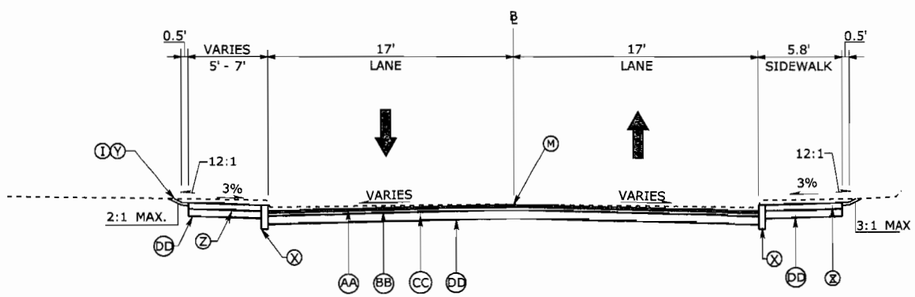

STANLEY STREET - SOUTH OF BUSWAY

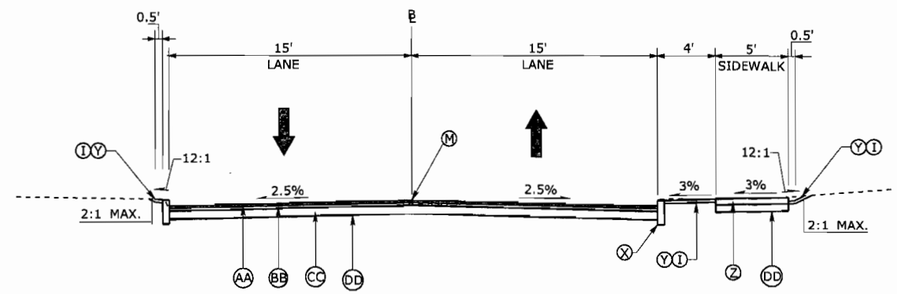

FLORENCE STREET

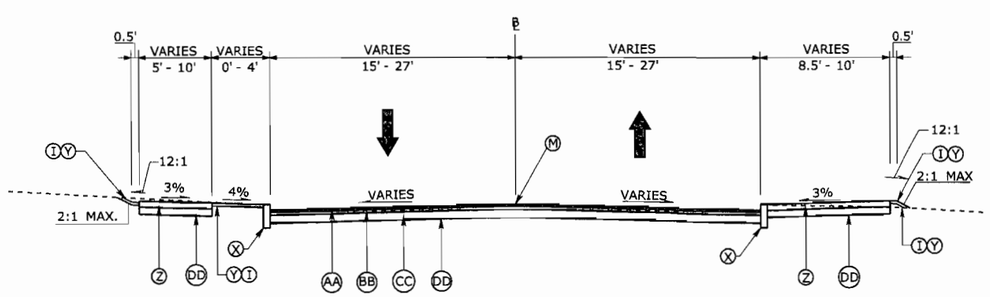

EAST MAIN STREET

LEGEND:

- (A) 4" SUPERPAVE 0.5" (PLACED IN TWO EQUAL LIFTS)
- (B) 6" SUPERPAVE 1.0"
- (C) 6" PROCESSED AGGREGATE BASE
- (D) 10" SUBBASE
- (E) POINT OF BANK APPLICATION
- (F) 1.25" SUPERPAVE 0.25"
- (G) VERTICAL FACE P.C.B.C. (21" X 45")
- (H) SPLIT RAIL FENCE (SEE PLANS FOR LOCATIONS)
- (I) TURF ESTABLISHMENT
- (J) 10" CONCRETE PAVEMENT
- (K) NOISE BARRIER WALL (SEE PLANS FOR LOCATIONS)
- (L) MBR (TYPE R-B 350 10 GA.) SEE PLANS FOR LOCATIONS
- (M) POINT OF GRADE APPLICATION
- (N) SPECIAL CURBING
- (O) 1.5" SUPERPAVE 0.375"
- (P) BITUMINOUS CONCRETE PARK CURBING
- (Q) RETAINING WALL
- (R) 4" SUPERPAVE 1.0"
- (S) VISUAL SCREEN (TOP TO BE 11'-6" ABOVE BUSWAY BASELINE ELEVATION)
- (T) 4" EDGEDRAIN
- (U) ORNAMENTAL METAL FENCE (5' HIGH)
- (V) 4" CONCRETE
- (W) GRANULAR FILL
- (X) CONCRETE CURBING
- (Y) FURNISHING & PLACING TOPSOIL
- (Z) CONCRETE SIDEWALK
- (DD) FORMATION OF SUBGRADE
- (AA) 1.5" SUPERPAVE 0.375"
- (BB) 2.5" SUPERPAVE 0.5"
- (CC) 7" PROCESSED AGGREGATE BASE

NOTES:

1. TYPICAL SHOULDER WIDTH IS 4'. SHOULDER WIDTHS OF LESS THAN 4' ARE USED IN RESTRICTIVE LOCATIONS - SEE PLANS FOR LOCATIONS.
2. HIGH-SIDE OF BANK SHOULDER CROSS SLOPE VARIES (4% MAXIMUM) - 7% MAXIMUM DIFFERENCE BETWEEN TRAVEL LANE AND SHOULDER.
3. LOW-SIDE OF BANK SHOULDER CROSS SLOPE VARIES (4% MINIMUM).

FINAL DESIGN REVIEW

REV.	DATE	REVISION DESCRIPTION	SHEET NO.
-	-	-	-
-	-	-	-
-	-	-	-
-	-	-	-
-	-	-	-
-	-	-	-

THE INFORMATION, INCLUDING ESTIMATED QUANTITIES OF WORK, SHOWN ON THESE SHEETS IS BASED ON LIMITED INVESTIGATIONS BY THE STATE AND IS IN NO WAY WARRANTED TO INDICATE THE CONDITIONS OF ACTUAL QUANTITIES OF WORK WHICH WILL BE REQUIRED.

Plotted: 7/28/2010

DESIGNER/DRAFTER: P. GILKEY
CHECKED BY: T. WALB
SCALE AS NOTED

STATE OF CONNECTICUT
DEPARTMENT OF TRANSPORTATION

Filename: P:\General\Outgoing\ConnDOT\2010_0727-DEP Permit\HW_MSH_088_H035_TYP-05.dgn

SIGNATURE/BLOCK: URS CORPORATION AES
APPROVED BY: -
DATE: -

PROJECT TITLE: NEW BRITAIN - HARTFORD BUSWAY

TOWN: NEW BRITAIN
DRAWING TITLE: LOCAL ROADS TYPICAL SECTIONS

PROJECT NO. 88-H035
DRAWING NO. TYP-05
SHEET NO. S

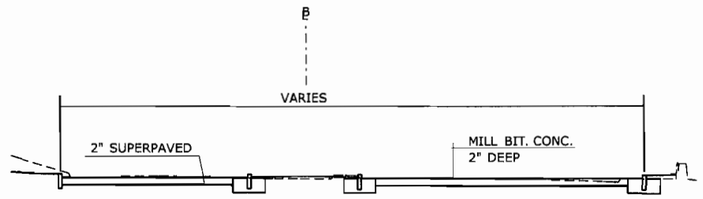

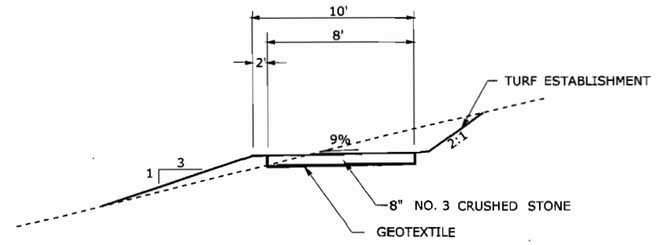

WATER QUALITY BASIN ACCESS DRIVE
W/ GRAVEL SURFACE

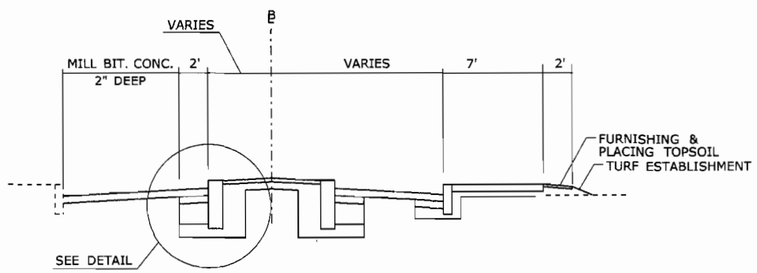

ROUTE 71 (TRUMAN OVERPASS)

NOTE: MILL & OVERLAY - MATCH EXISTING CROSS SLOPE

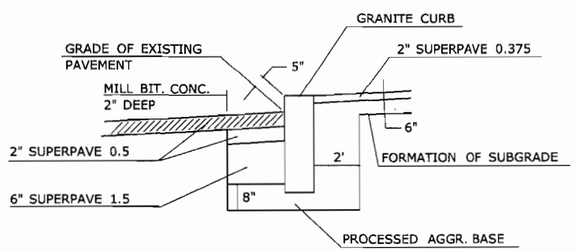

DETAIL

FINAL DESIGN REVIEW

REV.	DATE	REVISION DESCRIPTION	SHEET NO.
-	-	-	-
-	-	-	-
-	-	-	-
-	-	-	-
-	-	-	-
-	-	-	-

THE INFORMATION, INCLUDING ESTIMATED QUANTITIES OF WORK, SHOWN ON THESE SHEETS IS BASED ON LIMITED INVESTIGATIONS BY THE STATE AND IS IN NO WAY WARRANTED TO INDICATE THE CONDITIONS OF ACTUAL QUANTITIES OF WORK WHICH WILL BE REQUIRED.

Plotted: 7/28/2010

DESIGNER/DRAFTER: P. GILKEY
CHECKED BY: T. WALB
SCALE AS NOTED

STATE OF CONNECTICUT
DEPARTMENT OF TRANSPORTATION

Filename: P:\General\Outgoing\ConnDOT\2010_0727-DEP Permit\HW_MSH_088_H035_TYP-06.dgn

SIGNATURE/ BLOCK: URS CORPORATION AES
APPROVED BY: -
DATE: -

PROJECT TITLE: NEW BRITAIN - HARTFORD BUSWAY

TOWN: NEW BRITAIN

DRAWING TITLE: TYPICAL SECTIONS

PROJECT NO. 88-H035
DRAWING NO. TYP-06
SHEET NO. S

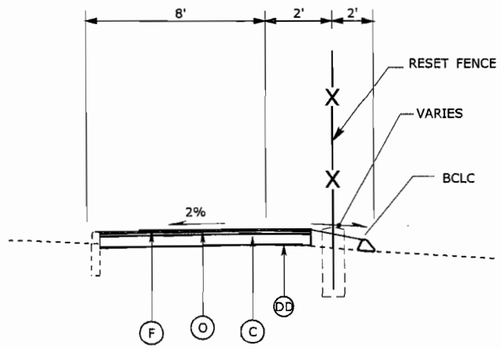

607+75 TO 608+50

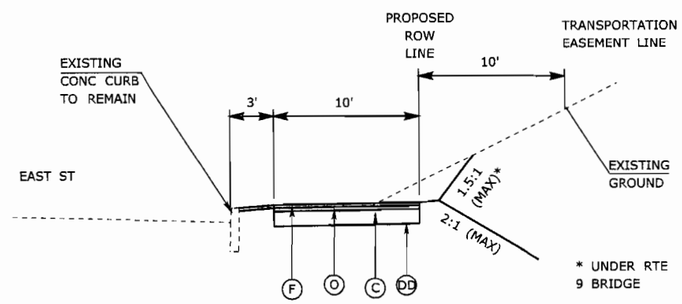

593+80 TO 601+00
603+40 TO 606+80
610+80 TO 620+40

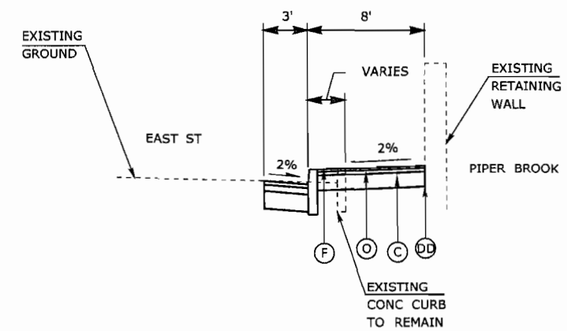

MUT ALONG EAST STREET

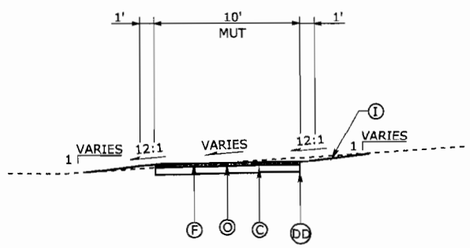

MUT

588+00 TO 593+00

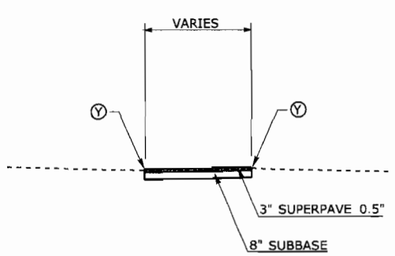

CEMETERY ACCESS ROAD

LEGEND:

- (A) 4" SUPERPAVE 0.5" (PLACED IN TWO EQUAL LIFTS)
- (B) 6" SUPERPAVE 1.0"
- (C) 6" PROCESSED AGGREGATE BASE
- (D) 10" SUBBASE
- (E) POINT OF BANK APPLICATION
- (F) 1.25" SUPERPAVE 0.25"
- (G) VERTICAL FACE P.C.B.C. (21" X 45")
- (H) SPLIT RAIL FENCE (SEE PLANS FOR LOCATIONS)
- (I) TURF ESTABLISHMENT
- (J) 10" CONCRETE PAVEMENT
- (K) NOISE BARRIER WALL (SEE PLANS FOR LOCATIONS)
- (L) MBR (TYPE R-B 350 10 GA.) SEE PLANS FOR LOCATIONS
- (M) POINT OF GRADE APPLICATION
- (N) SPECIAL CURBING
- (O) 1.5" SUPERPAVE 0.375"
- (P) BITUMINOUS CONCRETE PARK CURBING
- (Q) RETAINING WALL
- (R) 4" SUPERPAVE 1.0"
- (S) VISUAL SCREEN (TOP TO BE 11'-6" ABOVE BUSWAY BASELINE ELEVATION)
- (T) 4" EDGEDRAIN
- (U) ORNAMENTAL METAL FENCE (5' HIGH)
- (V) 4" CONCRETE
- (W) GRANULAR FILL
- (X) CONCRETE CURBING
- (Y) FURNISHING & PLACING TOPSOIL
- (Z) CONCRETE SIDEWALK
- (DD) FORMATION OF SUBGRADE

NOTES:

1. TYPICAL SHOULDER WIDTH IS 4'. SHOULDER WIDTHS OF LESS THAN 4' ARE USED IN RESTRICTIVE LOCATIONS - SEE PLANS FOR LOCATIONS.
2. HIGH-SIDE OF BANK SHOULDER CROSS SLOPE VARIES (4% MAXIMUM) - 7% MAXIMUM DIFFERENCE BETWEEN TRAVEL LANE AND SHOULDER.
3. LOW-SIDE OF BANK SHOULDER CROSS SLOPE VARIES (4% MINIMUM).

FINAL DESIGN REVIEW

REV.	DATE	REVISION DESCRIPTION	SHEET NO.
-	-	-	-
-	-	-	-
-	-	-	-
-	-	-	-
-	-	-	-
-	-	-	-

THE INFORMATION, INCLUDING ESTIMATED QUANTITIES OF WORK, SHOWN ON THESE SHEETS IS BASED ON LIMITED INVESTIGATIONS BY THE STATE AND IS IN NO WAY WARRANTED TO INDICATE THE CONDITIONS OF ACTUAL QUANTITIES OF WORK WHICH WILL BE REQUIRED.

Plotted: 7/28/2010

DESIGNER/DRAFTER: P. GILKEY
CHECKED BY: T. WALB
SCALE AS NOTED

STATE OF CONNECTICUT
DEPARTMENT OF TRANSPORTATION

Filename: P:\General\Outgoing\ConnDOT\2010..0727-DEP Permit\HW..MSH..088..H035..TYP-07.dgn

SIGNATURE/BLOCK: URS CORPORATION AES
APPROVED BY: -
DATE: -

PROJECT TITLE: NEW BRITAIN - HARTFORD BUSWAY

TOWN: NEW BRITAIN
DRAWING TITLE: TYPICAL SECTIONS

PROJECT NO. 88-H035
DRAWING NO. TYP-07
SHEET NO. S

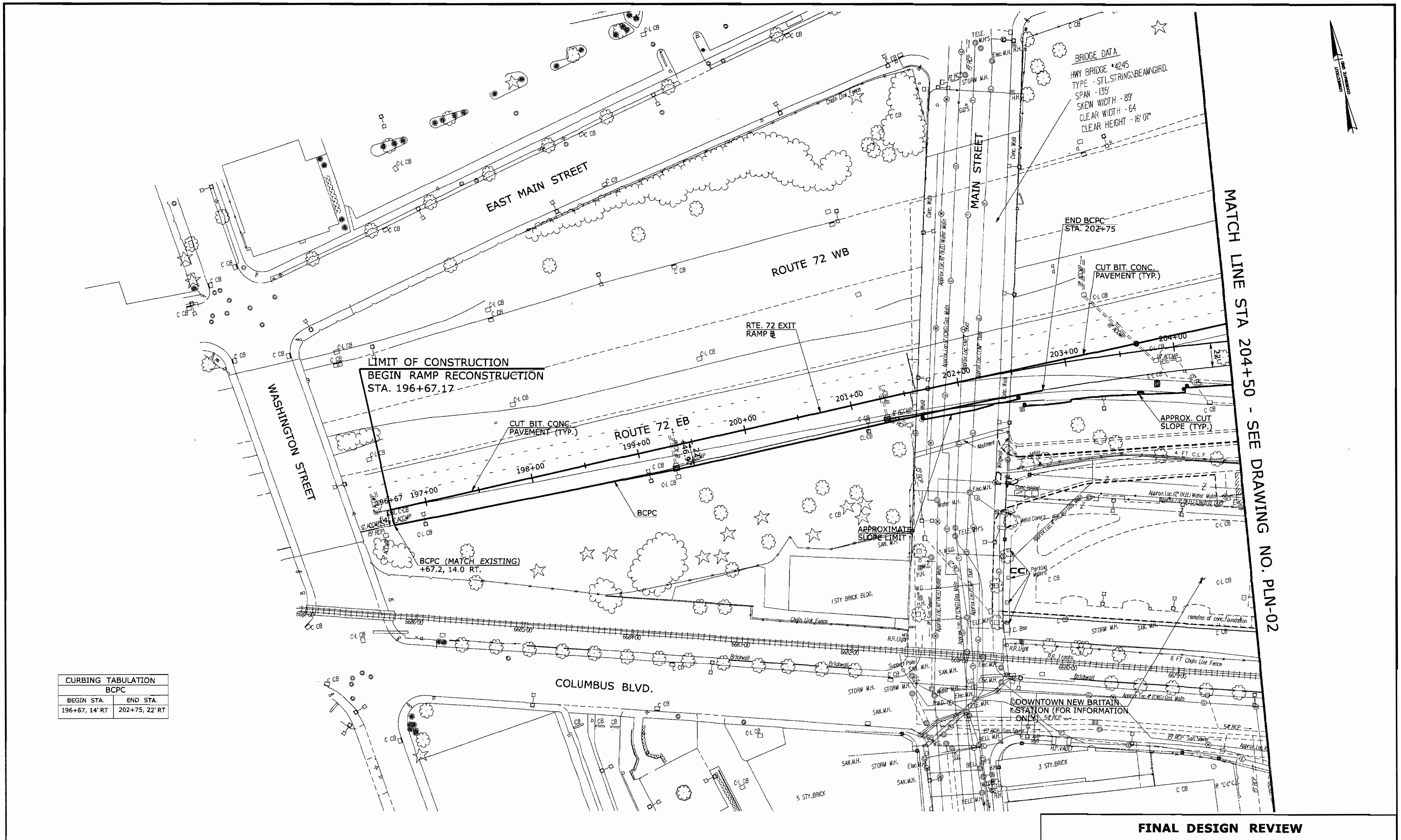

CURBING TABULATION	
BCPC	
BEGIN STA.	END STA.
196+67, 14' RT	202+75, 22' RT

FINAL DESIGN REVIEW

REV.	DATE	REVISION DESCRIPTION	SHEET NO.
-	-	-	-
-	-	-	-
-	-	-	-
-	-	-	-
-	-	-	-
-	-	-	-

THE INFORMATION, INCLUDING ESTIMATED QUANTITIES OF WORK, SHOWN ON THESE SHEETS IS BASED ON LIMITED INVESTIGATIONS BY THE STATE AND IS IN NO WAY WARRANTED TO INDICATE THE CONDITIONS OF ACTUAL QUANTITIES OF WORK WHICH WILL BE REQUIRED.

Plotted: 7/28/2010

DESIGNER/DRAFTER: P. GILKEY

CHECKED BY: T. WALB

SCALE IN FEET 0 40 80

SCALE 1"=40'

STATE OF CONNECTICUT DEPARTMENT OF TRANSPORTATION

Filename: P:\General\Outgoing\ConnDOT\2010_0727-DEP Permit\HW_MSH_088_H035_PLN-01.dgn

SIGNATURE/BLOCK: **URS CORPORATION AES**

APPROVED BY: -　DATE: -

PROJECT TITLE: **NEW BRITAIN - HARTFORD BUSWAY**

TOWN: **NEW BRITAIN**

DRAWING TITLE: **BUSWAY PLAN**

PROJECT NO. **88-H035**

DRAWING NO. **PLN-01**

SHEET NO. **S**

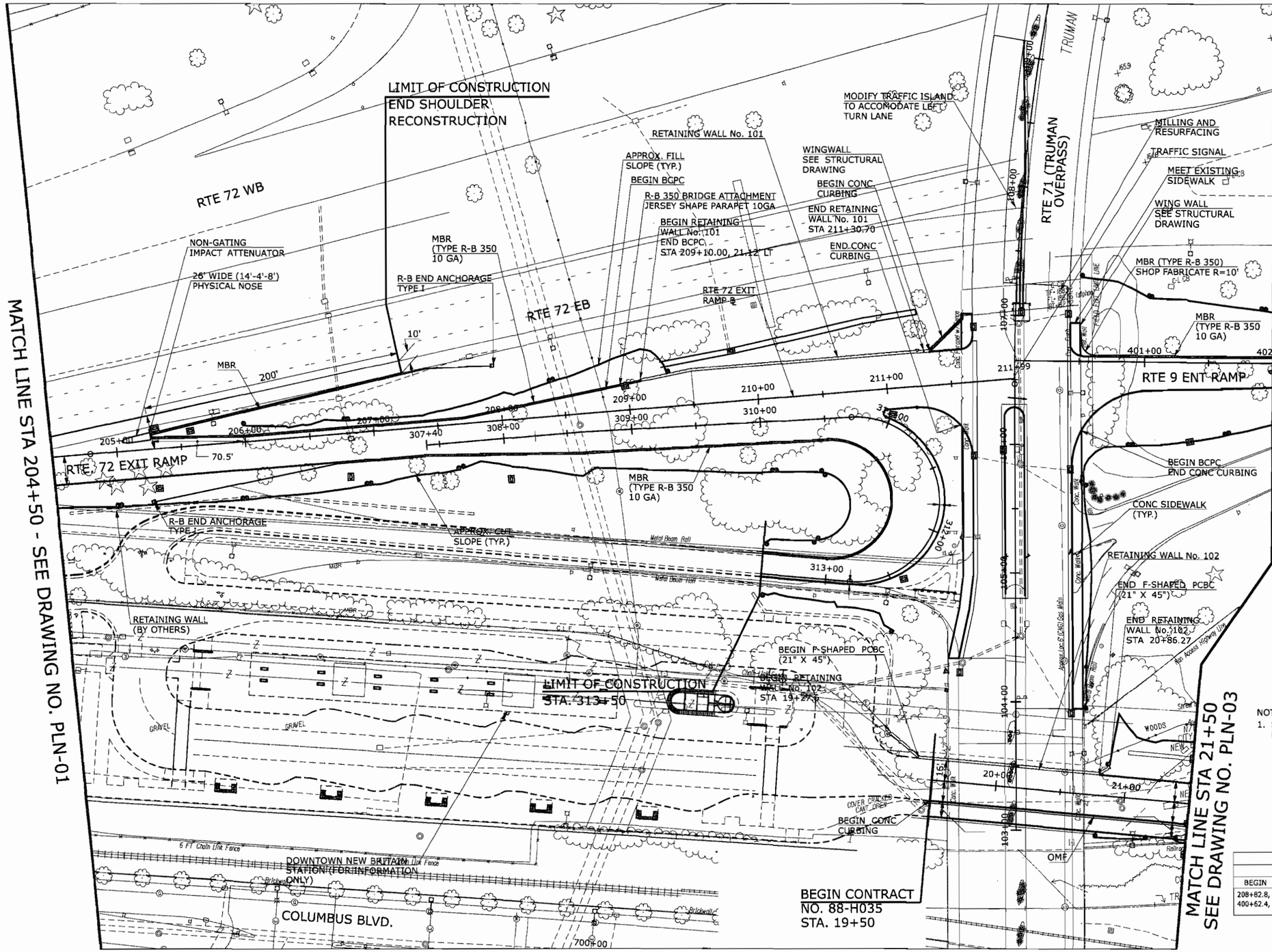

NOTES:

1. SEE SHEET PLN-14 FOR INFORMATION ON ROUTE 71 (TRUMAN OVERPASS).

CURBING TABULATION			
BCPC		CONC CURBING	
BEGIN STA.	END STA.	BEGIN STA.	END STA.
208+82.8, 17.8' LT 400+62.4, 40.0' RT	209+10.0, 21.1' LT 402+00.0, 18.6' RT	19+50.0, 16.0' RT	21+50.0, 16.0' RT

FINAL DESIGN REVIEW

REV.	DATE	REVISION DESCRIPTION	SHEET NO.
-	-	-	-
-	-	-	-
-	-	-	-
-	-	-	-
-	-	-	-
-	-	-	-

THE INFORMATION, INCLUDING ESTIMATED QUANTITIES OF WORK, SHOWN ON THESE SHEETS IS BASED ON LIMITED INVESTIGATIONS BY THE STATE AND IS IN NO WAY WARRANTED TO INDICATE THE CONDITIONS OF ACTUAL QUANTITIES OF WORK WHICH WILL BE REQUIRED.

Plotted: 7/28/2010

DESIGNER/DRAFTER: P. GILKEY
CHECKED BY: T. WALB
SCALE IN FEET 0 40 80
SCALE 1"=40'

STATE OF CONNECTICUT
DEPARTMENT OF TRANSPORTATION

Filename: P:\General\Outgoing\ConnDOT\2010_0727-DEP Permit\HW_MSH_088_H035_PLN-02.dgn

SIGNATURE/BLOCK: URS CORPORATION AES
APPROVED BY: -
DATE: -

PROJECT TITLE: NEW BRITAIN - HARTFORD BUSWAY

TOWN: NEW BRITAIN

DRAWING TITLE: BUSWAY PLAN

PROJECT NO. 88-H035
DRAWING NO. PLN-02
SHEET NO. S

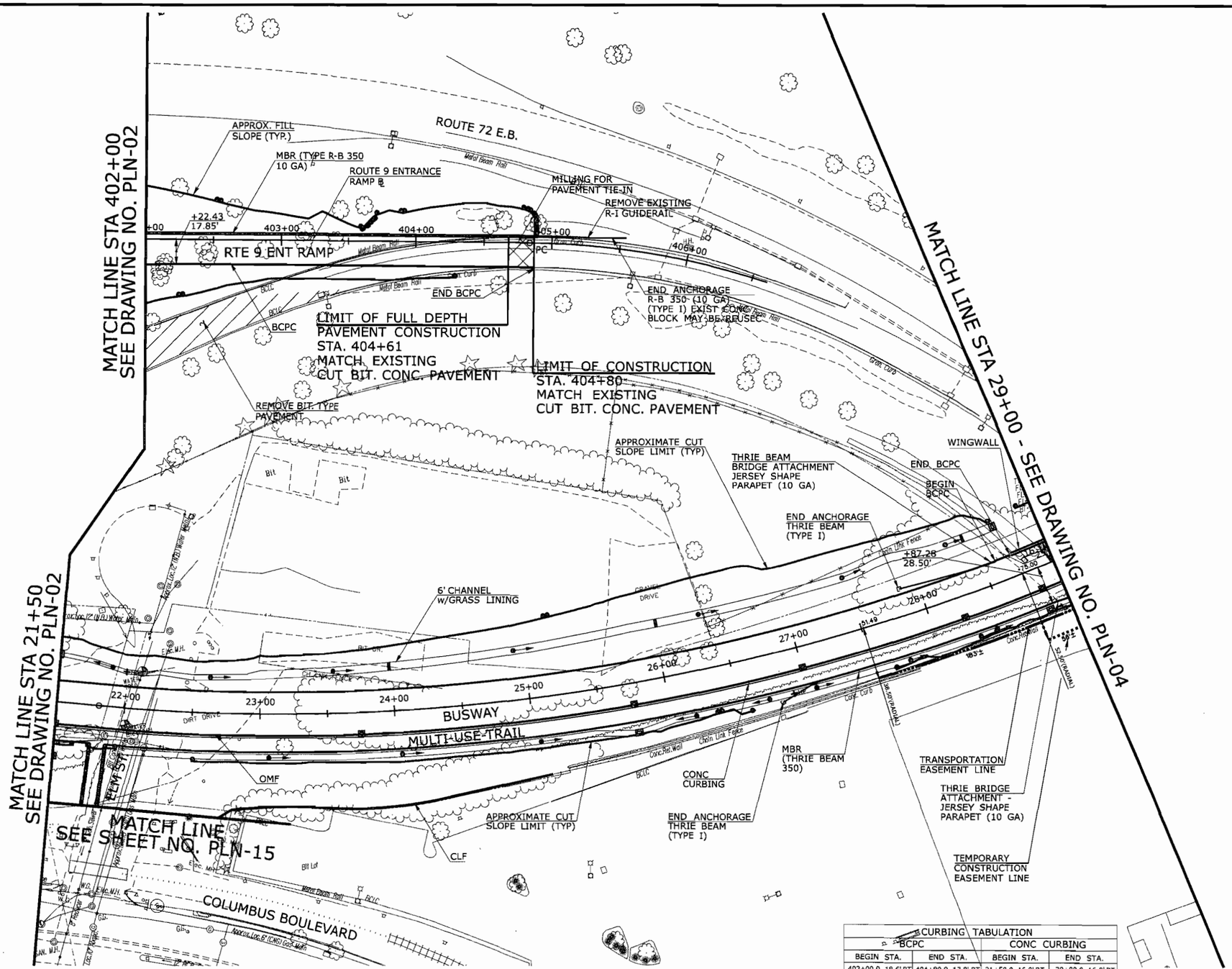

CURBING TABULATION			
BCPC		CONC CURBING	
BEGIN STA.	END STA.	BEGIN STA.	END STA.
402+00.0, 18.6' RT 28+59.3, 16.0' LT	404+80.0, 17.8' RT 28+71.3, 16.0' LT	21+50.0, 16.0' RT	29+00.0, 16.0' RT

FINAL DESIGN REVIEW

REV.	DATE	REVISION DESCRIPTION	SHEET NO.
-	-	-	-
-	-	-	-
-	-	-	-
-	-	-	-
-	-	-	-
-	-	-	-

THE INFORMATION, INCLUDING ESTIMATED QUANTITIES OF WORK, SHOWN ON THESE SHEETS IS BASED ON LIMITED INVESTIGATIONS BY THE STATE AND IS IN NO WAY WARRANTED TO INDICATE THE CONDITIONS OF ACTUAL QUANTITIES OF WORK WHICH WILL BE REQUIRED.

Plotted: 7/28/2010

DESIGNER/DRAFTER: P. GILKEY
CHECKED BY: T. WALB
SCALE IN FEET 0 40 80
SCALE 1"=40'

STATE OF CONNECTICUT
DEPARTMENT OF TRANSPORTATION

Filename: P:\General\Outgoing\ConnDOT\2010_0727-DEP Permit\HW_MSH_088_H035_PLN-03.dgn

SIGNATURE/BLOCK: URS CORPORATION AES
APPROVED BY: -
DATE: -

PROJECT TITLE: NEW BRITAIN - HARTFORD BUSWAY

TOWN: NEW BRITAIN
DRAWING TITLE: BUSWAY PLAN

PROJECT NO. 88-H035
DRAWING NO. PLN-03
SHEET NO. S

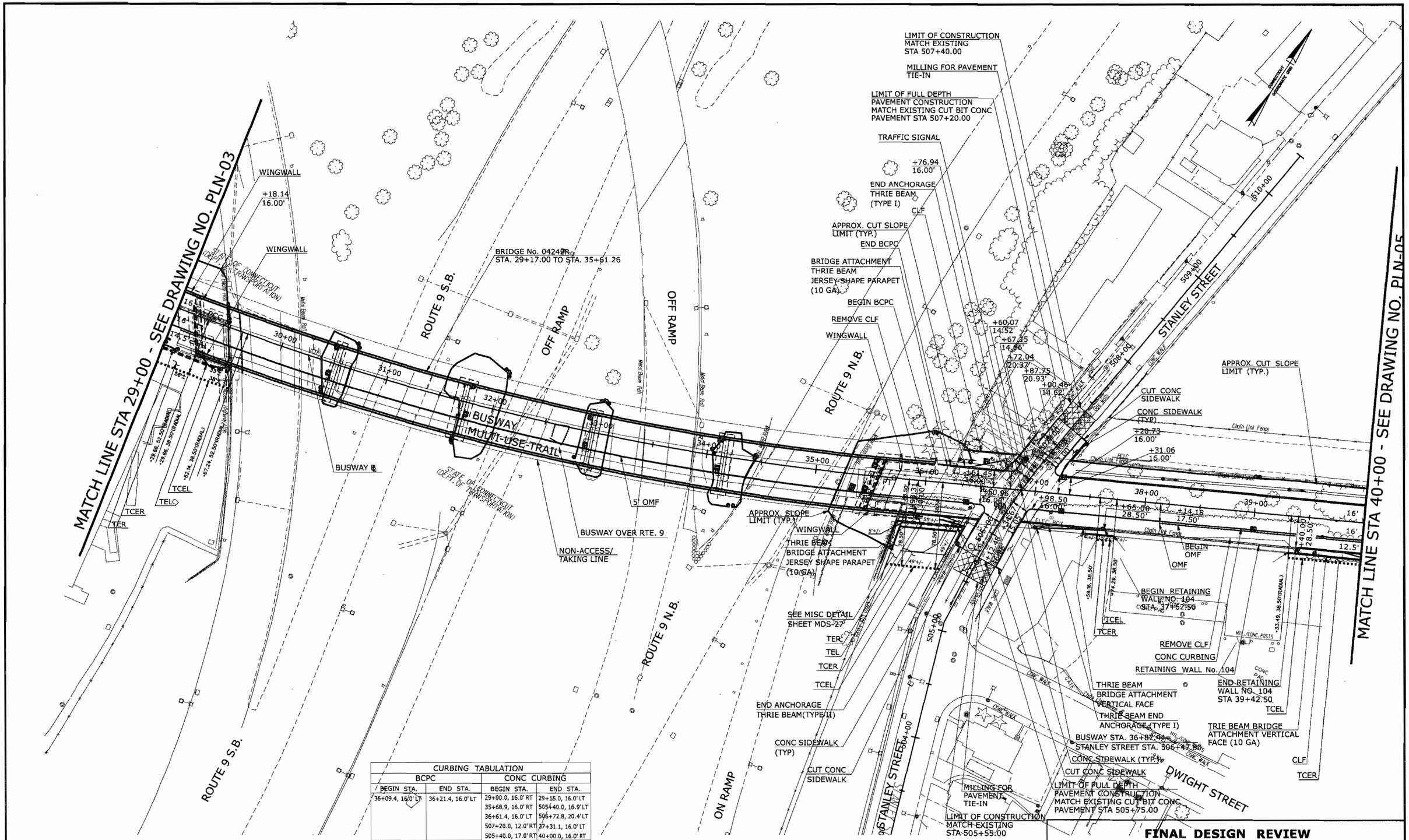

CURBING TABULATION			
BCPC		CONC CURBING	
BEGIN STA.	END STA.	BEGIN STA.	END STA.
36+09.4, 16.0' LT	36+21.4, 16.0' LT	29+00.0, 16.0' RT	29+15.0, 16.0' LT
		35+68.9, 16.0' RT	505+40.0, 16.9' LT
		36+61.4, 16.0' LT	506+72.8, 20.4' LT
		507+20.0, 12.0' RT	37+31.1, 16.0' LT
		505+40.0, 17.0' RT	40+00.0, 16.0' RT

REV.	DATE	REVISION DESCRIPTION	SHEET NO.
-	-	-	-
-	-	-	-
-	-	-	-
-	-	-	-
-	-	-	-
-	-	-	-
-	-	-	-

THE INFORMATION, INCLUDING ESTIMATED QUANTITIES OF WORK, SHOWN ON THESE SHEETS IS BASED ON LIMITED INVESTIGATIONS BY THE STATE AND IS IN NO WAY WARRANTED TO INDICATE THE CONDITIONS OF ACTUAL QUANTITIES OF WORK WHICH WILL BE REQUIRED.

Plotted: 7/28/2010

DESIGNER/DRAFTER: P. GILKEY
CHECKED BY: T. WALB
SCALE IN FEET 0 40 80
SCALE 1"=40'

STATE OF CONNECTICUT
DEPARTMENT OF TRANSPORTATION

Filename: P:\General\Outgoing\ConnDOT\2010_0727-DEP Permit\HW_MSH_088_H035_PLN-04.dgn

SIGNATURE/ BLOCK: URS CORPORATION AES
APPROVED BY: -
DATE: -

PROJECT TITLE: NEW BRITAIN - HARTFORD BUSWAY

TOWN: NEW BRITAIN
DRAWING TITLE: BUSWAY PLAN

PROJECT NO. 88-H035
DRAWING NO. PLN-04
SHEET NO. S

MATCH LINE STA 40+00 - SEE DRAWING NO. PLN-04

MATCH LINE STA 51+00 - SEE DRAWING NO. PLN-06

STATE OF CONNECTICUT MILITARY DEPARTMENT (STATE ARMORY)

BUSWAY

MULTI-USE-TRAIL

APPROX. CUT SLOPE LIMIT (TYP.)

BUSWAY

Subject To A 40' Easement For Access To Stanley Street In Favor Of Sealectra Corporation

Right To Use A 10' Strip Of Land Of State Of Connecticut For Access To Stanley Street

N/F 585 EAST MAIN STREET, LLC

CLF

TCER

TCEL

END ANCHORAGE (TYPE I)

N/F THE BUDA-SEIBERT DAIRY COMPANY

N/F HOUSEHOLD COAL & OIL CO. OF NEW BRITAIN

REMOVE & RESET CLF

SLOPE LIMIT

OME

Right To Use A 17' Strip Of Land Of Woodland One, LLC For Access To Fairview Street

N/F WOODLAND ONE, LLC

Subject To A 17' Easement For Access To Fairview Street In Favor Of Household Coal And Oil Company Of New Britain

CONC. CURBING

RIGHT-OF-WAY REVIEW

N/F GHT ASSOCIATES, LLC

BEGIN RETAINING WALL No. 115 STA 48+75

TAKING LINE

REMAINING WALL No. 115 WITH TAILING ATOP

NOTE: MSE WALL HEIGHT = 2' TO 3'

OXFORD STREET

YALE STREET

FAIRVIEW STREET

DWIGHT COURT

CURBING TABULATION	
CONC CURBING	
BEGIN STA.	END STA.
40+00.0, 16.0' RT	51+00.0, 16.0' RT

FINAL DESIGN REVIEW

REV.	DATE	REVISION DESCRIPTION	SHEET NO.
-	-	-	-
-	-	-	-
-	-	-	-
-	-	-	-
-	-	-	-
-	-	-	-

THE INFORMATION, INCLUDING ESTIMATED QUANTITIES OF WORK, SHOWN ON THESE SHEETS IS BASED ON LIMITED INVESTIGATIONS BY THE STATE AND IS IN NO WAY WARRANTED TO INDICATE THE CONDITIONS OF ACTUAL QUANTITIES OF WORK WHICH WILL BE REQUIRED.

Plotted: 7/28/2010

DESIGNER/DRAFTER: P. GILKEY

CHECKED BY: T. WALB

SCALE IN FEET 0 40 80

SCALE 1"=40'

STATE OF CONNECTICUT DEPARTMENT OF TRANSPORTATION

Filename: P:\General\Outgoing\ConnDOT\2010_0727-DEP Permit\HW_MSH_088_H035_PLN-05.dgn

SIGNATURE/ BLOCK: URS CORPORATION AES

APPROVED BY: -

DATE: -

PROJECT TITLE: NEW BRITAIN - HARTFORD BUSWAY

TOWN: NEW BRITAIN

DRAWING TITLE: BUSWAY PLAN

PROJECT NO. 88-H035

DRAWING NO. PLN-05

SHEET NO. S

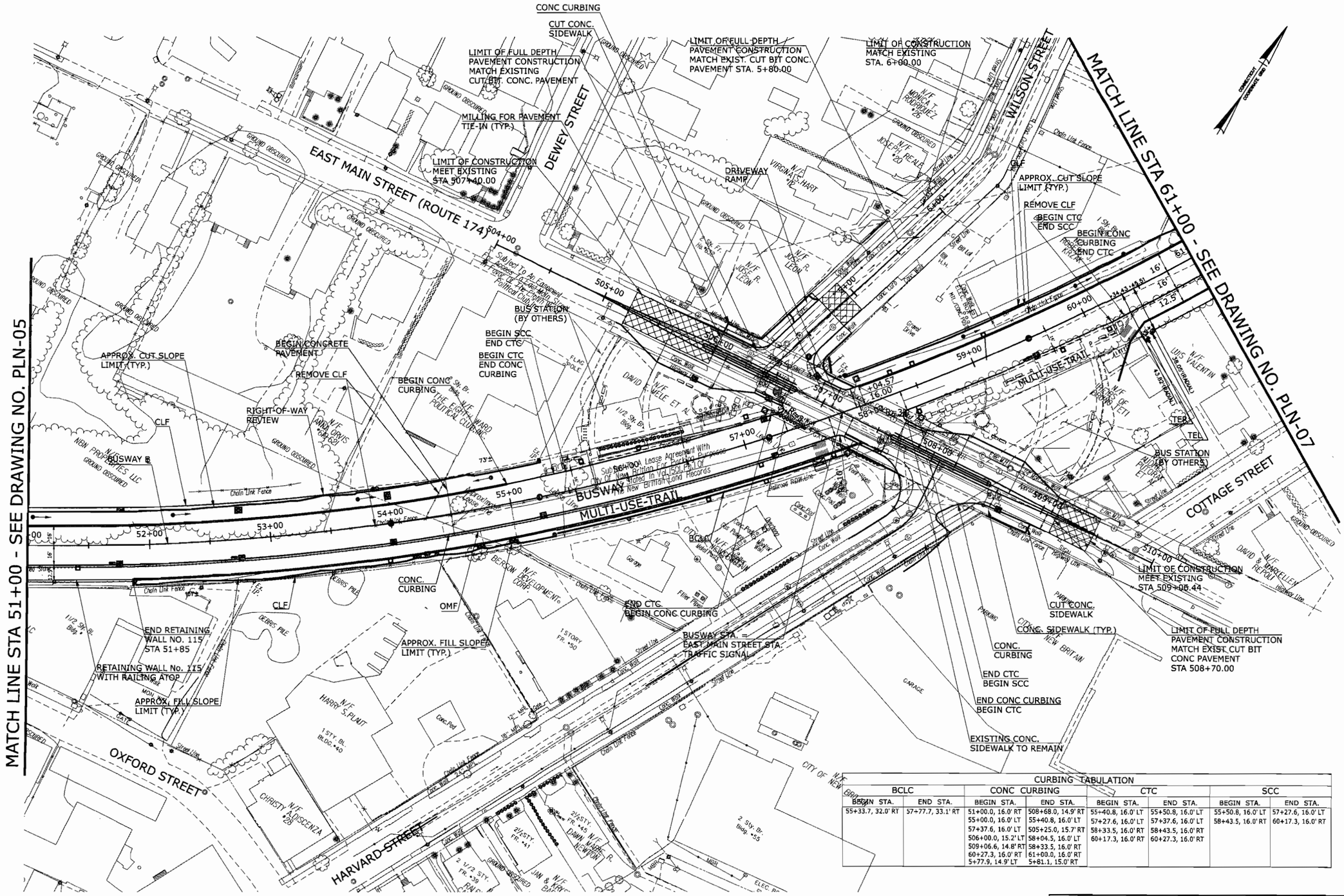

CURBING TABULATION							
BCLC		CONC CURBING		CTC		SCC	
BEGIN STA.	END STA.	BEGIN STA.	END STA.	BEGIN STA.	END STA.	BEGIN STA.	END STA.
55+33.7, 32.0' RT	57+77.7, 33.1' RT	51+00.0, 16.0' RT	508+68.0, 14.9' RT	55+40.8, 16.0' LT	55+50.8, 16.0' LT	55+50.8, 16.0' LT	57+27.6, 16.0' LT
		55+00.0, 16.0' LT	55+40.8, 16.0' LT	57+27.6, 16.0' LT	57+37.6, 16.0' LT	58+43.5, 16.0' RT	60+17.3, 16.0' RT
		57+37.6, 16.0' LT	505+25.0, 15.7' RT	58+33.5, 16.0' RT	58+43.5, 16.0' RT		
		506+00.0, 15.2' LT	58+04.5, 16.0' LT	60+17.3, 16.0' RT	60+27.3, 16.0' RT		
		509+06.6, 14.8' RT	58+33.5, 16.0' RT				
		60+27.3, 16.0' RT	61+00.0, 16.0' RT				
		5+77.9, 14.9' LT	5+81.1, 15.0' RT				

FINAL DESIGN REVIEW

REV.	DATE	REVISION DESCRIPTION	SHEET NO.
-	-	-	-
-	-	-	-
-	-	-	-
-	-	-	-
-	-	-	-
-	-	-	-
-	-	-	-

THE INFORMATION, INCLUDING ESTIMATED QUANTITIES OF WORK, SHOWN ON THESE SHEETS IS BASED ON LIMITED INVESTIGATIONS BY THE STATE AND IS IN NO WAY WARRANTED TO INDICATE THE CONDITIONS OF ACTUAL QUANTITIES OF WORK WHICH WILL BE REQUIRED.

Plotted: 7/28/2010

DESIGNER/DRAFTER: P. GILKEY
CHECKED BY: T. WALB
SCALE IN FEET 0 40 80
SCALE 1"=40'

STATE OF CONNECTICUT
DEPARTMENT OF TRANSPORTATION

Filename: P:\General\Outgoing\ConnDOT\2010_0727-DEP Permit\H\W_MSH_088_H035_PLN-06.dgn

SIGNATURE/BLOCK: URS CORPORATION AES
APPROVED BY: - DATE: -

PROJECT TITLE: NEW BRITAIN - HARTFORD BUSWAY

TOWN: NEW BRITAIN

DRAWING TITLE: BUSWAY PLAN

PROJECT NO. 88-H035
DRAWING NO. PLN-06
SHEET NO. S

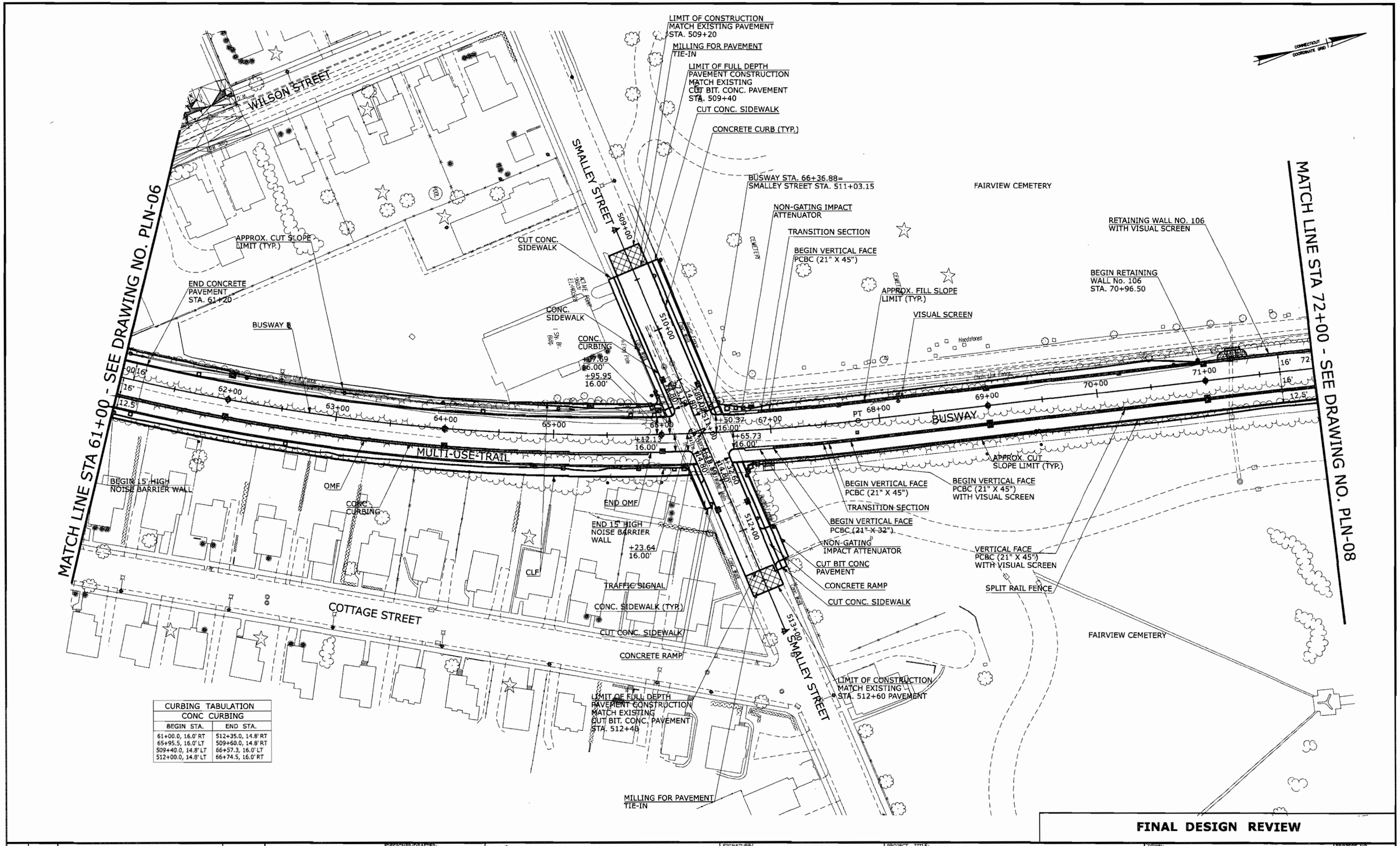

CURBING TABULATION	
CONC CURBING	
BEGIN STA.	END STA.
61+00.0, 16.0' RT	512+35.0, 14.8' RT
65+95.5, 16.0' LT	509+60.0, 14.8' RT
509+40.0, 14.8' LT	66+57.3, 16.0' LT
512+00.0, 14.8' LT	66+74.5, 16.0' RT

FINAL DESIGN REVIEW

REV.	DATE	REVISION DESCRIPTION	SHEET NO.
-	-	-	-
-	-	-	-
-	-	-	-
-	-	-	-
-	-	-	-
-	-	-	-

THE INFORMATION, INCLUDING ESTIMATED QUANTITIES OF WORK, SHOWN ON THESE SHEETS IS BASED ON LIMITED INVESTIGATIONS BY THE STATE AND IS IN NO WAY WARRANTED TO INDICATE THE CONDITIONS OF ACTUAL QUANTITIES OF WORK WHICH WILL BE REQUIRED.

Plotted: 7/28/2010

DESIGNER/DRAFTER: P. GILKEY
CHECKED BY: T. WALB
SCALE IN FEET 0 40 80
SCALE 1"=40'

STATE OF CONNECTICUT
DEPARTMENT OF TRANSPORTATION

Filename: P:\General\Outgoing\ConnDOT\2010_0727-DEP Permit\HW_MSH_088_H035_PLN-07.dgn

SIGNATURE/BLOCK: URS CORPORATION AES
APPROVED BY: -
DATE: -

PROJECT TITLE: NEW BRITAIN - HARTFORD BUSWAY

TOWN: NEW BRITAIN

DRAWING TITLE: BUSWAY PLAN

PROJECT NO. 88-H035
DRAWING NO. PLN-07
SHEET NO. S

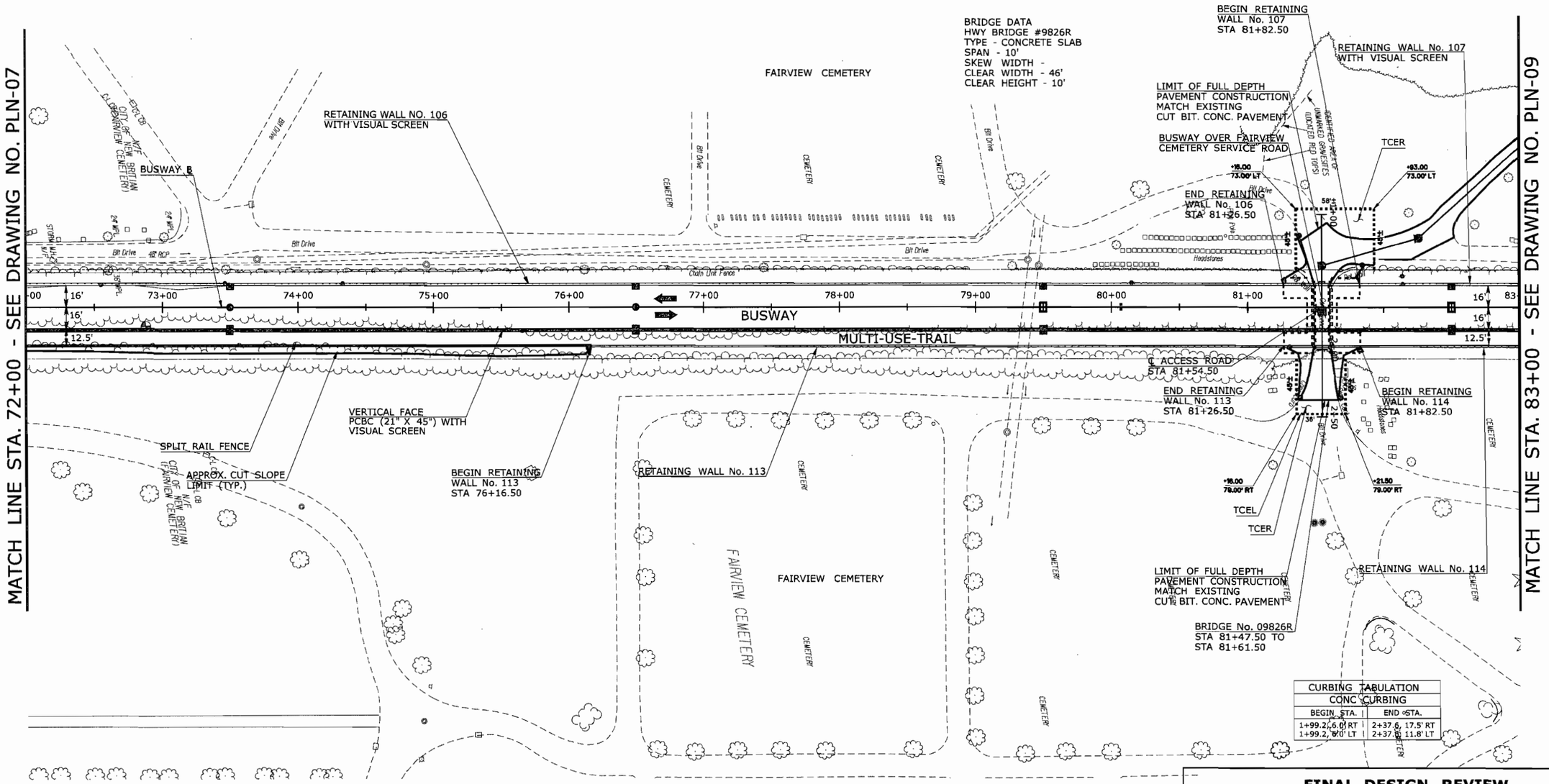

FINAL DESIGN REVIEW

REV.	DATE	REVISION DESCRIPTION	SHEET NO.
-	-	-	-
-	-	-	-
-	-	-	-
-	-	-	-
-	-	-	-
-	-	-	-

THE INFORMATION, INCLUDING ESTIMATED QUANTITIES OF WORK, SHOWN ON THESE SHEETS IS BASED ON LIMITED INVESTIGATIONS BY THE STATE AND IS IN NO WAY WARRANTED TO INDICATE THE CONDITIONS OF ACTUAL QUANTITIES OF WORK WHICH WILL BE REQUIRED.

Plotted: 7/28/2010

DESIGNER/DRAFTER: P. GILKEY
CHECKED BY: T. WALB
SCALE IN FEET 0 40 80
SCALE 1"=40'

STATE OF CONNECTICUT
DEPARTMENT OF TRANSPORTATION

Filename: P:\General\Outgoing\ConnDOT\2010.0727-DEP Permit\HW.MSH.088.H035.PLN-08.dgn

SIGNATURE/BLOCK: URS CORPORATION AES
APPROVED BY: -
DATE: -

PROJECT TITLE: NEW BRITAIN - HARTFORD BUSWAY

TOWN: NEW BRITAIN

DRAWING TITLE: BUSWAY PLAN

PROJECT NO. 88-H035
DRAWING NO. PLN-08
SHEET NO. S

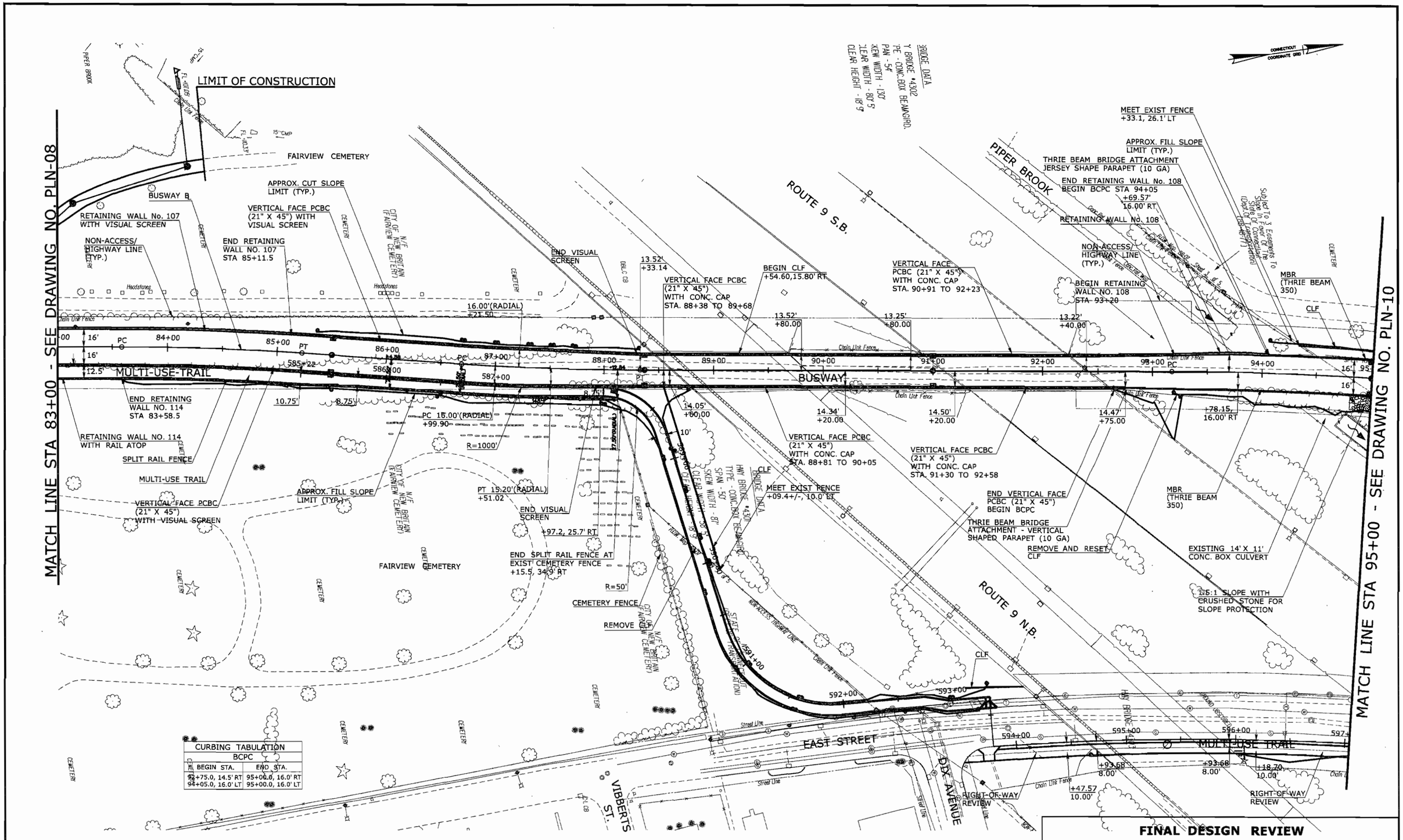

FINAL DESIGN REVIEW

REV.	DATE	REVISION DESCRIPTION	SHEET NO.
-	-	-	-
-	-	-	-
-	-	-	-
-	-	-	-
-	-	-	-
-	-	-	-

THE INFORMATION, INCLUDING ESTIMATED QUANTITIES OF WORK, SHOWN ON THESE SHEETS IS BASED ON LIMITED INVESTIGATIONS BY THE STATE AND IS IN NO WAY WARRANTED TO INDICATE THE CONDITIONS OF ACTUAL QUANTITIES OF WORK WHICH WILL BE REQUIRED.

Plotted: 7/28/2010

DESIGNER/DRAFTER: P. GILKEY
CHECKED BY: T. WALB
SCALE IN FEET 0 40 80
SCALE 1"=40'

STATE OF CONNECTICUT
DEPARTMENT OF TRANSPORTATION

Filename: P:\General\Outgoing\ConnDOT\2010.0727-DEP Permit\HW_MSH_088_H035_PLN-09.dgn

SIGNATURE/ BLOCK: URS CORPORATION AES
APPROVED BY: -
DATE: -

PROJECT TITLE: NEW BRITAIN - HARTFORD BUSWAY

TOWN: NEW BRITAIN

DRAWING TITLE: BUSWAY PLAN

PROJECT NO. 88-H035
DRAWING NO. PLN-09
SHEET NO. S

CURBING TABULATION			
BCPC		GSC	
BEGIN STA.	END STA.	BEGIN STA.	END STA.
95+00.0, 16.0' RT 95+00.0, 16.0' LT	98+25.0. 16.0' RT 100+00.0, 16.0' LT	600+96.3, 0.0' LT/RT	603+95.3, 0.0' LT/RT

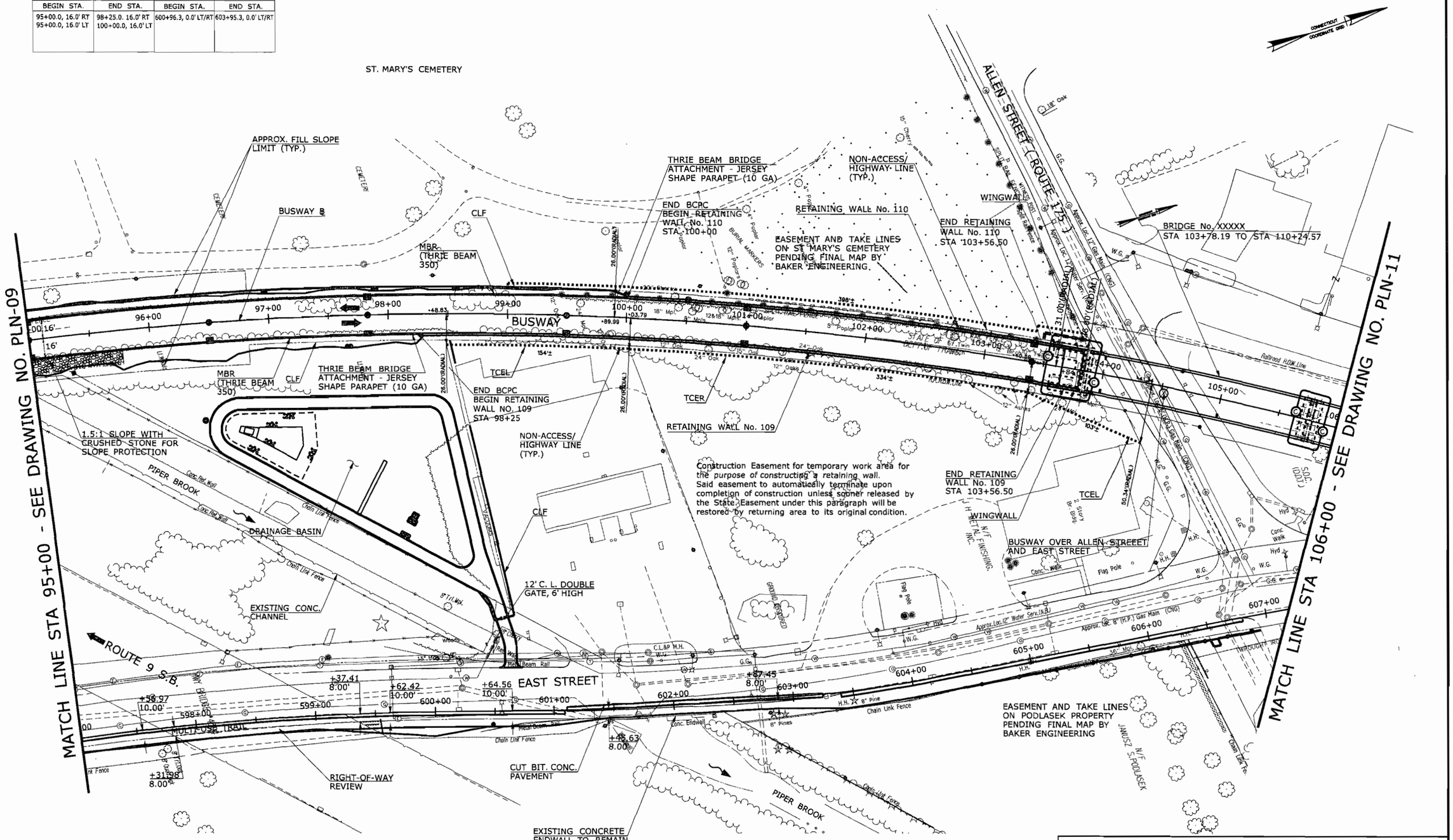

FINAL DESIGN REVIEW

REV.	DATE	REVISION DESCRIPTION	SHEET NO.
-	-	-	-
-	-	-	-
-	-	-	-
-	-	-	-
-	-	-	-
-	-	-	-

THE INFORMATION, INCLUDING ESTIMATED QUANTITIES OF WORK, SHOWN ON THESE SHEETS IS BASED ON LIMITED INVESTIGATIONS BY THE STATE AND IS IN NO WAY WARRANTED TO INDICATE THE CONDITIONS OF ACTUAL QUANTITIES OF WORK WHICH WILL BE REQUIRED.

Plotted: 7/28/2010

DESIGNER/DRAFTER: P. GILKEY
CHECKED BY: T. WALB
SCALE IN FEET 0 40 80
SCALE 1"=40'

STATE OF CONNECTICUT
DEPARTMENT OF TRANSPORTATION

Filename: P:\General\Outgoing\ConnDOT\2010_0727-DEP Permit\HW_MSH_088_H035_PLN-10.dgn

SIGNATURE/ BLOCK: URS CORPORATION AES
APPROVED BY: -
DATE: -

PROJECT TITLE: NEW BRITAIN - HARTFORD BUSWAY

TOWN: NEW BRITAIN
DRAWING TITLE: BUSWAY PLAN

PROJECT NO. 88-H035
DRAWING NO. PLN-10
SHEET NO. S

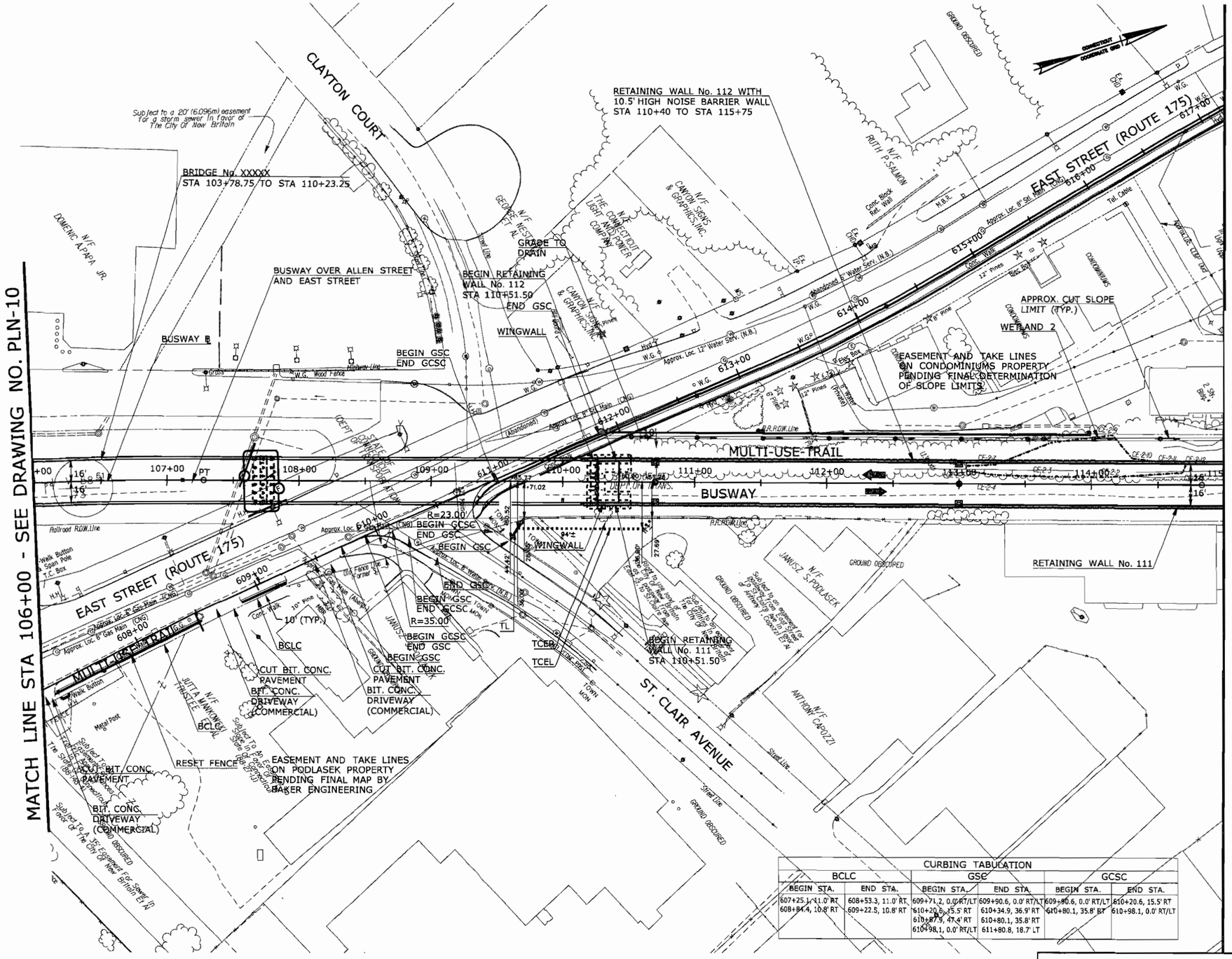

CURBING TABULATION					
BCLC		GSC		GCSC	
BEGIN STA.	END STA.	BEGIN STA.	END STA.	BEGIN STA.	END STA.
607+25.1, 11.0' RT 608+84.4, 10.8' RT	608+53.3, 11.0' RT 609+22.5, 10.8' RT	609+71.2, 0.0' RT/LT 610+20.6, 15.5' RT 610+87.9, 47.4' RT 610+98.1, 0.0' RT/LT	609+90.6, 0.0' RT/LT 610+34.9, 36.9' RT 610+80.1, 35.8' RT 611+80.8, 18.7' LT	609+90.6, 0.0' RT/LT 610+80.1, 35.8' RT	610+20.6, 15.5' RT 610+98.1, 0.0' RT/LT

FINAL DESIGN REVIEW

REV.	DATE	REVISION DESCRIPTION	SHEET NO.
-	-	-	-
-	-	-	-
-	-	-	-
-	-	-	-
-	-	-	-
-	-	-	-
-	-	-	-

THE INFORMATION, INCLUDING ESTIMATED QUANTITIES OF WORK, SHOWN ON THESE SHEETS IS BASED ON LIMITED INVESTIGATIONS BY THE STATE AND IS IN NO WAY WARRANTED TO INDICATE THE CONDITIONS OF ACTUAL QUANTITIES OF WORK WHICH WILL BE REQUIRED.

Plotted: 7/28/2010

DESIGNER/DRAFTER: P. GILKEY
CHECKED BY: T. WALB
SCALE IN FEET 0 40 80
SCALE 1"=40'

STATE OF CONNECTICUT
DEPARTMENT OF TRANSPORTATION

Filename: P:\General\Outgoing\ConnDOT\2010.0727-DEP Permit\HW.MSH.088.H035.PLN-11.dgn

SIGNATURE/BLOCK: URS CORPORATION AES
APPROVED BY: -
DATE: -

PROJECT TITLE: NEW BRITAIN - HARTFORD BUSWAY

TOWN: NEW BRITAIN

DRAWING TITLE: BUSWAY PLAN

PROJECT NO. 88-H035
DRAWING NO. PLN-11
SHEET NO. S

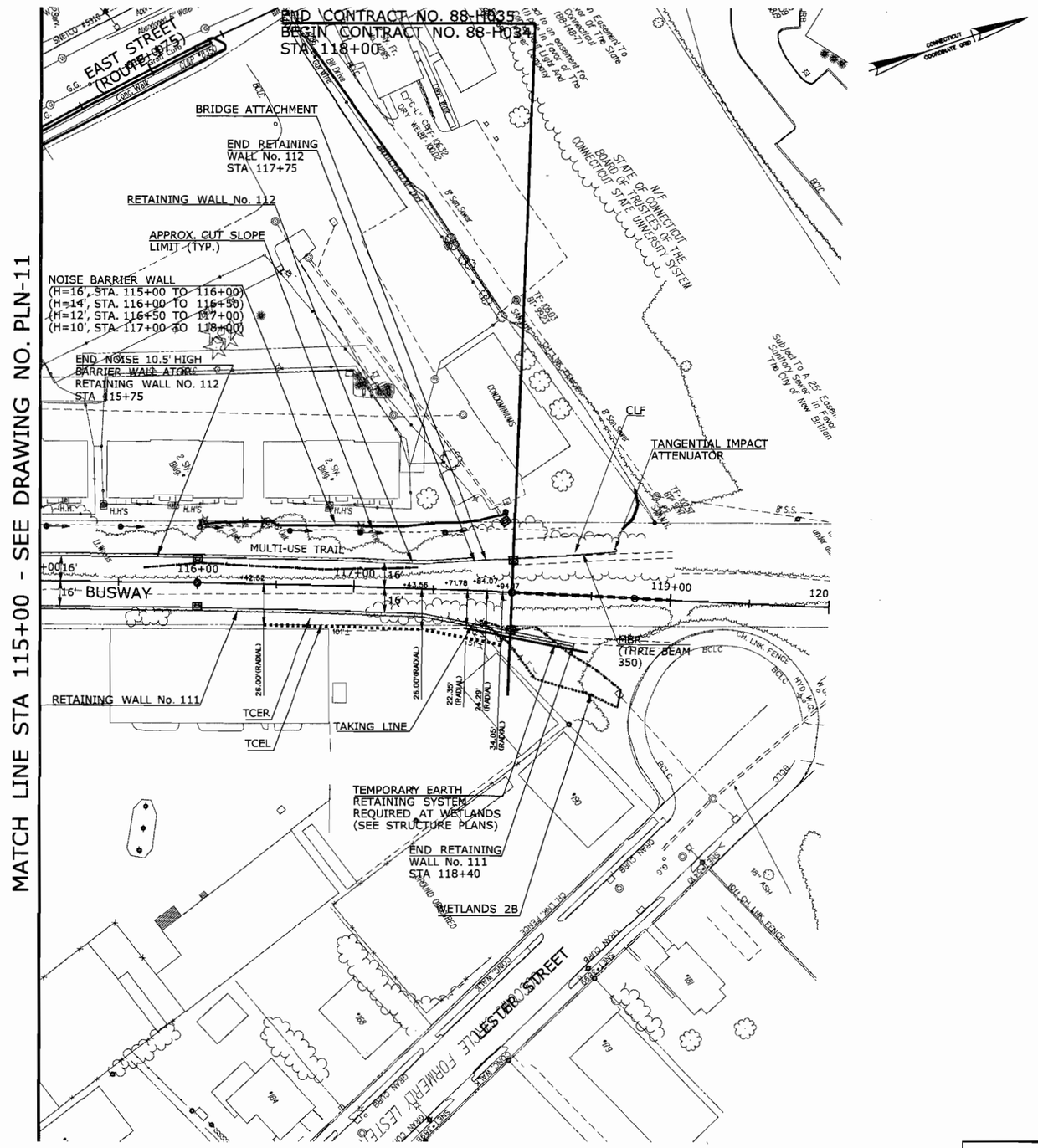

FINAL DESIGN REVIEW

REV.	DATE	REVISION DESCRIPTION	SHEET NO.
-	-	-	-
-	-	-	-
-	-	-	-
-	-	-	-
-	-	-	-
-	-	-	-

THE INFORMATION, INCLUDING ESTIMATED QUANTITIES OF WORK, SHOWN ON THESE SHEETS IS BASED ON LIMITED INVESTIGATIONS BY THE STATE AND IS IN NO WAY WARRANTED TO INDICATE THE CONDITIONS OF ACTUAL QUANTITIES OF WORK WHICH WILL BE REQUIRED.

Plotted: 7/28/2010

DESIGNER/DRAFTER: P. GILKEY
CHECKED BY: T. WALB
SCALE IN FEET 0 40 80
SCALE 1"=40'

STATE OF CONNECTICUT
DEPARTMENT OF TRANSPORTATION

Filename: P:\General\Outgoing\ConnDOT\2010_0727-DEP Permit\HW_MSH_088_H035_PLN-12.dgn

SIGNATURE/BLOCK: URS CORPORATION AES
APPROVED BY: -
DATE: -

PROJECT TITLE: NEW BRITAIN - HARTFORD BUSWAY

TOWN: NEW BRITAIN
DRAWING TITLE: BUSWAY PLAN

PROJECT NO. 88-H035
DRAWING NO. PLN-12
SHEET NO. S

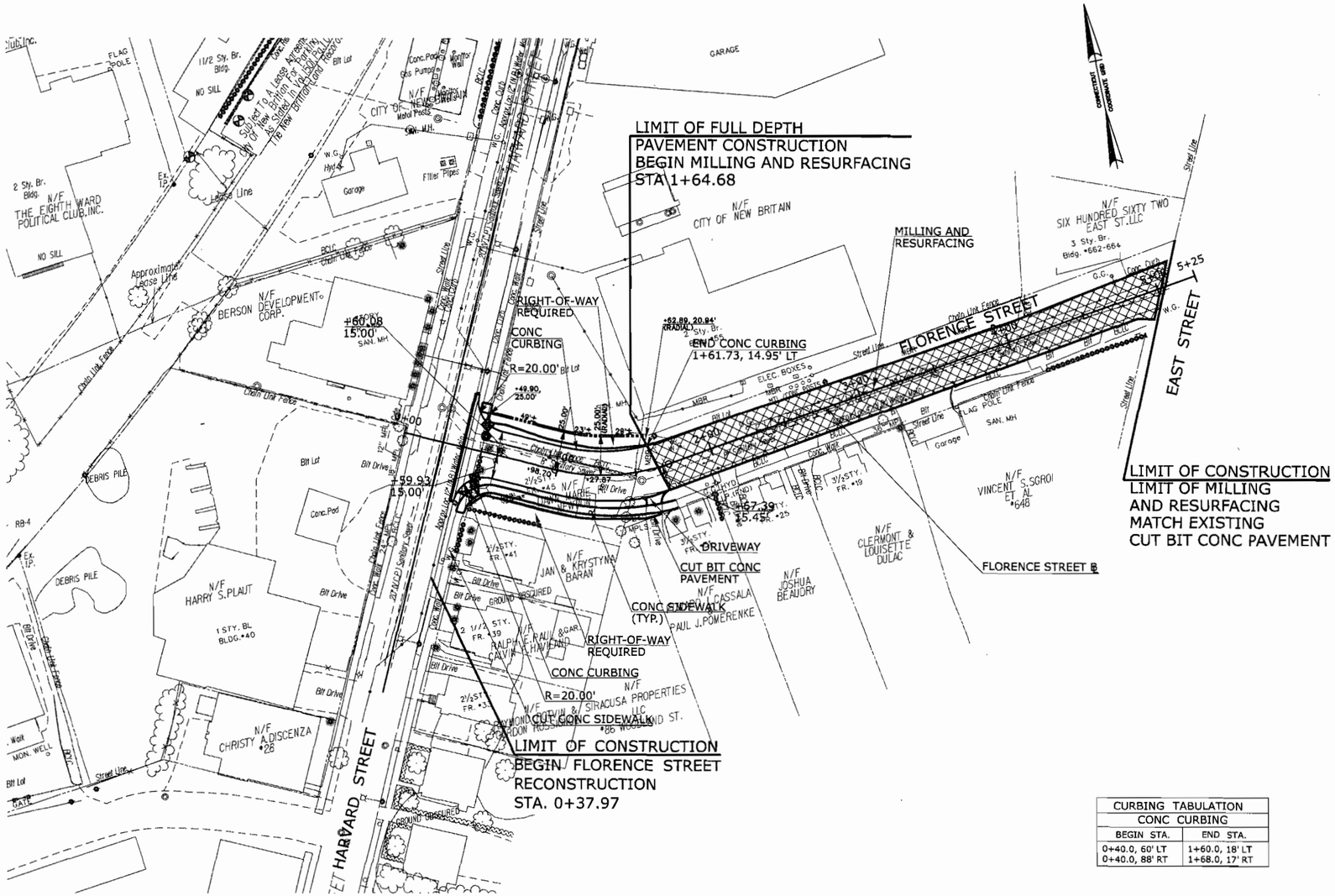

CURBING TABULATION	
CONC CURBING	
BEGIN STA.	END STA.
0+40.0, 60' LT 0+40.0, 88' RT	1+60.0, 18' LT 1+68.0, 17' RT

FINAL DESIGN REVIEW

REV.	DATE	REVISION DESCRIPTION	SHEET NO.
-	-	-	-
-	-	-	-
-	-	-	-
-	-	-	-
-	-	-	-
-	-	-	-

THE INFORMATION, INCLUDING ESTIMATED QUANTITIES OF WORK, SHOWN ON THESE SHEETS IS BASED ON LIMITED INVESTIGATIONS BY THE STATE AND IS IN NO WAY WARRANTED TO INDICATE THE CONDITIONS OF ACTUAL QUANTITIES OF WORK WHICH WILL BE REQUIRED.

Plotted: 7/28/2010

DESIGNER/DRAFTER: P. GILKEY
CHECKED BY: T. WALB
SCALE IN FEET 0 40 80
SCALE 1"=40'

STATE OF CONNECTICUT
DEPARTMENT OF TRANSPORTATION

Filename: P:\General\Outgoing\ConnDOT\2010_0727-DEP Permit\HW_MSH_088_H035_PLN-13.dgn

SIGNATURE/BLOCK: URS CORPORATION AES
APPROVED BY: -
DATE: -

PROJECT TITLE: NEW BRITAIN - HARTFORD BUSWAY

TOWN: NEW BRITAIN

DRAWING TITLE: FLORENCE STREET PLAN

PROJECT NO. 88-H035
DRAWING NO. PLN-13
SHEET NO. S

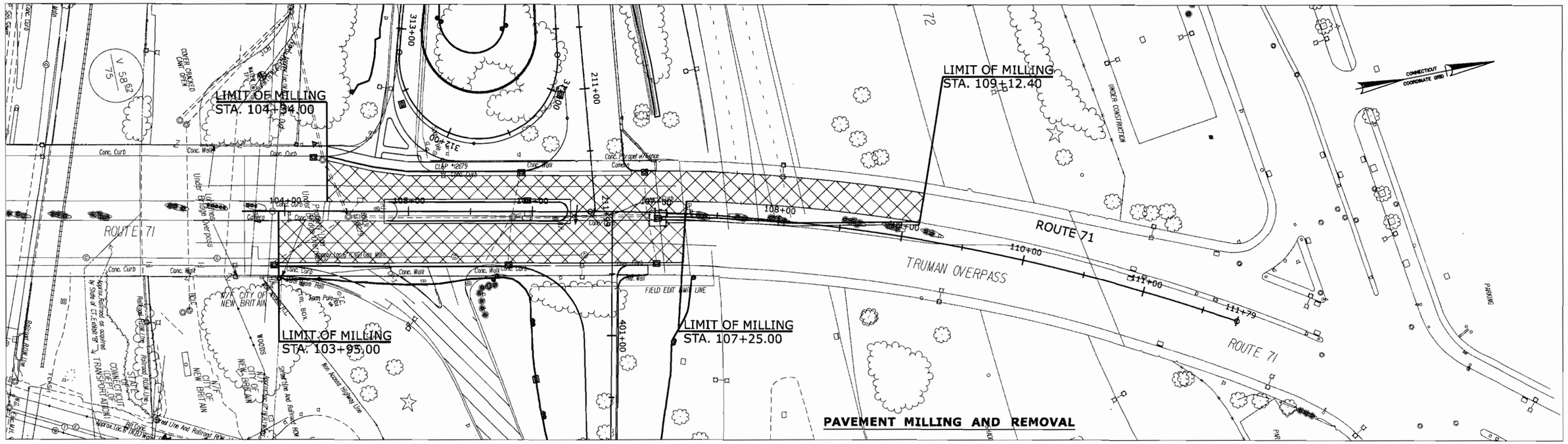

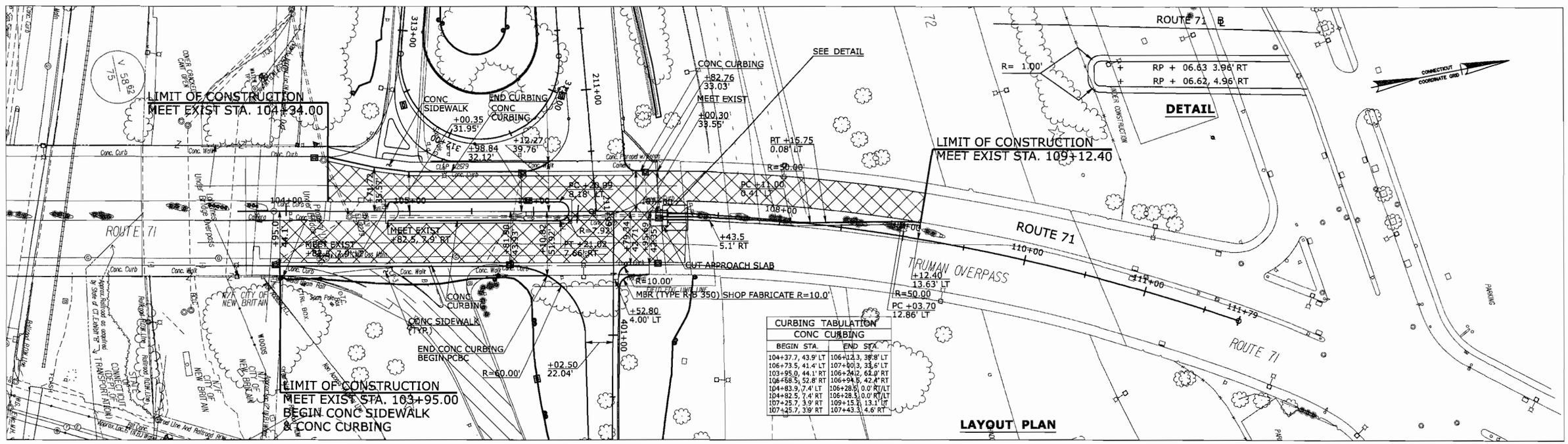

CURBING TABULATION	
CONC CURBING	
BEGIN STA.	END STA.
104+37.7, 43.9' LT	106+12.3, 38.8' LT
106+73.5, 41.4' LT	107+60.3, 33.6' LT
103+95.0, 44.1' RT	106+24.2, 62.0' RT
106+68.5, 52.8' RT	106+94.6, 42.4' RT
104+83.9, 7.4' LT	106+28.5, 0.0' RT/LT
104+92.5, 7.4' RT	106+28.5, 0.0' RT/LT
107+25.7, 3.9' RT	109+15.2, 13.1' LT
107+25.7, 3.9' RT	107+43.3, 4.6' RT

FINAL DESIGN REVIEW

REV.	DATE	REVISION DESCRIPTION	SHEET NO.
-	-	-	-
-	-	-	-
-	-	-	-
-	-	-	-
-	-	-	-
-	-	-	-

THE INFORMATION, INCLUDING ESTIMATED QUANTITIES OF WORK, SHOWN ON THESE SHEETS IS BASED ON LIMITED INVESTIGATIONS BY THE STATE AND IS IN NO WAY WARRANTED TO INDICATE THE CONDITIONS OF ACTUAL QUANTITIES OF WORK WHICH WILL BE REQUIRED.

Plotted: 7/28/2010

DESIGNER/DRAFTER: P. GILKEY
CHECKED BY: T. WALB
SCALE IN FEET 0 40 80
SCALE 1"=40'

STATE OF CONNECTICUT
DEPARTMENT OF TRANSPORTATION

Filename: P:\General\Outgoing\ConnDOT\2010_0727-DEP Permit\HW_MSH_088_H035_PLN-14.dgn

SIGNATURE/BLOCK: **URS CORPORATION AES**
APPROVED BY: -
DATE: -

PROJECT TITLE: **NEW BRITAIN - HARTFORD BUSWAY**

TOWN: **NEW BRITAIN**
DRAWING TITLE: **ROUTE 71 PLAN**

PROJECT NO. **88-H035**
DRAWING NO. **PLN-14**
SHEET NO. **S**

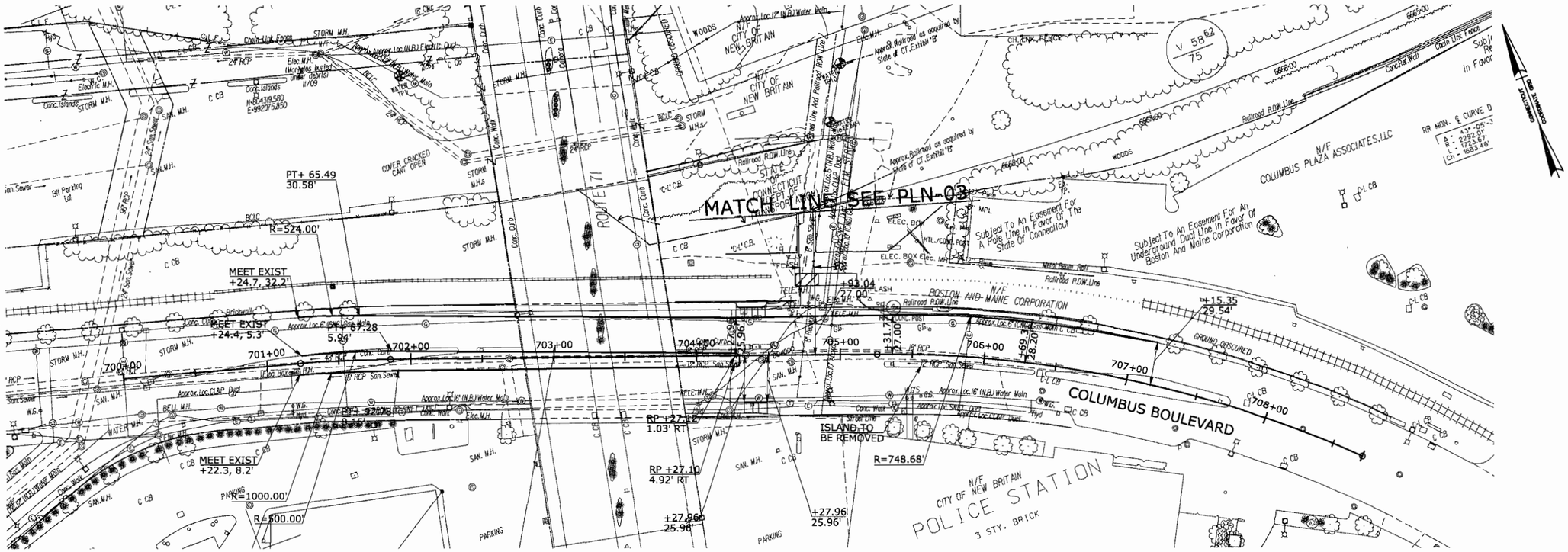

CURBING TABULATION	
CONC CURBING	
BEGIN STA.	END STA.
701+24.8, 31.7' LT	707+15.9, 29.5' LT
701+24.4, 4.8' LT	704+36.6 0.0' RT/LT
701+22.3, 7.6' RT	704+36.6, 0.0' RT/LT

FINAL DESIGN REVIEW

REV.	DATE	REVISION DESCRIPTION	SHEET NO.
-	-	-	-
-	-	-	-
-	-	-	-
-	-	-	-
-	-	-	-
-	-	-	-

THE INFORMATION, INCLUDING ESTIMATED QUANTITIES OF WORK, SHOWN ON THESE SHEETS IS BASED ON LIMITED INVESTIGATIONS BY THE STATE AND IS IN NO WAY WARRANTED TO INDICATE THE CONDITIONS OF ACTUAL QUANTITIES OF WORK WHICH WILL BE REQUIRED.

Plotted: 7/28/2010

DESIGNER/DRAFTER: P. GILKEY
CHECKED BY: T. WALB
SCALE IN FEET 0 40 80
SCALE 1"=40'

STATE OF CONNECTICUT
DEPARTMENT OF TRANSPORTATION

Filename: P:\General\Outgoing\ConnDOT\2010_0727-DEP Permit\HW_MSH_088_H035_PLN-15.dgn

SIGNATURE/ BLOCK: URS CORPORATION AES
APPROVED BY: -
DATE: -

PROJECT TITLE: NEW BRITAIN - HARTFORD BUSWAY

TOWN: NEW BRITAIN

DRAWING TITLE: COLUMBUS BOULEVARD PLAN

PROJECT NO. 88-H035
DRAWING NO. PLN-15
SHEET NO. S

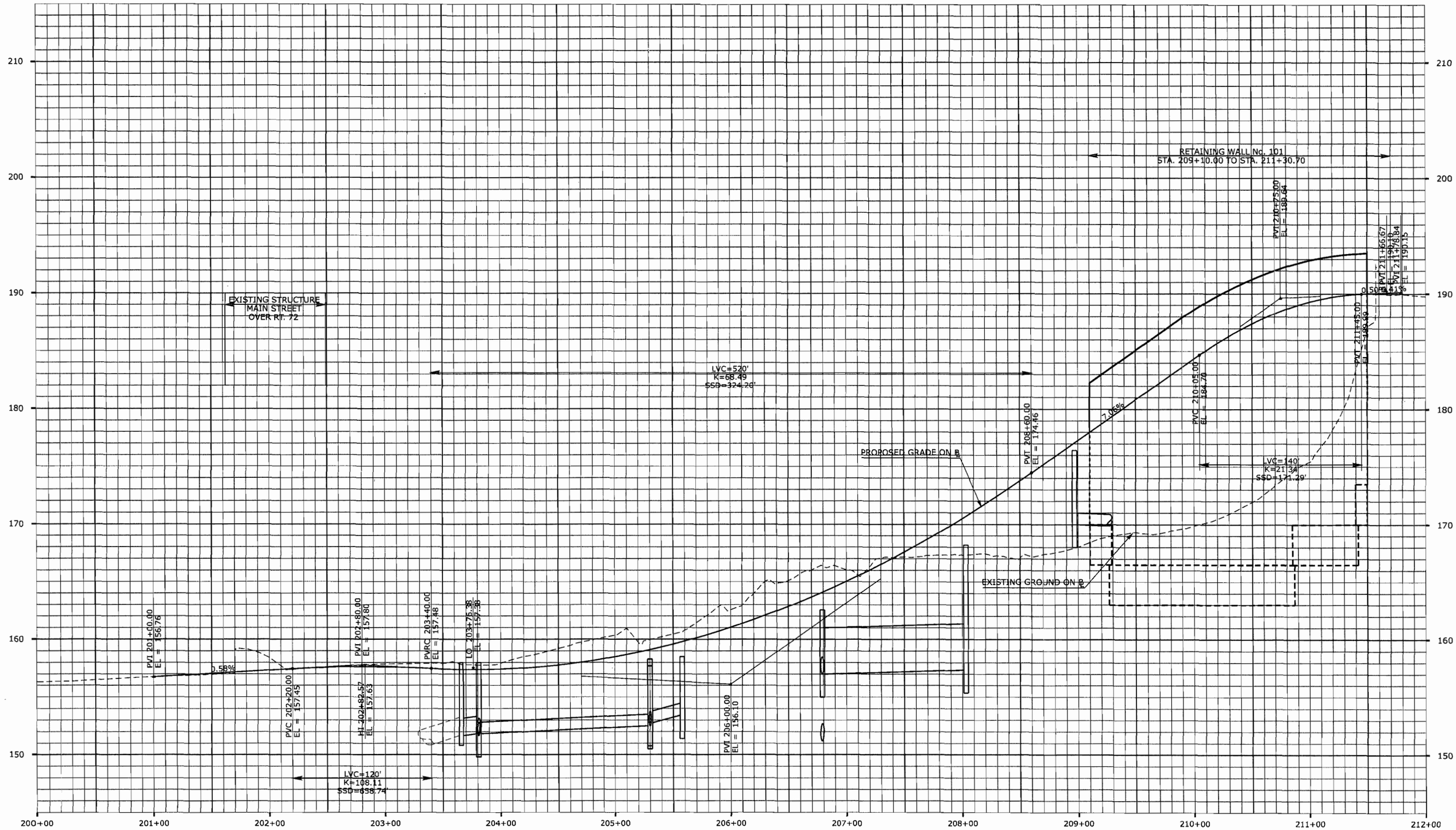

FINAL DESIGN REVIEW

REV.	DATE	REVISION DESCRIPTION	SHEET NO.
-	-	-	-
-	-	-	-
-	-	-	-
-	-	-	-
-	-	-	-
-	-	-	-

THE INFORMATION, INCLUDING ESTIMATED QUANTITIES OF WORK, SHOWN ON THESE SHEETS IS BASED ON LIMITED INVESTIGATIONS BY THE STATE AND IS IN NO WAY WARRANTED TO INDICATE THE CONDITIONS OF ACTUAL QUANTITIES OF WORK WHICH WILL BE REQUIRED.

Plotted: 7/28/2010

DESIGNER/DRAFTER: P. GILKEY
CHECKED BY: T. WALB
HORIZ. SCALE IN FEET 0 40 80
VERT. SCALE IN FEET 0 4 8

STATE OF CONNECTICUT
DEPARTMENT OF TRANSPORTATION

Filename: P:\General\Outgoing\ConnDOT\2010_0727-DEP Permit\HW_MSH_088_H035_PRO-01.dgn

SIGNATURE/BLOCK: URS CORPORATION AES
APPROVED BY: -
DATE: -

PROJECT TITLE: NEW BRITAIN - HARTFORD BUSWAY

TOWN: NEW BRITAIN

DRAWING TITLE: ROUTE 72 EXIT RAMP PROFILE

PROJECT NO. 88-H035
DRAWING NO. PRO-01
SHEET NO. S

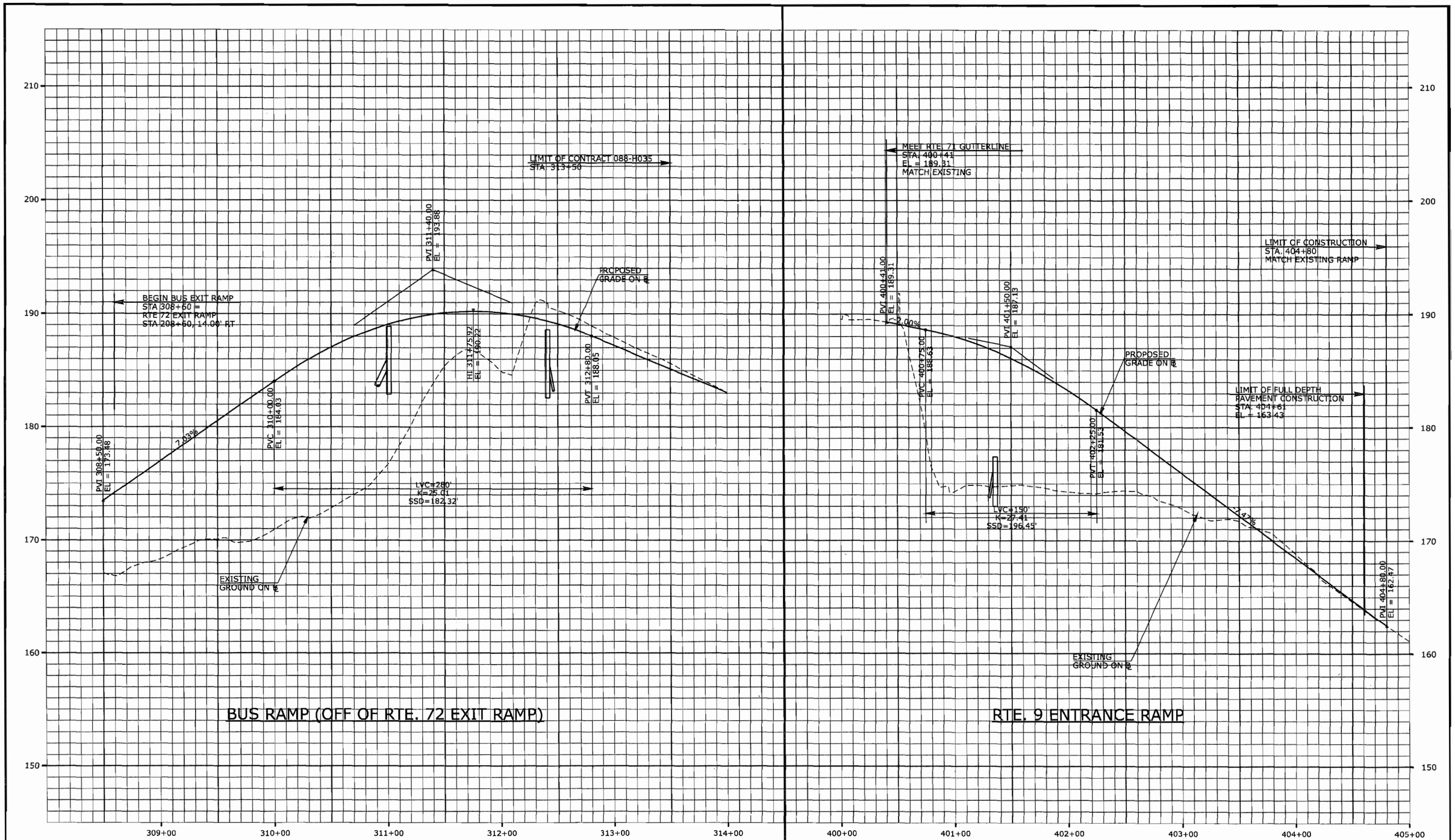

FINAL DESIGN REVIEW

REV.	DATE	REVISION DESCRIPTION	SHEET NO.
-	-	-	-
-	-	-	-
-	-	-	-
-	-	-	-
-	-	-	-
-	-	-	-

THE INFORMATION, INCLUDING ESTIMATED QUANTITIES OF WORK, SHOWN ON THESE SHEETS IS BASED ON LIMITED INVESTIGATIONS BY THE STATE AND IS IN NO WAY WARRANTED TO INDICATE THE CONDITIONS OF ACTUAL QUANTITIES OF WORK WHICH WILL BE REQUIRED.

Plotted: 7/28/2010

DESIGNER/DRAFTER: P. GILKEY
CHECKED BY: T. WALB
HORIZ. SCALE IN FEET 0 40 80
VERT. SCALE IN FEET 0 4 8

STATE OF CONNECTICUT
DEPARTMENT OF TRANSPORTATION

Filename: P:\General\Outgoing\ConnDOT\2010_0727-DEP Permit\HW_MSH_088_H035_PRO-02.dgn

SIGNATURE/BLOCK: URS CORPORATION AES
APPROVED BY: -
DATE: -

PROJECT TITLE: NEW BRITAIN - HARTFORD BUSWAY

TOWN: NEW BRITAIN
DRAWING TITLE: PROFILE

PROJECT NO. 88-H035
DRAWING NO. PRO-02
SHEET NO. S

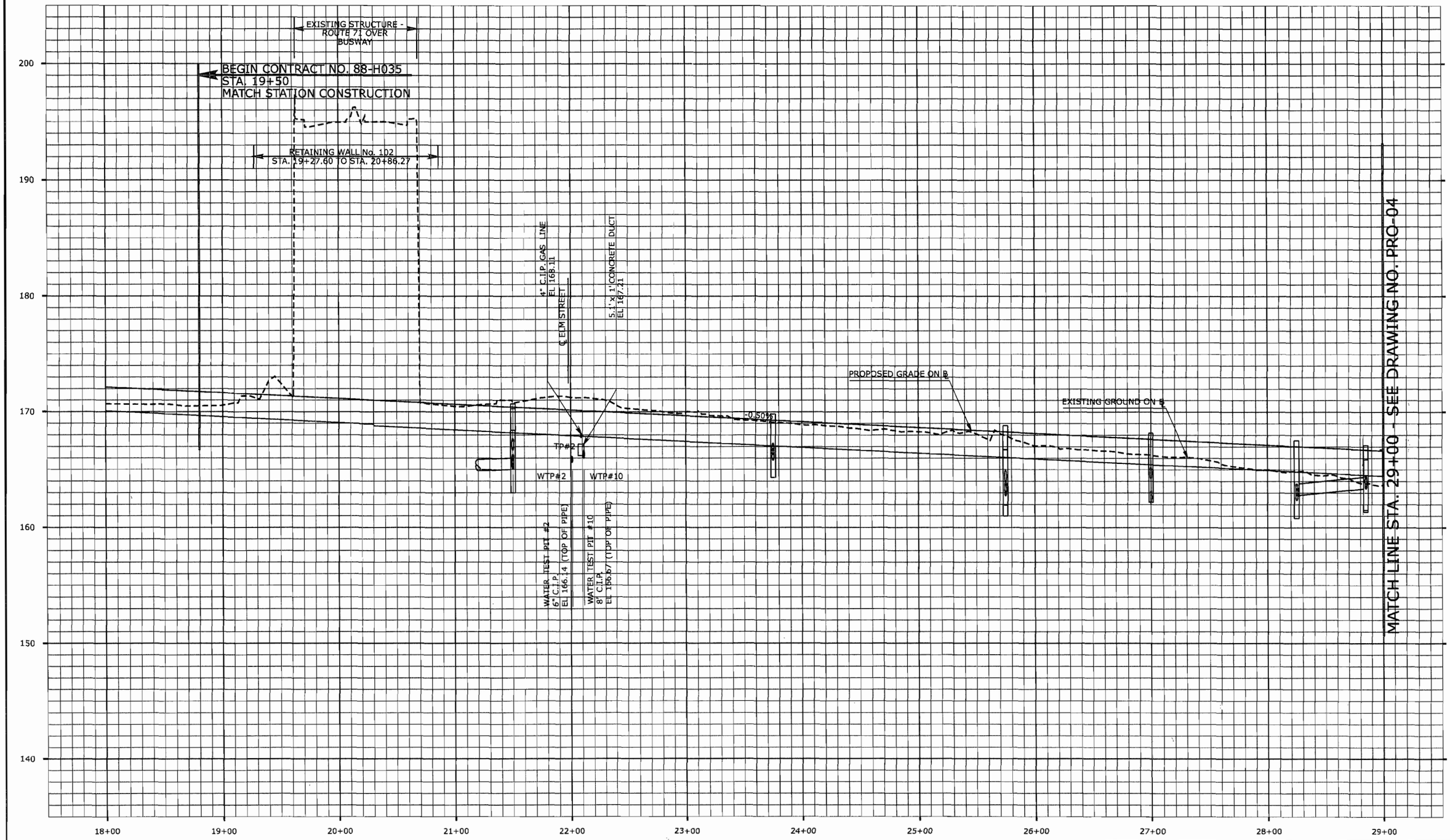

FINAL DESIGN REVIEW

REV.	DATE	REVISION DESCRIPTION	SHEET NO.
-	-	-	-
-	-	-	-
-	-	-	-
-	-	-	-
-	-	-	-
-	-	-	-

THE INFORMATION, INCLUDING ESTIMATED QUANTITIES OF WORK, SHOWN ON THESE SHEETS IS BASED ON LIMITED INVESTIGATIONS BY THE STATE AND IS IN NO WAY WARRANTED TO INDICATE THE CONDITIONS OF ACTUAL QUANTITIES OF WORK WHICH WILL BE REQUIRED.

Plotted: 7/28/2010

DESIGNER/DRAFTER: P. GILKEY
CHECKED BY: T. WALB
HORIZ. SCALE IN FEET 0 40 80
VERT. SCALE IN FEET 0 4 8

STATE OF CONNECTICUT
DEPARTMENT OF TRANSPORTATION

Filename: P:\General\Outgoing\ConnDOT\2010_0727-DEP Permit\HW_MSH_088_H035_PRO-03.dgn

SIGNATURE/ BLOCK: URS CORPORATION AES
APPROVED BY: -
DATE: -

PROJECT TITLE: NEW BRITAIN - HARTFORD BUSWAY

TOWN: NEW BRITAIN
DRAWING TITLE: BUSWAY PROFILE

PROJECT NO. 88-H035
DRAWING NO. PRO-03
SHEET NO. S

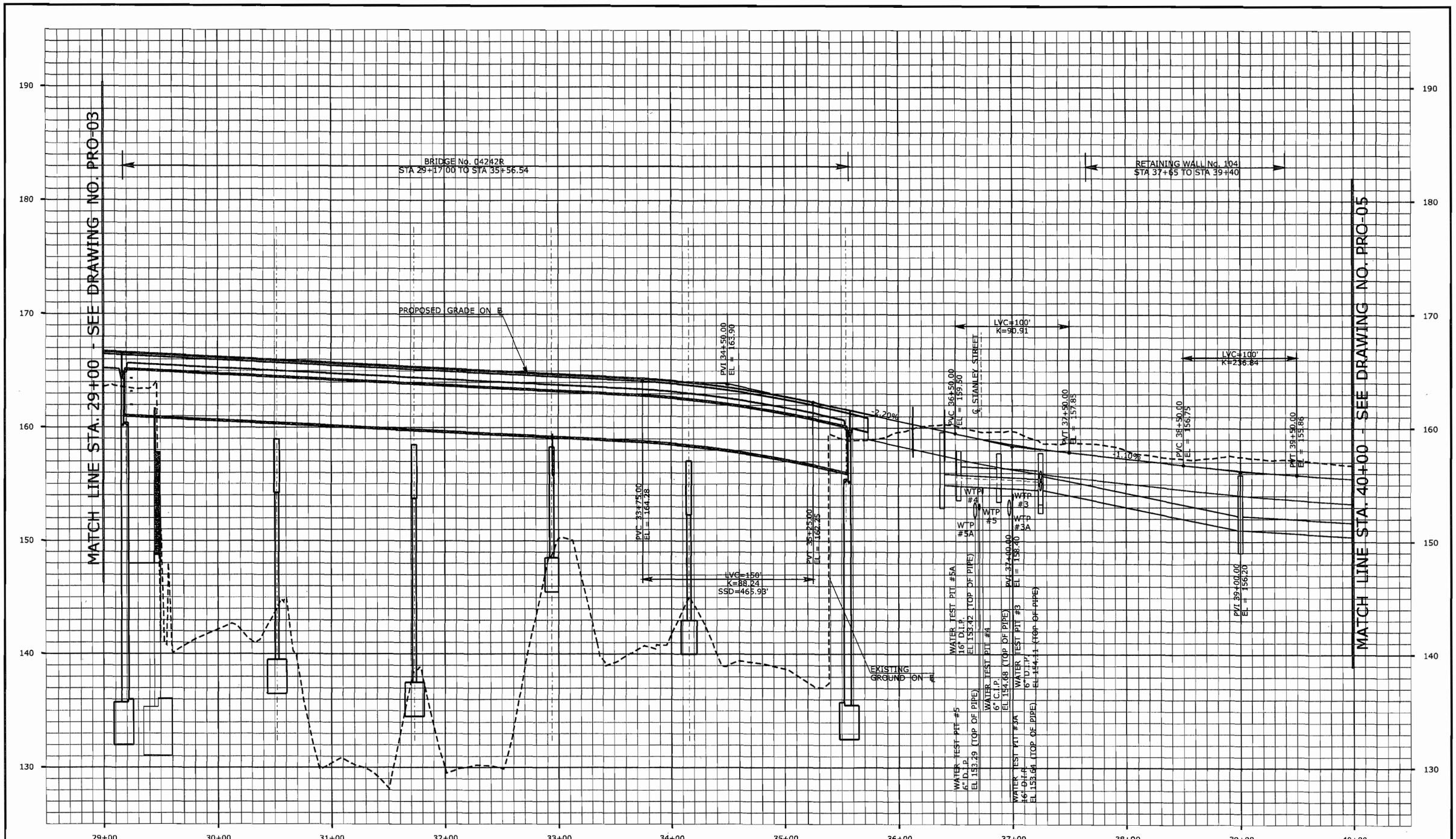

FINAL DESIGN REVIEW

REV.	DATE	REVISION DESCRIPTION	SHEET NO.
-	-	-	-
-	-	-	-
-	-	-	-
-	-	-	-
-	-	-	-
-	-	-	-
-	-	-	-

THE INFORMATION, INCLUDING ESTIMATED QUANTITIES OF WORK, SHOWN ON THESE *SHEETS IS BASED ON LIMITED* INVESTIGATIONS BY THE STATE AND IS IN NO WAY WARRANTED TO INDICATE THE CONDITIONS OF ACTUAL QUANTITIES OF WORK WHICH WILL BE REQUIRED.

Plotted: 7/28/2010

DESIGNER/DRAFTER: P. GILKEY
CHECKED BY: T. WALB
HORIZ. SCALE IN FEET 0 40 80
VERT. SCALE IN FEET 0 4 8

STATE OF CONNECTICUT
DEPARTMENT OF TRANSPORTATION

Filename: P:\General\Outgoing\ConnDOT\2010_0727-DEP Permit\HW_MSH_088_H035_PRO-04.dgn

SIGNATURE/BLOCK: **URS CORPORATION AES**
APPROVED BY: -
DATE: -

PROJECT TITLE: **NEW BRITAIN - HARTFORD BUSWAY**

TOWN: **NEW BRITAIN**
DRAWING TITLE: **BUSWAY PROFILE**

PROJECT NO. **88-H035**
DRAWING NO. **PRO-04**
SHEET NO. **S**

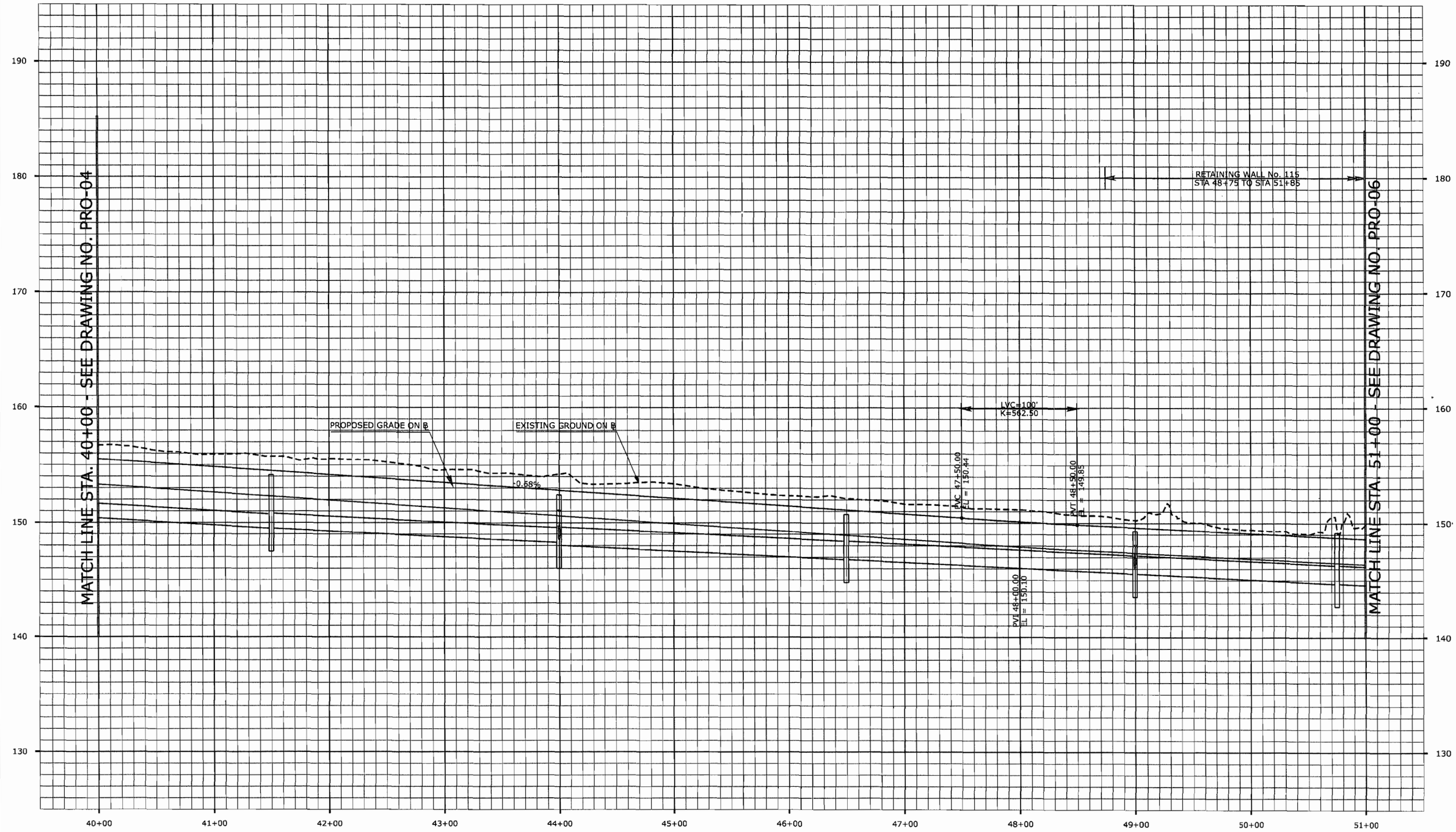

FINAL DESIGN REVIEW

REV.	DATE	REVISION DESCRIPTION	SHEET NO.
-	-	-	-
-	-	-	-
-	-	-	-
-	-	-	-
-	-	-	-
-	-	-	-

THE INFORMATION, INCLUDING ESTIMATED QUANTITIES OF WORK, SHOWN ON THESE SHEETS IS BASED ON LIMITED INVESTIGATIONS BY THE STATE AND IS IN NO WAY WARRANTED TO INDICATE THE CONDITIONS OF ACTUAL QUANTITIES OF WORK WHICH WILL BE REQUIRED.

Plotted: 7/28/2010

DESIGNER/DRAFTER: P. GILKEY
CHECKED BY: T. WALB
HORIZ. SCALE IN FEET 0 40 80
VERT. SCALE IN FEET 0 4 8

STATE OF CONNECTICUT
DEPARTMENT OF TRANSPORTATION

Filename: P:\General\Outgoing\ConnDOT\2010_0727-DEP Permit\HW_MSH_088_H035_PRO-05.dgn

SIGNATURE/BLOCK: URS CORPORATION AES
APPROVED BY: -
DATE: -

PROJECT TITLE: NEW BRITAIN - HARTFORD BUSWAY

TOWN: NEW BRITAIN
DRAWING TITLE: BUSWAY PROFILE

PROJECT NO. 88-H035
DRAWING NO. PRO-05
SHEET NO. S

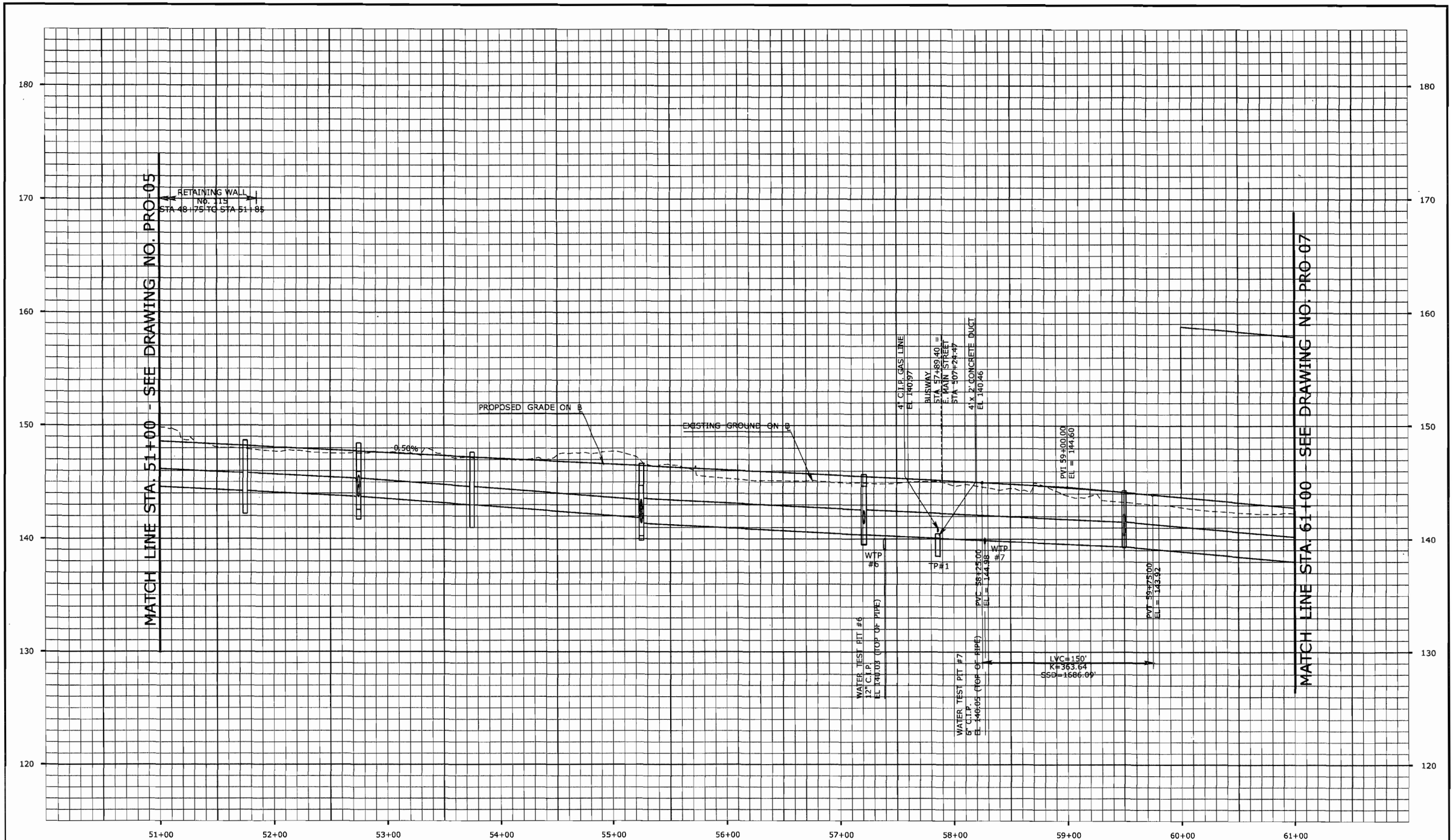

FINAL DESIGN REVIEW

REV.	DATE	REVISION DESCRIPTION	SHEET NO.
-	-	-	-
-	-	-	-
-	-	-	-
-	-	-	-
-	-	-	-
-	-	-	-

THE INFORMATION, INCLUDING ESTIMATED QUANTITIES OF WORK, SHOWN ON THESE SHEETS IS BASED ON LIMITED INVESTIGATIONS BY THE STATE AND IS IN NO WAY WARRANTED TO INDICATE THE CONDITIONS OF ACTUAL QUANTITIES OF WORK WHICH WILL BE REQUIRED.

Plotted: 7/28/2010

DESIGNER/DRAFTER: P. GILKEY
CHECKED BY: T. WALB
HORIZ. SCALE IN FEET 0 40 80
VERT. SCALE IN FEET 0 4 8

STATE OF CONNECTICUT
DEPARTMENT OF TRANSPORTATION

Filename: P:\General\Outgoing\ConnDOT\2010.0727-DEP Permit\HW.MSH.088.H035.PRO-06.dgn

SIGNATURE/BLOCK: URS CORPORATION AES
APPROVED BY: -
DATE: -

PROJECT TITLE: NEW BRITAIN - HARTFORD BUSWAY

TOWN: NEW BRITAIN
DRAWING TITLE: BUSWAY PROFILE

PROJECT NO. 88-H035
DRAWING NO. PRO-06
SHEET NO. S

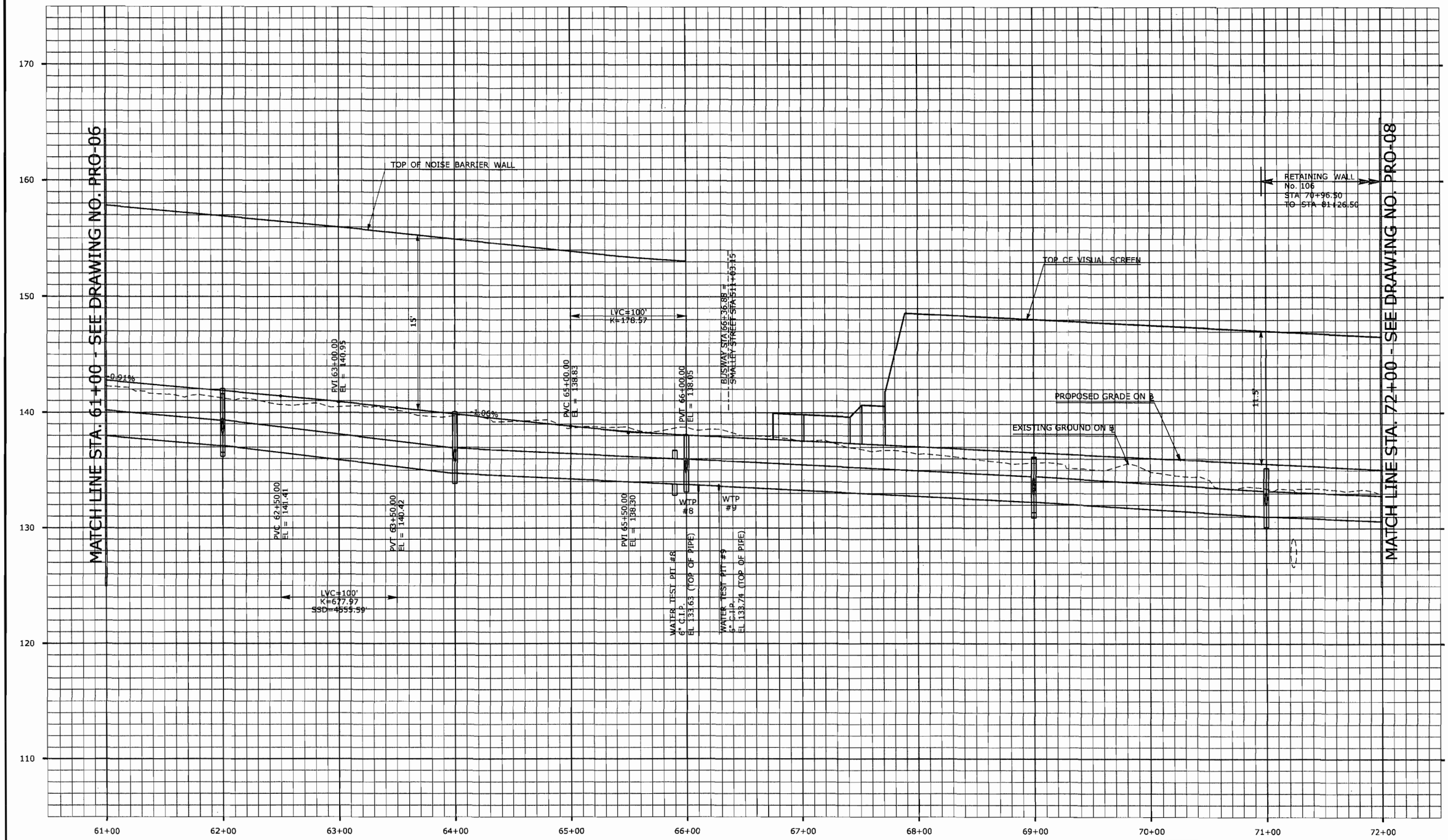

FINAL DESIGN REVIEW

REV.	DATE	REVISION DESCRIPTION	SHEET NO.
-	-	-	-
-	-	-	-
-	-	-	-
-	-	-	-
-	-	-	-
-	-	-	-

THE INFORMATION, INCLUDING ESTIMATED QUANTITIES OF WORK, SHOWN ON THESE SHEETS IS BASED ON LIMITED INVESTIGATIONS BY THE STATE AND IS IN NO WAY WARRANTED TO INDICATE THE CONDITIONS OF ACTUAL QUANTITIES OF WORK WHICH WILL BE REQUIRED.

Plotted: 7/28/2010

DESIGNER/DRAFTER: P. GILKEY
CHECKED BY: T. WALB
HORIZ. SCALE IN FEET 0 40 80
VERT. SCALE IN FEET 0 4 8

STATE OF CONNECTICUT
DEPARTMENT OF TRANSPORTATION

Filename: P:\General\Outgoing\ConnDOT\2010_0727-DEP Permit\HW_MSH_088_H035_PRO-07.dgn

SIGNATURE/BLOCK: URS CORPORATION AES
APPROVED BY: -
DATE: -

PROJECT TITLE: NEW BRITAIN - HARTFORD BUSWAY

TOWN: NEW BRITAIN

DRAWING TITLE: BUSWAY PROFILE

PROJECT NO. 88-H035
DRAWING NO. PRO-07
SHEET NO. S

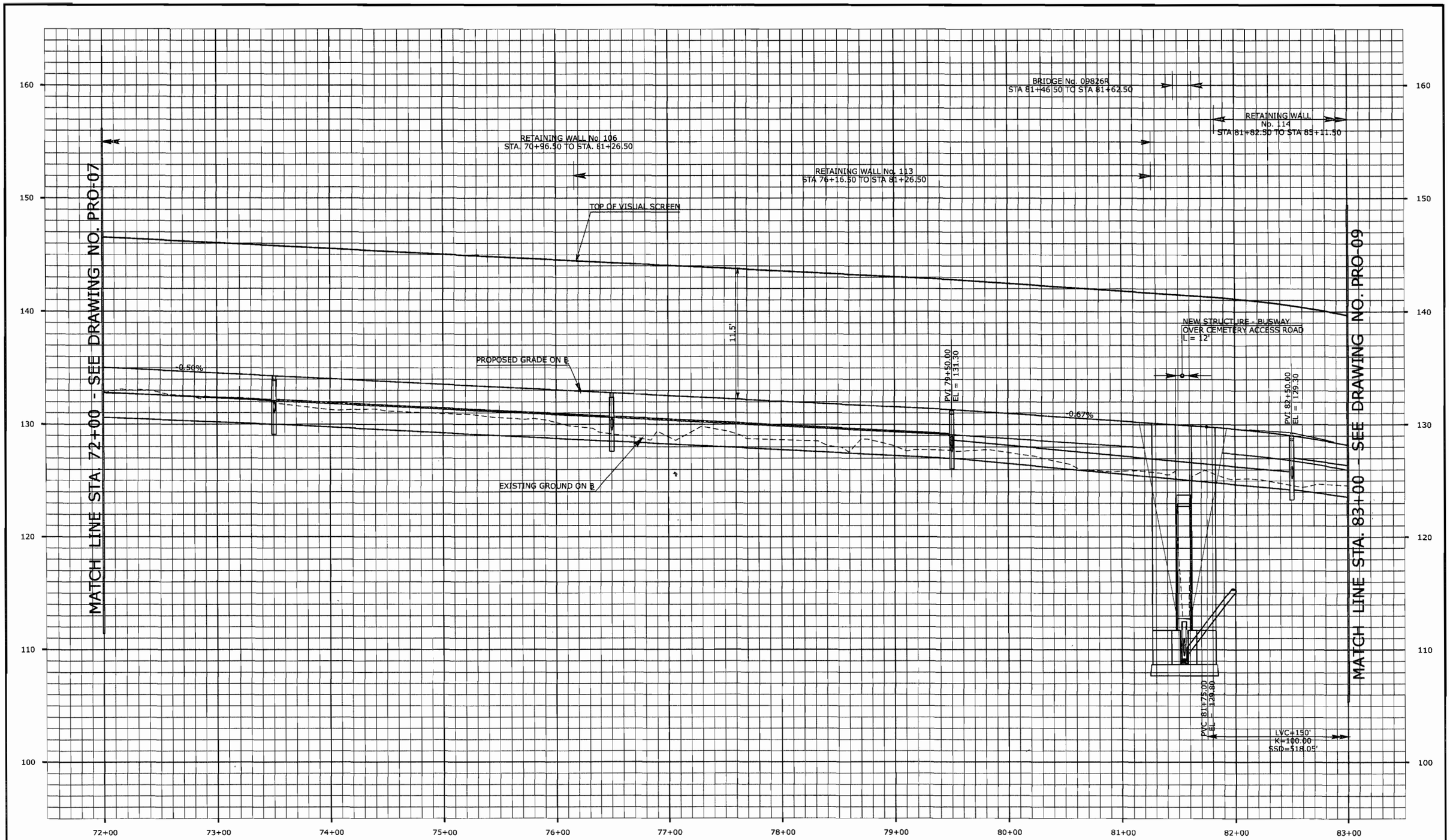

FINAL DESIGN REVIEW

REV.	DATE	REVISION DESCRIPTION	SHEET NO.
-	-	-	-
-	-	-	-
-	-	-	-
-	-	-	-
-	-	-	-
-	-	-	-

THE INFORMATION, INCLUDING ESTIMATED QUANTITIES OF WORK, SHOWN ON THESE SHEETS IS BASED ON LIMITED INVESTIGATIONS BY THE STATE AND IS IN NO WAY WARRANTED TO INDICATE THE CONDITIONS OF ACTUAL QUANTITIES OF WORK WHICH WILL BE REQUIRED.

Plotted: 7/28/2010

DESIGNER/DRAFTER: P. GILKEY
CHECKED BY: T. WALB
HORIZ. SCALE IN FEET 0 40 80
VERT. SCALE IN FEET 0 4 8

STATE OF CONNECTICUT
DEPARTMENT OF TRANSPORTATION

Filename: P:\General\Outgoing\ConnDOT\2010.0727-DEP Permit\HW_MSH_088_H035_PRO-08.dgn

SIGNATURE/BLOCK: URS CORPORATION AES
APPROVED BY:
DATE: -

PROJECT TITLE: NEW BRITAIN - HARTFORD BUSWAY

TOWN: NEW BRITAIN

DRAWING TITLE: BUSWAY PROFILE

PROJECT NO. 88-H035
DRAWING NO. PRO-08
SHEET NO. S

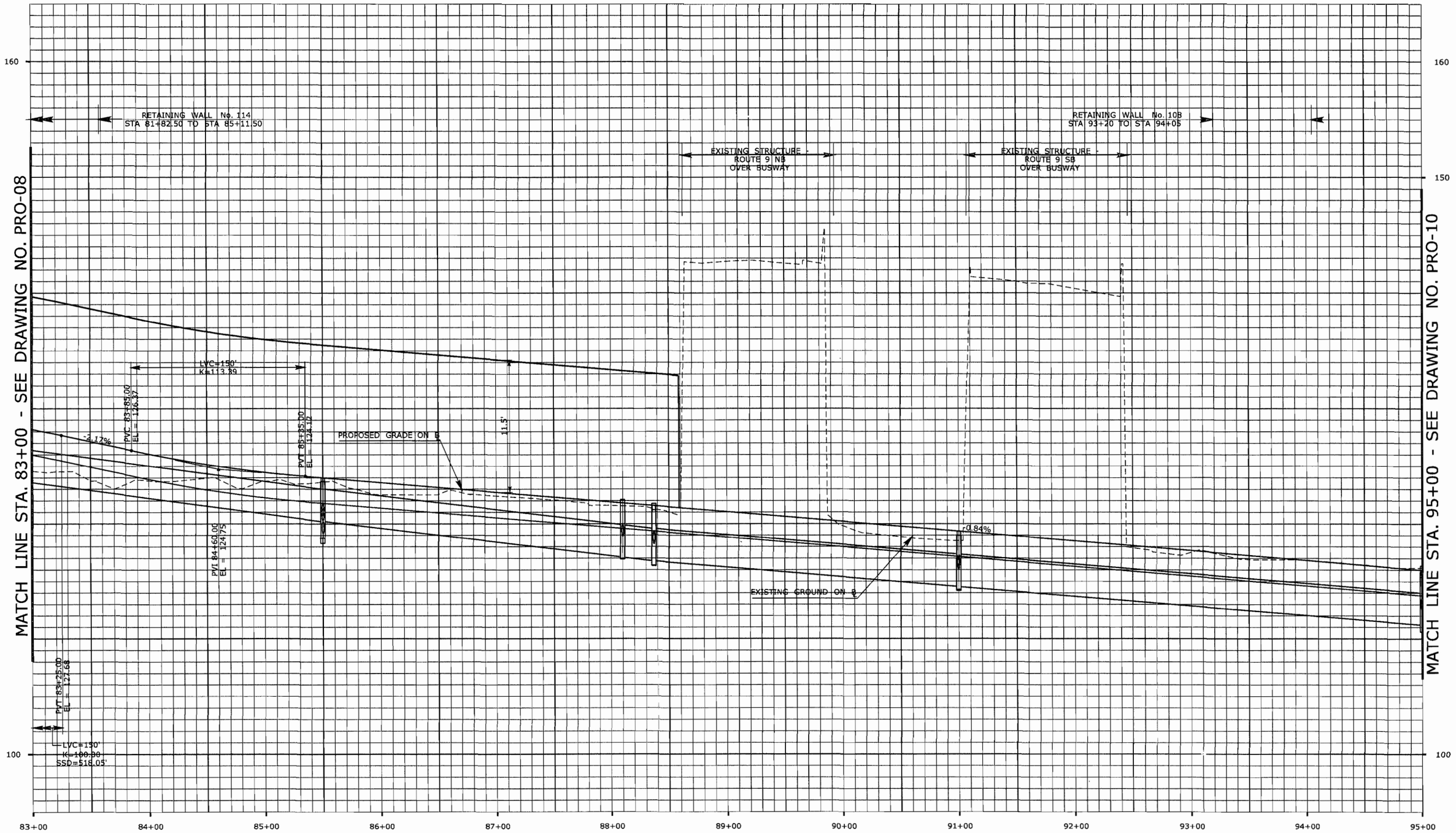

FINAL DESIGN REVIEW

REV.	DATE	REVISION DESCRIPTION	SHEET NO.
-	-	-	-
-	-	-	-
-	-	-	-
-	-	-	-
-	-	-	-
-	-	-	-

THE INFORMATION, INCLUDING ESTIMATED QUANTITIES OF WORK, SHOWN ON THESE SHEETS IS BASED ON LIMITED INVESTIGATIONS BY THE STATE AND IS IN NO WAY WARRANTED TO INDICATE THE CONDITIONS OF ACTUAL QUANTITIES OF WORK WHICH WILL BE REQUIRED.

Plotted: 7/28/2010

DESIGNER/DRAFTER: P. GILKEY
CHECKED BY: T. WALB
HORIZ. SCALE IN FEET 0 40 80
VERT. SCALE IN FEET 0 4 8

STATE OF CONNECTICUT
DEPARTMENT OF TRANSPORTATION

Filename: P:\General\Outgoing\ConnDOT\2010_0727-DEP Permit\HW_MSH_088_H035_PRO-09.dgn

SIGNATURE/BLOCK: URS CORPORATION AES
APPROVED BY: -
DATE: -

PROJECT TITLE: NEW BRITAIN - HARTFORD BUSWAY

TOWN: NEW BRITAIN
DRAWING TITLE: BUSWAY PROFILE

PROJECT NO. 88-H035
DRAWING NO. PRO-09
SHEET NO. S

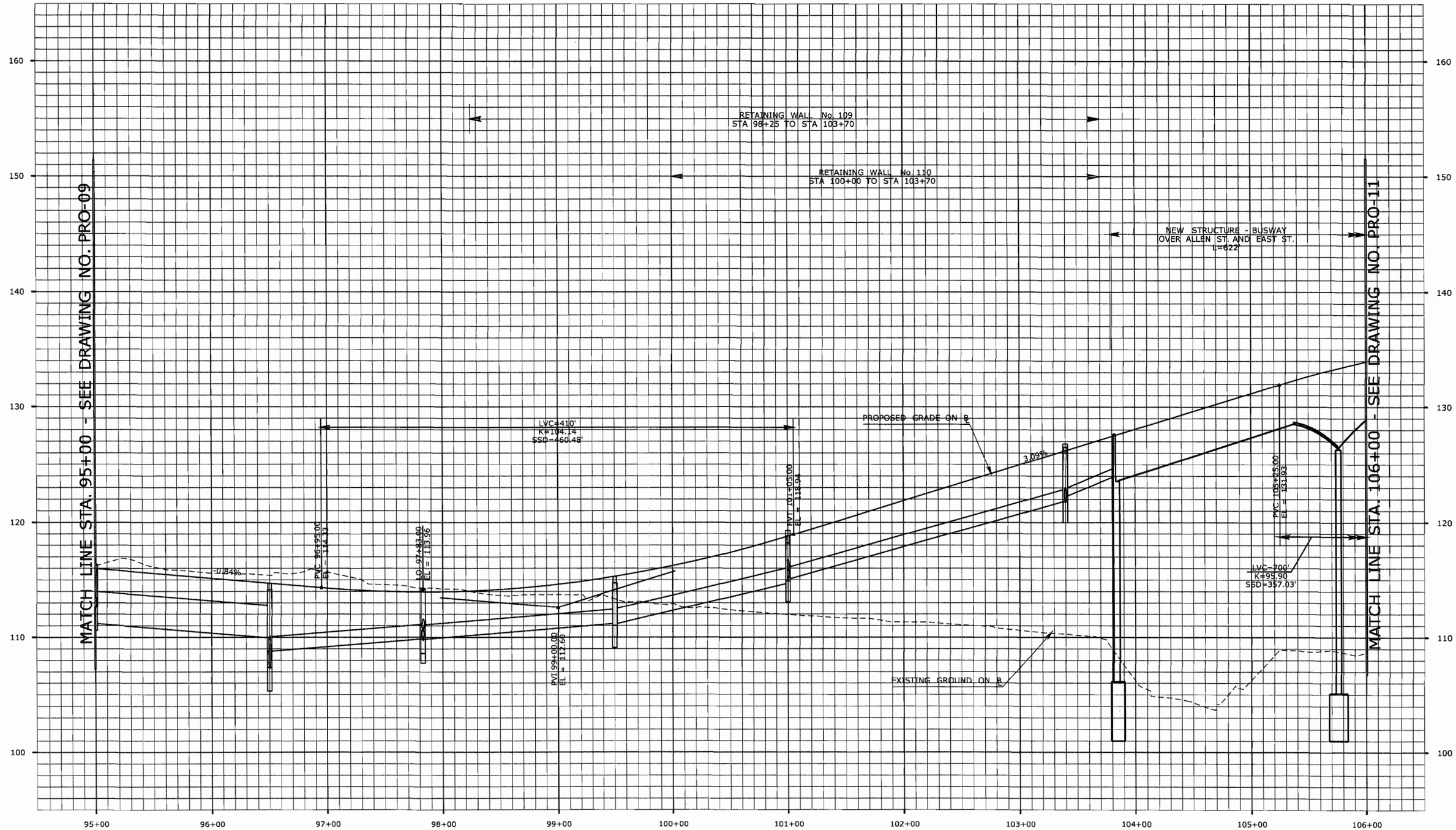

FINAL DESIGN REVIEW

REV.	DATE	REVISION DESCRIPTION	SHEET NO.
-	-	-	-
-	-	-	-
-	-	-	-
-	-	-	-
-	-	-	-
-	-	-	-
-	-	-	-

THE INFORMATION, INCLUDING ESTIMATED QUANTITIES OF WORK, SHOWN ON THESE SHEETS IS BASED ON LIMITED INVESTIGATIONS BY THE STATE AND IS IN NO WAY WARRANTED TO INDICATE THE CONDITIONS OF ACTUAL QUANTITIES OF WORK WHICH WILL BE REQUIRED.

Plotted: 7/28/2010

DESIGNER/DRAFTER: P. GILKEY
CHECKED BY: T. WALB
HORIZ. SCALE IN FEET 0 40 80
VERT. SCALE IN FEET 0 4 8

STATE OF CONNECTICUT
DEPARTMENT OF TRANSPORTATION

SIGNATURE/ BLOCK: URS CORPORATION AES
APPROVED BY:
DATE: -

Filename: P:\General\Outgoing\ConnDOT\2010_0727-DEP Permit\HW_MSH_088_H035_PRO-10.dgn

PROJECT TITLE: NEW BRITAIN - HARTFORD BUSWAY

TOWN: NEW BRITAIN

DRAWING TITLE: BUSWAY PROFILE

PROJECT NO. 88-H035
DRAWING NO. PRO-10
SHEET NO. S

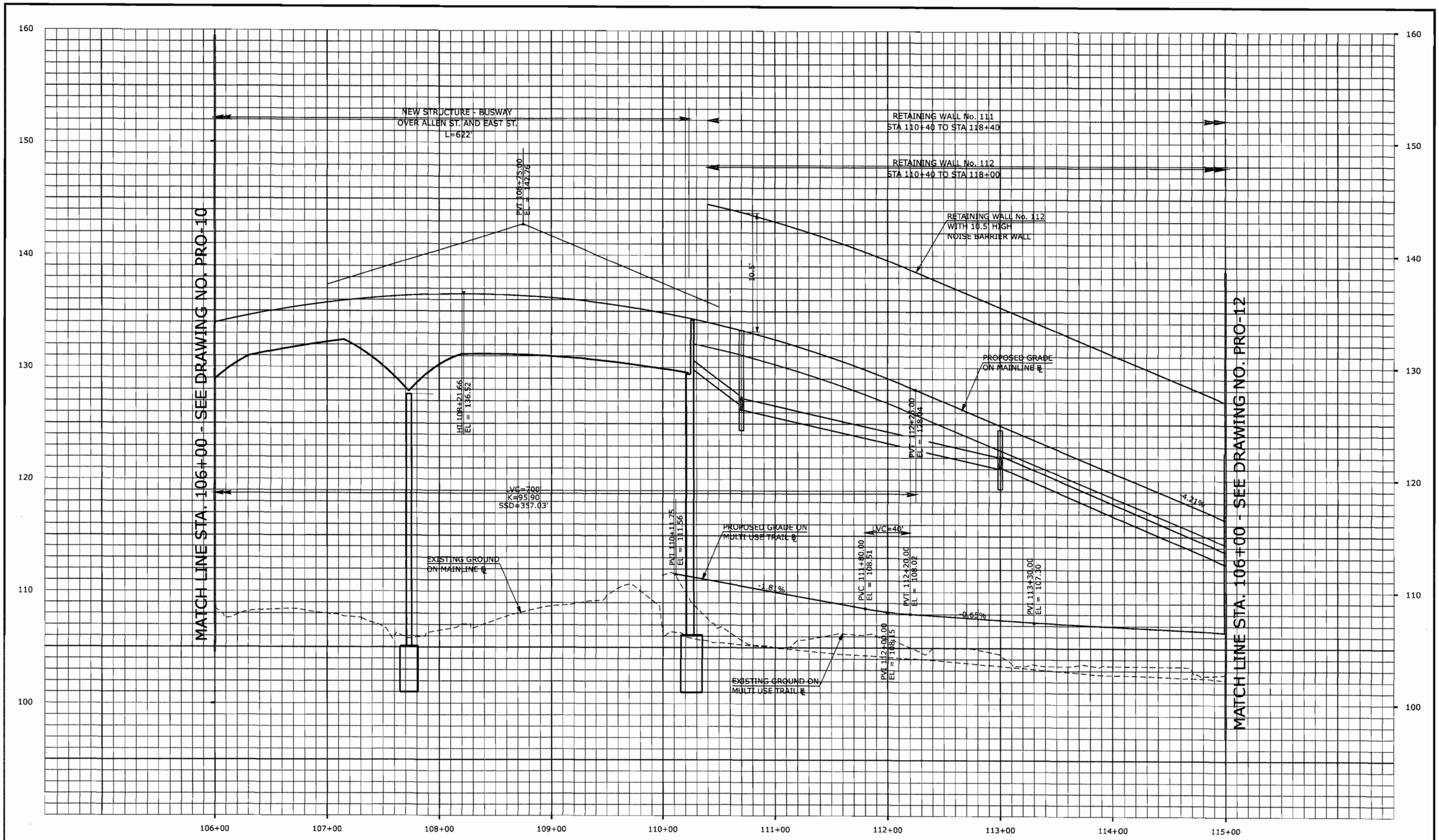

FINAL DESIGN REVIEW

REV.	DATE	REVISION DESCRIPTION	SHEET NO.
-	-	-	-
-	-	-	-
-	-	-	-
-	-	-	-
-	-	-	-
-	-	-	-

THE INFORMATION, INCLUDING ESTIMATED QUANTITIES OF WORK, SHOWN ON THESE SHEETS IS BASED ON LIMITED INVESTIGATIONS BY THE STATE AND IS IN NO WAY WARRANTED TO INDICATE THE CONDITIONS OF ACTUAL QUANTITIES OF WORK WHICH WILL BE REQUIRED.

Plotted: 7/28/2010

DESIGNER/DRAFTER: P. GILKEY
CHECKED BY: T. WALB
HORIZ. SCALE IN FEET 0 40 80
VERT. SCALE IN FEET 0 4 8

STATE OF CONNECTICUT
DEPARTMENT OF TRANSPORTATION

Filename: P:\General\Outgoing\ConnDOT\2010_0727-DEP Permit\HW_MSH_088_H035_PRO-11.dgn

SIGNATURE/BLOCK: URS CORPORATION AES
APPROVED BY: -
DATE: -

PROJECT TITLE: NEW BRITAIN - HARTFORD BUSWAY

TOWN: NEW BRITAIN

DRAWING TITLE: BUSWAY PROFILE

PROJECT NO. 88-H035
DRAWING NO. PRO-11
SHEET NO. S

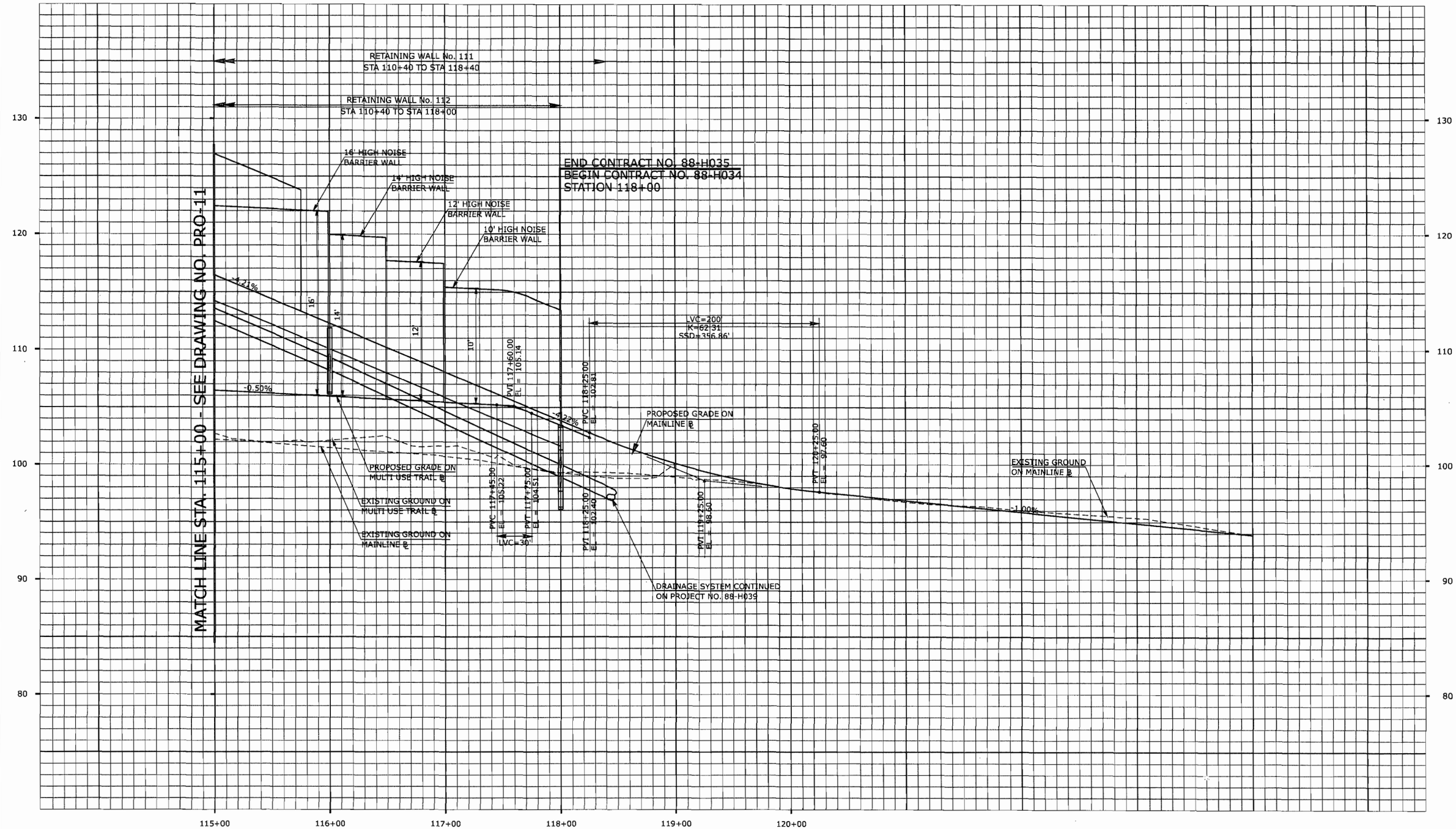

FINAL DESIGN REVIEW

REV.	DATE	REVISION DESCRIPTION	SHEET NO.
-	-	-	-
-	-	-	-
-	-	-	-
-	-	-	-
-	-	-	-
-	-	-	-

THE INFORMATION, INCLUDING ESTIMATED QUANTITIES OF WORK, SHOWN ON THESE SHEETS IS BASED ON LIMITED INVESTIGATIONS BY THE STATE AND IS IN NO WAY WARRANTED TO INDICATE THE CONDITIONS OF ACTUAL QUANTITIES OF WORK WHICH WILL BE REQUIRED.

Plotted: 7/28/2010

DESIGNER/DRAFTER: P. GILKEY
CHECKED BY: T. WALB
HORIZ. SCALE IN FEET 0 40 80
VERT. SCALE IN FEET 0 4 8

STATE OF CONNECTICUT
DEPARTMENT OF TRANSPORTATION

Filename: P:\General\Outgoing\ConnDOT\2010_0727-DEP Permit\HW_MSH_088_H035_PRO-12.dgn

SIGNATURE/BLOCK: URS CORPORATION AES
APPROVED BY: -
DATE: -

PROJECT TITLE: NEW BRITAIN - HARTFORD BUSWAY

TOWN: NEW BRITAIN

DRAWING TITLE: BUSWAY PROFILE

PROJECT NO. 88-H035
DRAWING NO. PRO-12
SHEET NO. S

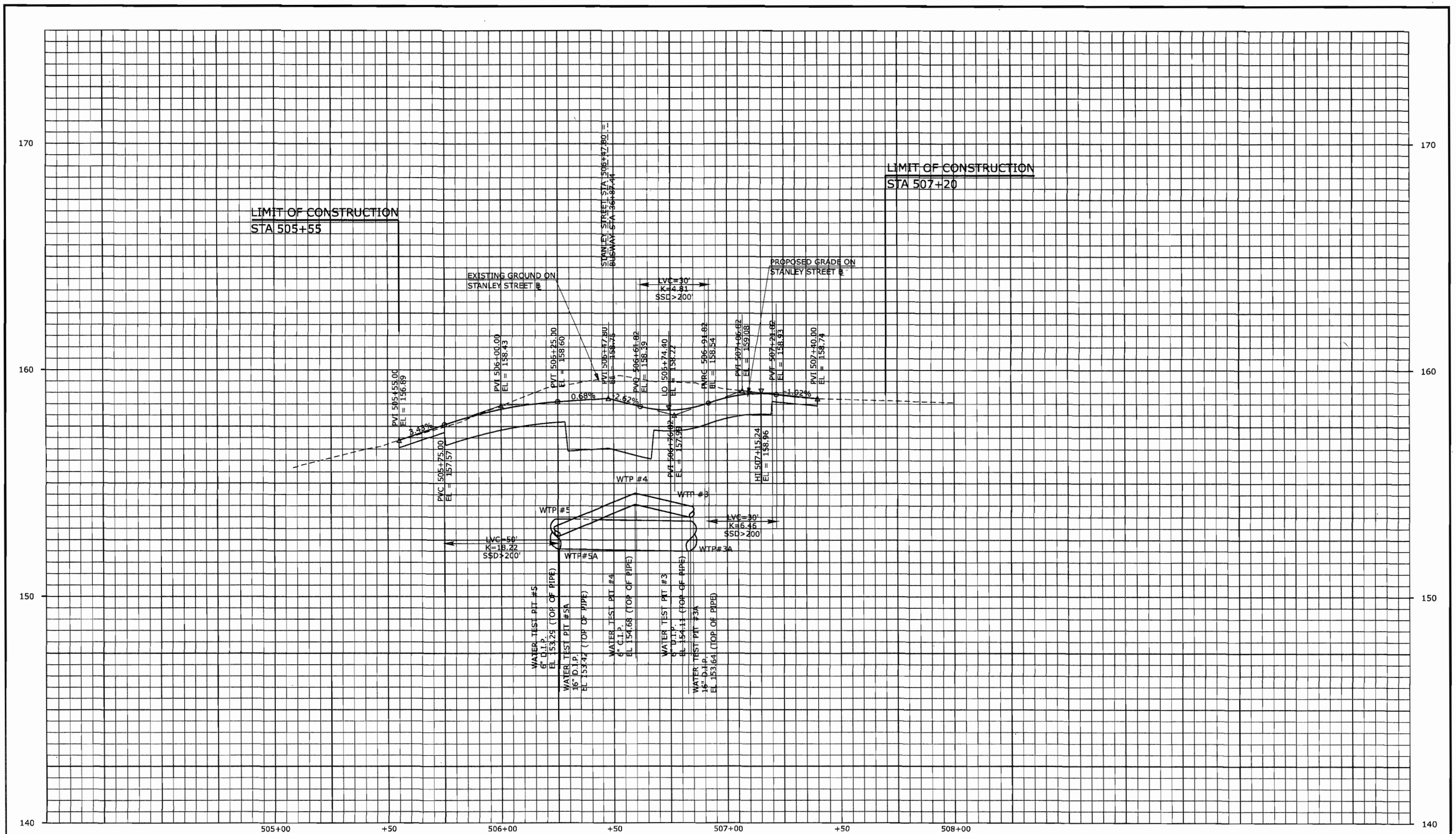

FINAL DESIGN REVIEW

REV.	DATE	REVISION DESCRIPTION	SHEET NO.
-	-	-	-
-	-	-	-
-	-	-	-
-	-	-	-
-	-	-	-
-	-	-	-

THE INFORMATION, INCLUDING ESTIMATED QUANTITIES OF WORK SHOWN ON THESE SHEETS IS BASED ON LIMITED INVESTIGATIONS BY THE STATE AND IS IN NO WAY WARRANTED TO INDICATE THE CONDITIONS OF ACTUAL QUANTITIES OF WORK WHICH WILL BE REQUIRED.

Plotted: 7/28/2010

DESIGNER/DRAFTER: P. GILKEY
CHECKED BY: T. WALB
SCALE IN FEET
20 0 20
SCALE 1"=20' HORIZ.
1"=2' VERT.

STATE OF CONNECTICUT
DEPARTMENT OF TRANSPORTATION

Filename: P:\General\Outgoing\ConnDOT\2010_0727-DEP Permit\HW_MSH_088_H035_PRO-13.dgn

SIGNATURE/BLOCK: URS CORPORATION AES
APPROVED BY: -
DATE: -

PROJECT TITLE: NEW BRITAIN - HARTFORD BUSWAY

TOWN: NEW BRITAIN
DRAWING TITLE: STANLEY STREET PROFILE

PROJECT NO. 88-H035
DRAWING NO. PRO-13
SHEET NO. S

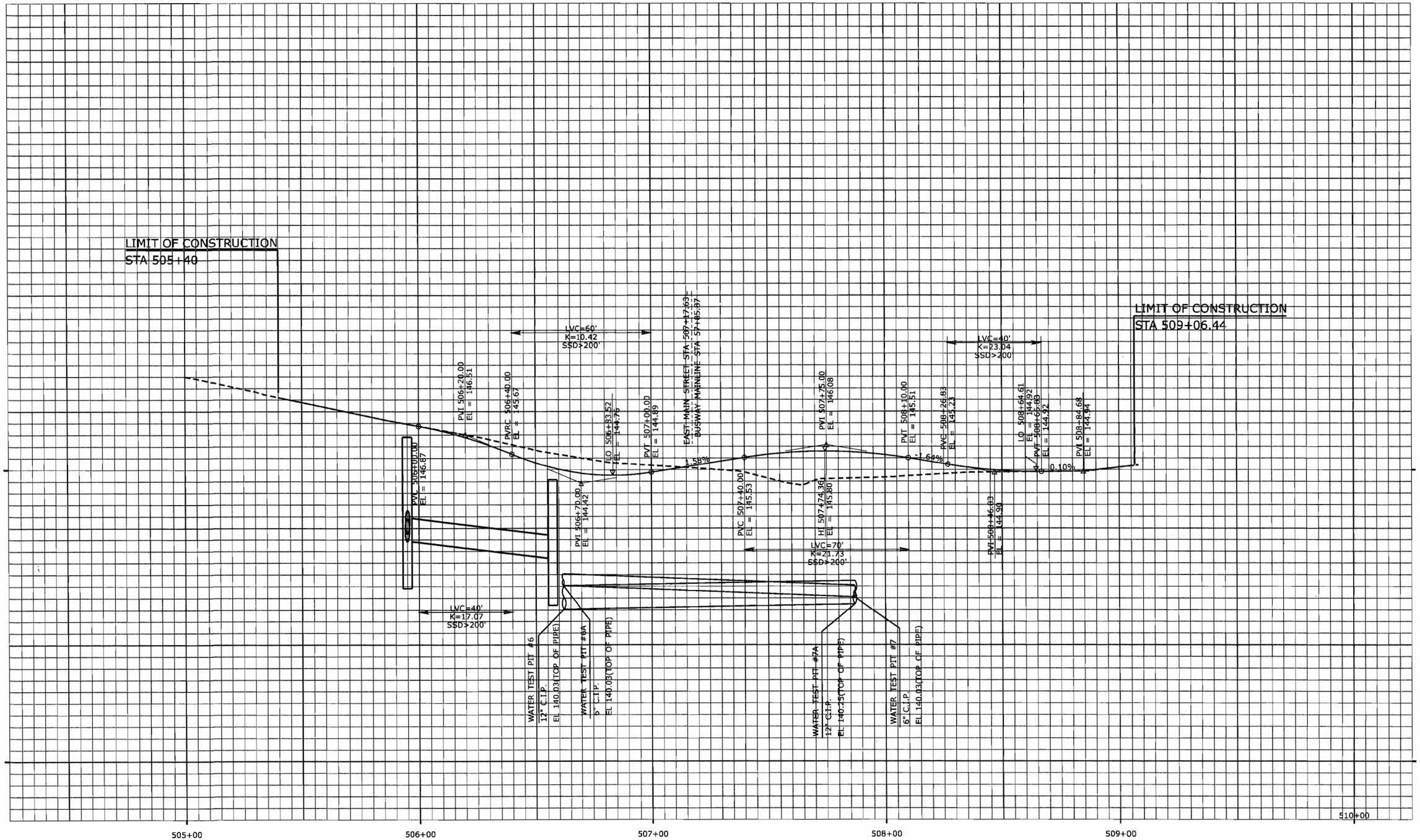

FINAL DESIGN REVIEW

REV.	DATE	REVISION DESCRIPTION	SHEET NO.
-	-	-	-
-	-	-	-
-	-	-	-
-	-	-	-
-	-	-	-
-	-	-	-

THE INFORMATION, INCLUDING ESTIMATED QUANTITIES OF WORK, SHOWN ON THESE SHEETS IS BASED ON LIMITED INVESTIGATIONS BY THE STATE AND IS IN NO WAY WARRANTED TO INDICATE THE CONDITIONS OF ACTUAL QUANTITIES OF WORK WHICH WILL BE REQUIRED.

Plotted: 7/28/2010

DESIGNER/DRAFTER: P. GILKEY
CHECKED BY: T. WALB
HORIZ. SCALE IN FEET 0 20 40
VERT. SCALE IN FEET 0 2 4

STATE OF CONNECTICUT
DEPARTMENT OF TRANSPORTATION

Filename: P:\General\Outgoing\ConnDOT\2010_0727-DEP Permit\HW_MSH_088_H035_PRO-14.dgn

SIGNATURE/BLOCK: URS CORPORATION AES
APPROVED BY: –
DATE: –

PROJECT TITLE: NEW BRITAIN - HARTFORD BUSWAY

TOWN: NEW BRITAIN

DRAWING TITLE: EAST MAIN STREET PROFILE

PROJECT NO. 88-H035
DRAWING NO. PRO-14
SHEET NO. S

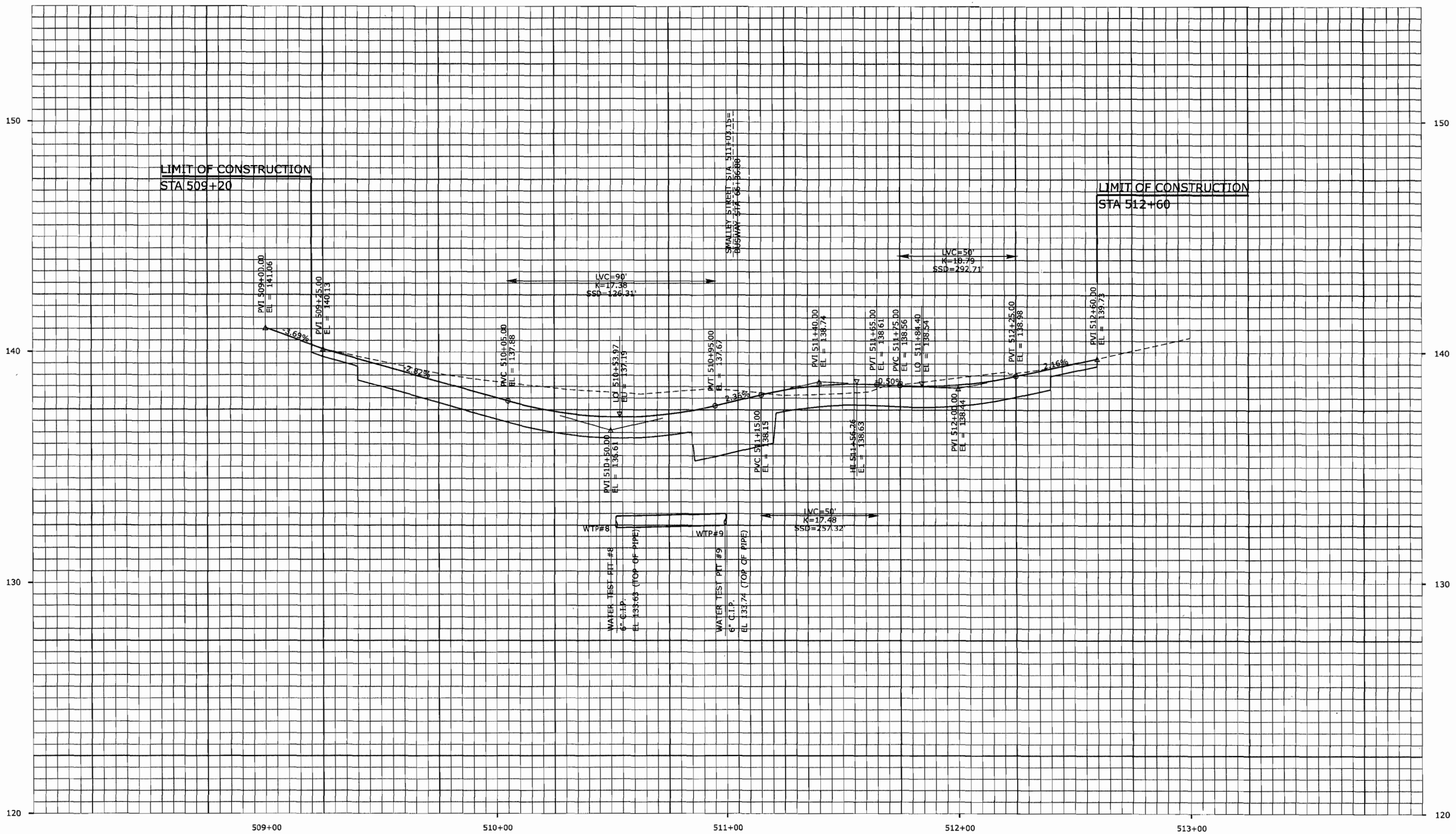

FINAL DESIGN REVIEW

REV.	DATE	REVISION DESCRIPTION	SHEET NO.
-	-	-	-
-	-	-	-
-	-	-	-
-	-	-	-
-	-	-	-
-	-	-	-

THE INFORMATION, INCLUDING ESTIMATED QUANTITIES OF WORK, SHOWN ON THESE SHEETS IS BASED ON LIMITED INVESTIGATIONS BY THE STATE AND IS IN NO WAY WARRANTED TO INDICATE THE CONDITIONS OF ACTUAL QUANTITIES OF WORK WHICH WILL BE REQUIRED.

Plotted: 7/28/2010

DESIGNER/DRAFTER: P. GILKEY
CHECKED BY: T. WALB
HORIZ. SCALE IN FEET 0 20 40
VERT. SCALE IN FEET 0 2 4

STATE OF CONNECTICUT
DEPARTMENT OF TRANSPORTATION

Filename: P:\General\Outgoing\ConnDOT\2010_0727-DEP Permit\HW_MSH_088_H035_PRO-15.dgn

SIGNATURE/ BLOCK: URS CORPORATION AES
APPROVED BY: -
DATE: -

PROJECT TITLE: NEW BRITAIN - HARTFORD BUSWAY

TOWN: NEW BRITAIN

DRAWING TITLE: SMALLEY STREET PROFILE

PROJECT NO. 88-H035
DRAWING NO. PRO-15
SHEET NO. S

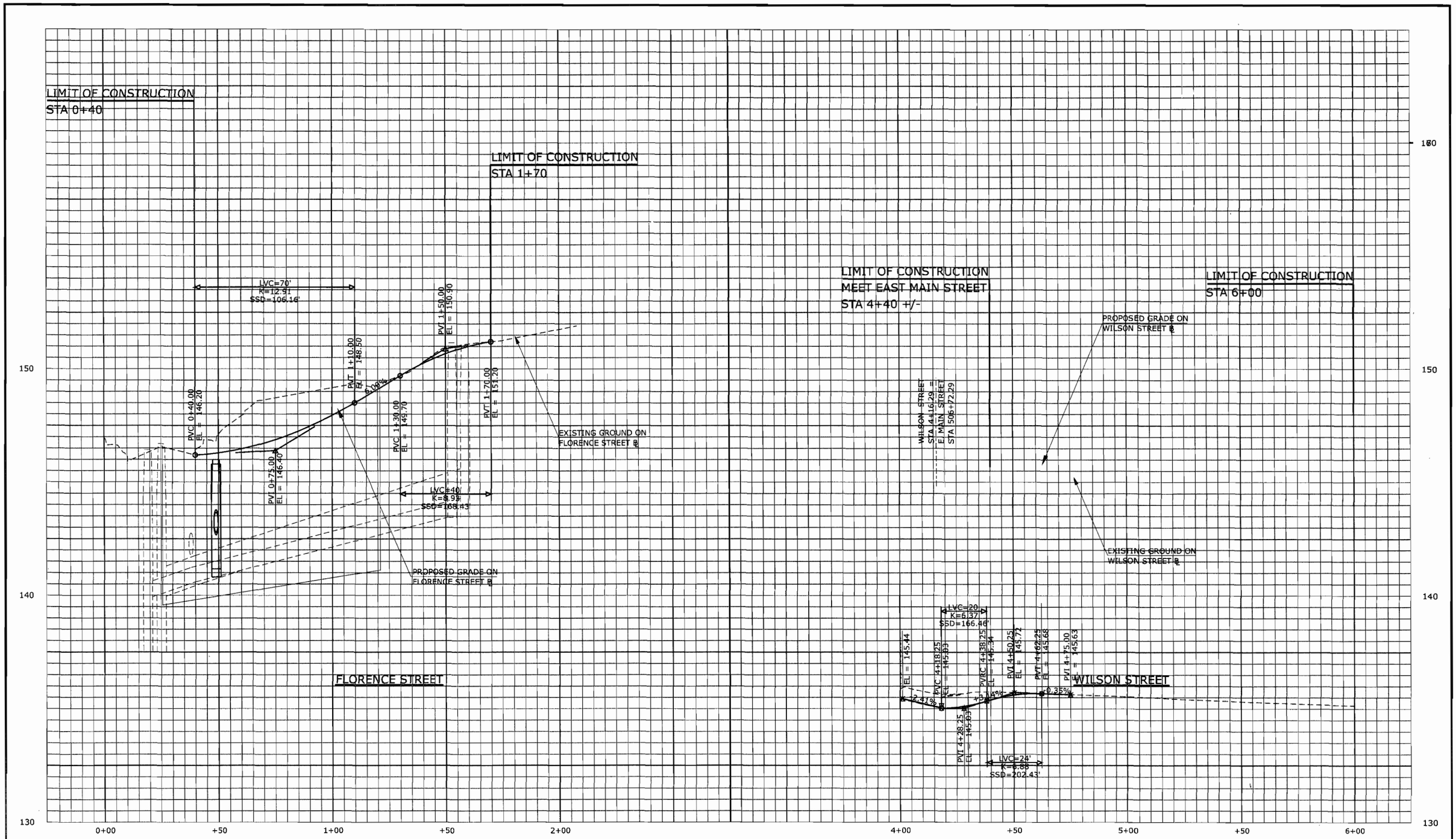

FINAL DESIGN REVIEW

REV.	DATE	REVISION DESCRIPTION	SHEET NO.
-	-	-	-
-	-	-	-
-	-	-	-
-	-	-	-
-	-	-	-
-	-	-	-

THE INFORMATION, INCLUDING ESTIMATED QUANTITIES OF WORK, SHOWN ON THESE SHEETS IS BASED ON LIMITED INVESTIGATIONS BY THE STATE AND IS IN NO WAY WARRANTED TO INDICATE THE CONDITIONS OF ACTUAL QUANTITIES OF WORK WHICH WILL BE REQUIRED.

Plotted: 7/28/2010

DESIGNER/DRAFTER: P. GILKEY
CHECKED BY: T. WALB
HORIZ. SCALE IN FEET 0 20 40
VERT. SCALE IN FEET 0 2 4

STATE OF CONNECTICUT
DEPARTMENT OF TRANSPORTATION

Filename: P:\General\Outgoing\ConnDOT\2010_0727-DEP Permit\HW_MSH_088_H035_PRO-16.dgn

SIGNATURE/BLOCK: URS CORPORATION AES
APPROVED BY: -
DATE: -

PROJECT TITLE: NEW BRITAIN - HARTFORD BUSWAY

TOWN: NEW BRITAIN

DRAWING TITLE: FLORENCE AND WILSON STREET PROFILES

PROJECT NO. 88-H035
DRAWING NO. PRO-16
SHEET NO. S

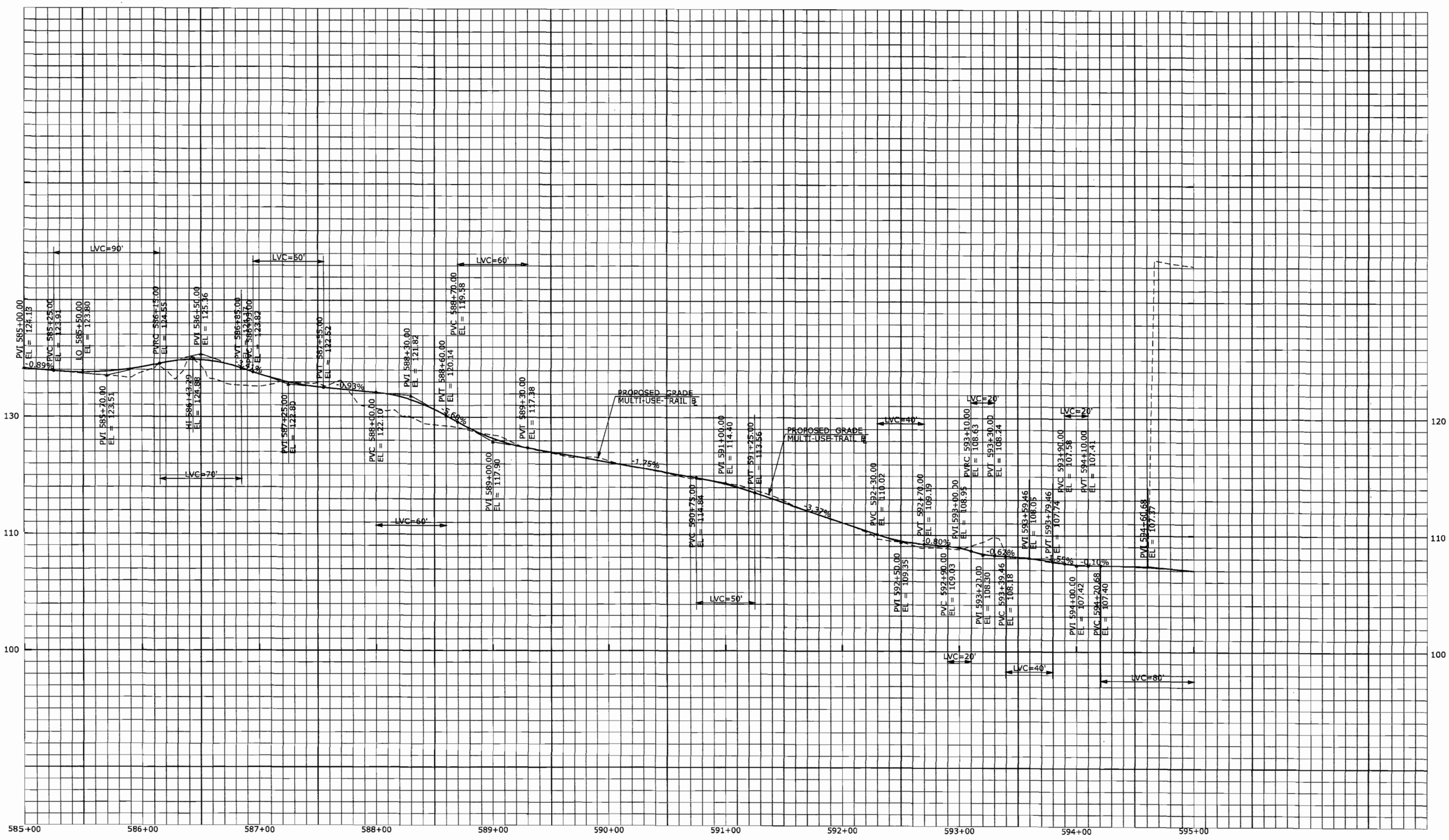

FINAL DESIGN REVIEW

REV.	DATE	REVISION DESCRIPTION	SHEET NO.
-	-	-	-
-	-	-	-
-	-	-	-
-	-	-	-
-	-	-	-
-	-	-	-
-	-	-	-

THE INFORMATION, INCLUDING ESTIMATED QUANTITIES OF WORK, SHOWN ON THESE SHEETS IS BASED ON LIMITED INVESTIGATIONS BY THE STATE AND IS IN NO WAY WARRANTED TO INDICATE THE CONDITIONS OF ACTUAL QUANTITIES OF WORK WHICH WILL BE REQUIRED.

Plotted: 7/28/2010

DESIGNER/DRAFTER: P. GILKEY
CHECKED BY: T. WALB
HORIZ. SCALE IN FEET 0 40 80
VERT. SCALE IN FEET 0 4 8

STATE OF CONNECTICUT
DEPARTMENT OF TRANSPORTATION

Filename: P:\General\Outgoing\ConnDOT\2010.0727-DEP Permit\HW_MSH_088.H035.PRO-17.dgn

SIGNATURE/BLOCK: **URS CORPORATION AES**
APPROVED BY: -
DATE: -

PROJECT TITLE: **NEW BRITAIN - HARTFORD BUSWAY**

TOWN: **NEW BRITAIN**

DRAWING TITLE: **MULTI-USE TRAIL PROFILE**

PROJECT NO. **88-H035**
DRAWING NO. **PRO-17**
SHEET NO. **S**

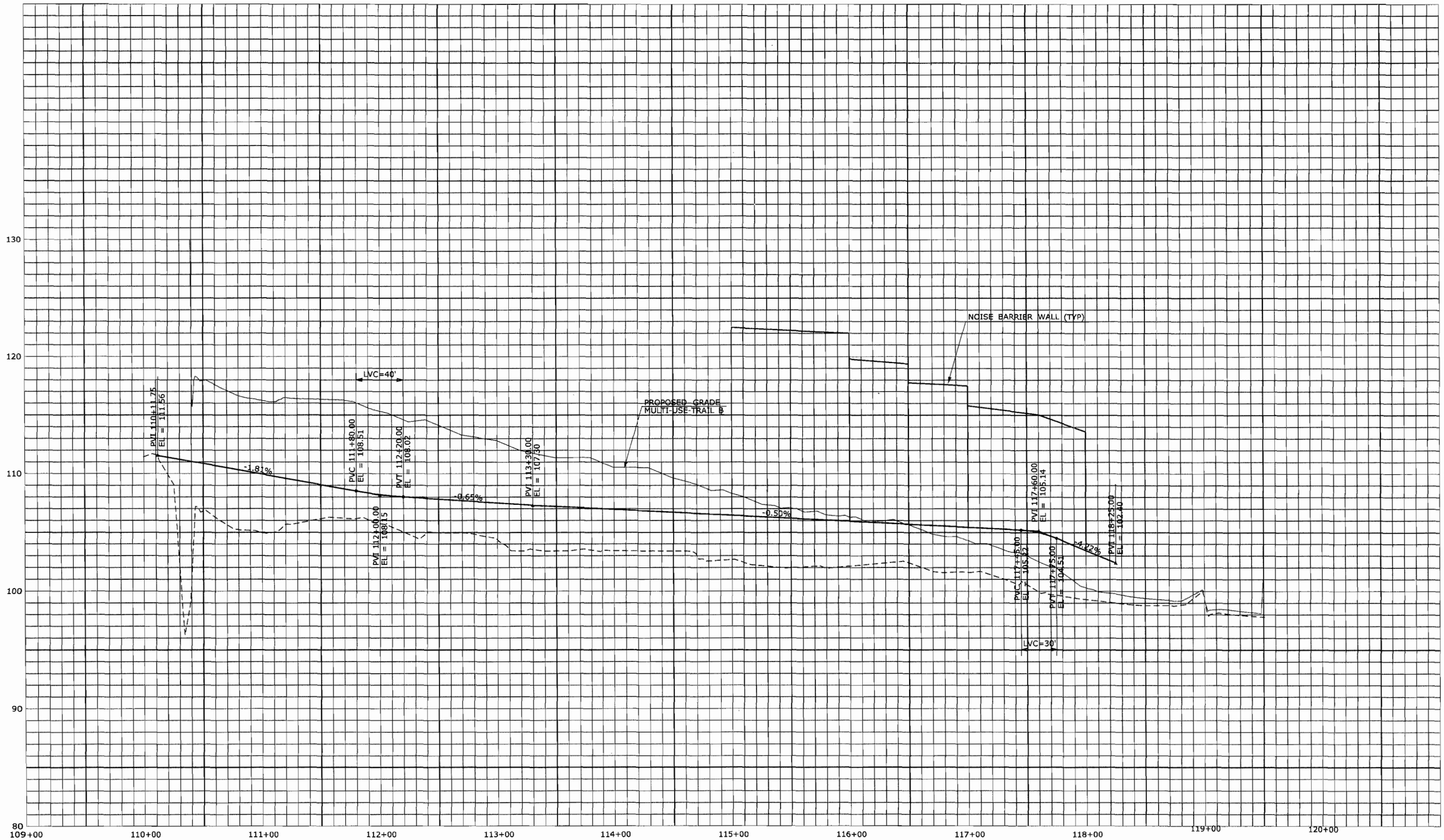

FINAL DESIGN REVIEW

REV.	DATE	REVISION DESCRIPTION	SHEET NO.
-	-	-	-
-	-	-	-
-	-	-	-
-	-	-	-
-	-	-	-
-	-	-	-

THE INFORMATION, INCLUDING ESTIMATED QUANTITIES OF WORK, SHOWN ON THESE SHEETS IS BASED ON LIMITED INVESTIGATIONS BY THE STATE AND IS IN NO WAY WARRANTED TO INDICATE THE CONDITIONS OF ACTUAL QUANTITIES OF WORK WHICH WILL BE REQUIRED.

Plotted: 7/28/2010

DESIGNER/DRAFTER: P. GILKEY
CHECKED BY: T. WALB
HORIZ. SCALE IN FEET 0 40 80
VERT. SCALE IN FEET 0 4 8

STATE OF CONNECTICUT
DEPARTMENT OF TRANSPORTATION

Filename: P:\General\Outgoing\ConnDOT\2010_0727-DEP Permit\HW_MSH_088_H035_PRO-18.dgn

SIGNATURE/BLOCK: URS CORPORATION AES
APPROVED BY: -
DATE: -

PROJECT TITLE: NEW BRITAIN - HARTFORD BUSWAY

TOWN: NEW BRITAIN

DRAWING TITLE: MULTI-USE TRAIL PROFILE

PROJECT NO. 88-H035
DRAWING NO. PRO-18
SHEET NO. S

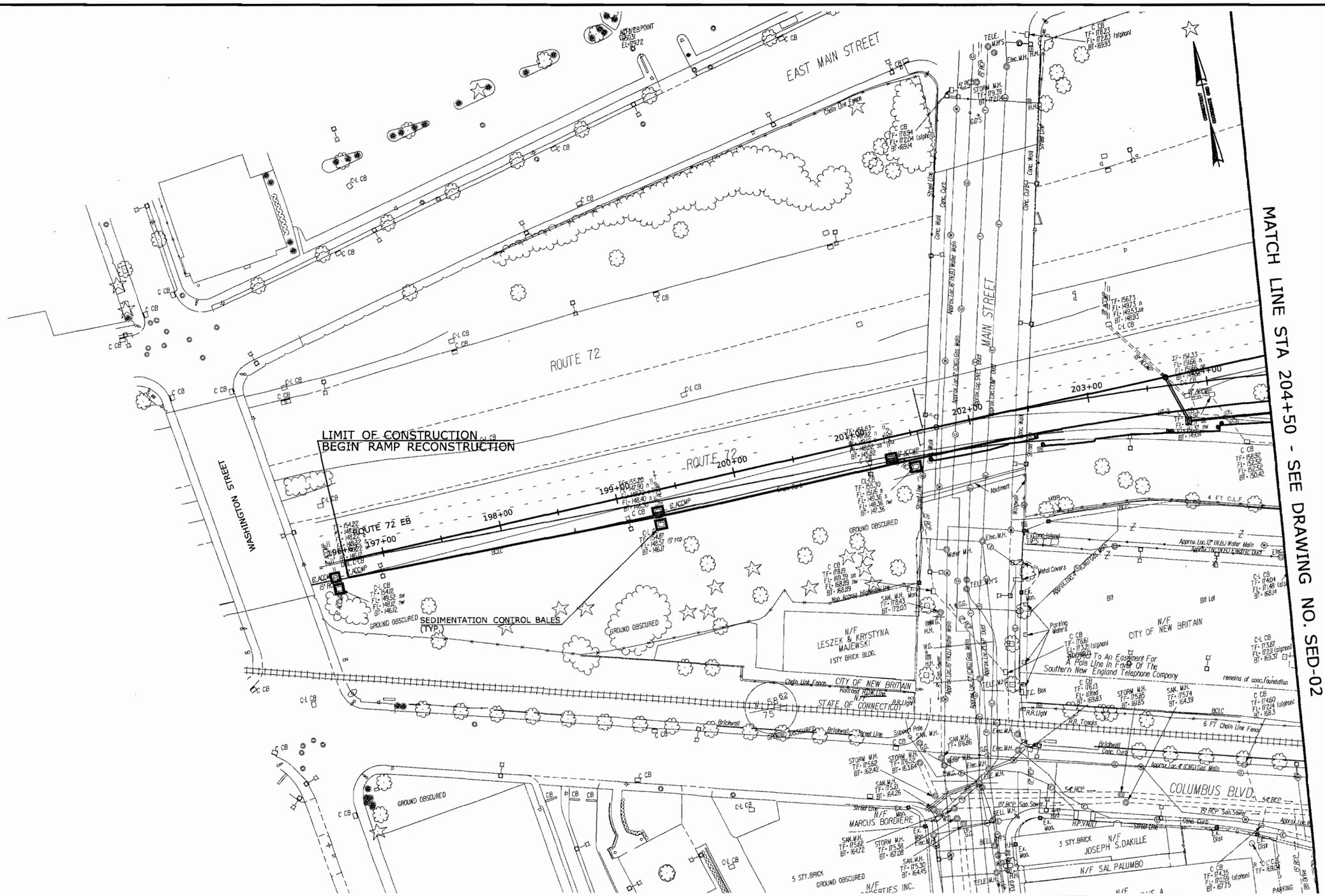

FINAL DESIGN REVIEW

REV.	DATE	REVISION DESCRIPTION	SHEET NO.
-	-	-	-
-	-	-	-
-	-	-	-
-	-	-	-
-	-	-	-
-	-	-	-
-	-	-	-

THE INFORMATION, INCLUDING ESTIMATED QUANTITIES OF WORK, SHOWN ON THESE SHEETS IS BASED ON LIMITED INVESTIGATIONS BY THE STATE AND IS IN NO WAY WARRANTED TO INDICATE THE CONDITIONS OF ACTUAL QUANTITIES OF WORK WHICH WILL BE REQUIRED.

Plotted: 7/28/2010

DESIGNER/DRAFTER: P. GILKEY
CHECKED BY: T. WALB
SCALE IN FEET 0 40 80
SCALE 1"=40'

STATE OF CONNECTICUT
DEPARTMENT OF TRANSPORTATION

Filename: P:\General\Outgoing\ConnDOT\2010_0727-DEP Permit\HW_MSH_088_H035_SED-01.dgn

SIGNATURE/BLOCK: URS CORPORATION AES
APPROVED BY: -
DATE: -

PROJECT TITLE: NEW BRITAIN - HARTFORD BUSWAY

TOWN: NEW BRITAIN

DRAWING TITLE: SEDIMENTATION CONTROL PLAN

PROJECT NO. 88-H035
DRAWING NO. SED-01
SHEET NO. S

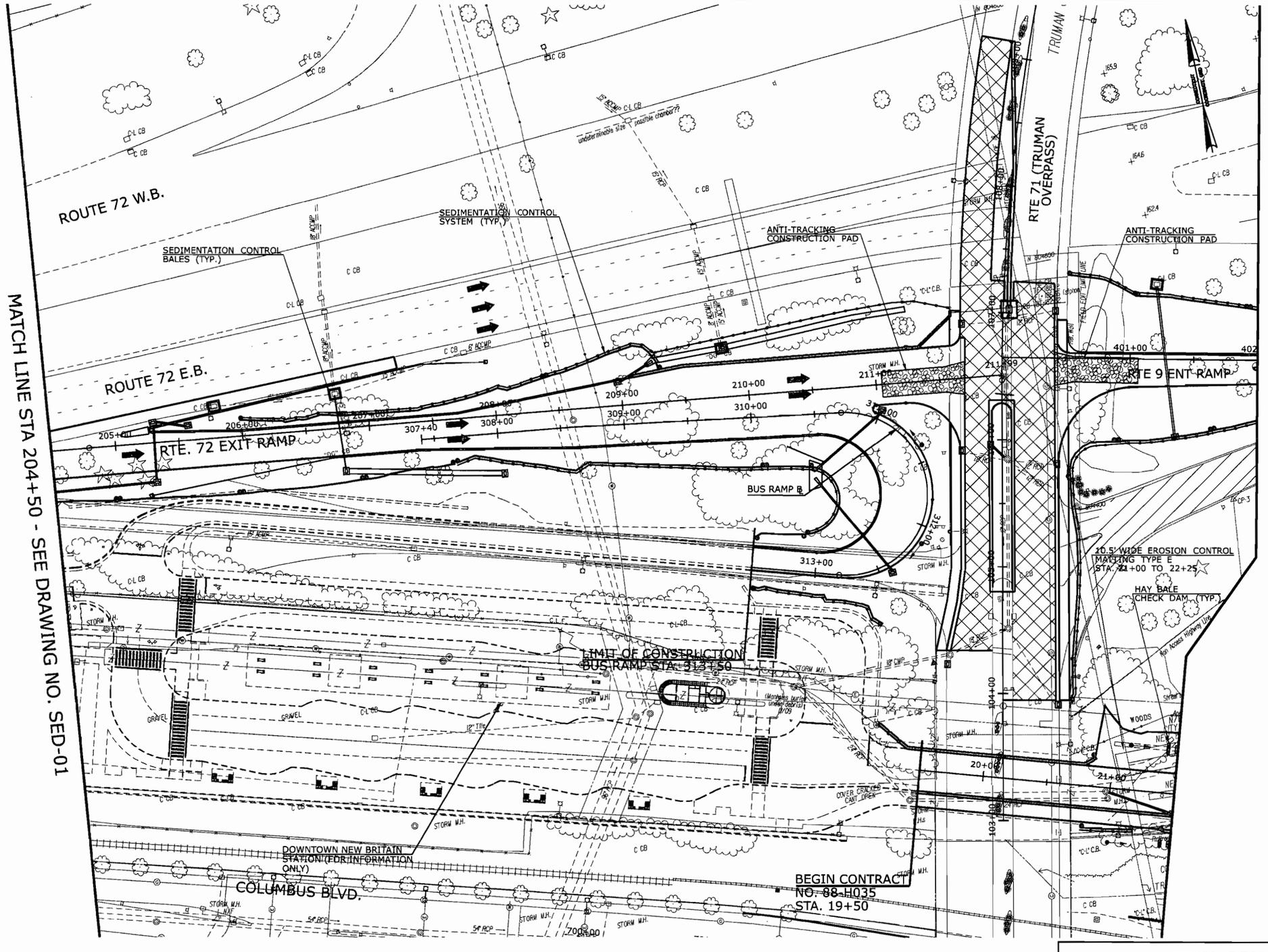

FINAL DESIGN REVIEW

REV.	DATE	REVISION DESCRIPTION	SHEET NO.
-	-	-	-
-	-	-	-
-	-	-	-
-	-	-	-
-	-	-	-
-	-	-	-
-	-	-	-

THE INFORMATION, INCLUDING ESTIMATED QUANTITIES OF WORK, SHOWN ON THESE SHEETS IS BASED ON LIMITED INVESTIGATIONS BY THE STATE AND IS IN NO WAY WARRANTED TO INDICATE THE CONDITIONS OF ACTUAL QUANTITIES OF WORK WHICH WILL BE REQUIRED.

Plotted: 7/28/2010

DESIGNER/DRAFTER: P. GILKEY
CHECKED BY: T. WALB
SCALE IN FEET: 0 40 80
SCALE 1"=40'

STATE OF CONNECTICUT
DEPARTMENT OF TRANSPORTATION

Filename: P:\General\Outgoing\ConnDOT\2010.0727-DEP Permit\HW.MSH.088.H035.SED-02.dgn

SIGNATURE/BLOCK: URS CORPORATION AES
APPROVED BY: -
DATE: -

PROJECT TITLE: NEW BRITAIN - HARTFORD BUSWAY

TOWN: NEW BRITAIN

DRAWING TITLE: SEDIMENTATION CONTROL PLAN

PROJECT NO. 88-H035
DRAWING NO. SED-02
SHEET NO. S

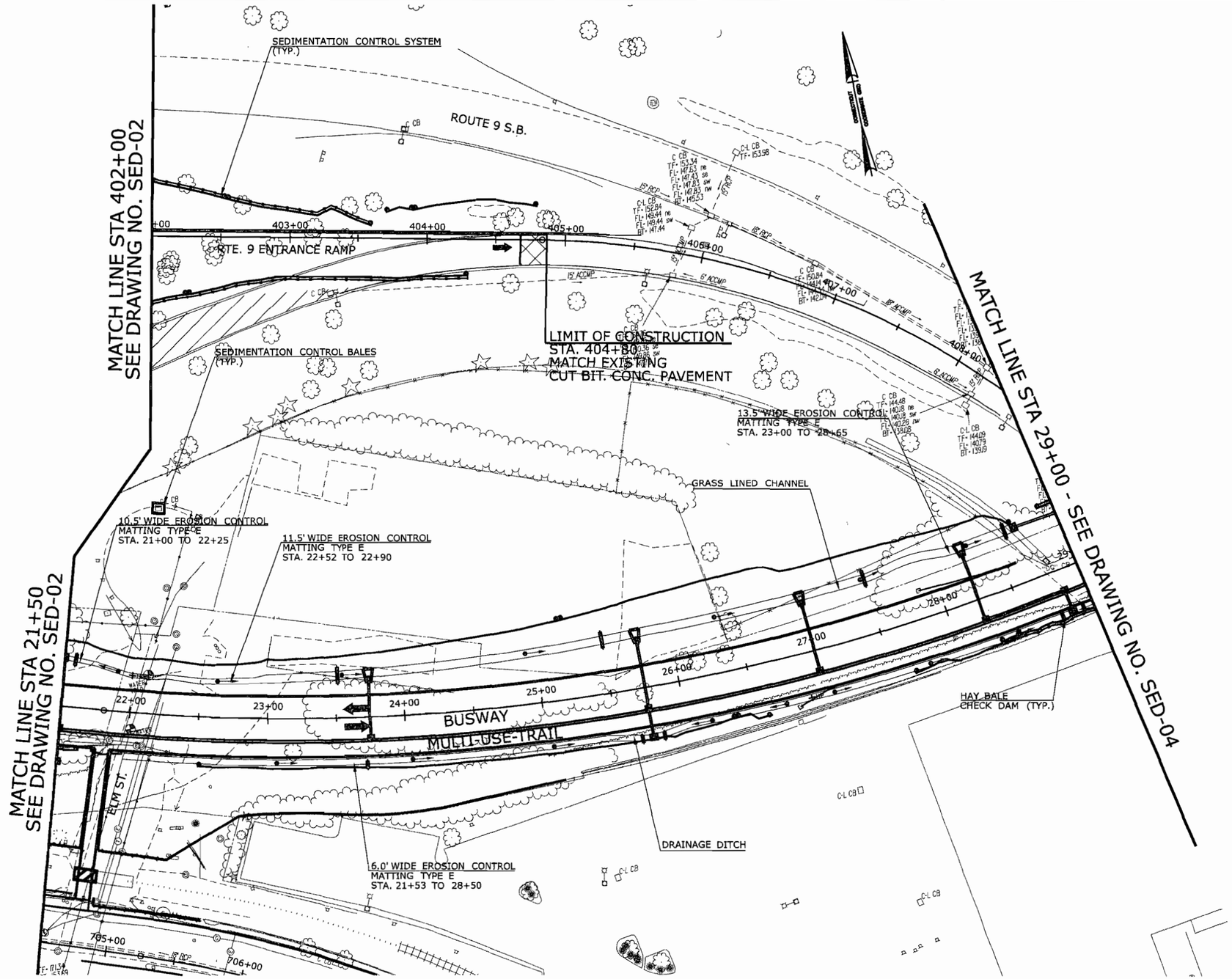

FINAL DESIGN REVIEW

REV.	DATE	REVISION DESCRIPTION	SHEET NO.
-	-	-	-
-	-	-	-
-	-	-	-
-	-	-	-
-	-	-	-
-	-	-	-

THE INFORMATION, INCLUDING ESTIMATED QUANTITIES OF WORK, SHOWN ON THESE SHEETS IS BASED ON LIMITED INVESTIGATIONS BY THE STATE AND IS IN NO WAY WARRANTED TO INDICATE THE CONDITIONS OF ACTUAL QUANTITIES OF WORK WHICH WILL BE REQUIRED.

Plotted: 7/28/2010

DESIGNER/DRAFTER: P. GILKEY
CHECKED BY: T. WALB
SCALE IN FEET 0 40 80
SCALE 1"=40'

STATE OF CONNECTICUT
DEPARTMENT OF TRANSPORTATION

Filename: P:\General\Outgoing\ConnDOT\2010.0727-DEP Permit\HW_MSH_088_H035_SED-03.dgn

SIGNATURE/BLOCK: URS CORPORATION AES
APPROVED BY: -
DATE: -

PROJECT TITLE: NEW BRITAIN - HARTFORD BUSWAY

TOWN: NEW BRITAIN

DRAWING TITLE: SEDIMENTATION CONTROL PLAN

PROJECT NO. 88-H035
DRAWING NO. SED-03
SHEET NO. S

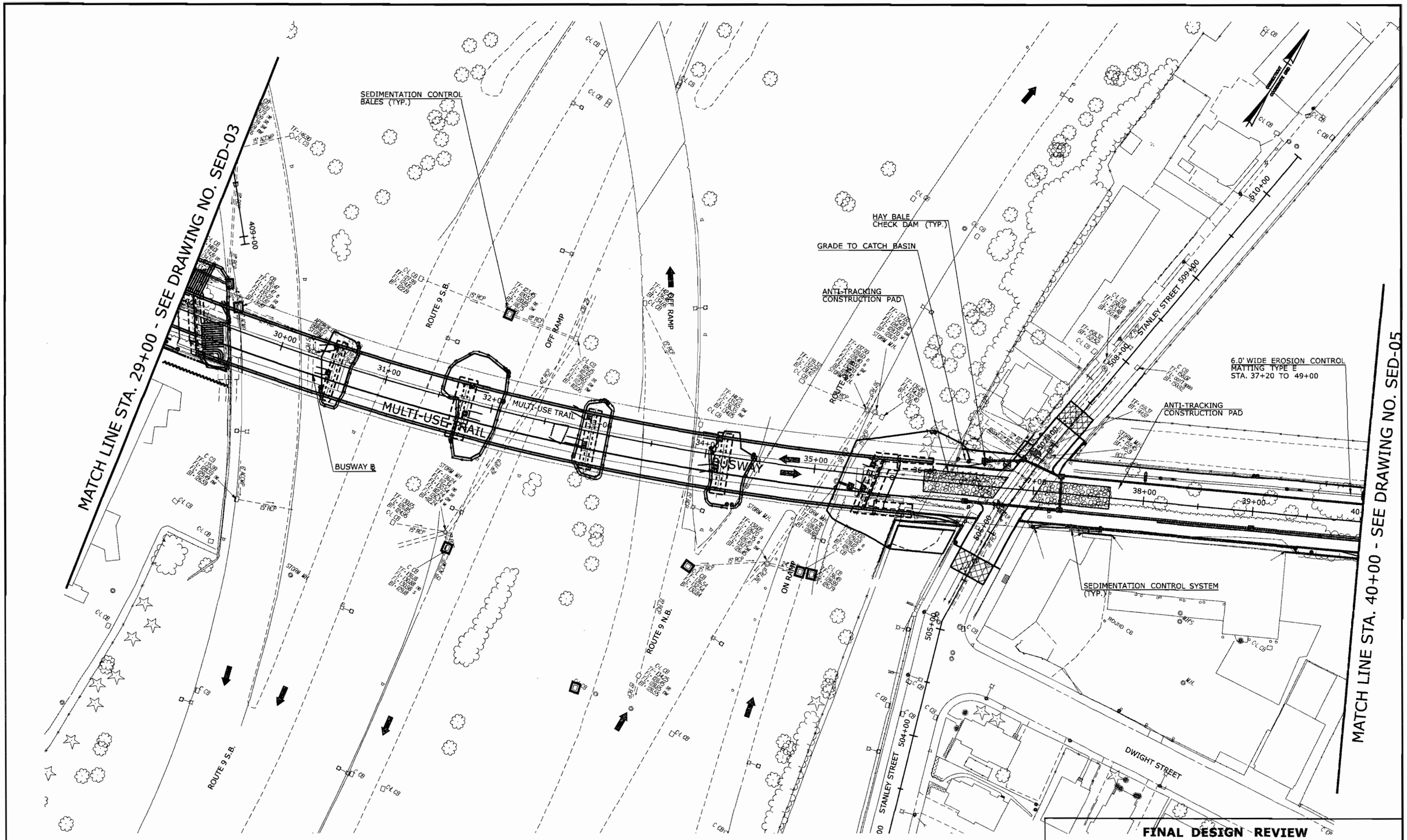

REV.	DATE	REVISION DESCRIPTION	SHEET NO.
-	-	-	-
-	-	-	-
-	-	-	-
-	-	-	-
-	-	-	-
-	-	-	-

THE INFORMATION, INCLUDING ESTIMATED QUANTITIES OF WORK, SHOWN ON THESE SHEETS IS BASED ON LIMITED INVESTIGATIONS BY THE STATE AND IS IN NO WAY WARRANTED TO INDICATE THE CONDITIONS OF ACTUAL QUANTITIES OF WORK WHICH WILL BE REQUIRED.

Plotted: 7/28/2010

DESIGNER/DRAFTER: P. GILKEY
CHECKED BY: T. WALB
SCALE IN FEET 0 40 80
SCALE 1"=40'

STATE OF CONNECTICUT
DEPARTMENT OF TRANSPORTATION

Filename: P:\General\Outgoing\ConnDOT\2010_0727-DEP Permit\HW_MSH_088_H035_SED-04.dgn

SIGNATURE/BLOCK: URS CORPORATION AES
APPROVED BY: -
DATE: -

PROJECT TITLE: NEW BRITAIN - HARTFORD BUSWAY

TOWN: NEW BRITAIN

DRAWING TITLE: SEDIMENTATION CONTROL PLAN

PROJECT NO. 88-H035
DRAWING NO. SED-04
SHEET NO. S

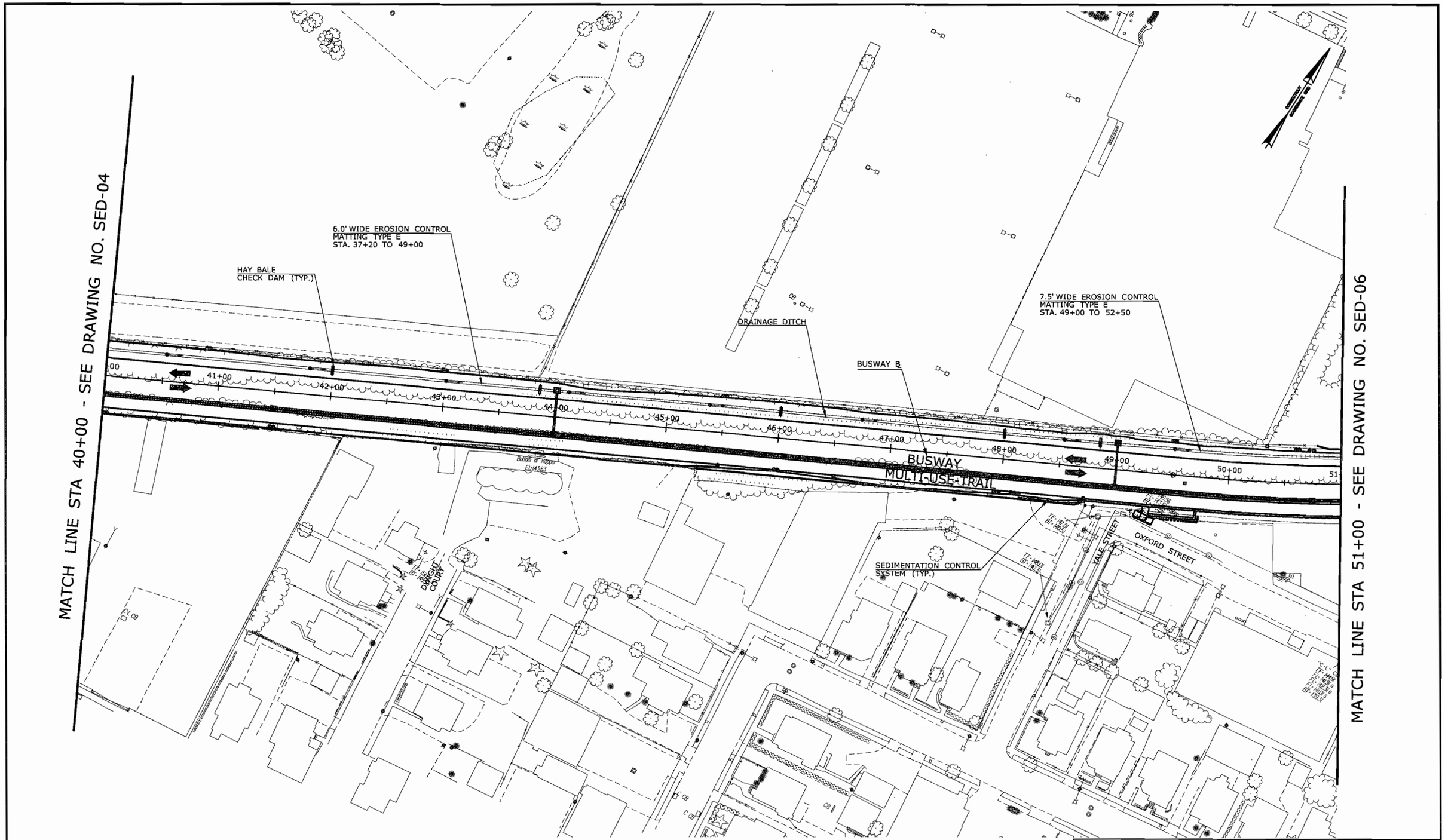

FINAL DESIGN REVIEW

REV.	DATE	REVISION DESCRIPTION	SHEET NO.
-	-	-	-
-	-	-	-
-	-	-	-
-	-	-	-
-	-	-	-
-	-	-	-
-	-	-	-

THE INFORMATION, INCLUDING ESTIMATED QUANTITIES OF WORK, SHOWN ON THESE SHEETS IS BASED ON LIMITED INVESTIGATIONS BY THE STATE AND IS IN NO WAY WARRANTED TO INDICATE THE CONDITIONS OF ACTUAL QUANTITIES OF WORK WHICH WILL BE REQUIRED.

Plotted: 7/28/2010

DESIGNER/DRAFTER: P. GILKEY
CHECKED BY: T. WALB
SCALE IN FEET 0 40 80
SCALE 1"=40'

STATE OF CONNECTICUT
DEPARTMENT OF TRANSPORTATION

Filename: P:\General\Outgoing\ConnDOT\2010_0727-DEP Permit\HW_MSH_088_H035_SED-05.dgn

SIGNATURE/ BLOCK: **URS CORPORATION AES**
APPROVED BY: -
DATE: -

PROJECT TITLE: **NEW BRITAIN - HARTFORD BUSWAY**

TOWN: **NEW BRITAIN**

DRAWING TITLE: **SEDIMENTATION CONTROL PLAN**

PROJECT NO. **88-H035**
DRAWING NO. **SED-05**
SHEET NO. **S**

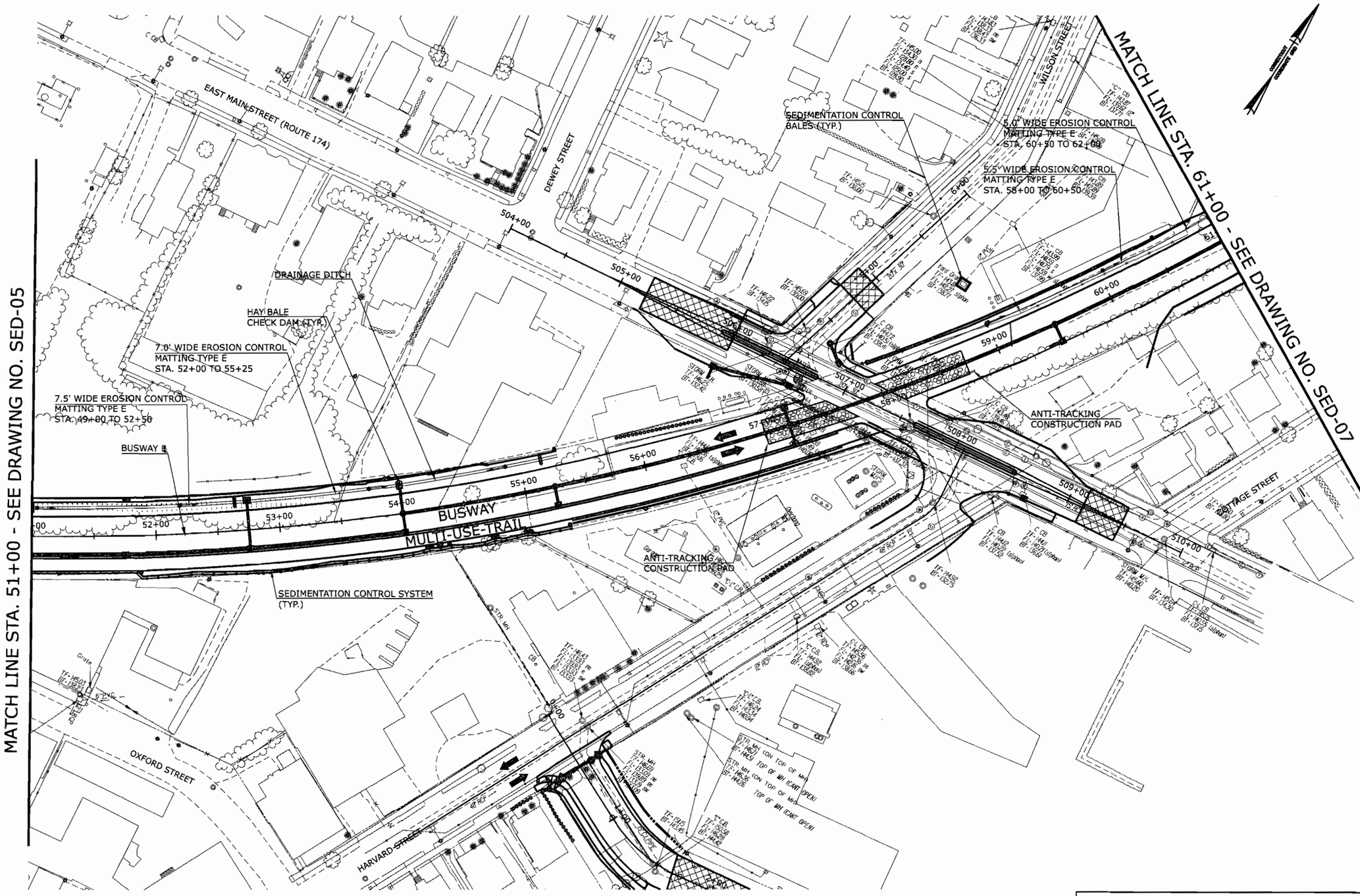

FINAL DESIGN REVIEW

REV.	DATE	REVISION DESCRIPTION	SHEET NO.
-	-	-	-
-	-	-	-
-	-	-	-
-	-	-	-
-	-	-	-
-	-	-	-
-	-	-	-

THE INFORMATION, INCLUDING ESTIMATED QUANTITIES OF WORK, SHOWN ON THESE SHEETS IS BASED ON LIMITED INVESTIGATIONS BY THE STATE AND IS IN NO WAY WARRANTED TO INDICATE THE CONDITIONS OF ACTUAL QUANTITIES OF WORK WHICH WILL BE REQUIRED.

Plotted: 7/28/2010

DESIGNER/DRAFTER: P. GILKEY
CHECKED BY: T. WALB
SCALE IN FEET 0 40 80
SCALE 1"=40'

STATE OF CONNECTICUT
DEPARTMENT OF TRANSPORTATION

Filename: P:\General\Outgoing\ConnDOT\2010_0727-DEP Permit\HW_MSH_088_H035_SED-06.dgn

SIGNATURE/BLOCK: URS CORPORATION AES
APPROVED BY: -
DATE: -

PROJECT TITLE: NEW BRITAIN - HARTFORD BUSWAY

TOWN: NEW BRITAIN

DRAWING TITLE: SEDIMENTATION CONTROL PLAN

PROJECT NO. 88-H035
DRAWING NO. SED-06
SHEET NO. S

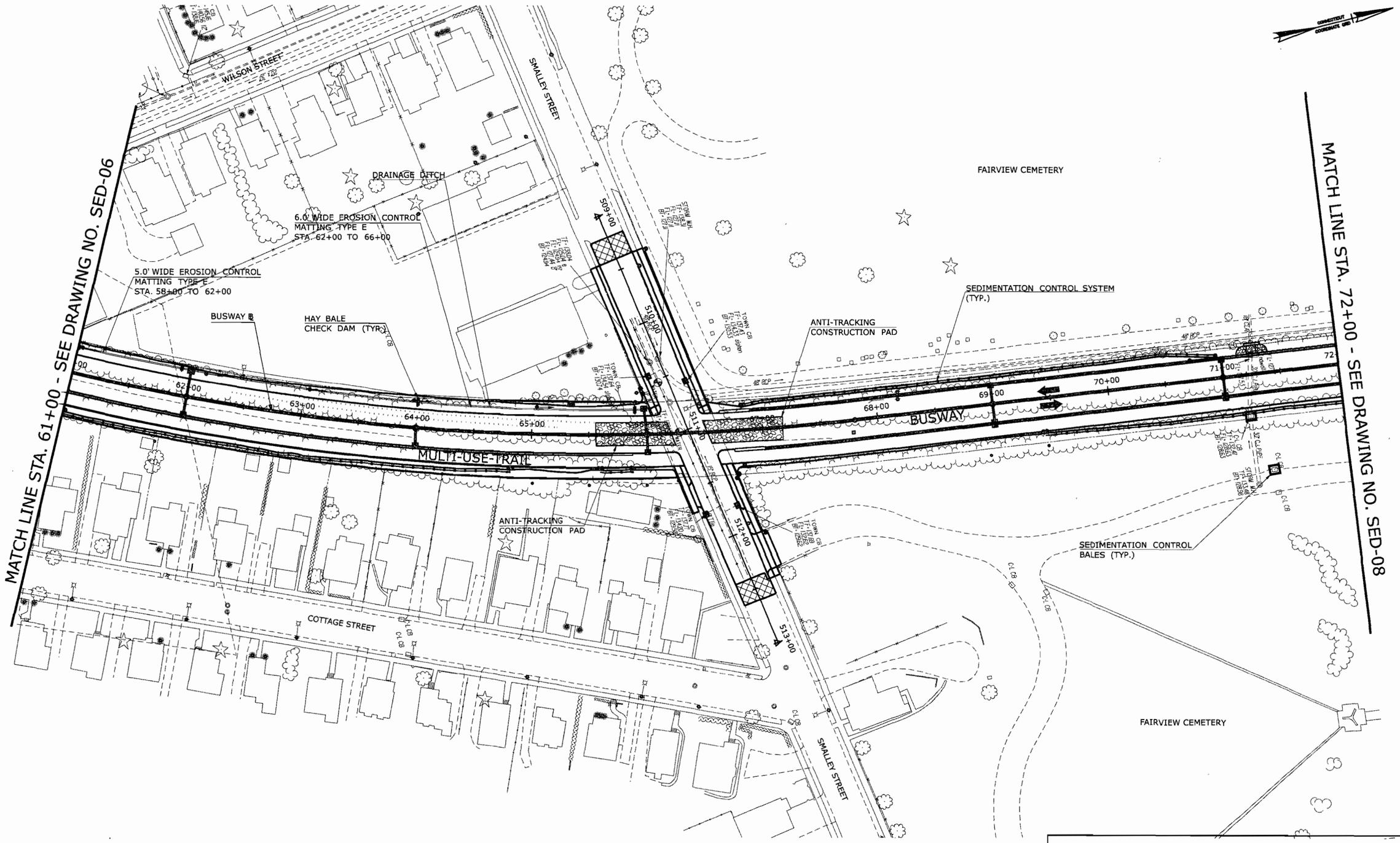

FINAL DESIGN REVIEW

REV.	DATE	REVISION DESCRIPTION	SHEET NO.
-	-	-	-
-	-	-	-
-	-	-	-
-	-	-	-
-	-	-	-
-	-	-	-

THE INFORMATION, INCLUDING ESTIMATED QUANTITIES OF WORK, SHOWN ON THESE SHEETS IS BASED ON LIMITED INVESTIGATIONS BY THE STATE AND IS IN NO WAY WARRANTED TO INDICATE THE CONDITIONS OF ACTUAL QUANTITIES OF WORK WHICH WILL BE REQUIRED.

Plotted: 7/28/2010

DESIGNER/DRAFTER: P. GILKEY
CHECKED BY: T. WALB
SCALE IN FEET 0 40 80
SCALE 1"=40'

STATE OF CONNECTICUT
DEPARTMENT OF TRANSPORTATION

Filename: P:\General\Outgoing\ConnDOT\2010_0727-DEP Permit\HW_MSH_088_H035_SED-07.dgn

SIGNATURE/BLOCK: URS CORPORATION AES
APPROVED BY: -
DATE: -

PROJECT TITLE: NEW BRITAIN - HARTFORD BUSWAY

TOWN: NEW BRITAIN

DRAWING TITLE: SEDIMENTATION CONTROL PLAN

PROJECT NO. 88-H035
DRAWING NO. SED-07
SHEET NO. S

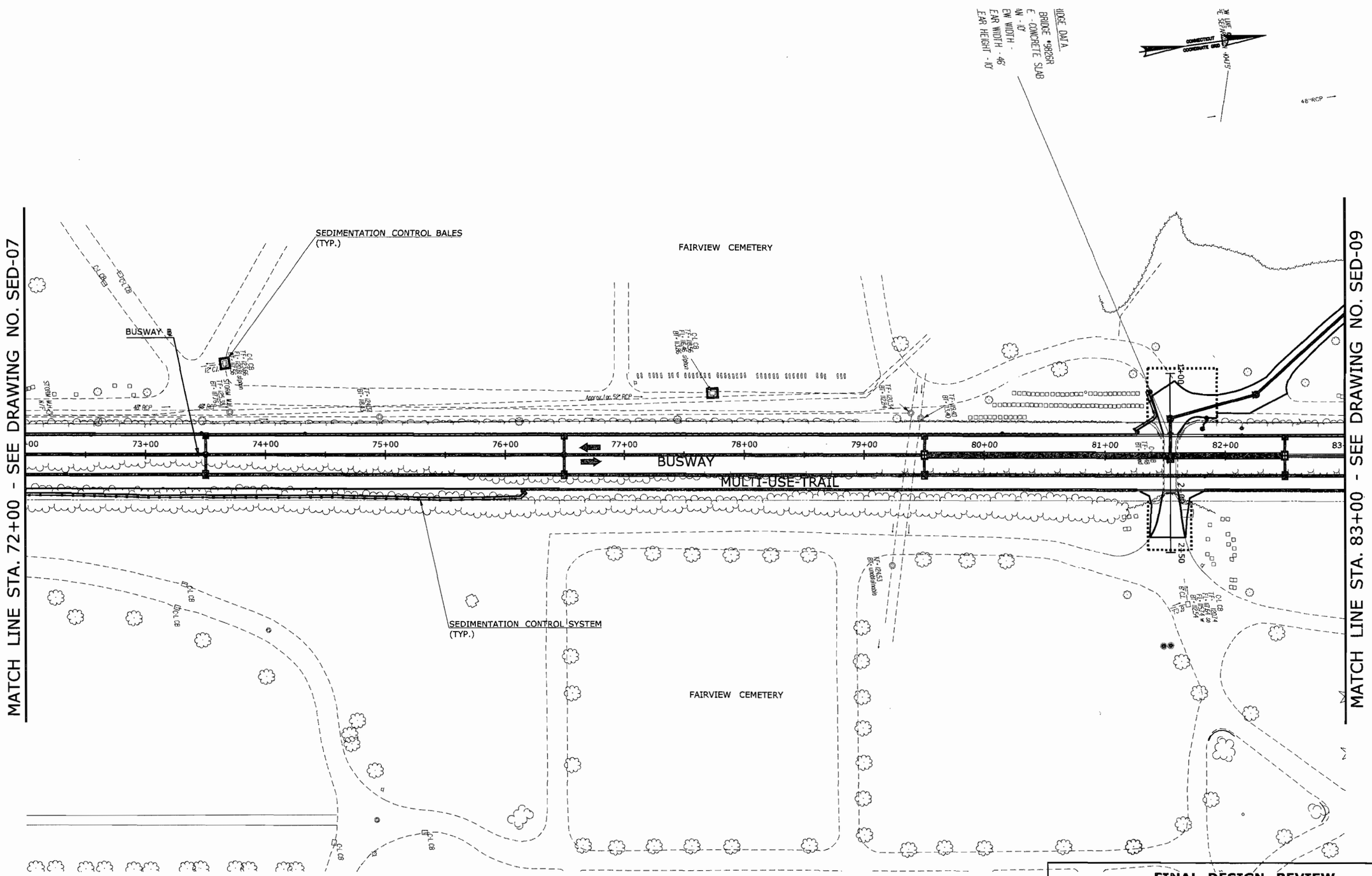

FINAL DESIGN REVIEW

REV.	DATE	REVISION DESCRIPTION	SHEET NO.
-	-	-	-
-	-	-	-
-	-	-	-
-	-	-	-
-	-	-	-
-	-	-	-

THE INFORMATION, INCLUDING ESTIMATED QUANTITIES OF WORK, SHOWN ON THESE SHEETS IS BASED ON LIMITED INVESTIGATIONS BY THE STATE AND IS IN NO WAY WARRANTED TO INDICATE THE CONDITIONS OF ACTUAL QUANTITIES OF WORK WHICH WILL BE REQUIRED.

Plotted: 7/28/2010

DESIGNER/DRAFTER: P. GILKEY
CHECKED BY: T. WALB
SCALE IN FEET 0 40 80
SCALE 1"=40'

STATE OF CONNECTICUT
DEPARTMENT OF TRANSPORTATION

Filename: P:\General\Outgoing\ConnDOT\2010_0727-DEP Permit\H-W_MSH_088_H035_SED-08.dgn

SIGNATURE/BLOCK: URS CORPORATION AES
APPROVED BY: -
DATE: -

PROJECT TITLE: NEW BRITAIN - HARTFORD BUSWAY

TOWN: NEW BRITAIN

DRAWING TITLE: SEDIMENTATION CONTROL PLAN

PROJECT NO. 88-H035
DRAWING NO. SED-08
SHEET NO. S

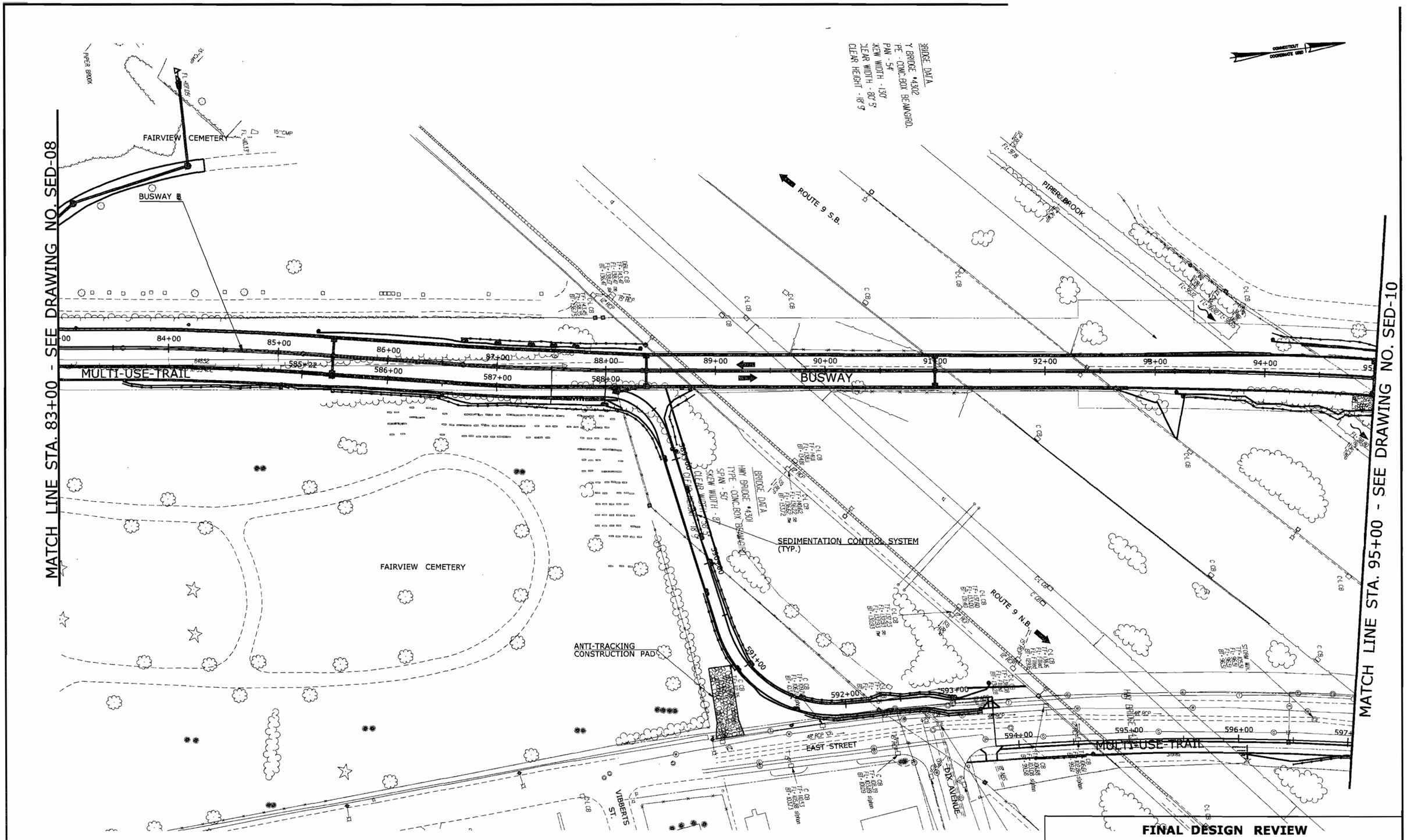

FINAL DESIGN REVIEW

REV.	DATE	REVISION DESCRIPTION	SHEET NO.
-	-	-	-
-	-	-	-
-	-	-	-
-	-	-	-
-	-	-	-
-	-	-	-

THE INFORMATION, INCLUDING ESTIMATED QUANTITIES OF WORK, SHOWN ON THESE SHEETS IS BASED ON LIMITED INVESTIGATIONS BY THE STATE AND IS IN NO WAY WARRANTED TO INDICATE THE CONDITIONS OF ACTUAL QUANTITIES OF WORK WHICH WILL BE REQUIRED.

Plotted: 7/28/2010

DESIGNER/DRAFTER: P. GILKEY
CHECKED BY: T. WALB
SCALE IN FEET
0 40 80
SCALE 1"=40'

STATE OF CONNECTICUT
DEPARTMENT OF TRANSPORTATION

Filename: P:\General\Outgoing\ConnDOT\2010_0727-DEP Permit\HW_MSH_088_H035_SED-09.dgn

SIGNATURE/ BLOCK: URS CORPORATION AES
APPROVED BY: -
DATE: -

PROJECT TITLE: NEW BRITAIN - HARTFORD BUSWAY

TOWN: NEW BRITAIN

DRAWING TITLE: SEDIMENTATION CONTROL PLAN

PROJECT NO. 88-H035
DRAWING NO. SED-09
SHEET NO. S

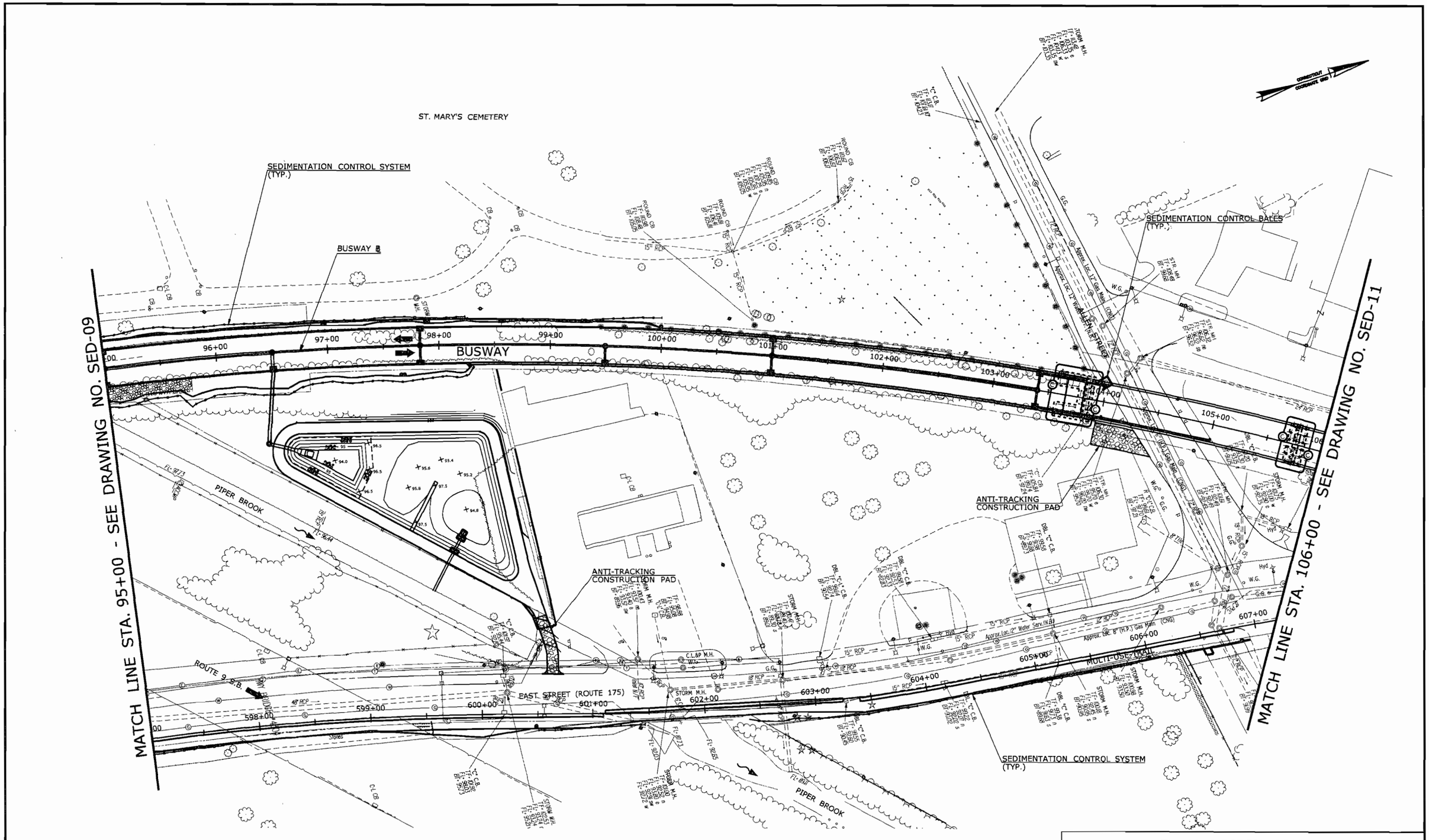

FINAL DESIGN REVIEW

REV.	DATE	REVISION DESCRIPTION	SHEET NO.
-	-	-	-
-	-	-	-
-	-	-	-
-	-	-	-
-	-	-	-
-	-	-	-

THE INFORMATION, INCLUDING ESTIMATED QUANTITIES OF WORK, SHOWN ON THESE SHEETS IS BASED ON LIMITED INVESTIGATIONS BY THE STATE AND IS IN NO WAY WARRANTED TO INDICATE THE CONDITIONS OF ACTUAL QUANTITIES OF WORK WHICH WILL BE REQUIRED.

Plotted: 7/28/2010

DESIGNER/DRAFTER: P. GILKEY
CHECKED BY: T. WALB
SCALE IN FEET 0 40 80
SCALE 1"=40'

STATE OF CONNECTICUT
DEPARTMENT OF TRANSPORTATION

Filename: P:\General\Outgoing\ConnDOT\2010_0727-DEP Permit\HW_MSH_088_H035_SED-10.dgn

SIGNATURE/BLOCK: URS CORPORATION AES
APPROVED BY: -
DATE: -

PROJECT TITLE: NEW BRITAIN - HARTFORD BUSWAY

TOWN: NEW BRITAIN

DRAWING TITLE: SEDIMENTATION CONTROL PLAN

PROJECT NO. 88-H035
DRAWING NO. SED-10
SHEET NO. S

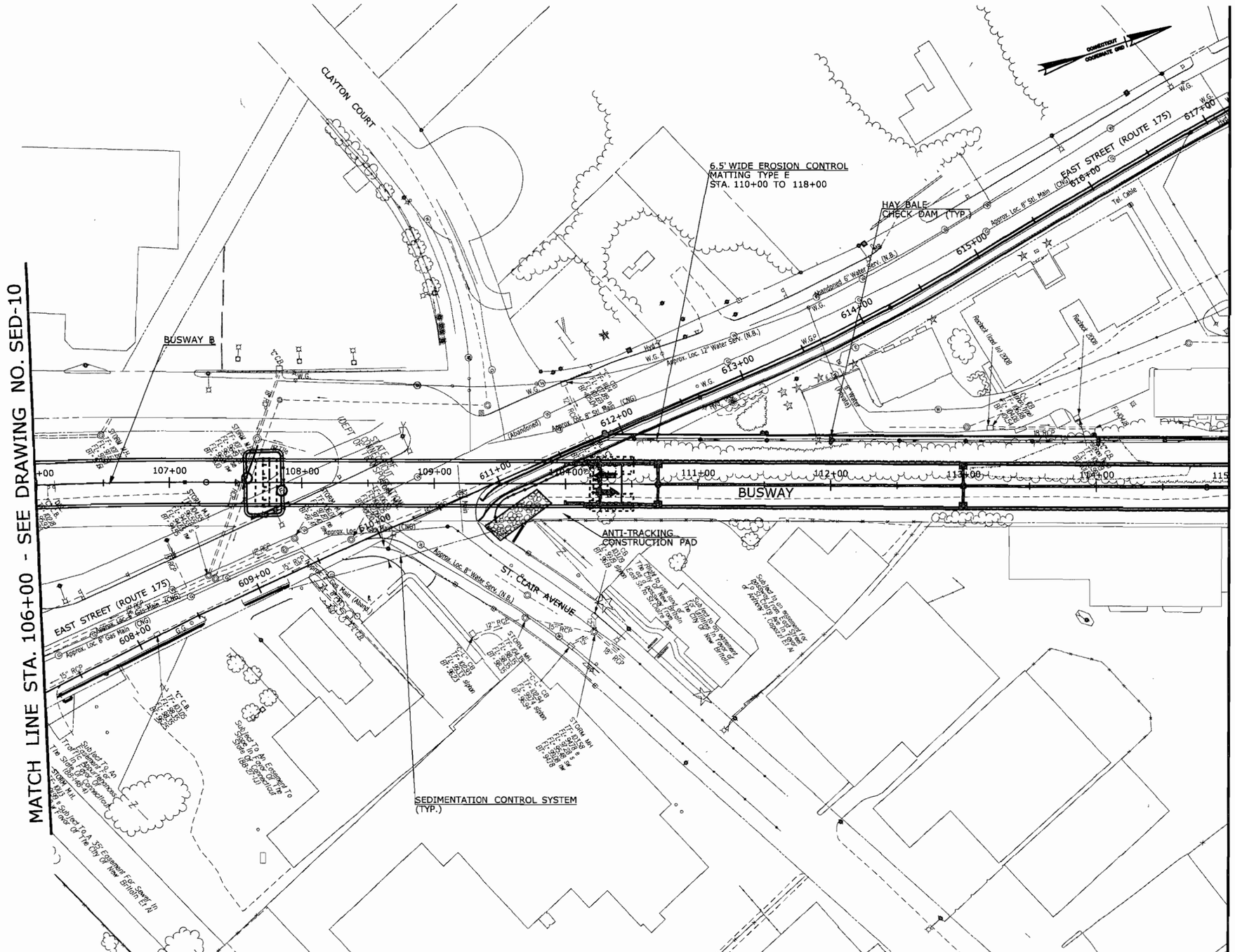

FINAL DESIGN REVIEW

REV.	DATE	REVISION DESCRIPTION	SHEET NO.
-	-	-	-
-	-	-	-
-	-	-	-
-	-	-	-
-	-	-	-
-	-	-	-
-	-	-	-

THE INFORMATION, INCLUDING ESTIMATED QUANTITIES OF WORK, SHOWN ON THESE SHEETS IS BASED ON LIMITED INVESTIGATIONS BY THE STATE AND IS IN NO WAY WARRANTED TO INDICATE THE CONDITIONS OF ACTUAL QUANTITIES OF WORK WHICH WILL BE REQUIRED.

Plotted: 7/28/2010

DESIGNER/DRAFTER: P. GILKEY
CHECKED BY: T. WALB
SCALE IN FEET 0 40 80
SCALE 1"=40'

STATE OF CONNECTICUT
DEPARTMENT OF TRANSPORTATION

Filename: P:\General\Outgoing\ConnDOT\2010_0727-DEP Permit\HW_MSH_088_H035_SED-11.dgn

SIGNATURE/BLOCK: URS CORPORATION AES
APPROVED BY: - DATE: -

PROJECT TITLE: NEW BRITAIN - HARTFORD BUSWAY

TOWN: NEW BRITAIN

DRAWING TITLE: SEDIMENTATION CONTROL PLAN

PROJECT NO. 88-H035
DRAWING NO. SED-11
SHEET NO. S

MATCH LINE STA. 106+00 - SEE DRAWING NO. SED-11

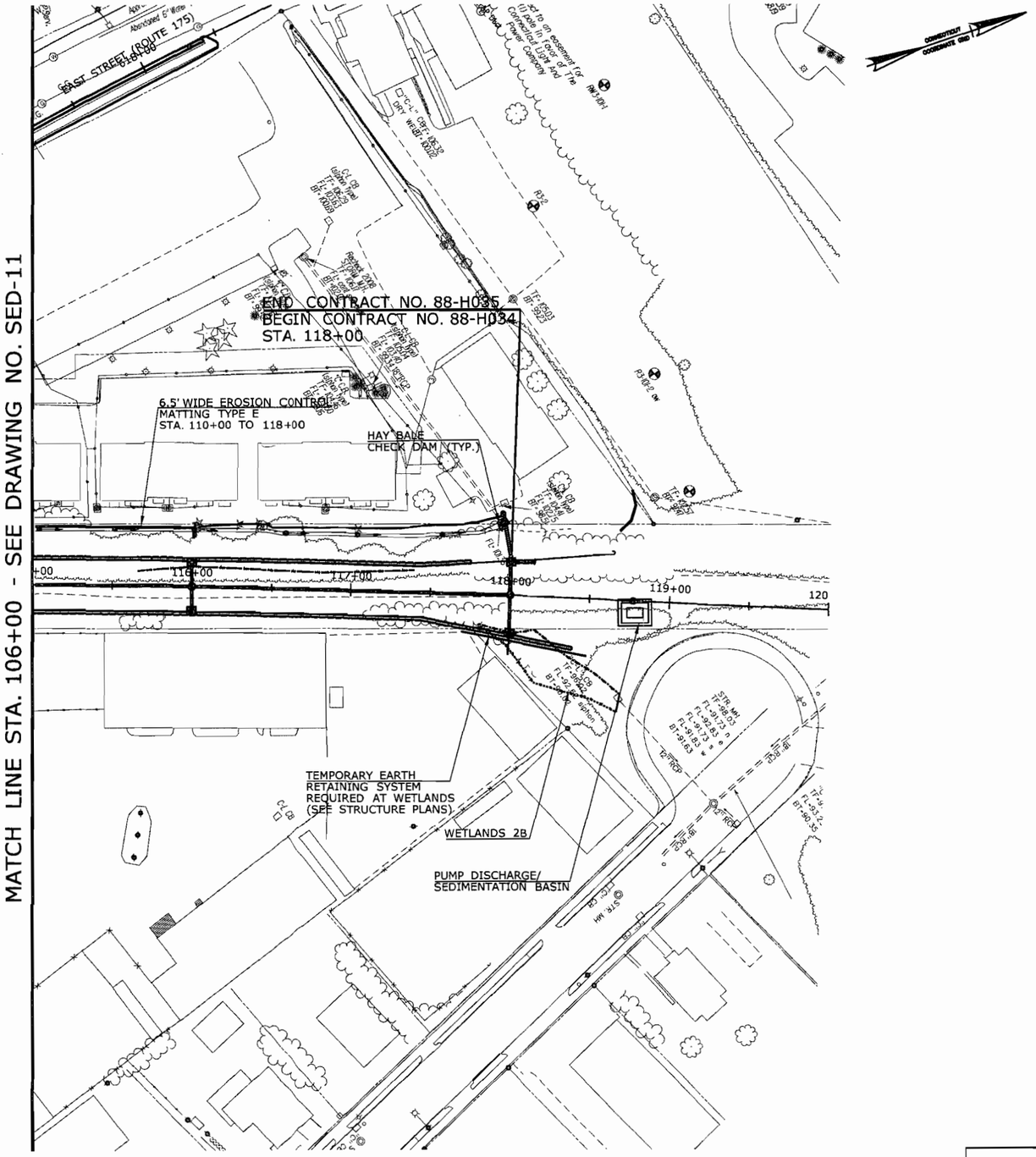

FINAL DESIGN REVIEW

REV.	DATE	REVISION DESCRIPTION	SHEET NO.
-	-	-	-
-	-	-	-
-	-	-	-
-	-	-	-
-	-	-	-
-	-	-	-

THE INFORMATION, INCLUDING ESTIMATED QUANTITIES OF WORK, SHOWN ON THESE SHEETS IS BASED ON LIMITED INVESTIGATIONS BY THE STATE AND IS IN NO WAY WARRANTED TO INDICATE THE CONDITIONS OF ACTUAL QUANTITIES OF WORK WHICH WILL BE REQUIRED.

Plotted: 7/28/2010

DESIGNER/DRAFTER: P. GILKEY
CHECKED BY: T. WALB
SCALE IN FEET 0 40 80
SCALE 1"=40'

STATE OF CONNECTICUT
DEPARTMENT OF TRANSPORTATION

Filename: P:\General\Outgoing\ConnDOT\2010_0727-DEP Permit\HW_MSH_088_H035_SED-12.dgn

SIGNATURE/ BLOCK: URS CORPORATION AES
APPROVED BY: -
DATE: -

PROJECT TITLE: NEW BRITAIN - HARTFORD BUSWAY

TOWN: NEW BRITAIN

DRAWING TITLE: SEDIMENTATION CONTROL PLAN

PROJECT NO. 88-H035
DRAWING NO. SED-12
SHEET NO. S

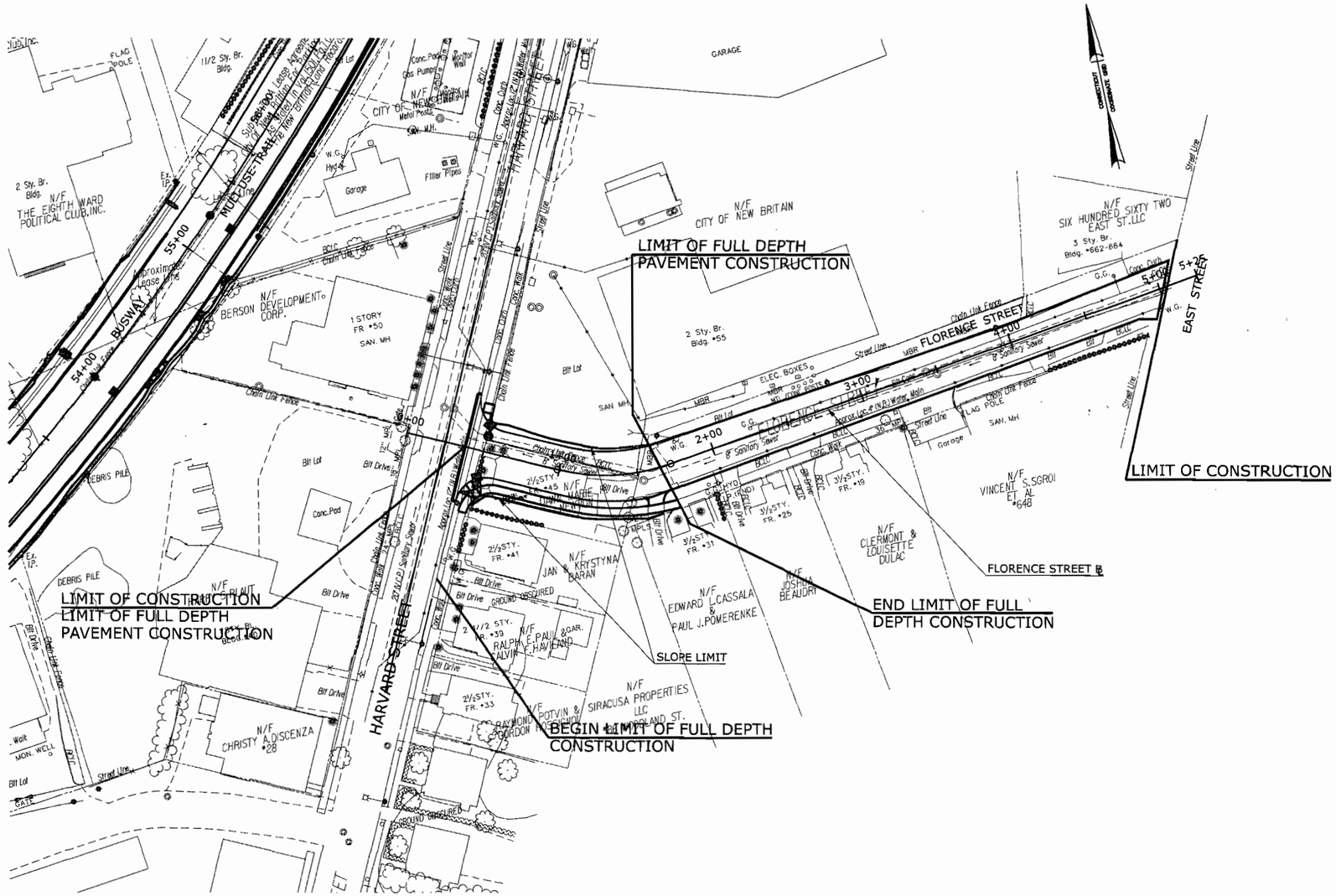

FINAL DESIGN REVIEW

REV.	DATE	REVISION DESCRIPTION	SHEET NO.
-	-	-	-
-	-	-	-
-	-	-	-
-	-	-	-
-	-	-	-
-	-	-	-

THE INFORMATION, INCLUDING ESTIMATED QUANTITIES OF WORK, SHOWN ON THESE SHEETS IS BASED ON LIMITED INVESTIGATIONS BY THE STATE AND IS IN NO WAY WARRANTED TO INDICATE THE CONDITIONS OF ACTUAL QUANTITIES OF WORK WHICH WILL BE REQUIRED.

Plotted: 7/28/2010

DESIGNER/DRAFTER: P. GILKEY
CHECKED BY: T. WALB
SCALE IN FEET 0 40 80
SCALE 1"=40'

STATE OF CONNECTICUT
DEPARTMENT OF TRANSPORTATION

Filename: P:\General\Outgoing\ConnDOT\2010.0727-DEP Permit\HW.MSH.088.H035.SED-13.dgn

SIGNATURE/BLOCK: URS CORPORATION AES
APPROVED BY: -
DATE: -

PROJECT TITLE: NEW BRITAIN - HARTFORD BUSWAY

TOWN: NEW BRITAIN

DRAWING TITLE: SEDIMENTATION CONTROL PLAN

PROJECT NO. 88-H035
DRAWING NO. SED-13
SHEET NO. S

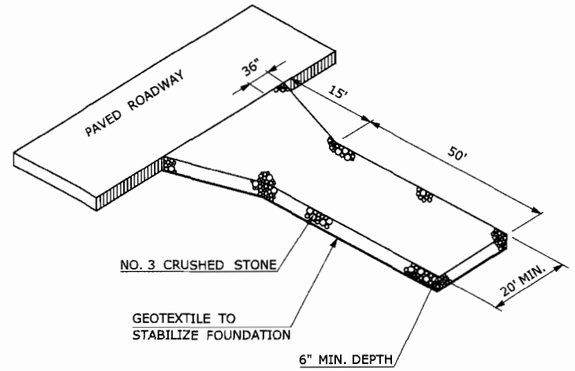

ANTI-TRACKING CONSTRUCTION PAD

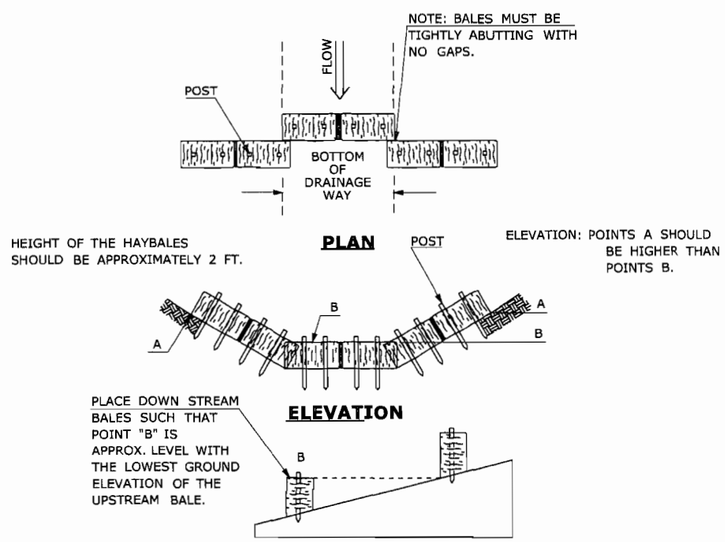

HAY BALE CHECK DAM FOR SEDIMENTATION CONTROL SYSTEM

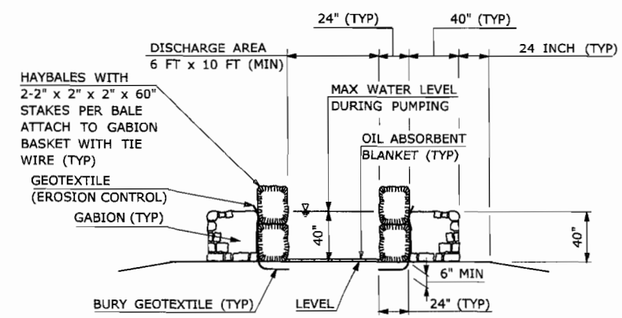

PUMP DISCHARGE / SEDIMENTATION BASIN DETAIL

NOTES:

1. AT THE COMPLETION OF THE WORK, THE GABIONS, GEOTEXTILE, OIL ABSORBENT BLANKET AND HAYBALES SHALL BE REMOVED FROM THE SITE, AND THE AREA SHALL BE RETURNED TO ITS ORIGINAL CONDITION BY THE CONTRACTOR AS DIRECTED BY THE ENGINEER.
2. FURNISHING, INSTALLING, MAINTAINING AND REMOVING THE PUMP DISCHARGE/SEDIMENTATION BASIN WILL NOT BE MEASURED FOR PAYMENT, BUT WILL BE INCLUDED UNDER THE LUMP SUM ITEM "HANDLING WATER".
3. ALL DIMENSIONS ARE IN INCHES EXCEPT AS NOTED.
4. DISCHARGE AREA SIZING TO BE DETERMINED BY THE CONTRACTOR.
5. CONTRACTOR TO DETERMINE FINAL SIZE BASED ON PUMP DISCHARGE RATE AND VOLUMES.

REV.	DATE	REVISION DESCRIPTION	SHEET NO.
-	-	-	-
-	-	-	-
-	-	-	-
-	-	-	-
-	-	-	-
-	-	-	-

THE INFORMATION, INCLUDING ESTIMATED QUANTITIES OF WORK, SHOWN ON THESE SHEETS IS BASED ON LIMITED INVESTIGATIONS BY THE STATE AND IS IN NO WAY WARRANTED TO INDICATE THE CONDITIONS OF ACTUAL QUANTITIES OF WORK WHICH WILL BE REQUIRED.

Plotted: 7/28/2010

DESIGNER/DRAFTER: P. GILKEY
CHECKED BY: T. WALB
NTS

STATE OF CONNECTICUT
DEPARTMENT OF TRANSPORTATION

Filename: P:\General\Outgoing\ConnDOT\2010_0727-DEP Permit\HW_MSH_088_H035_SED-14.dgn

SIGNATURE/BLOCK: URS CORPORATION AES
APPROVED BY: -
DATE: -

PROJECT TITLE: NEW BRITAIN - HARTFORD BUSWAY

TOWN: NEW BRITAIN

DRAWING TITLE: SEDIMENTATION CONTROL DETAILS

PROJECT NO. 88-H035
DRAWING NO. SED-14
SHEET NO. S

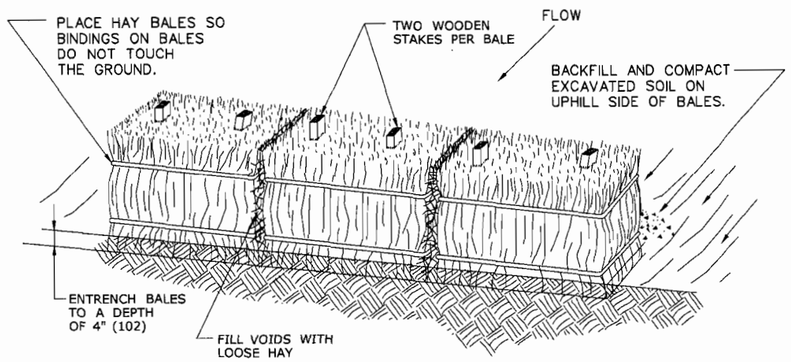

HAY BALE SYSTEM

GENERAL NOTES:

1. HAY BALES SHALL NOT BE USED IN A WATERCOURSE.
2. HAY BALES SHALL BE ENTRENCHED 4" (102) AND TIGHTLY BUTTED TOPGETHER. REMOVE HEAVY BRUSH AND FILL ALL VOIDS WITH LOOSE HAY.
3. WOOD STAKES SHALL HAVE A MINIMUM CROSS-SECTION SIZE OF AT LEAST 1" (102) x 1" (102) AND MINIMUM LENGTH OF 4 FT.(1219)
4. CLEAN OUT ACCUMULATED SEDIMENT WHEN ONE-HALF (1/2) OF THE ORIGINAL HEIGHT OF THE HAY BALE FENCE, AS INSTALLED, BECOMES FILLED WITH SEDIMENT OR AS DIRECTED BY THE ENGINEER.
5. NOT TO BE USED IN THE VICINITY OF URBAN AND RESIDENTIAL AREAS.

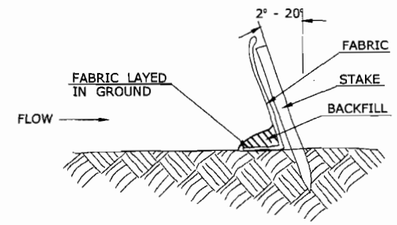

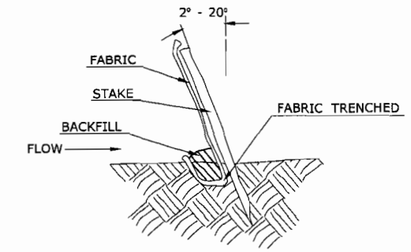

END VIEW

BACKFILLING GEOTEXTILE TOE

TRENCHING GEOTEXTILE TOE

GEOTEXTILE FENCE SYSTEM

GENERAL NOTES:

1. GEOTEXTILE FENCE SHOULD BE PLACED SO THE FENCE LEANS TOWARD THE SOURCE OF SEDIMENT.
2. MAXIMUM SPACING FOR WOODEN STAKES OR STEEL POSTS IS 10.0' (3048).
3. WOOD STAKES SHALL HAVE A MINIMUM CROSS-SECTION SIZE OF 1.5" (457) X 1.5" (457) AND MINIMUM LENGTH OF 4 FT. (1219) STEEL POSTS SHALL BE AT LEAST 0.5 LB. PER FOOT WITH A MINIMUM LENGTH OF 4 FT. (1219).
4. WOODEN STAKES OR STEEL POSTS SHALL BE DRIVEN TO A MINIMUM OF 1' (305) INTO THE GROUND.
5. 6" (152) OF GEOTEXTILE SHALL BE BURIED BY BACKFILLING OR TRENCHING AND AT LEAST 2.5' (762) IN HEIGHT OF GEOTEXTILE SHALL BE EXPOSED.
6. FABRIC SHALL BE JOINED ONLY AT A SUPPORT POST WITH A MINIMUM OF 6" (152) OVERLAP AND SECURITY SEALED.
7. UPON RE-ESTABLISHMENT OF GROUND COVER IN DISTURBED AREAS AND WHEN DIRECTED BY THE ENGINEER, OR UPON FINAL INSPECTION FENCE AND ANY SEDIMENT SHALL BE REMOVED. AT NO TIME WILL THE FENCE REMAIN IN PLACE AFTER PROJECT COMPLETION.
8. GEOTEXTILE FENCE SHALL NOT BE USED IN A WATER COARSE.
9. ONLY GEOTEXTILE FROM THE DEPARTMENTS APPROVED PRODUCT LIST SHALL BE USED.
10. BACKFILLING OF GEOTEXTILE SHALL ONLY BE USED WHEN GROUND IS FROZEN OR WHERE OTHER OBSTRUCTIONS ARE ENCOUNTERED THAT PROHIBITE TRENCHING, IE, STUMPS OR ROCKS.
11. CLEAN OUT ACCUMULATION SEDIMENT WHEN ONE-HALF (1/2) OF THE ORIGINAL HEIGHT OF THE GEOTEXTILE FENCE, AS INSTALLED , BECOMES FILLED WITH SEDIMENT OR AS DIRECTED BY THE ENGINEER.

REV.	DATE	REVISION DESCRIPTION	SHEET NO.
-	-	-	-
-	-	-	-
-	-	-	-
-	-	-	-
-	-	-	-
-	-	-	-

THE INFORMATION, INCLUDING ESTIMATED QUANTITIES OF WORK, SHOWN ON THESE SHEETS IS BASED ON LIMITED INVESTIGATIONS BY THE STATE AND IS IN NO WAY WARRANTED TO INDICATE THE CONDITIONS OF ACTUAL QUANTITIES OF WORK WHICH WILL BE REQUIRED.

Plotted: 7/28/2010

DESIGNER/DRAFTER: CTDOT
CHECKED BY: CTDOT
NTS

STATE OF CONNECTICUT
DEPARTMENT OF TRANSPORTATION

Filename: P:\General\Outgoing\ConnDOT\2010_0727-DEP Permit\I-W_MSH_088_H035_SED-15.dgn

SIGNATURE/ BLOCK:
OFFICE OF ENGINEERING
APPROVED BY: - DATE: -

PROJECT TITLE:
NEW BRITAIN - HARTFORD BUSWAY

TOWN: NEW BRITAIN
DRAWING TITLE: SEDIMENTATION CONTROL SYSTEM DETAILS

PROJECT NO. 88-H035
DRAWING NO. SED-15
SHEET NO. S

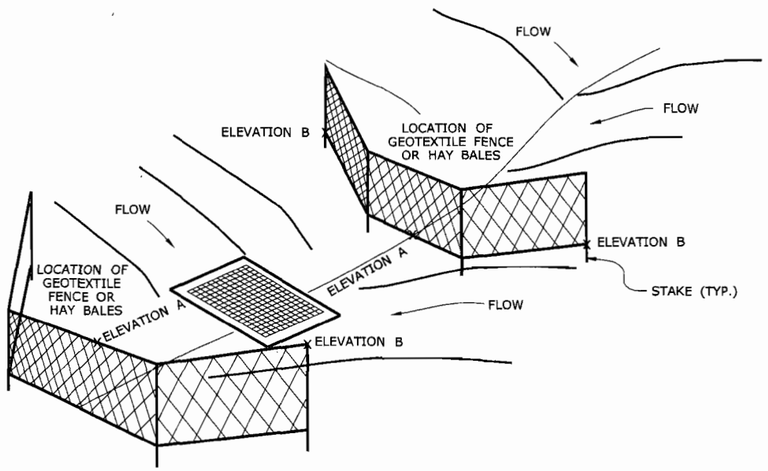

TREATMENT FOR A CATCH BASIN ON A SLOPE

(SEE NOTE 4)

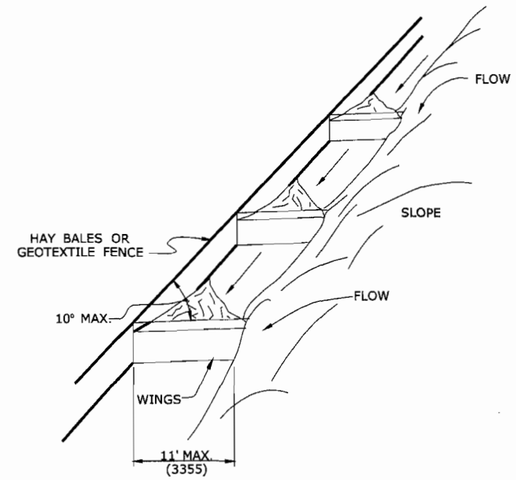

TREATMENT AT TOE OF SLOPE

(SEE NOTE 3)

GENERAL NOTES:

1. THE CONTRACTOR SHALL MAINTAIN THE EARTHEN BERM AS DIRECTED BY THE ENGINEER.
2. WHEN USING A SEDIMENTATION CONTROL SYSTEM ALONG THE TOE OF SLOPE, ADD WINGS TO PREVENT SEDIMENT FROM MOVING ALONG THE FENCE AND OFF THE SITE. MINIMUM SPACING FOR WINGS IS 25' (7620).
3. CATCH BASIN ON SLOPE SHOULD NOT BE RINGED. THE SPACING OF SEDIMENTATION CONTROL SYSTEM SHALL VARY WITH SLOPE.
4. ELEVATION B = A + 12" (305) MIN.

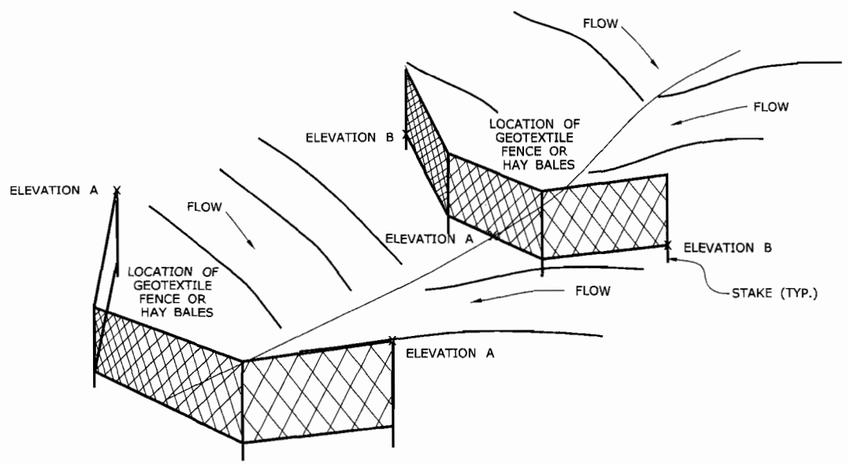

CHECK DAM

(SEE NOTE 4)

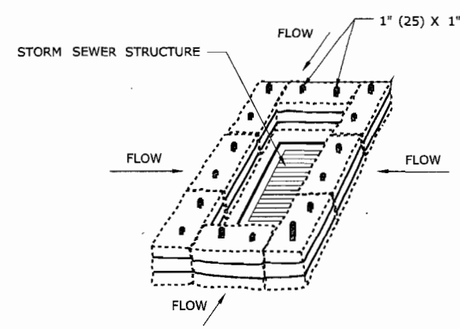

HAY BALE AT CATCH BASIN

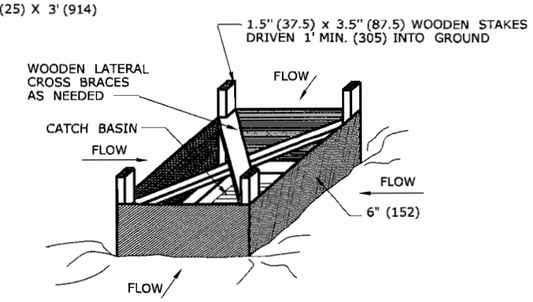

GEOTEXTILE FENCE AT CATCH BASIN

TREATMENT FOR A CATCH BASIN IN A DEPRESSION

REV.	DATE	REVISION DESCRIPTION	SHEET NO.
-	-	-	-
-	-	-	-
-	-	-	-
-	-	-	-
-	-	-	-
-	-	-	-
-	-	-	-

THE INFORMATION, INCLUDING ESTIMATED QUANTITIES OF WORK, SHOWN ON THESE SHEETS IS BASED ON LIMITED INVESTIGATIONS BY THE STATE AND IS IN NO WAY WARRANTED TO INDICATE THE CONDITIONS OF ACTUAL QUANTITIES OF WORK WHICH WILL BE REQUIRED.

Plotted: 7/28/2010

DESIGNER/DRAFTER: CTDOT
CHECKED BY: CTDOT
NTS

STATE OF CONNECTICUT
DEPARTMENT OF TRANSPORTATION

Filename: P:\General\Outgoing\ConnDOT\2010_0727-DEP Permit\HW_MSH_088_H035_SED-16.dgn

SIGNATURE/BLOCK: OFFICE OF ENGINEERING
APPROVED BY: -
DATE: -

PROJECT TITLE: NEW BRITAIN - HARTFORD BUSWAY

TOWN: NEW BRITAIN

DRAWING TITLE: SEDIMENTATION CONTROL TREATMENT DETAILS

PROJECT NO. 88-H035
DRAWING NO. SED-16
SHEET NO. S

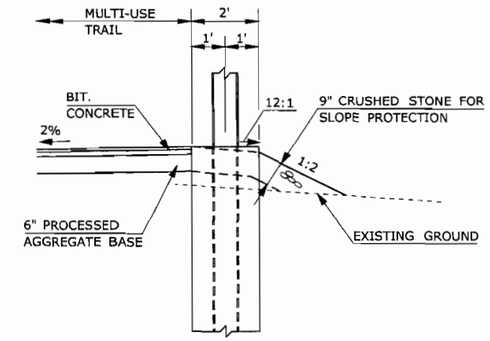

SLOPE PROTECTION DETAIL (MUT w/NOISE WALL)

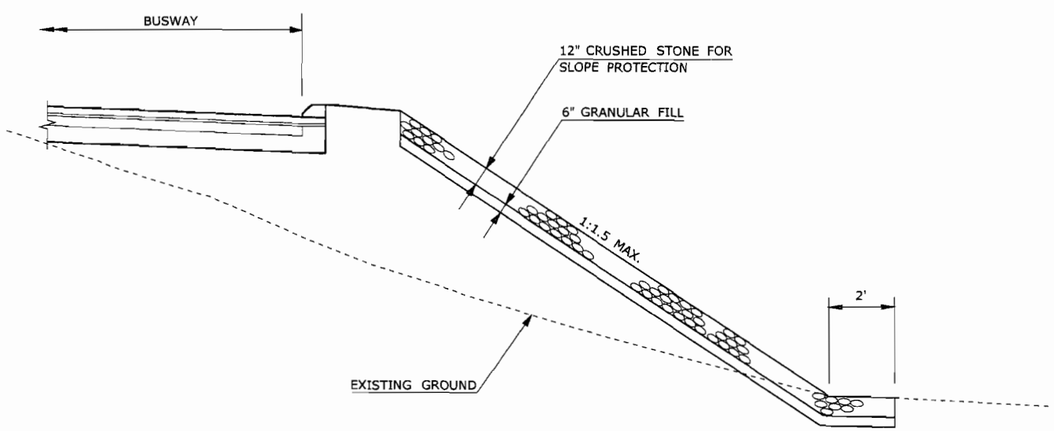

SLOPE PROTECTION DETAIL (FILL)

BUSWAY STA. 94+80 TO STA.95+75

FINAL DESIGN REVIEW

REV.	DATE	REVISION DESCRIPTION	SHEET NO.
-	-	-	-
-	-	-	-
-	-	-	-
-	-	-	-
-	-	-	-
-	-	-	-

THE INFORMATION, INCLUDING ESTIMATED QUANTITIES OF WORK, SHOWN ON THESE SHEETS IS BASED ON LIMITED INVESTIGATIONS BY THE STATE AND IS IN NO WAY WARRANTED TO INDICATE THE CONDITIONS OF ACTUAL QUANTITIES OF WORK WHICH WILL BE REQUIRED.

Plotted: 7/28/2010

DESIGNER/DRAFTER: P. GILKEY
CHECKED BY: T. WALB
NTS

STATE OF CONNECTICUT
DEPARTMENT OF TRANSPORTATION

Filename: P:\General\Outgoing\ConnDOT\2010_0727-DEP Permit\HW_MSH_088_H035_SED-17.dgn

SIGNATURE/ BLOCK: URS CORPORATION AES
APPROVED BY: -
DATE: -

PROJECT TITLE: NEW BRITAIN - HARTFORD BUSWAY

TOWN: NEW BRITAIN

DRAWING TITLE: SLOPE PROTECTION

PROJECT NO. 88-H035
DRAWING NO. SED-17
SHEET NO. S

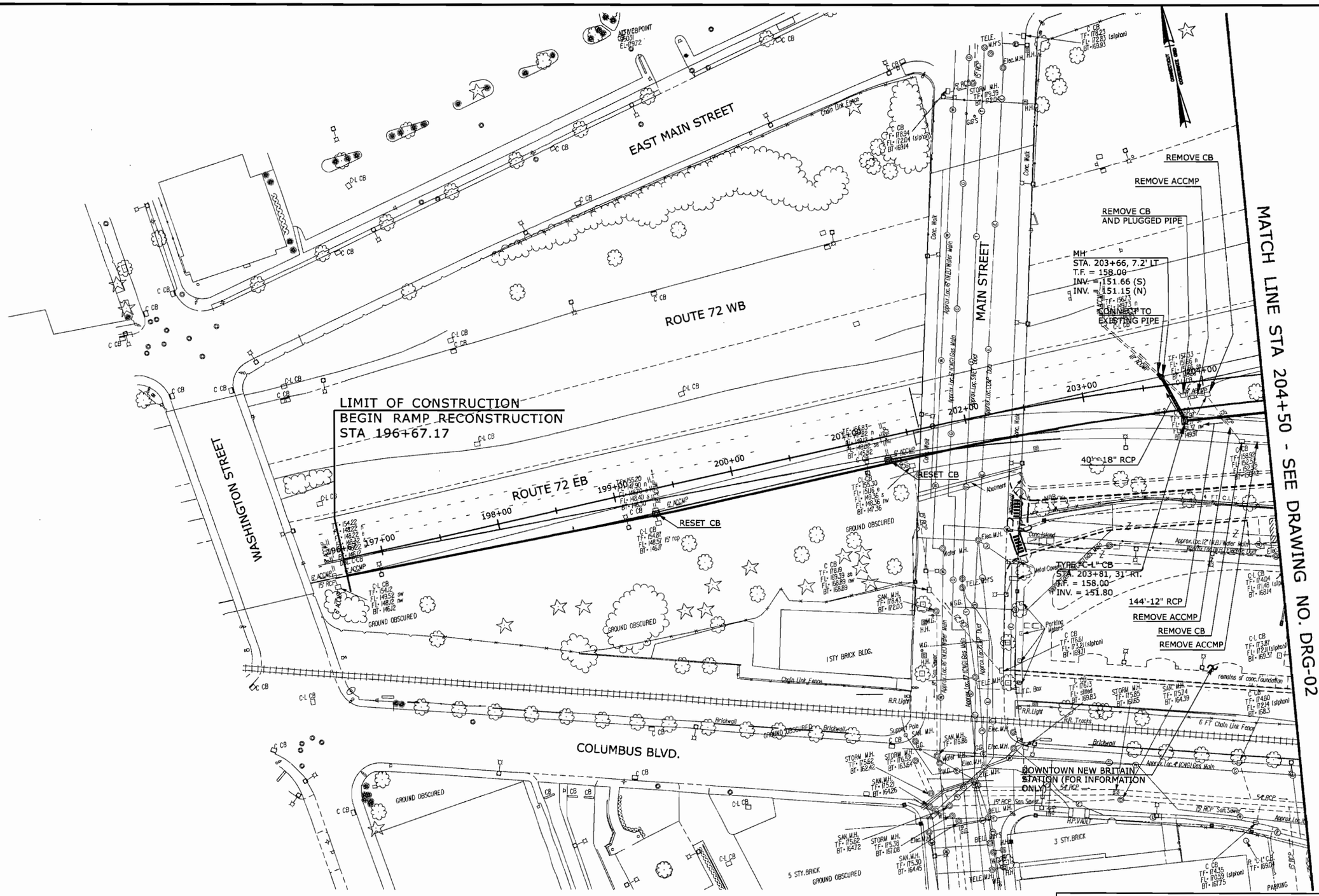

FINAL DESIGN REVIEW

REV.	DATE	REVISION DESCRIPTION	SHEET NO.
-	-	-	-
-	-	-	-
-	-	-	-
-	-	-	-
-	-	-	-
-	-	-	-
-	-	-	-

THE INFORMATION, INCLUDING ESTIMATED QUANTITIES OF WORK, SHOWN ON THESE SHEETS IS BASED ON LIMITED INVESTIGATIONS BY THE STATE AND IS IN NO WAY WARRANTED TO INDICATE THE CONDITIONS OF ACTUAL QUANTITIES OF WORK WHICH WILL BE REQUIRED.

Plotted: 7/28/2010

DESIGNER/DRAFTER: D. SHI

CHECKED BY: B. KONUK

SCALE IN FEET 0 40 80

SCALE 1"=40'

STATE OF CONNECTICUT
DEPARTMENT OF TRANSPORTATION

Filename: P:\General\Outgoing\ConnDOT\2010_0727-DEP Permit\HW_MSH_088_H035_DRG01.dgn

SIGNATURE/BLOCK: **URS CORPORATION AES**

APPROVED BY: DATE: -

PROJECT TITLE: **NEW BRITAIN - HARTFORD BUSWAY**

TOWN: **NEW BRITAIN**

DRAWING TITLE: **DRAINAGE PLAN**

PROJECT NO. **88-H035**

DRAWING NO. **DRG-01**

SHEET NO. **S**

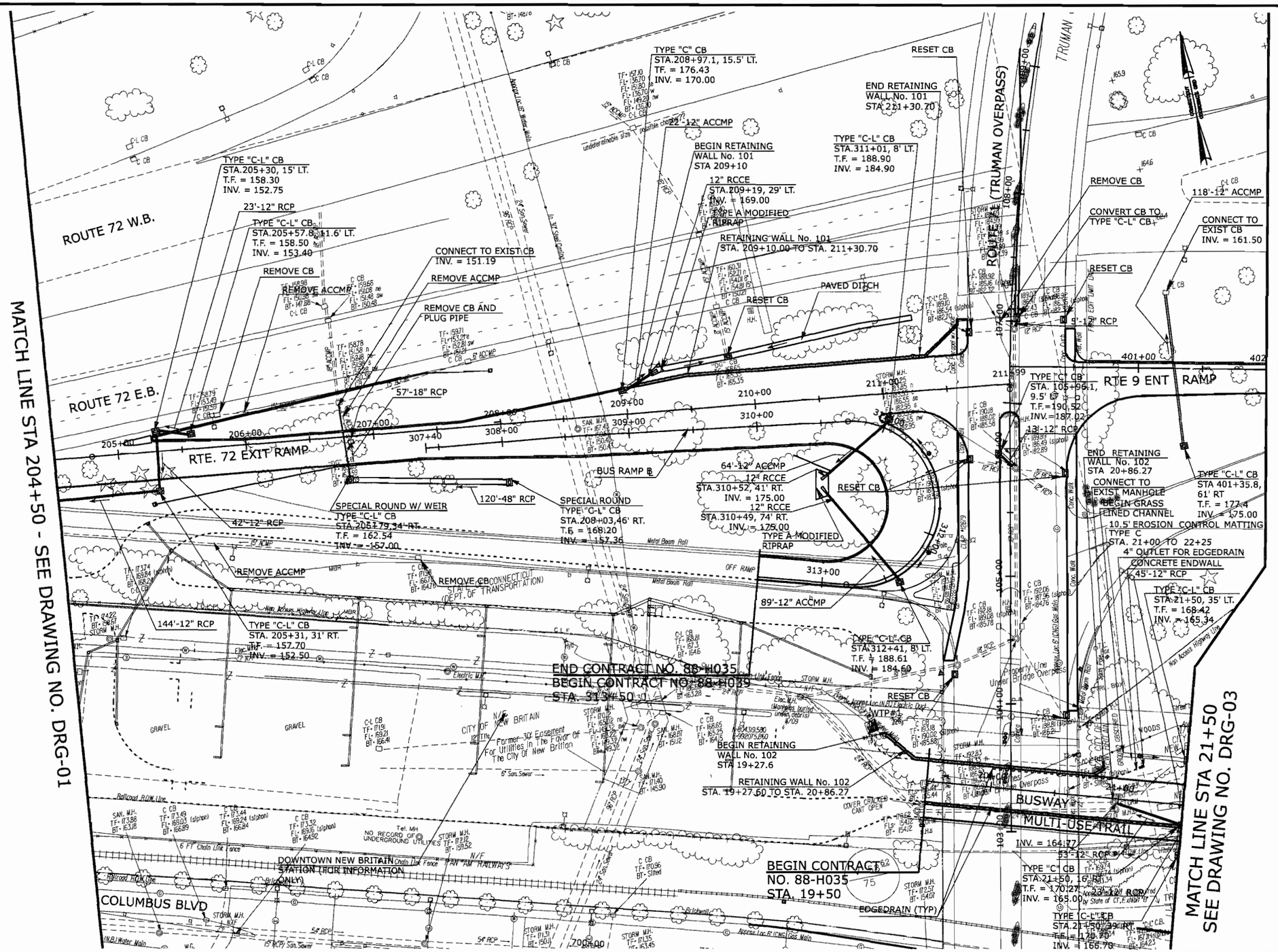

FINAL DESIGN REVIEW

REV.	DATE	REVISION DESCRIPTION	SHEET NO.
-	-	-	-
-	-	-	-
-	-	-	-
-	-	-	-
-	-	-	-
-	-	-	-
-	-	-	-

Plotted: 7/28/2010

THE INFORMATION, INCLUDING ESTIMATED QUANTITIES OF WORK, SHOWN ON THESE SHEETS IS BASED ON LIMITED INVESTIGATIONS BY THE STATE AND IS IN NO WAY WARRANTED TO INDICATE THE CONDITIONS OF ACTUAL QUANTITIES OF WORK WHICH WILL BE REQUIRED.

DESIGNER/DRAFTER: D. SHI
CHECKED BY: B. KONUK
SCALE IN FEET 0 40 80
SCALE 1"=40'

STATE OF CONNECTICUT
DEPARTMENT OF TRANSPORTATION

Filename: P:\General\Outgoing\ConnDOT\2010_0727-DEP Permit\HW_MSH_088_H035_DRG-02.dgn

SIGNATURE/BLOCK: URS CORPORATION AES
APPROVED BY: -
DATE: -

PROJECT TITLE: NEW BRITAIN - HARTFORD BUSWAY

TOWN: NEW BRITAIN
DRAWING TITLE: DRAINAGE PLAN

PROJECT NO. 88-H035
DRAWING NO. DRG-02
SHEET NO. S

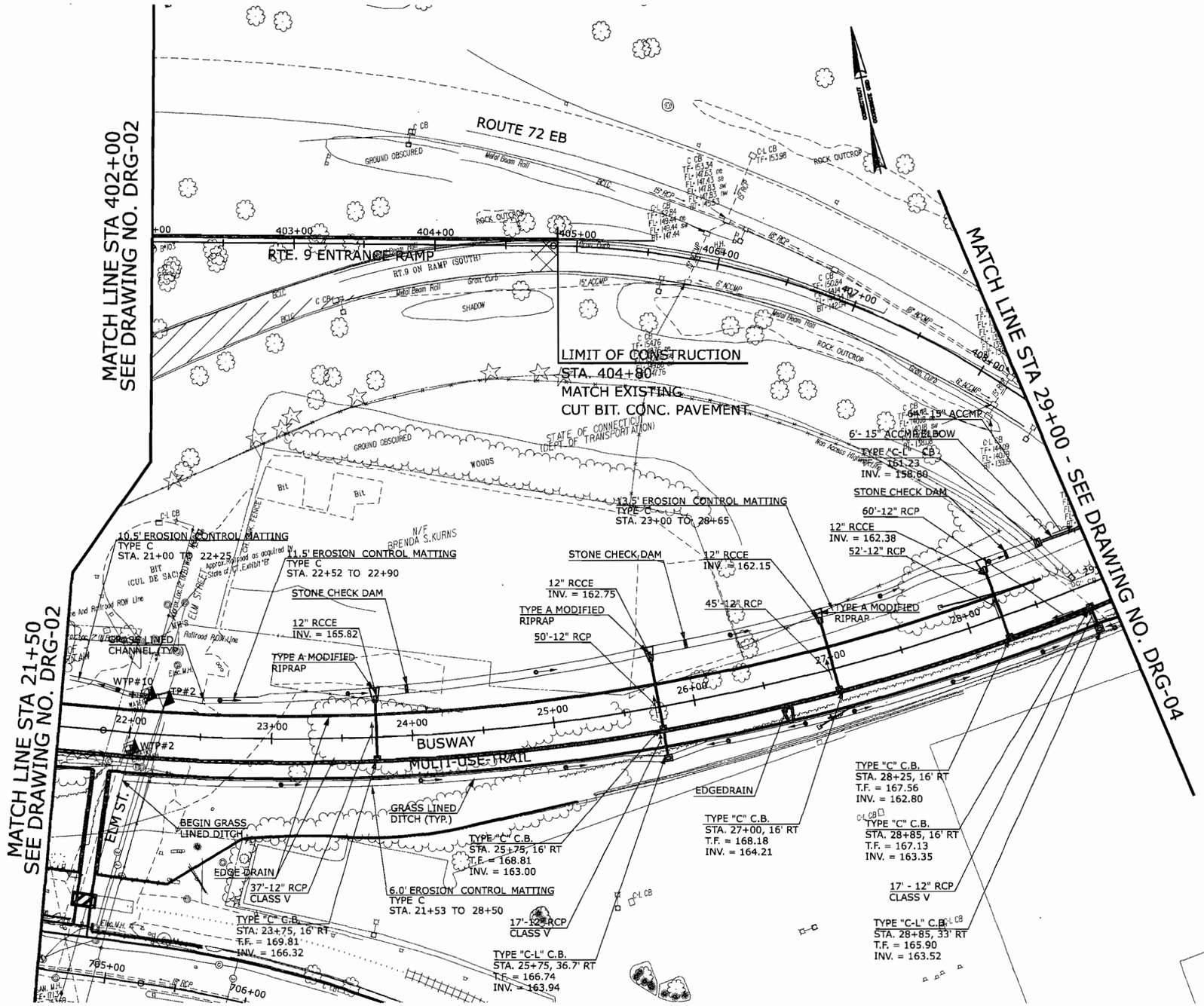

FINAL DESIGN REVIEW

REV.	DATE	REVISION DESCRIPTION	SHEET NO.
-	-	-	-
-	-	-	-
-	-	-	-
-	-	-	-
-	-	-	-
-	-	-	-

THE INFORMATION, INCLUDING ESTIMATED QUANTITIES OF WORK, SHOWN ON THESE SHEETS IS BASED ON LIMITED INVESTIGATIONS BY THE STATE AND IS IN NO WAY WARRANTED TO INDICATE THE CONDITIONS OF ACTUAL QUANTITIES OF WORK WHICH WILL BE REQUIRED.

Plotted: 7/28/2010

DESIGNER/DRAFTER: D. SHI
CHECKED BY: B. KONUK
SCALE IN FEET 0 40 80
SCALE 1"=40'

STATE OF CONNECTICUT
DEPARTMENT OF TRANSPORTATION

Filename: P:\General\Outgoing\ConnDOT\2010_0727-DEP Permit\HW_MSH_088_H035_DRG-03.dgn

SIGNATURE/BLOCK: URS CORPORATION AES
APPROVED BY: -
DATE: -

PROJECT TITLE: NEW BRITAIN - HARTFORD BUSWAY

TOWN: NEW BRITAIN
DRAWING TITLE: DRAINAGE PLAN

PROJECT NO. 88-H035
DRAWING NO. DRG-03
SHEET NO. S

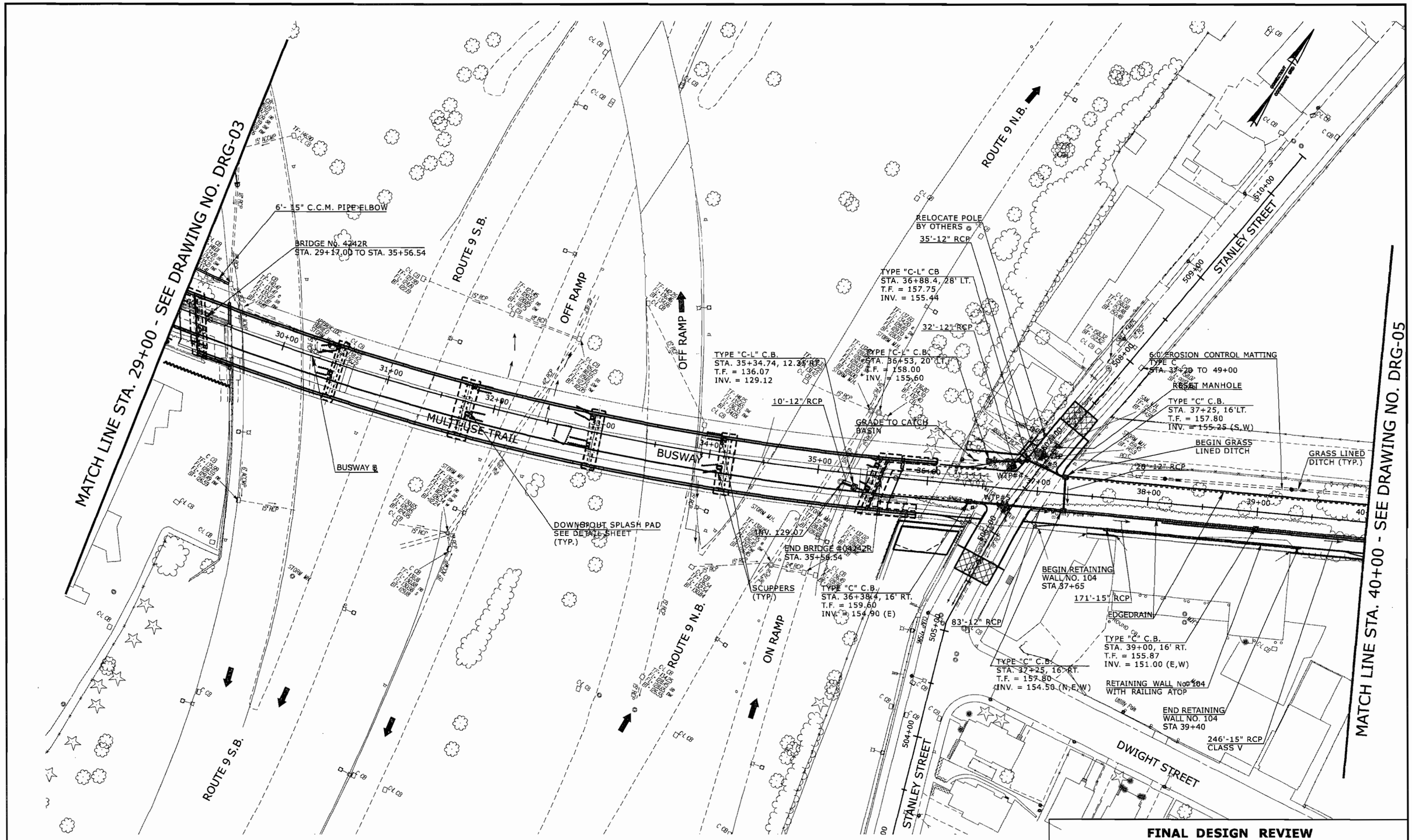

FINAL DESIGN REVIEW

REV.	DATE	REVISION DESCRIPTION	SHEET NO.
-	-	-	-
-	-	-	-
-	-	-	-
-	-	-	-
-	-	-	-
-	-	-	-

THE INFORMATION, INCLUDING ESTIMATED QUANTITIES OF WORK, SHOWN ON THESE SHEETS IS BASED ON LIMITED INVESTIGATIONS BY THE STATE AND IS IN NO WAY WARRANTED TO INDICATE THE CONDITIONS OF ACTUAL QUANTITIES OF WORK WHICH WILL BE REQUIRED.

Plotted: 7/28/2010

DESIGNER/DRAFTER: D. SHI
CHECKED BY: B. KONUK
SCALE IN FEET 0 40 80
SCALE 1"=40'

STATE OF CONNECTICUT
DEPARTMENT OF TRANSPORTATION

Filename: P:\General\Outgoing\ConnDOT\2010_0727-DEP Permit\HW_MSH_088_H035_DRG04.dgn

SIGNATURE/BLOCK: URS CORPORATION AES
APPROVED BY: -
DATE: -

PROJECT TITLE: NEW BRITAIN - HARTFORD BUSWAY

TOWN: NEW BRITAIN

DRAWING TITLE: DRAINAGE PLAN

PROJECT NO. 88-H035
DRAWING NO. DRG-04
SHEET NO. S

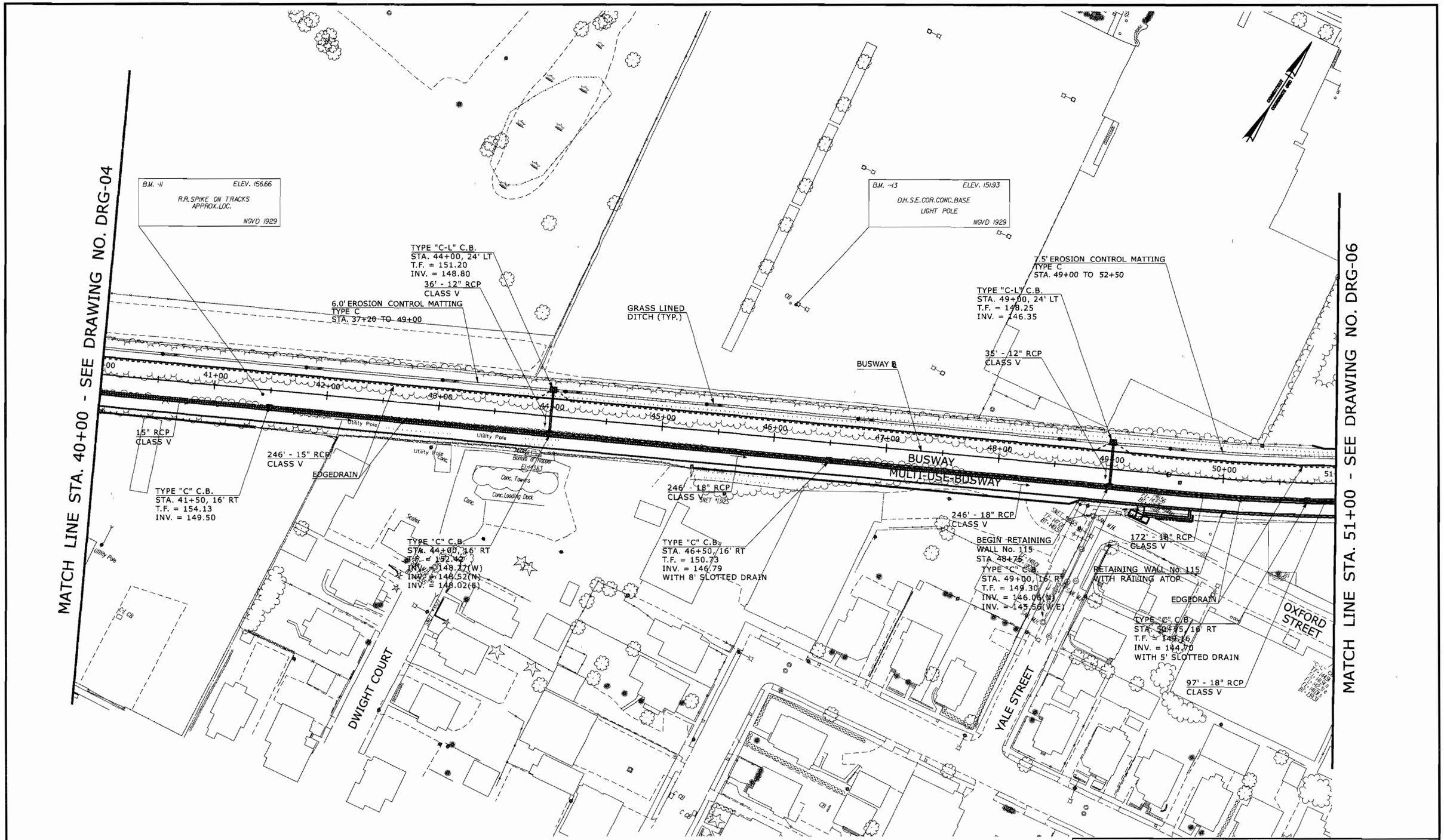

FINAL DESIGN REVIEW

REV.	DATE	REVISION DESCRIPTION	SHEET NO.
-	-	-	-
-	-	-	-
-	-	-	-
-	-	-	-
-	-	-	-
-	-	-	-

THE INFORMATION, INCLUDING ESTIMATED QUANTITIES OF WORK, SHOWN ON THESE SHEETS IS BASED ON LIMITED INVESTIGATIONS BY THE STATE AND IS IN NO WAY WARRANTED TO INDICATE THE CONDITIONS OF ACTUAL QUANTITIES OF WORK WHICH WILL BE REQUIRED.

Plotted: 7/28/2010

DESIGNER/DRAFTER: D. SHI
CHECKED BY: B. KONUK
SCALE IN FEET
0 40 80
SCALE 1"=40'

STATE OF CONNECTICUT
DEPARTMENT OF TRANSPORTATION

Filename: P:\General\Outgoing\ConnDOT\2010_0727-DEP Permit\HW_MSH_088_H035_DRG05.dgn

SIGNATURE/BLOCK: URS CORPORATION AES
APPROVED BY: -
DATE: -

PROJECT TITLE: NEW BRITAIN - HARTFORD BUSWAY

TOWN: NEW BRITAIN

DRAWING TITLE: DRAINAGE PLAN

PROJECT NO. 88-H035
DRAWING NO. DRG-05
SHEET NO. S

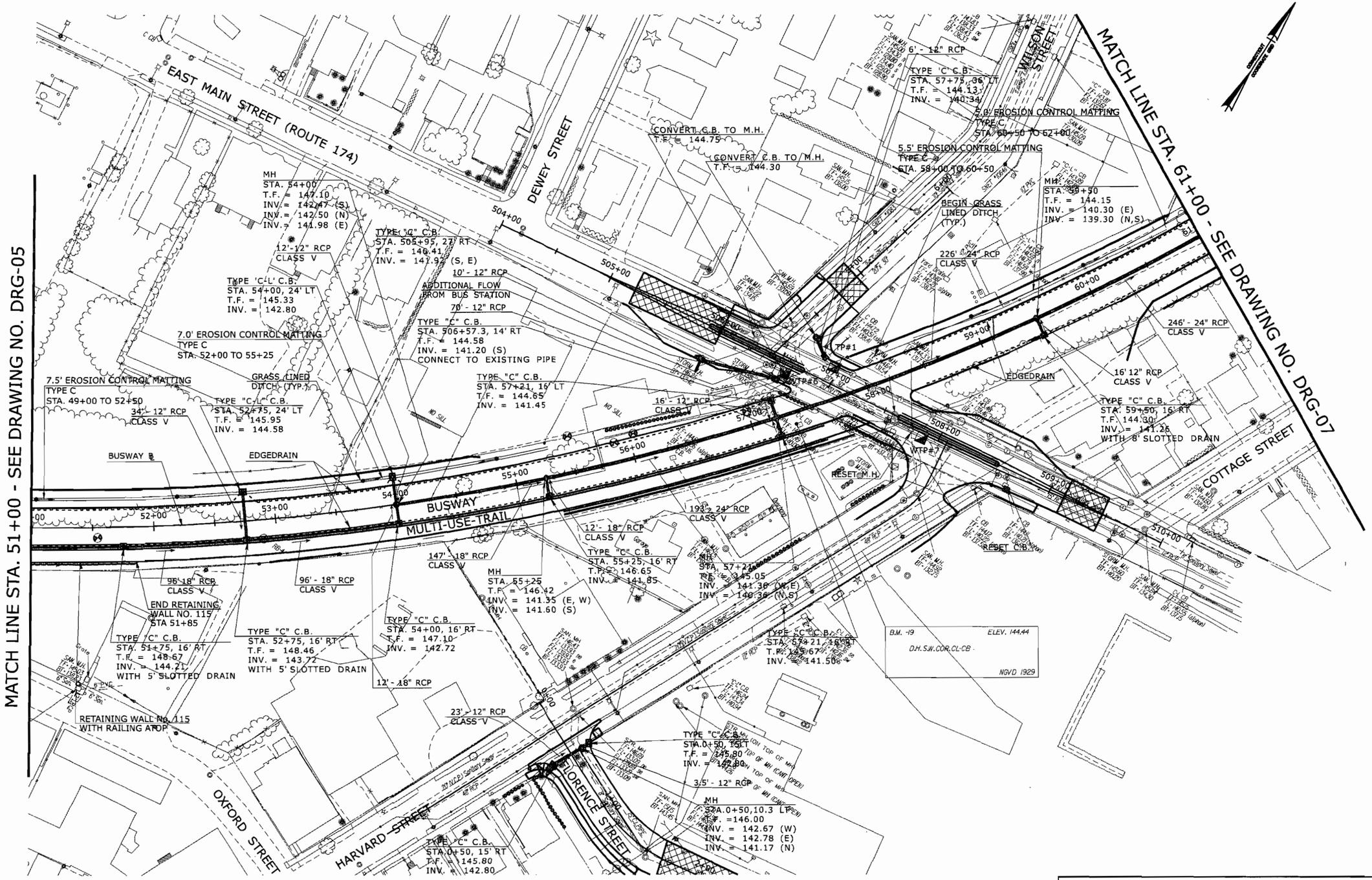

FINAL DESIGN REVIEW

REV.	DATE	REVISION DESCRIPTION	SHEET NO.
-	-	-	-
-	-	-	-
-	-	-	-
-	-	-	-
-	-	-	-
-	-	-	-

THE INFORMATION, INCLUDING ESTIMATED QUANTITIES OF WORK, SHOWN ON THESE SHEETS IS BASED ON LIMITED INVESTIGATIONS BY THE STATE AND IS IN NO WAY WARRANTED TO INDICATE THE CONDITIONS OF ACTUAL QUANTITIES OF WORK WHICH WILL BE REQUIRED.

Plotted: 7/28/2010

DESIGNER/DRAFTER: D.SHI
CHECKED BY: B. KONUK
SCALE IN FEET 0 40 80
SCALE 1"=40'

STATE OF CONNECTICUT
DEPARTMENT OF TRANSPORTATION

Filename: P:\General\Outgoing\ConnDOT\2010.0727-DEP Permit\H-W.MSH.088.H035.DRG06.dgn

SIGNATURE/BLOCK: URS CORPORATION AES
APPROVED BY: DATE:

PROJECT TITLE: NEW BRITAIN - HARTFORD BUSWAY

TOWN: NEW BRITAIN
DRAWING TITLE: DRAINAGE PLAN

PROJECT NO. 88-H035
DRAWING NO. DRG-06
SHEET NO. S

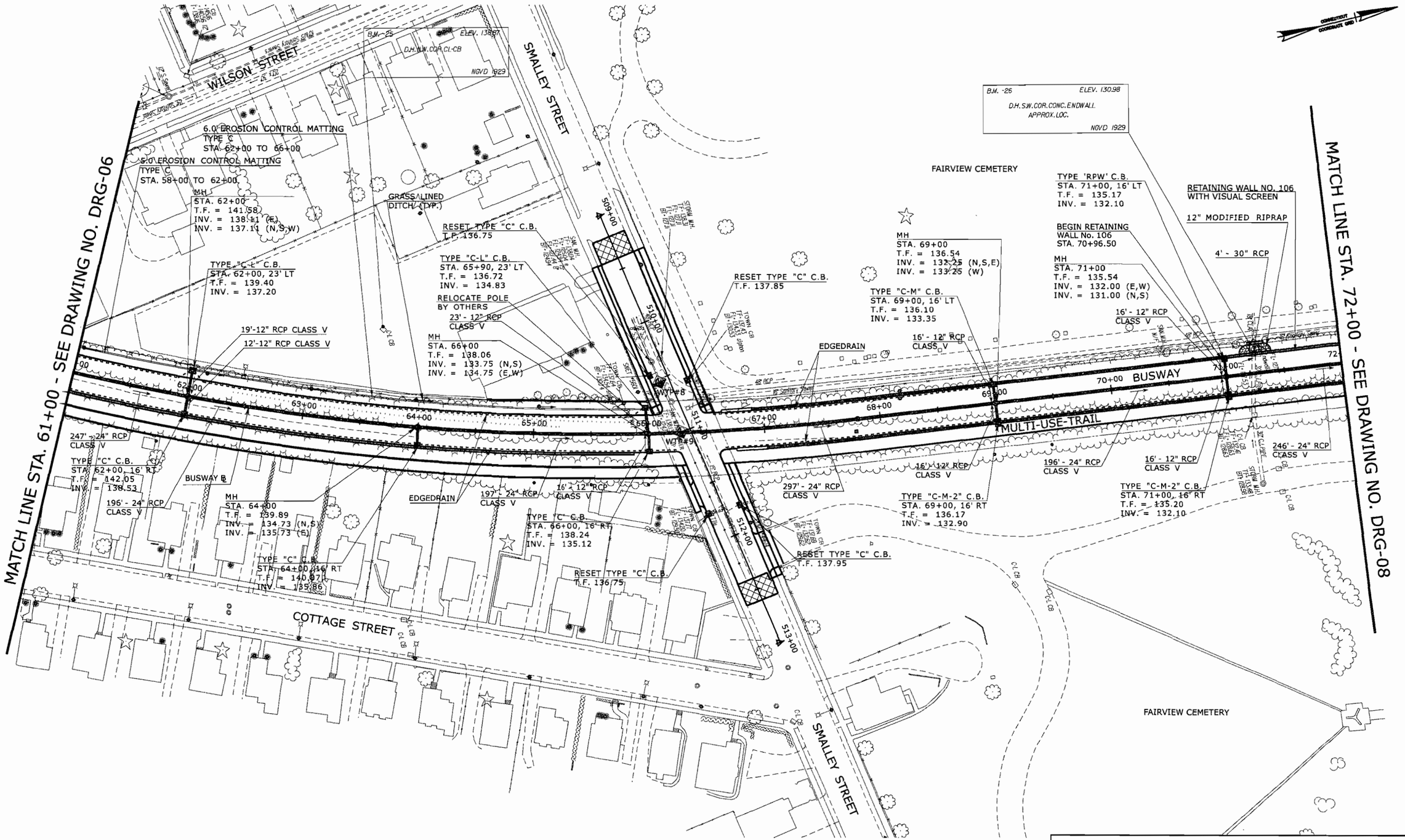

FINAL DESIGN REVIEW

REV.	DATE	REVISION DESCRIPTION	SHEET NO.
-	-	-	-
-	-	-	-
-	-	-	-
-	-	-	-
-	-	-	-
-	-	-	-
-	-	-	-

THE INFORMATION, INCLUDING ESTIMATED QUANTITIES OF WORK, SHOWN ON THESE SHEETS IS BASED ON LIMITED INVESTIGATIONS BY THE STATE AND IS IN NO WAY WARRANTED TO INDICATE THE CONDITIONS OF ACTUAL QUANTITIES OF WORK WHICH WILL BE REQUIRED.

Plotted: 7/28/2010

DESIGNER/DRAFTER: D. SHI
CHECKED BY: B. KONUK
SCALE IN FEET
0 40 80
SCALE 1"=40'

STATE OF CONNECTICUT
DEPARTMENT OF TRANSPORTATION

Filename: P:\General\Outgoing\ConnDOT\2010_0727-DEP Permit\HW_MSH_088_H035_DRG07.dgn

SIGNATURE/BLOCK: **URS CORPORATION AES**
APPROVED BY: -
DATE: -

PROJECT TITLE: **NEW BRITAIN - HARTFORD BUSWAY**

TOWN: **NEW BRITAIN**
DRAWING TITLE: **DRAINAGE PLAN**

PROJECT NO. **88-H035**
DRAWING NO. **DRG-07**
SHEET NO. **S**

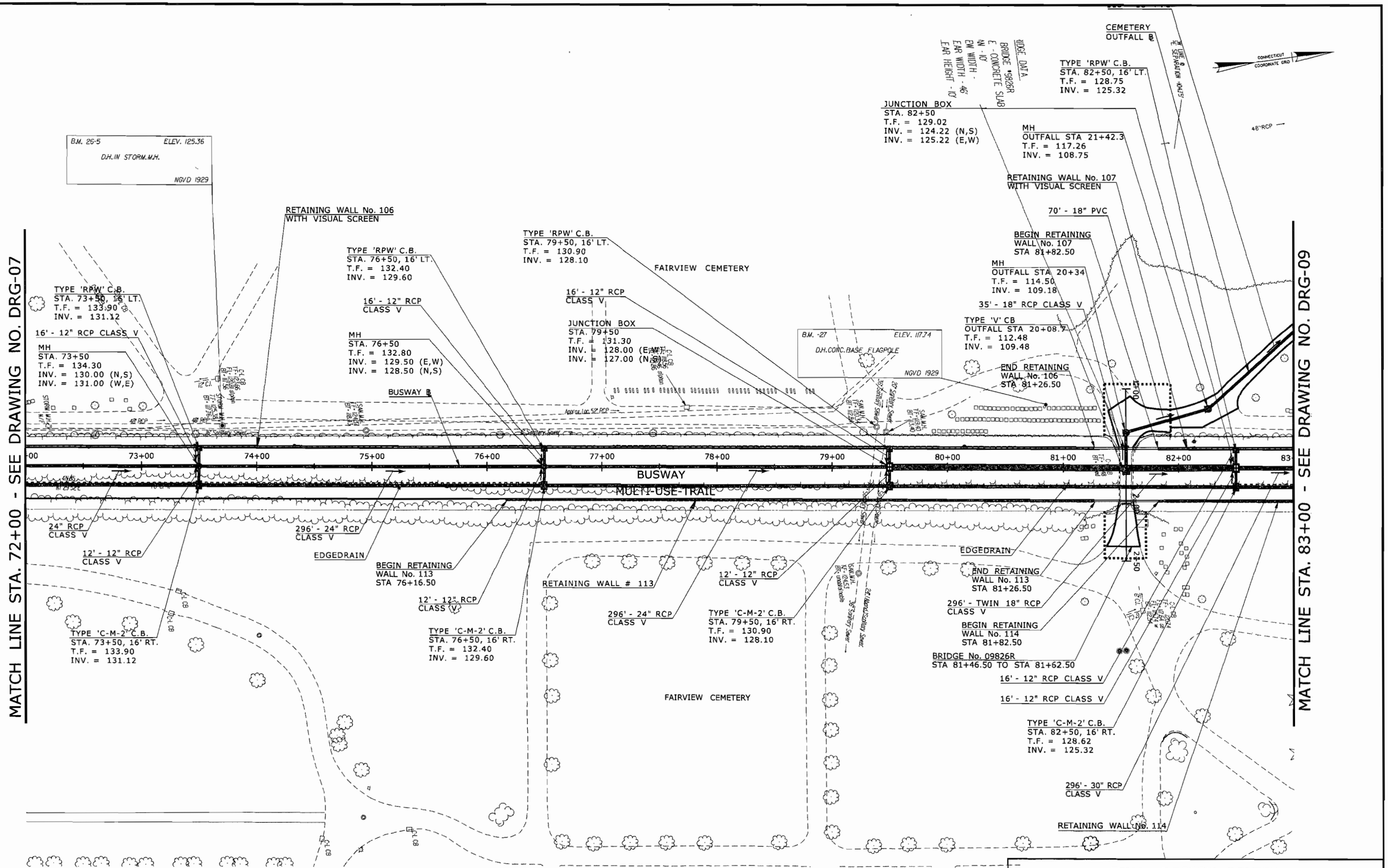

FINAL DESIGN REVIEW

REV.	DATE	REVISION DESCRIPTION	SHEET NO.
-	-	-	-
-	-	-	-
-	-	-	-
-	-	-	-
-	-	-	-
-	-	-	-

THE INFORMATION, INCLUDING ESTIMATED QUANTITIES OF WORK, SHOWN ON THESE SHEETS IS BASED ON LIMITED INVESTIGATIONS BY THE STATE AND IS IN NO WAY WARRANTED TO INDICATE THE CONDITIONS OF ACTUAL QUANTITIES OF WORK WHICH WILL BE REQUIRED.

Plotted: 7/28/2010

DESIGNER/DRAFTER: D. SHI
CHECKED BY: B. KONUK
SCALE IN FEET 0 40 80
SCALE 1"=40'

STATE OF CONNECTICUT
DEPARTMENT OF TRANSPORTATION

Filename: P:\General\Outgoing\ConnDOT\2010.0727-DEP Permit\HW_MSH_088_H035_DRG08.dgn

SIGNATURE/BLOCK: URS CORPORATION AES
APPROVED BY: -
DATE: -

PROJECT TITLE: NEW BRITAIN - HARTFORD BUSWAY

TOWN: NEW BRITAIN

DRAWING TITLE: DRAINAGE PLAN

PROJECT NO. 88-H035
DRAWING NO. DRG-08
SHEET NO. S

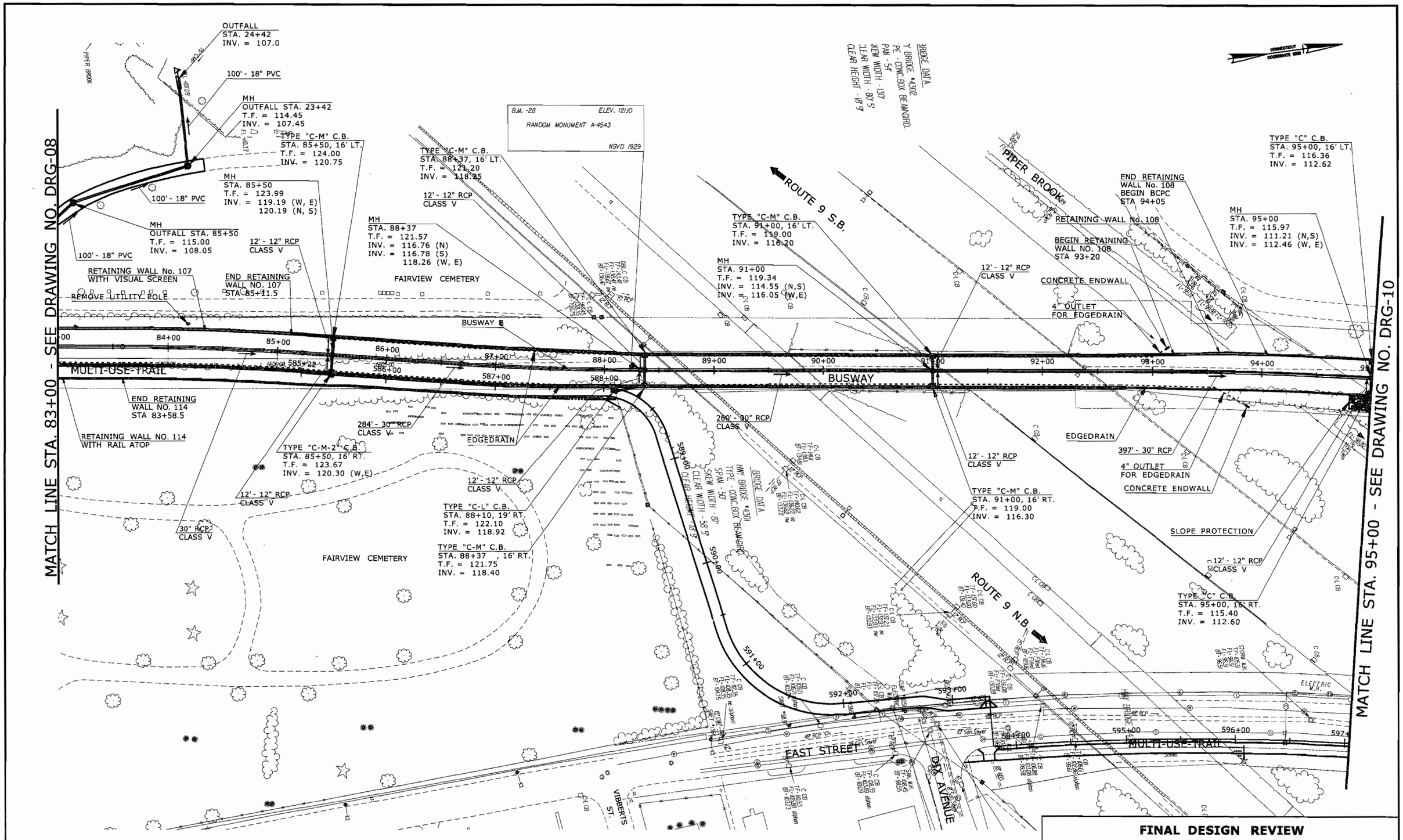

FINAL DESIGN REVIEW

REV.	DATE	REVISION DESCRIPTION	SHEET NO.
-	-	-	-
-	-	-	-
-	-	-	-
-	-	-	-
-	-	-	-
-	-	-	-

THE INFORMATION, INCLUDING ESTIMATED QUANTITIES OF WORK, SHOWN ON THESE SHEETS IS BASED ON LIMITED INVESTIGATIONS BY THE STATE AND IS IN NO WAY WARRANTED TO INDICATE THE CONDITIONS OF ACTUAL QUANTITIES OF WORK WHICH WILL BE REQUIRED.

Plotted: 7/28/2010

DESIGNER/DRAFTER: D. SHI
CHECKED BY: B. KONUK
SCALE IN FEET: 0 40 80
SCALE 1"=40'

STATE OF CONNECTICUT
DEPARTMENT OF TRANSPORTATION

Filename: P:\General\Outgoing\ConnDOT\2010_0727-DEP Permit\H-W_MSH_088_H035_DRG09.dgn

SIGNATURE/BLOCK: **URS CORPORATION AES**
APPROVED BY: -
DATE: -

PROJECT TITLE: **NEW BRITAIN - HARTFORD BUSWAY**

TOWN: **NEW BRITAIN**

DRAWING TITLE: **DRAINAGE PLAN**

PROJECT NO. **88-H035**
DRAWING NO. **DRG-09**
SHEET NO. **S**

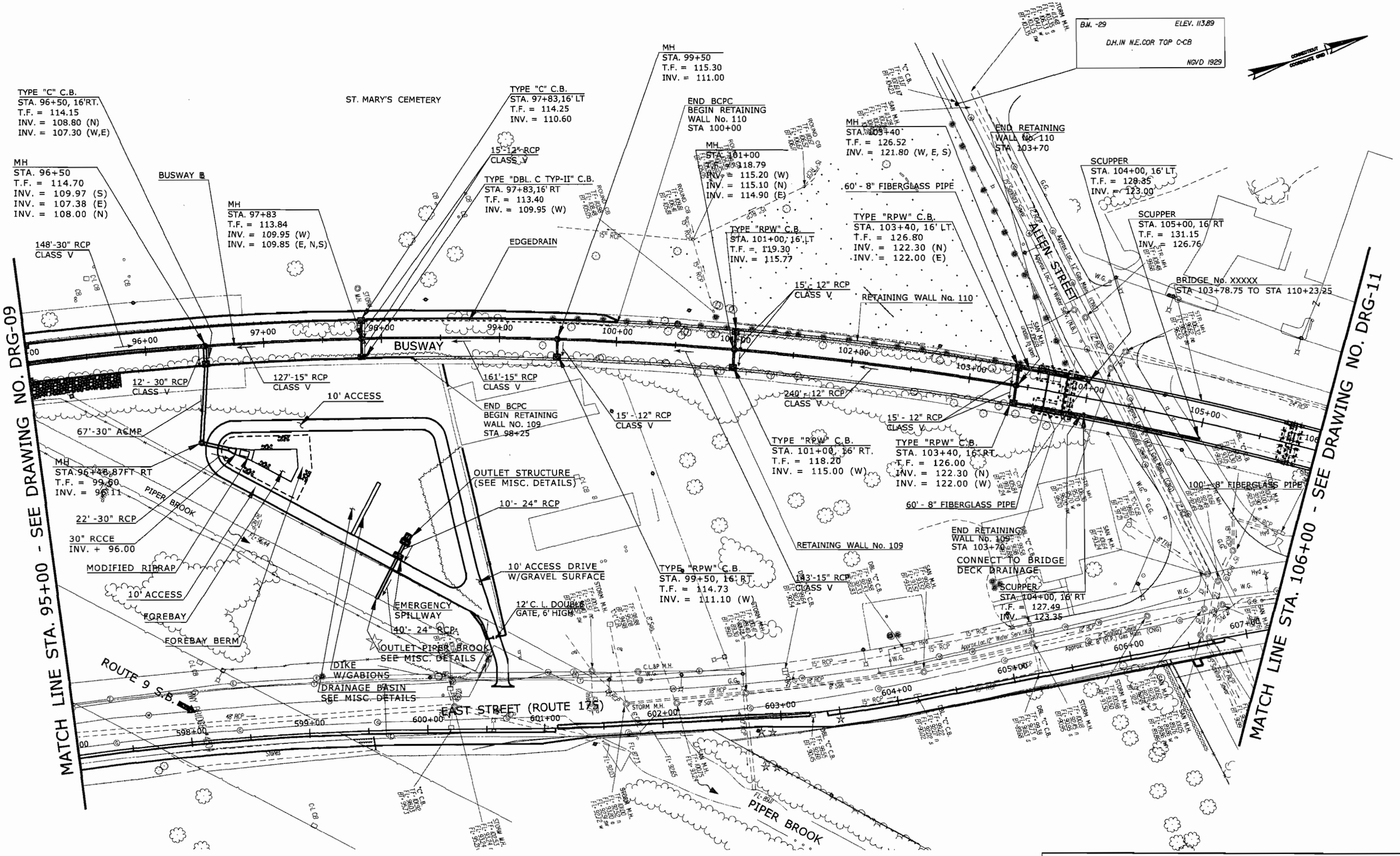

FINAL DESIGN REVIEW

REV.	DATE	REVISION DESCRIPTION	SHEET NO.
-	-	-	-
-	-	-	-
-	-	-	-
-	-	-	-
-	-	-	-
-	-	-	-

THE INFORMATION, INCLUDING ESTIMATED QUANTITIES OF WORK, SHOWN ON THESE SHEETS IS BASED ON LIMITED INVESTIGATIONS BY THE STATE AND IS IN NO WAY WARRANTED TO INDICATE THE CONDITIONS OF ACTUAL QUANTITIES OF WORK WHICH WILL BE REQUIRED.

Plotted: 7/28/2010

DESIGNER/DRAFTER: D. SHI
CHECKED BY: B. KONUK
SCALE IN FEET 0 40 80
SCALE 1"=40'

STATE OF CONNECTICUT
DEPARTMENT OF TRANSPORTATION

Filename: P:\General\Outgoing\ConnDOT\2010_0727-DEP Permit\HW_MSH_088_H035_DRG10.dgn

SIGNATURE/BLOCK: URS CORPORATION AES
APPROVED BY: -
DATE: -

PROJECT TITLE: NEW BRITAIN - HARTFORD BUSWAY

TOWN: NEW BRITAIN
DRAWING TITLE: DRAINAGE PLAN

PROJECT NO. 88-H035
DRAWING NO. DRG-10
SHEET NO. S

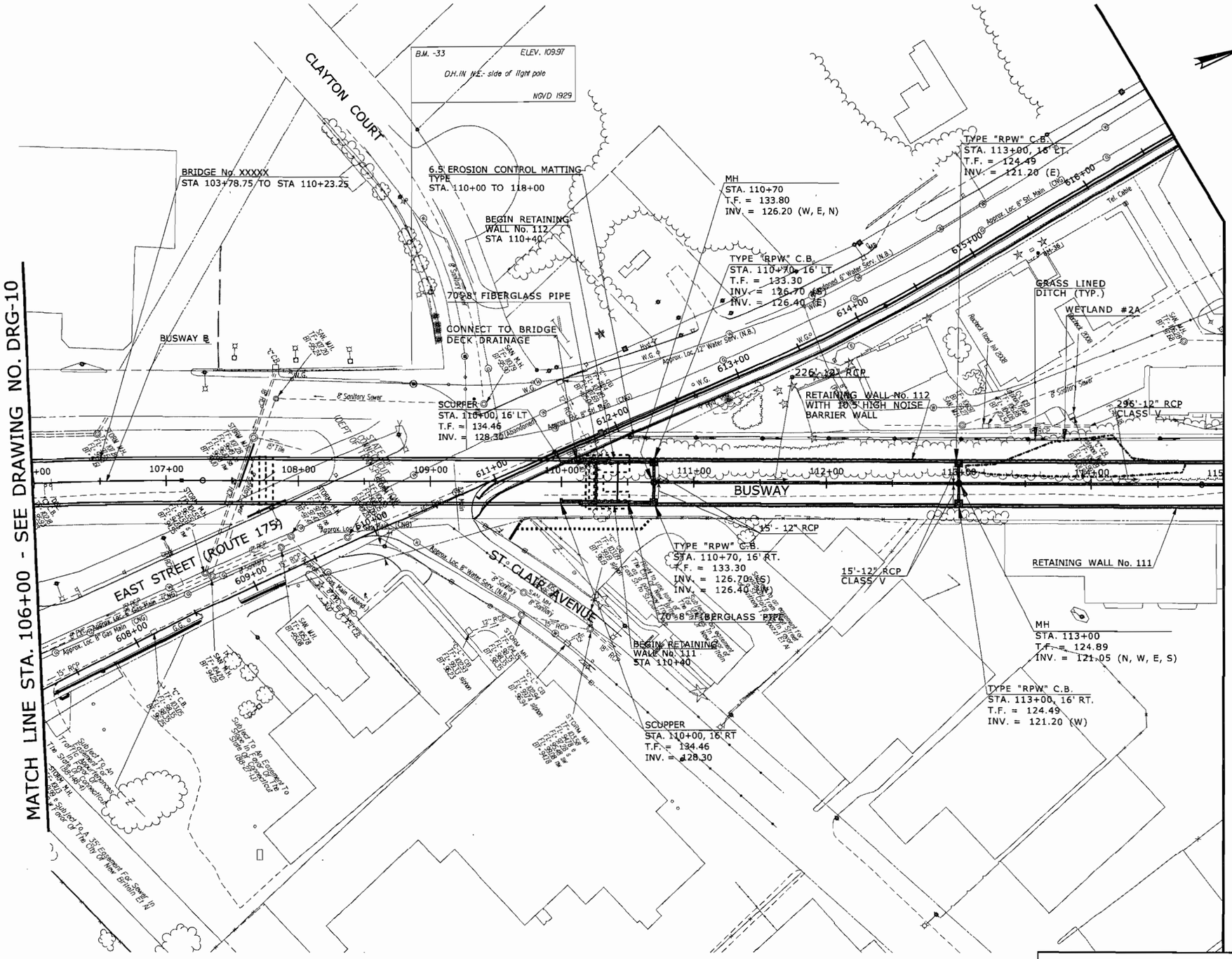

FINAL DESIGN REVIEW

REV.	DATE	REVISION DESCRIPTION	SHEET NO.
-	-	-	-
-	-	-	-
-	-	-	-
-	-	-	-
-	-	-	-
-	-	-	-
-	-	-	-

THE INFORMATION, INCLUDING ESTIMATED QUANTITIES OF WORK, SHOWN ON THESE SHEETS IS BASED ON LIMITED INVESTIGATIONS BY THE STATE AND IS IN NO WAY WARRANTED TO INDICATE THE CONDITIONS OF ACTUAL QUANTITIES OF WORK WHICH WILL BE REQUIRED.

Plotted: 7/28/2010

DESIGNER/DRAFTER: D. SHI
CHECKED BY: B. KONUK
SCALE IN FEET 0 40 80
SCALE 1"=40'

STATE OF CONNECTICUT
DEPARTMENT OF TRANSPORTATION

Filename: P:\General\Outgoing\ConnDOT\2010_0727-DEP Permit\HW_MSH_088_H035_DRG11.dgn

SIGNATURE/BLOCK: URS CORPORATION AES
APPROVED BY: - DATE: -

PROJECT TITLE: NEW BRITAIN - HARTFORD BUSWAY

TOWN: NEW BRITAIN
DRAWING TITLE: DRAINAGE PLAN

PROJECT NO. 88-H035
DRAWING NO. DRG-11
SHEET NO. S

MATCH LINE STA. 106+00 - SEE DRAWING NO. DRG-11

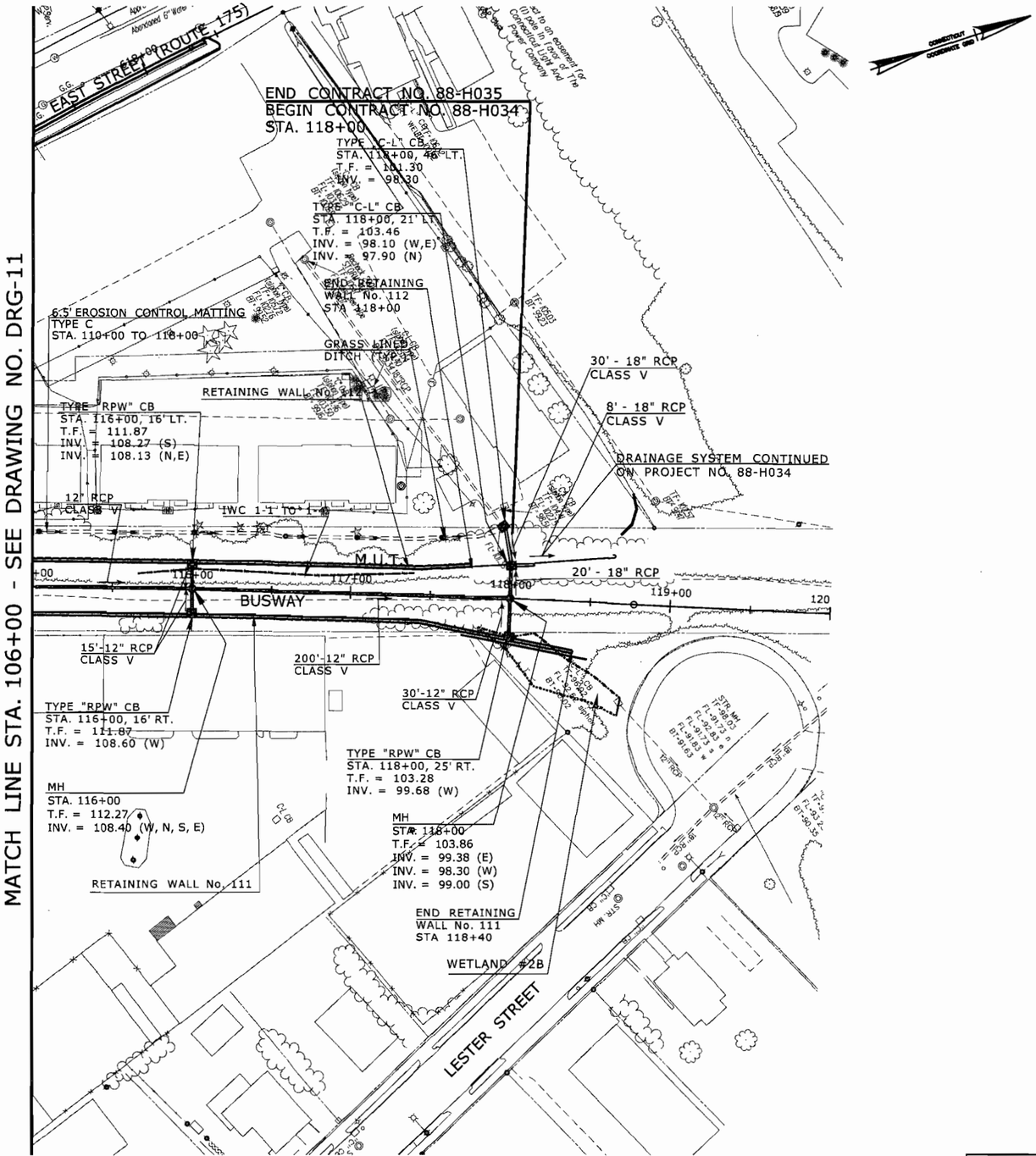

FINAL DESIGN REVIEW

REV.	DATE	REVISION DESCRIPTION	SHEET NO.
-	-	-	-
-	-	-	-
-	-	-	-
-	-	-	-
-	-	-	-
-	-	-	-

THE INFORMATION, INCLUDING ESTIMATED QUANTITIES OF WORK, SHOWN ON THESE SHEETS IS BASED ON LIMITED INVESTIGATIONS BY THE STATE AND IS IN NO WAY WARRANTED TO INDICATE THE CONDITIONS OF ACTUAL QUANTITIES OF WORK WHICH WILL BE REQUIRED.

Plotted: 7/28/2010

DESIGNER/DRAFTER: D. SHI
CHECKED BY: B. KONUK
SCALE IN FEET 0 40 80
SCALE 1"=40'

STATE OF CONNECTICUT
DEPARTMENT OF TRANSPORTATION

Filename: P:\General\Outgoing\ConnDOT\2010_0727-DEP Permit\HW_MSH_088_H035_DRG12.dgn

SIGNATURE/BLOCK: URS CORPORATION AES
APPROVED BY: - DATE: -

PROJECT TITLE: NEW BRITAIN - HARTFORD BUSWAY

TOWN: NEW BRITAIN

DRAWING TITLE: DRAINAGE PLAN

PROJECT NO. 88-H035
DRAWING NO. DRG-12
SHEET NO. S

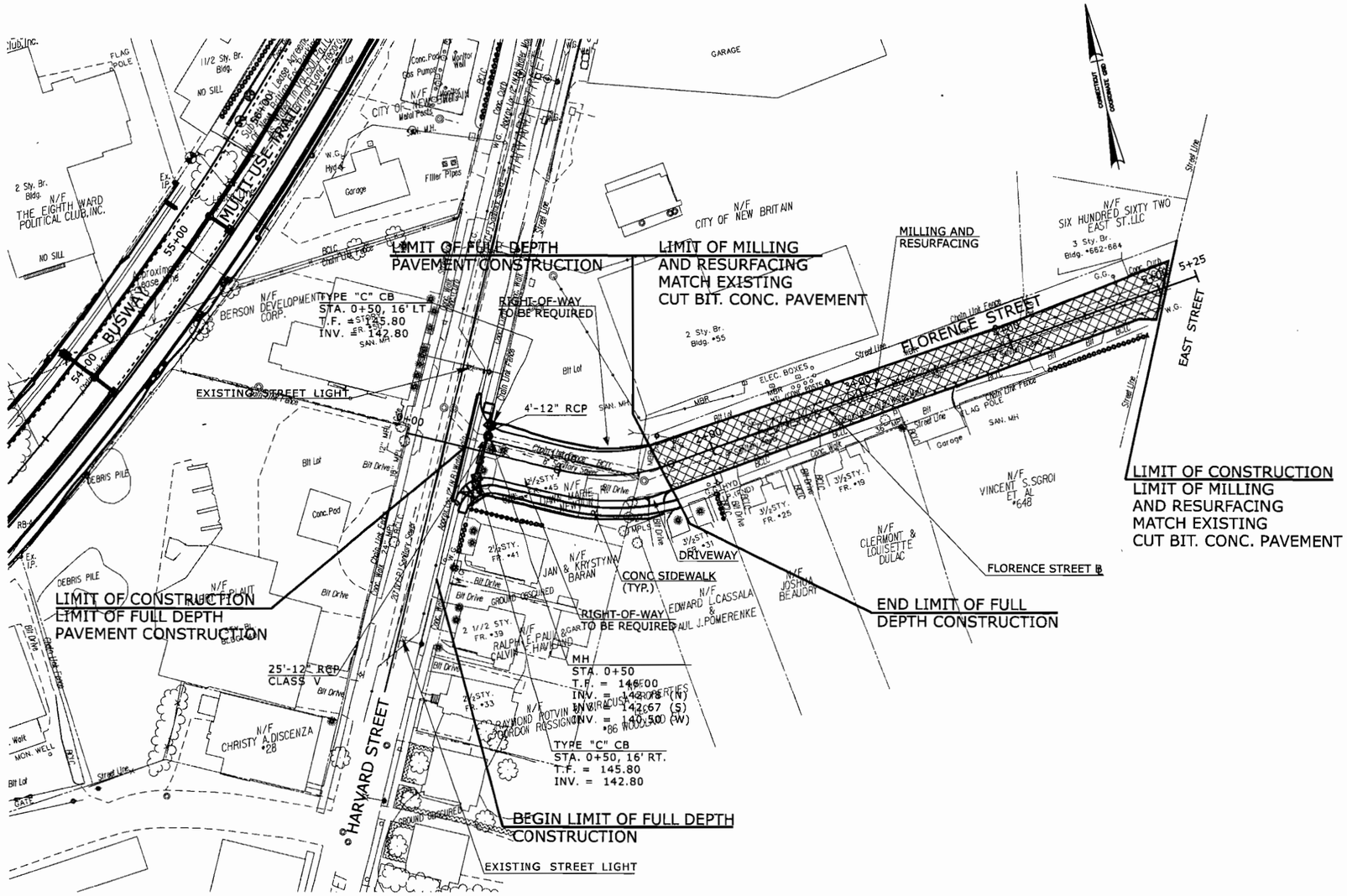

FINAL DESIGN REVIEW

REV.	DATE	REVISION DESCRIPTION	SHEET NO.
-	-	-	-
-	-	-	-
-	-	-	-
-	-	-	-
-	-	-	-
-	-	-	-

THE INFORMATION, INCLUDING ESTIMATED QUANTITIES OF WORK, SHOWN ON THESE SHEETS IS BASED ON LIMITED INVESTIGATIONS BY THE STATE AND IS IN NO WAY WARRANTED TO INDICATE THE CONDITIONS OF ACTUAL QUANTITIES OF WORK WHICH WILL BE REQUIRED.

Plotted: 7/28/2010

DESIGNER/DRAFTER: P. GILKEY
CHECKED BY: T. WALB
SCALE IN FEET 0 40 80
SCALE 1"=40'

STATE OF CONNECTICUT
DEPARTMENT OF TRANSPORTATION

Filename: P:\General\Outgoing\ConnDOT\2010_0727-DEP Permit\HW_MSH_088_H035_DRG13.dgn

SIGNATURE/BLOCK: URS CORPORATION AES
APPROVED BY: - DATE: -

PROJECT TITLE: NEW BRITAIN - HARTFORD BUSWAY

TOWN: NEW BRITAIN

DRAWING TITLE: DRAINAGE PLAN FLORENCE STREET

PROJECT NO. 88-H035
DRAWING NO. DRG-13
SHEET NO. S

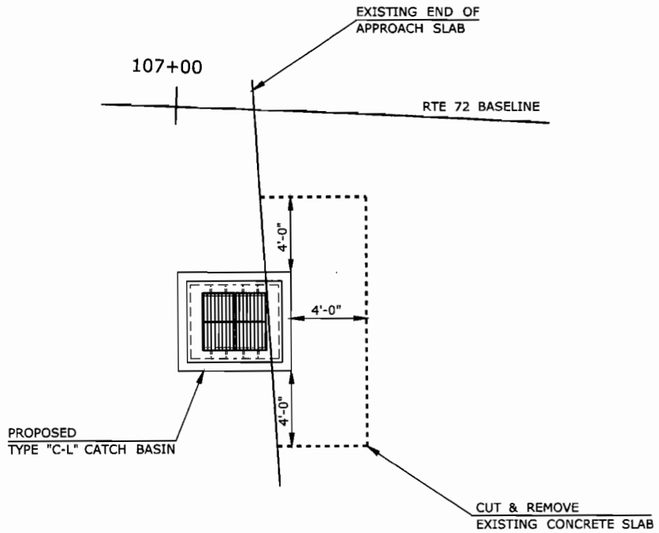

REMOVAL OF CONCRETE SLAB PLAN
RTE 71 OVERPASS

1/8" = 1' - 0"

* SEE INSTALLATION OF TYPE "C-L" CATCH BASIN

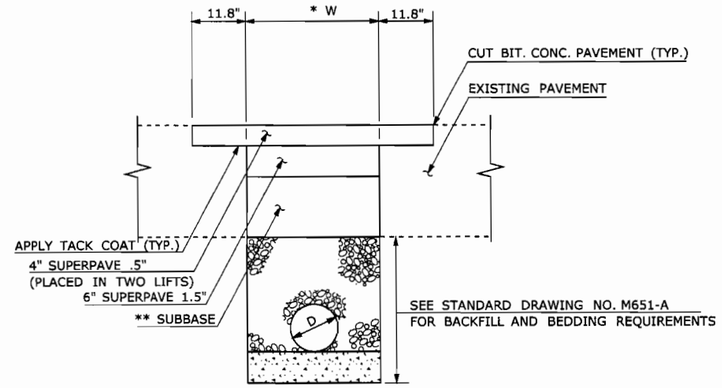

PAVEMENT REPAIR FOR TRENCH EXCAVATION

* FOR D * 30", W = D + 23.5"
FOR D -* 30", W = D + 35.5"
** AS REQUIRED TO MEET BOTTOM OF EXIST. SUBBASE

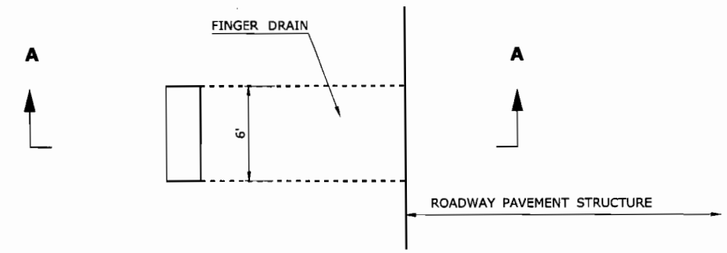

PLAN

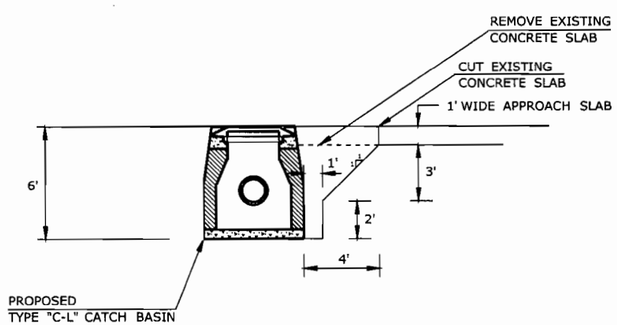

INSTALLATION OF
TYPE "C-L" CATCH BASIN DETAIL
RTE 71 OVERPASS

1/8" = 1' - 0"

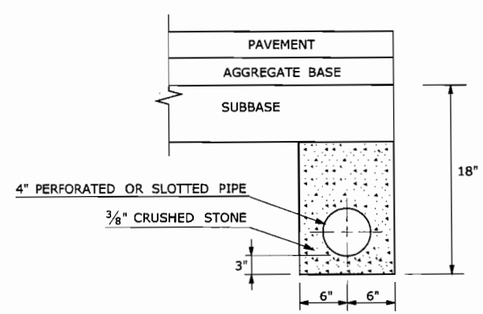

PAVEMENT EDGE DRAIN

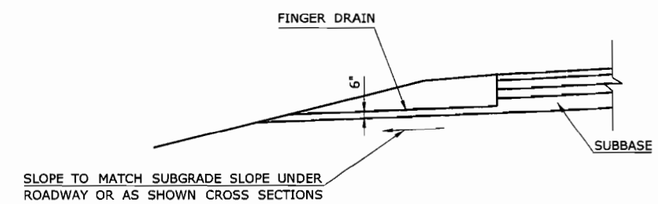

SECTION A-A

OUTLET FOR SUBBASE (FINGER DRAIN)

"FINGER DRAINS" TO BE PAID FOR UNDER THE ITEM "SUBBASE".

FINAL DESIGN REVIEW

REV.	DATE	REVISION DESCRIPTION	SHEET NO.
-	-	-	-
-	-	-	-
-	-	-	-
-	-	-	-
-	-	-	-
-	-	-	-

THE INFORMATION, INCLUDING ESTIMATED QUANTITIES OF WORK, SHOWN ON THESE SHEETS IS BASED ON LIMITED INVESTIGATIONS BY THE STATE AND IS IN NO WAY WARRANTED TO INDICATE THE CONDITIONS OF ACTUAL QUANTITIES OF WORK WHICH WILL BE REQUIRED.

Plotted: 7/28/2010

DESIGNER/DRAFTER: P. GILKEY
CHECKED BY: T. WALB
NTS

STATE OF CONNECTICUT
DEPARTMENT OF TRANSPORTATION

Filename: P:\General\Outgoing\ConnDOT\2010.0727-DEP Permit\HW_MSH_088_H035_DRG14.dgn

SIGNATURE/BLOCK: URS CORPORATION AES
APPROVED BY: -
DATE: -

PROJECT TITLE: NEW BRITAIN - HARTFORD BUSWAY

TOWN: NEW BRITAIN
DRAWING TITLE: MISCELLANEOUS DETAILS ROADWAY (1)

PROJECT NO. 88-H035
DRAWING NO. DRG-14
SHEET NO. S

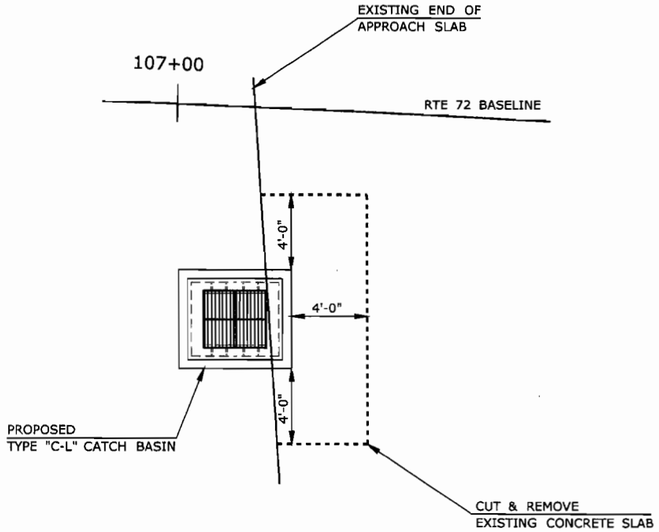

REMOVAL OF CONCRETE SLAB PLAN
RTE 71 OVERPASS

1/8" = 1' - 0"

* SEE INSTALLATION OF TYPE "C-L" CATCH BASIN

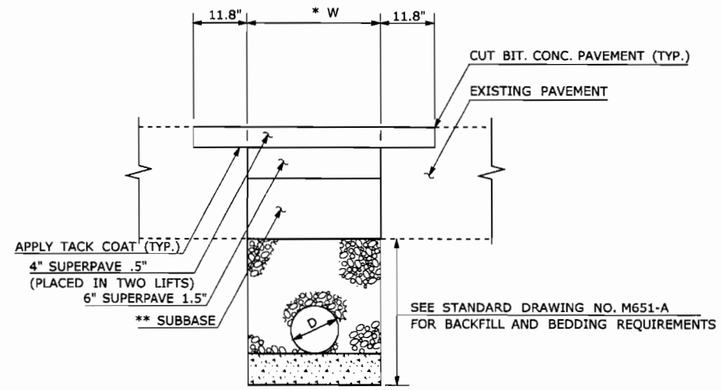

PAVEMENT REPAIR FOR TRENCH EXCAVATION

* FOR D * 30", W = D + 23.5"
FOR D -* 30", W = D + 35.5"
** AS REQUIRED TO MEET BOTTOM OF EXIST. SUBBASE

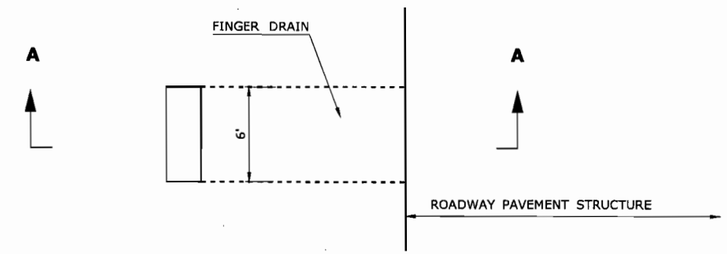

PLAN

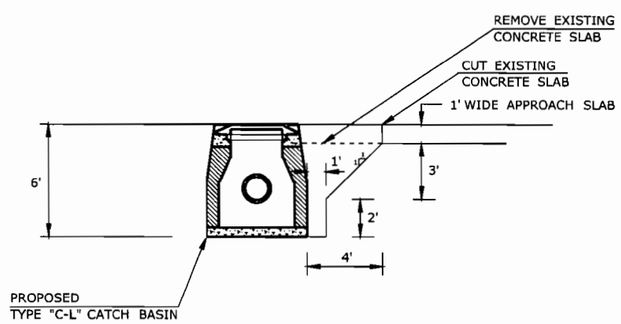

INSTALLATION OF
TYPE "C-L" CATCH BASIN DETAIL
RTE 71 OVERPASS

1/8" = 1' - 0"

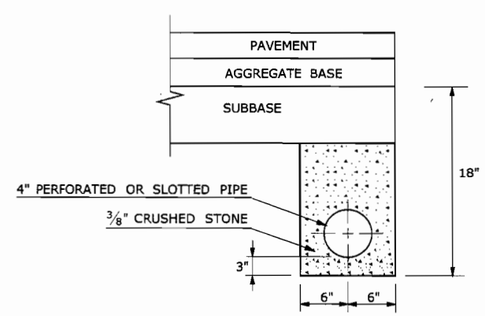

PAVEMENT EDGE DRAIN

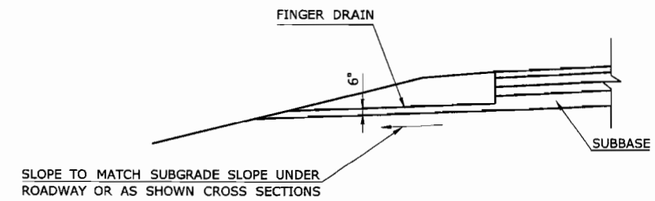

SECTION A-A

OUTLET FOR SUBBASE (FINGER DRAIN)

"FINGER DRAINS" TO BE PAID FOR UNDER THE ITEM "SUBBASE".

FINAL DESIGN REVIEW

REV.	DATE	REVISION DESCRIPTION	SHEET NO.
-	-	-	-
-	-	-	-
-	-	-	-
-	-	-	-
-	-	-	-
-	-	-	-

THE INFORMATION, INCLUDING ESTIMATED QUANTITIES OF WORK, SHOWN ON THESE SHEETS IS BASED ON LIMITED INVESTIGATIONS BY THE STATE AND IS IN NO WAY WARRANTED TO INDICATE THE CONDITIONS OF ACTUAL QUANTITIES OF WORK WHICH WILL BE REQUIRED.

Plotted: 7/28/2010

DESIGNER/DRAFTER: P. GILKEY
CHECKED BY: T. WALB
NTS

STATE OF CONNECTICUT
DEPARTMENT OF TRANSPORTATION

Filename: P:\General\Outgoing\ConnDOT\2010_0727-DEP Permit\HW_MSH_088_H035_DRG-14.dgn

SIGNATURE/BLOCK: URS CORPORATION AES
APPROVED BY: - DATE: -

PROJECT TITLE: NEW BRITAIN - HARTFORD BUSWAY

TOWN: NEW BRITAIN
DRAWING TITLE: MISCELLANEOUS DETAILS ROADWAY (1)

PROJECT NO. 88-H035
DRAWING NO. DRG-14
SHEET NO. S

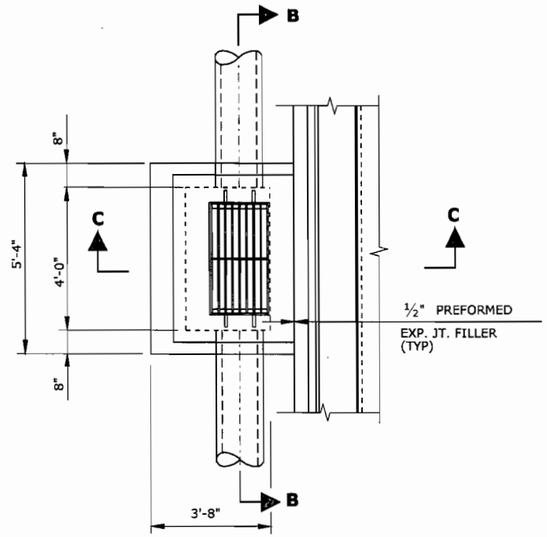

PLAN

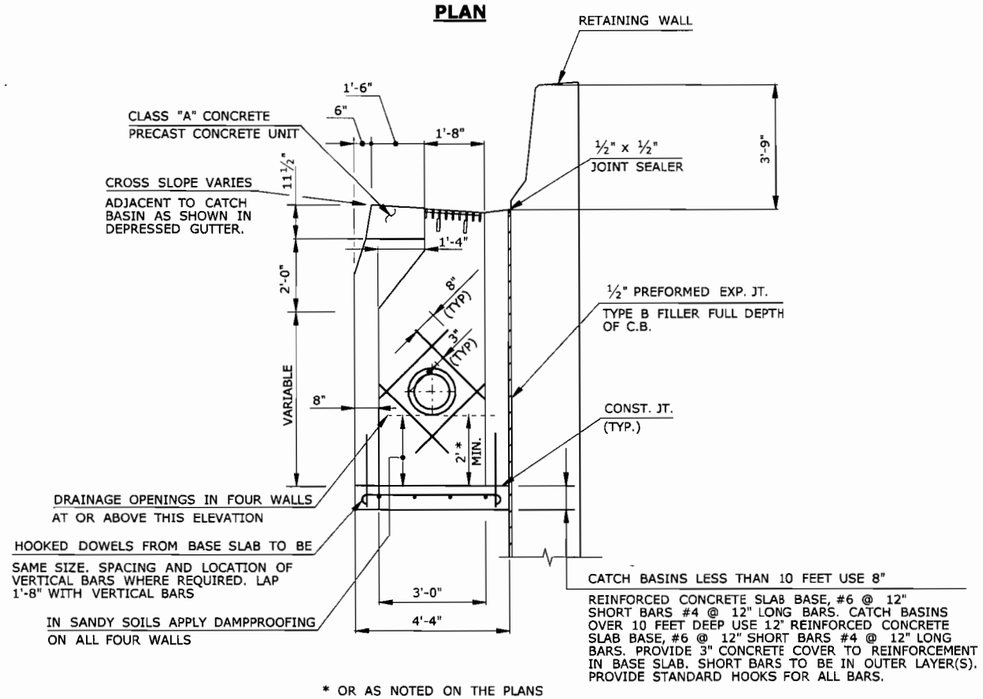

* OR AS NOTED ON THE PLANS

SECTION C-C

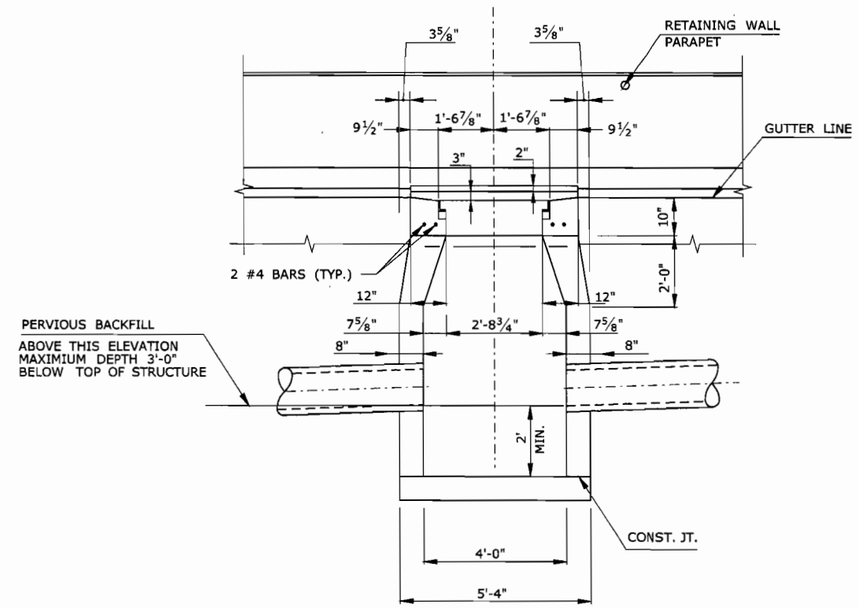

SECTION B-B

NOTES:

1. FOR DETAILS OF FRAME AND GRATE SEE SHEET MDS-04.
2. TYPE B GRATES SHALL BE USED.
3. THE COST OF ½" PREFORMED EXPANSION JOINT FILLER SHALL BE INCLUDED IN THE PRICE BID FOR THE CATCH BASIN.

TYPE "RPW" CATCH BASIN

FINAL DESIGN REVIEW

REV.	DATE	REVISION DESCRIPTION	SHEET NO.
-	-	-	-
-	-	-	-
-	-	-	-
-	-	-	-
-	-	-	-
-	-	-	-

THE INFORMATION, INCLUDING ESTIMATED QUANTITIES OF WORK, SHOWN ON THESE SHEETS IS BASED ON LIMITED INVESTIGATIONS BY THE STATE AND IS IN NO WAY WARRANTED TO INDICATE THE CONDITIONS OF ACTUAL QUANTITIES OF WORK WHICH WILL BE REQUIRED.

Plotted: 7/28/2010

DESIGNER/DRAFTER: D. CICIA
CHECKED BY: T. WALB
NTS

STATE OF CONNECTICUT
DEPARTMENT OF TRANSPORTATION

Filename: P:\General\Outgoing\ConnDOT\2010..0727-DEP Permit\HW..MSH..088..H035..DRG15.dgn

SIGNATURE/ BLOCK: URS CORPORATION AES
APPROVED BY: -
DATE: -

PROJECT TITLE: NEW BRITAIN - HARTFORD BUSWAY

TOWN: NEW BRITAIN

DRAWING TITLE: MISCELLANEOUS DETAILS TYPE "RPW" CATCH BASIN

PROJECT NO. 88-H035
DRAWING NO. DRG-15
SHEET NO. S

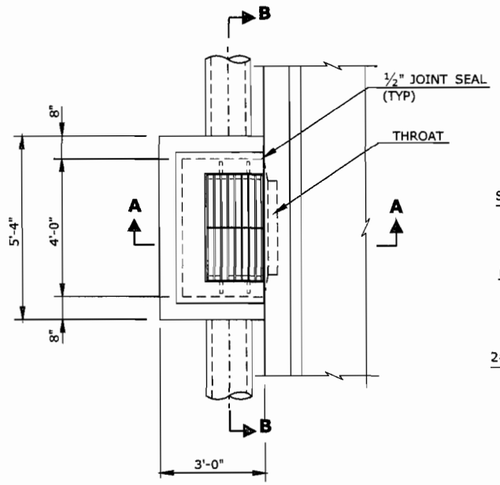

PLAN

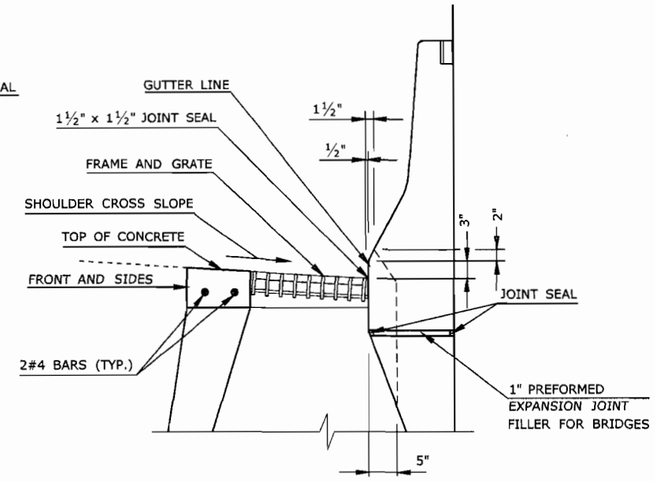

DETAIL "A"

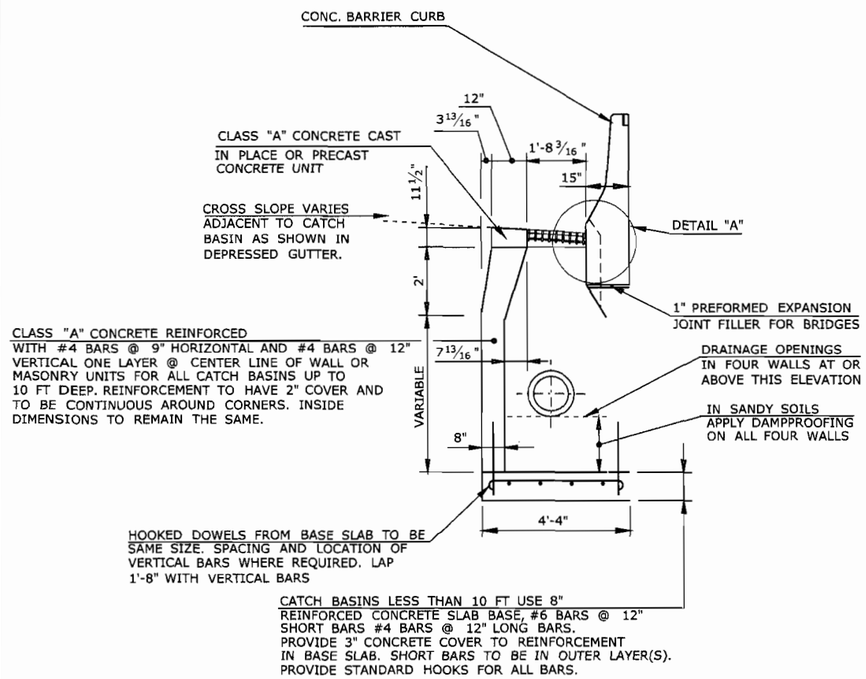

SECTION A-A

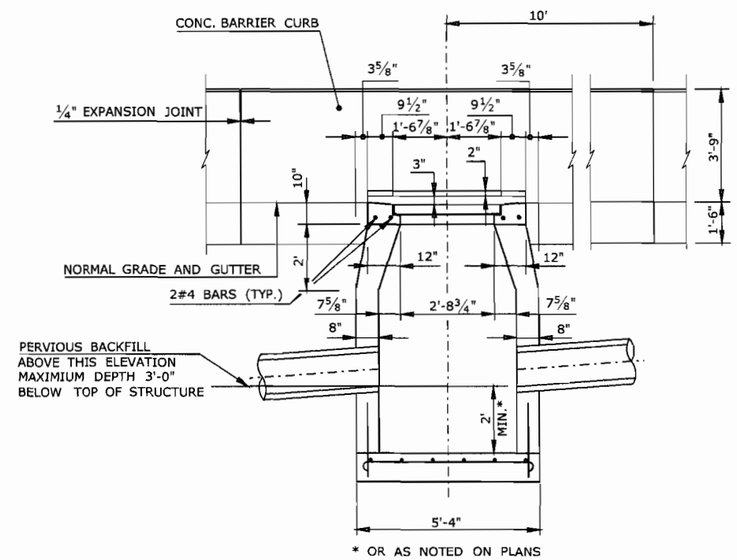

* OR AS NOTED ON PLANS

SECTION B-B

TYPE 'C-M' CATCH BASIN

NOTES:

1. FOR DETAILS OF FRAME AND GRATE SEE SHEET STD. SHT. HW-507-08
2. THE COST OF 1" PREFORMED EXPANSION JOINT FILLER FOR BRIDGES SHALL BE INCLUDED IN THE PRICE BID FOR CATCH BASIN.
3. CATCH BASIN SUMP TO BE 2 FT DEEP UNLESS OTHERWISE NOTED.

FINAL DESIGN REVIEW

REV.	DATE	REVISION DESCRIPTION	SHEET NO.
-	-	-	-
-	-	-	-
-	-	-	-
-	-	-	-
-	-	-	-
-	-	-	-

THE INFORMATION, INCLUDING ESTIMATED QUANTITIES OF WORK, SHOWN ON THESE SHEETS IS BASED ON LIMITED INVESTIGATIONS BY THE STATE AND IS IN NO WAY WARRANTED TO INDICATE THE CONDITIONS OF ACTUAL QUANTITIES OF WORK WHICH WILL BE REQUIRED.

Plotted: 7/28/2010

DESIGNER/DRAFTER: D. CICIA
CHECKED BY: T. WALB
NTS

STATE OF CONNECTICUT
DEPARTMENT OF TRANSPORTATION

Filename: P:\General\Outgoing\ConnDOT\2010_0727-DEP Permit\HW_MSH_088_H035_DRG16.dgn

SIGNATURE/BLOCK: URS CORPORATION AES
APPROVED BY: -
DATE: -

PROJECT TITLE: NEW BRITAIN - HARTFORD BUSWAY

TOWN: NEW BRITAIN

DRAWING TITLE: MISCELLANEOUS DETAILS TYPE "C-M" CATCH BASIN

PROJECT NO. 88-H035
DRAWING NO. DRG-16
SHEET NO. S

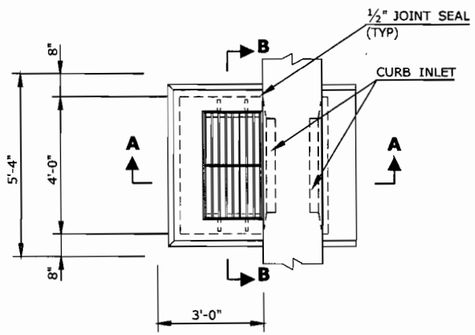

PLAN

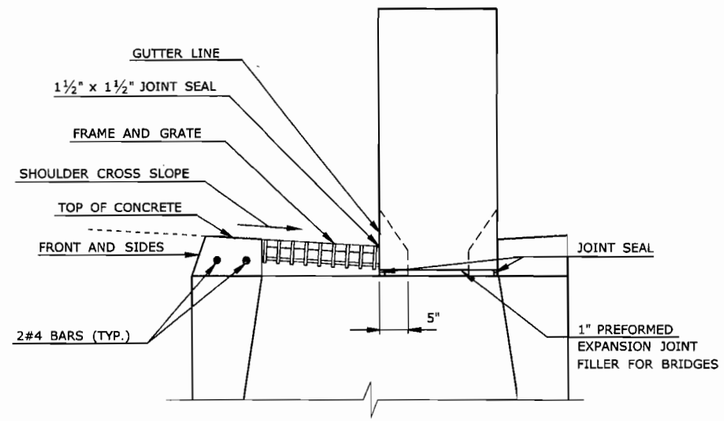

DETAIL "A"

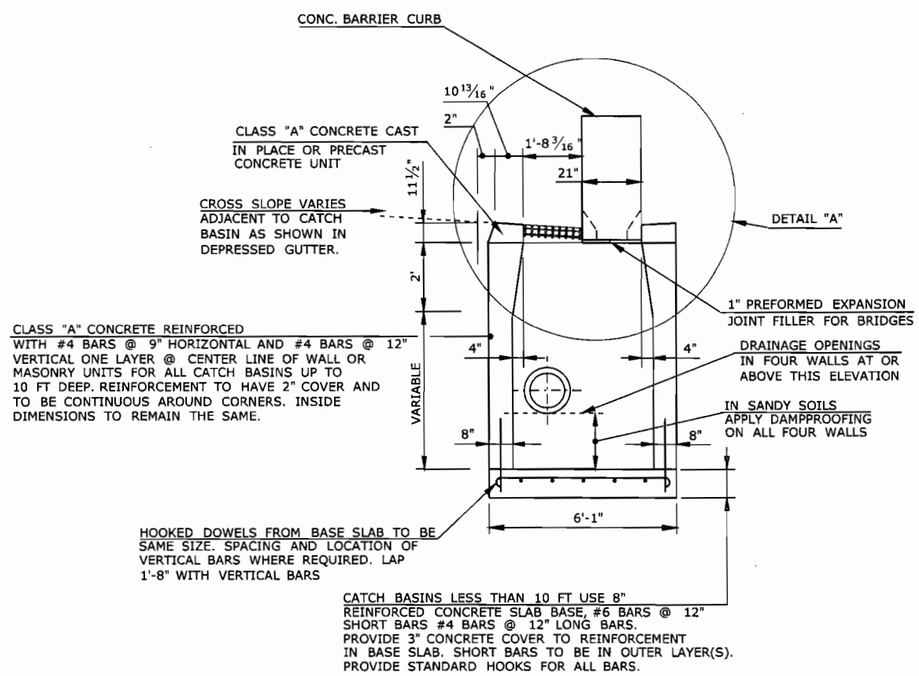

SECTION A-A

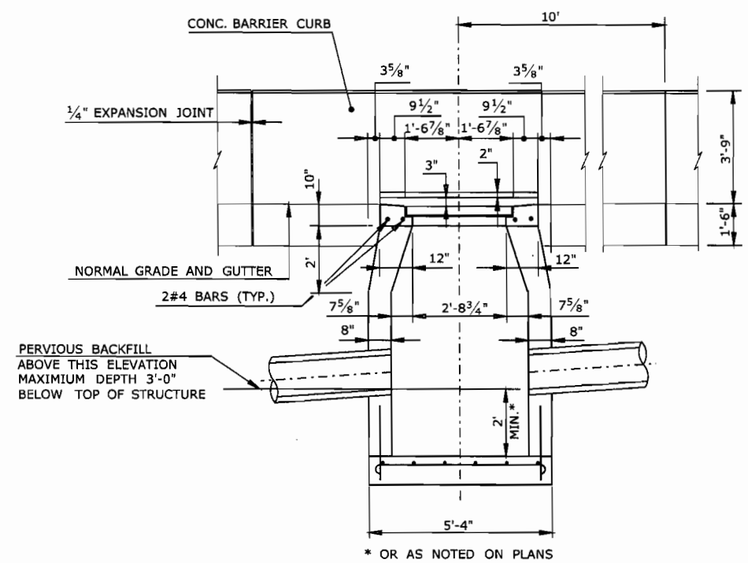

* OR AS NOTED ON PLANS

SECTION B-B

TYPE 'CM-2' CATCH BASIN

NOTES:

1. FOR DETAILS OF FRAME AND GRATE SEE SHEET STD. SHT. HW-507-08
2. THE COST OF 1" PREFORMED EXPANSION JOINT FILLER FOR BRIDGES SHALL BE INCLUDED IN THE PRICE BID FOR CATCH BASIN.
3. CATCH BASIN SUMP TO BE 2 FT DEEP UNLESS OTHERWISE NOTED.

FINAL DESIGN REVIEW

REV.	DATE	REVISION DESCRIPTION	SHEET NO.
-	-	-	-
-	-	-	-
-	-	-	-
-	-	-	-
-	-	-	-
-	-	-	-

THE INFORMATION, INCLUDING ESTIMATED QUANTITIES OF WORK, SHOWN ON THESE SHEETS IS BASED ON LIMITED INVESTIGATIONS BY THE STATE AND IS IN NO WAY WARRANTED TO INDICATE THE CONDITIONS OF ACTUAL QUANTITIES OF WORK WHICH WILL BE REQUIRED.

Plotted: 7/28/2010

DESIGNER/DRAFTER: D. CICIA
CHECKED BY: T. WALB
NTS

STATE OF CONNECTICUT
DEPARTMENT OF TRANSPORTATION

Filename: P:\General\Outgoing\ConnDOT\2010.0727-DEP Permit\HW.MSH.088.H035.DRG17.dgn

SIGNATURE/BLOCK: URS CORPORATION AES
APPROVED BY: -
DATE: -

PROJECT TITLE: NEW BRITAIN - HARTFORD BUSWAY

TOWN: NEW BRITAIN
DRAWING TITLE: MISCELLANEOUS DETAILS TYPE "CM-2" CATCH BASIN

PROJECT NO. 88-H035
DRAWING NO. DRG-17
SHEET NO. S

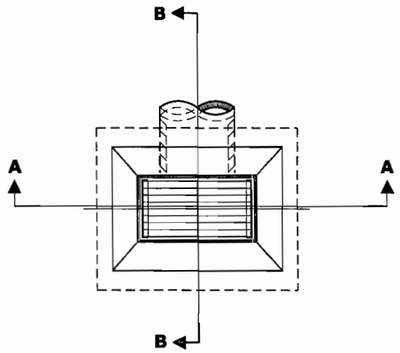

PLAN

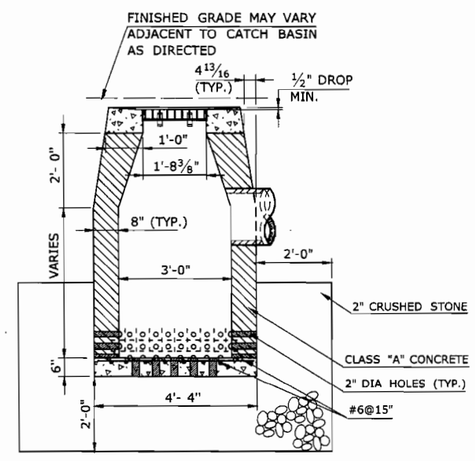

SECTION-B

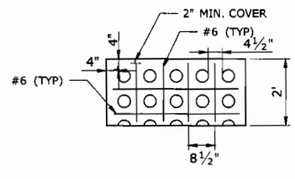

WALL DETAIL (BOTTOM PART)

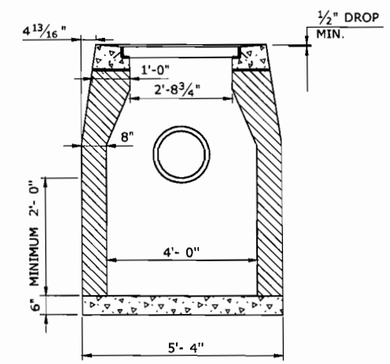

SECTION-A

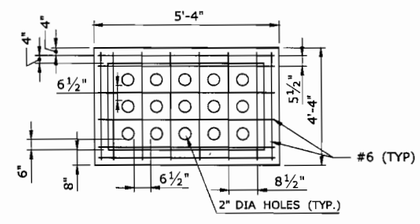

SLAB DETAIL FOR TYPE "V" CB

NOTES:

1. THE COST OF MORTAR FILL AND JOINT SEAL SHALL BE INCLUDED IN THE CONTRACT UNIT PRICE TYPE "V" CATCH BASIN.

TYPE "V" CATCH BASIN

FINAL DESIGN REVIEW

REV.	DATE	REVISION DESCRIPTION	SHEET NO.
-	-	-	-
-	-	-	-
-	-	-	-
-	-	-	-
-	-	-	-
-	-	-	-

THE INFORMATION, INCLUDING ESTIMATED QUANTITIES OF WORK, SHOWN ON THESE SHEETS IS BASED ON LIMITED INVESTIGATIONS BY THE STATE AND IS IN NO WAY WARRANTED TO INDICATE THE CONDITIONS OF ACTUAL QUANTITIES OF WORK WHICH WILL BE REQUIRED.

Plotted: 7/28/2010

DESIGNER/DRAFTER: D. SHI
CHECKED BY: T. WALB
NTS

STATE OF CONNECTICUT
DEPARTMENT OF TRANSPORTATION

Filename: P:\General\Outgoing\ConnDOT\2010_0727-DEP Permit\HW_MSH_088_H035_DRG-18.dgn

SIGNATURE/BLOCK: URS CORPORATION AES
APPROVED BY: -
DATE: -

PROJECT TITLE: NEW BRITAIN - HARTFORD BUSWAY

TOWN: NEW BRITAIN

DRAWING TITLE: MISCELLANEOUS DETAILS TYPE "V" CATCH BASIN

PROJECT NO. 88-H035
DRAWING NO. DRG-18
SHEET NO. S

GENERAL NOTES:

1. REINFORCEMENT SHALL CONFORM TO ASTM A615, GRADE 60.
2. DETAILS ON THIS SHEET SHOW STANDARD REINFORCEMENT. WELDED WIRE FABRIC WITH AN AREA EQUAL TO OR GREATER THAN THE REINFORCING SHOWN MAY BE SUBSTITUTED.
3. ALL LAP SPLICES, DEVELOPMENT LENGTHS, BENDS FOR REINFORCEMENT, AND WELDED WIRE FABRIC SHALL CONFORM TO AASHTO STANDARD SPECIFICATIONS FOR HIGHWAY BRIDGES.
4. ALL REINFORCEMENT SHALL HAVE A MINIMUM CLEAR COVER OF 2", EXCEPT FOR BENEATH BOTTOM REINFORCEMENT IN TOP SLABS, WHERE THE MINIMUM MAY BE 1½"(38).
5. MINIMUM CONCRETE COMPRESSIVE STRENGTH Fc' = 4000 PSI SHALL BE OBTAINED PRIOR TO SHIPPING.
6. FOR JOINT DETAILS SEE STANDARD SHEET HW-507-04.
7. SEE STANDARD DRAWING HW-507-08 FOR CATCH BASIN FRAMES AND GRATES.
8. THE LATEST STATE OF CONNECTICUT STANDARD SPECIFICATIONS AND SUPPLEMENTALS SHALL GOVERN.
9. FOR ADDITIONAL DETAILS, SEE STANDARD CATCH BASIN SHEETS.
10. BUTYL RUBBER JOINT SEAL SHALL CONFORM TO AASHTO M-198 AND MORTAR SHALL CONFORM TO THE LATEST STATE OF CONNECTICUT STANDARD SPECIFICATIONS MATERIAL SECTION M11.04.
11. SHRINKAGE AND TEMPERATURE REINFORCEMENT SHALL BE PROVIDED IN THE TOPS OF SLABS. THE TOTAL AREA OF REINFORCEMENT PROVIDED SHALL BE AT LEAST 0.125 SQUARE INCHES PER FOOT IN EACH DIRECTION. THE MAXIMUM SPACING OF THIS REINFORCEMENT SHALL NOT EXCEED 18 INCHES.

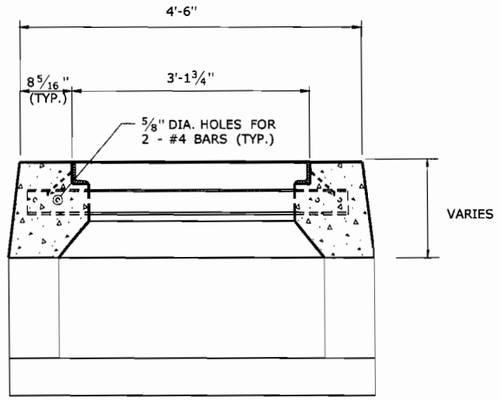

SECTION C

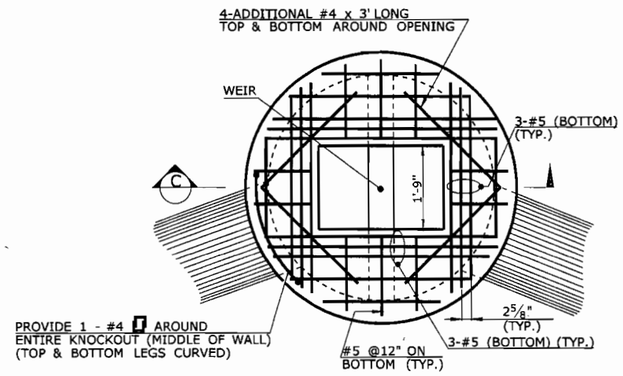

PLAN

WEIR DATA TABULATION	
TOP ELEVATION	160.00
ORIFICE 'A'	
INVERT ELEV.	157.00
DIAMETER	8"

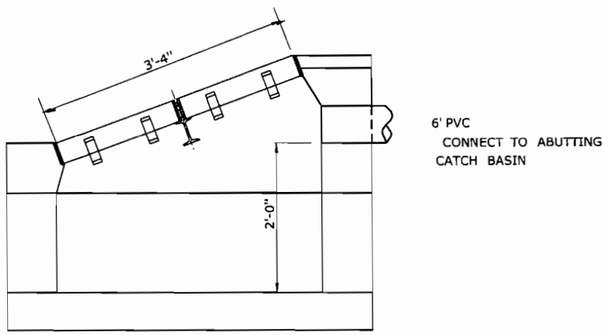

SECTION C

TYPE "C-B" CATCH BASIN DOUBLE GRATE - TYPE I

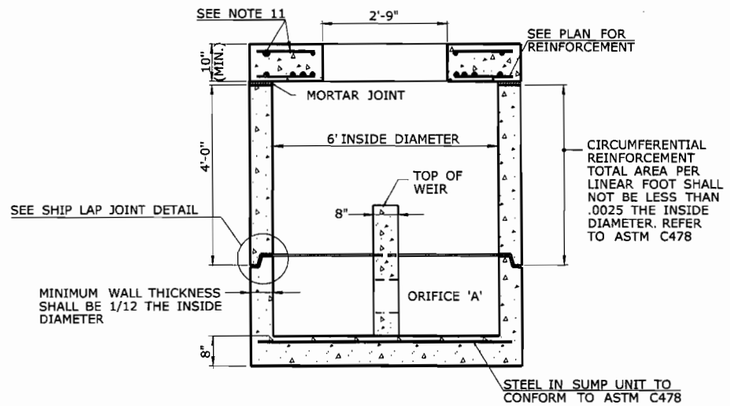

SECTION C

SPECIAL ROUND TYPE "C-L" CATCH BASIN

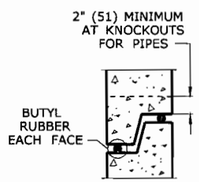

SHIP LAP JOINT DETAIL

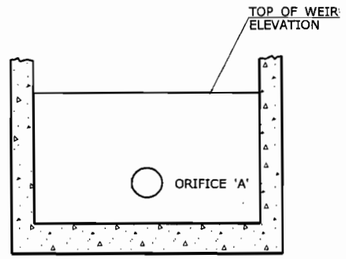

WEIR DETAIL

FINAL DESIGN REVIEW

REV.	DATE	REVISION DESCRIPTION	SHEET NO.
-	-	-	-
-	-	-	-
-	-	-	-
-	-	-	-
-	-	-	-
-	-	-	-

THE INFORMATION, INCLUDING ESTIMATED QUANTITIES OF WORK, SHOWN ON THESE SHEETS IS BASED ON LIMITED INVESTIGATIONS BY THE STATE AND IS IN NO WAY WARRANTED TO INDICATE THE CONDITIONS OF ACTUAL QUANTITIES OF WORK WHICH WILL BE REQUIRED.

Plotted: 7/28/2010

DESIGNER/DRAFTER: D. SHI
CHECKED BY: T. WALB
NTS

STATE OF CONNECTICUT
DEPARTMENT OF TRANSPORTATION

Filename: P:\General\Outgoing\ConnDOT\2010_0727-DEP Permit\HW_MSH_088_H035_DRG19.dgn

SIGNATURE/BLOCK: URS CORPORATION AES
APPROVED BY: -
DATE: -

PROJECT TITLE: NEW BRITAIN - HARTFORD BUSWAY

TOWN: NEW BRITAIN

DRAWING TITLE: MISCELLANEOUS DETAILS SPECIAL CATCH BASINS

PROJECT NO. 88-H035
DRAWING NO. DRG-19
SHEET NO. S

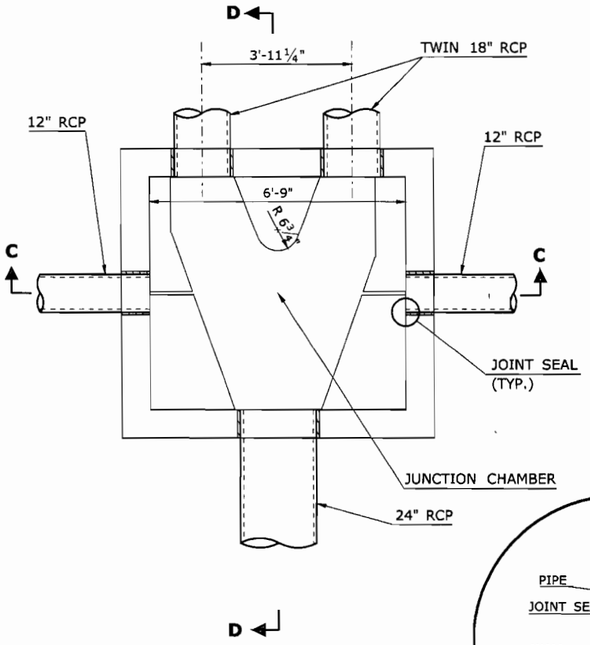

INVERT PLAN
SCALE: ½" = 1'

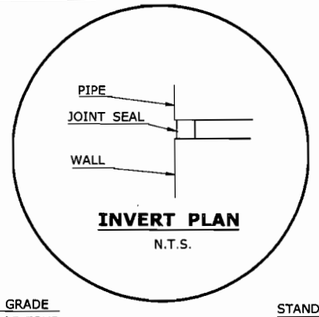

INVERT PLAN
N.T.S.

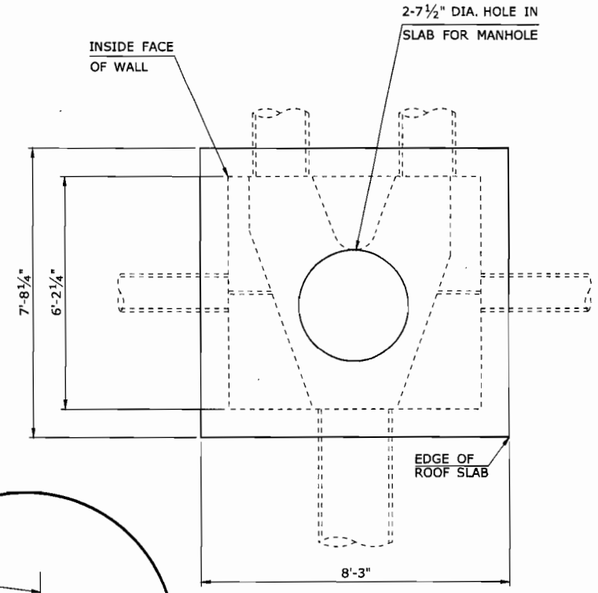

ROOF PLAN
SCALE: ½" = 1'

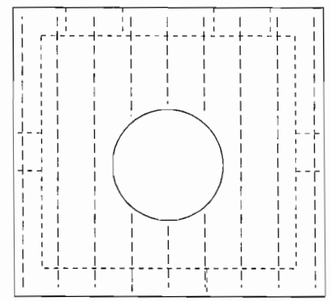

ROOF PLAN
SCALE: ½" = 1'

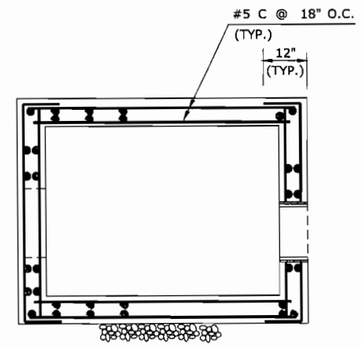

SECTION E-E
SCALE: ½" = 1'

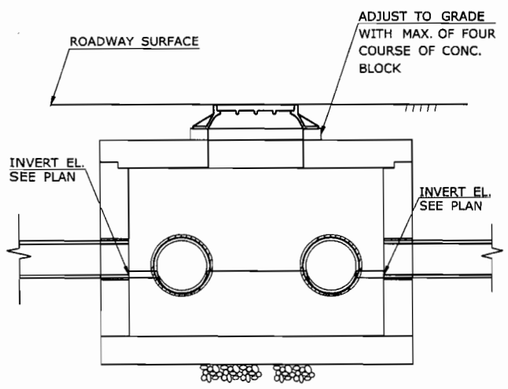

SECTION C-C
SCALE: ½" = 1'

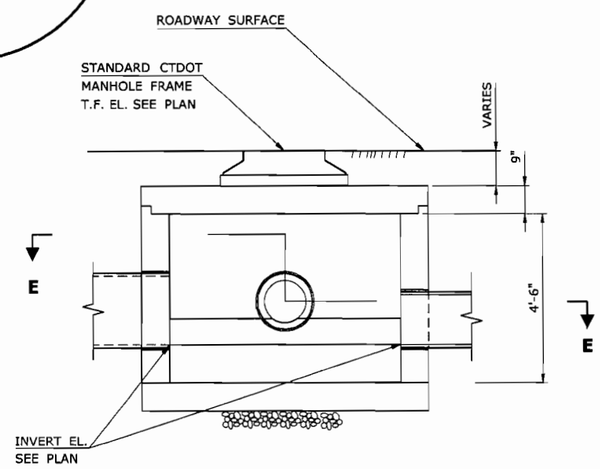

SECTION D-D
SCALE: ½" = 1'

JUNCTION BOX

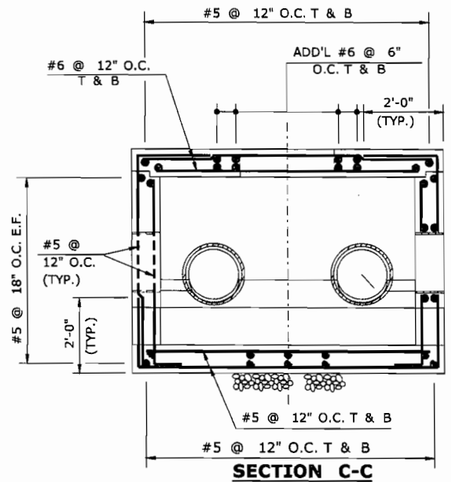

SECTION C-C
SCALE: ½" = 1'

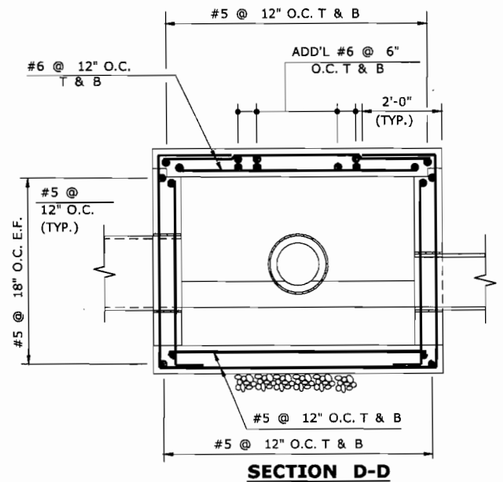

SECTION D-D
SCALE: ½" = 1'

REINFORCING DETAILS

FINAL DESIGN REVIEW

REV.	DATE	REVISION DESCRIPTION	SHEET NO.
-	-	-	-
-	-	-	-
-	-	-	-
-	-	-	-
-	-	-	-
-	-	-	-

THE INFORMATION, INCLUDING ESTIMATED QUANTITIES OF WORK, SHOWN ON THESE SHEETS IS BASED ON LIMITED INVESTIGATIONS BY THE STATE AND IS IN NO WAY WARRANTED TO INDICATE THE CONDITIONS OF ACTUAL QUANTITIES OF WORK WHICH WILL BE REQUIRED.

Plotted: 7/28/2010

DESIGNER/DRAFTER: P. GILKEY
CHECKED BY: T. WALB
NTS

STATE OF CONNECTICUT
DEPARTMENT OF TRANSPORTATION

Filename: P:\General\Outgoing\ConnDOT\2010_0727-DEP Permit\HW_MSH_088_H035_DRG-20.dgn

SIGNATURE/BLOCK: URS CORPORATION AES
APPROVED BY: -
DATE: -

PROJECT TITLE: NEW BRITAIN - HARTFORD BUSWAY

TOWN: NEW BRITAIN
DRAWING TITLE: MISCELLANEOUS DETAILS JUNCTION BOX

PROJECT NO. 88-H035
DRAWING NO. DRG-20
SHEET NO. S

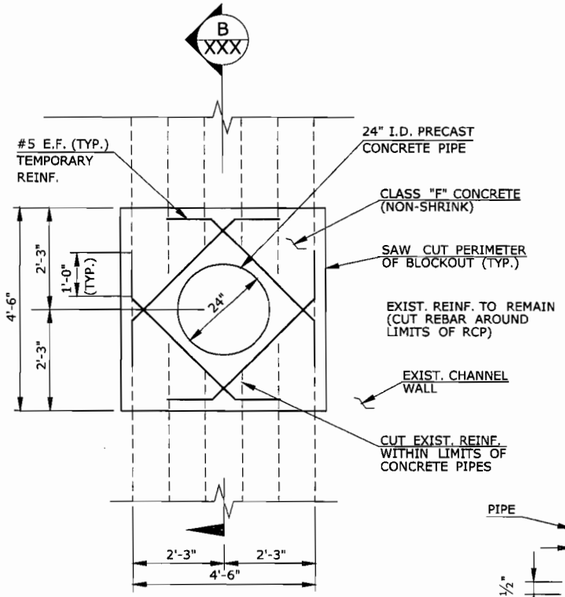

ELEVATION

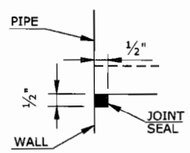

JOINT SEAL DETAIL

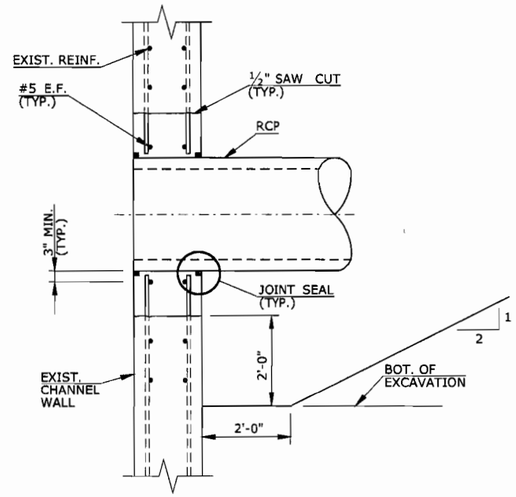

SECTION

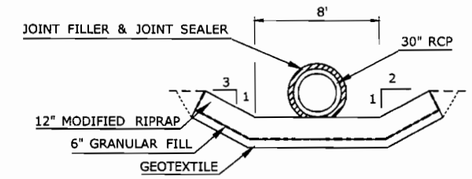

SECTION D-D

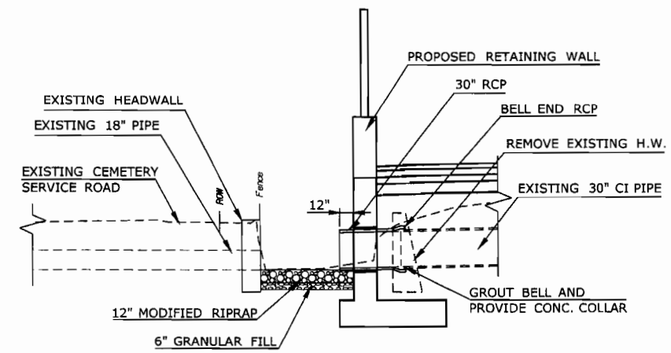

SECTION C-C

DRAINAGE OUTLET AT PIPER BROOK CHANNEL

CONSTRUCTION SEQUENCE:

1. SAWCUT (1/2" MAX. DEPTH) PERIMETER OF PIPE BLOCKOUT ON EACH FACE OF WALL.
2. REMOVE EXISTING MASONRY AND MAINTAIN EXISTING REINFORCEMENT.
3. PARTIALLY CUT REINFORCEMENT THAT OBSTRUCTS PIPE OPENING.
4. INSTALL TEMPERATURE REINFORCEMENT AS SHOWN. FORM AND POUR CONCRETE.
5. REMOVE FORM AFTER CONCRETE HAS SET AND APPLY JOINT SEAL.

NOTES:

1. THIS WORK SHALL BE PAID FOR UNDER THE FOLLOWING ITEMS;STRUCTURE EXCAVATION, REMOVAL OF EXISTING MASONRY, DEFORMED STEEL BARS, CLASS "F" CONCRETE, JOINT SEAL SHALL BE INCLUDED IN THE COST OF CLASS "F" CONCRETE.
2. IN THE EVENT THAT EXISTING REINFORCEMENT IS INADVERTENTLY CUT. DRILL AND GROUT REPLACEMENT BAR ADJACENT TO CUT REBAR.
3. CONTRACTOR SHALL FURNISH, INSTALL, AND REMOVE A TEMPORARY SUPPORT SYSTEM REQUIRED TO PERFORM THIS WORK. THE SUPPORT SYSTEM SHALL INCLUDE PROVISIONS TO CONTAIN DEBRIS FROM THE SAWCUTTING AND REMOVAL OF THE EXISTING CONCRETE.
4. TEMPORARY SUPPORT SYSTEM SHALL NOT EXTEND BELOW THE ELEVATION OF ORDINARY HIGH WATER (OHW).
5. SAWCUTTING ON THE CHANNEL FACE OF THE WALL SHALL BE PERFORMED DRY WITHOUT USE OF WATER TO LUBRICATE THE SAW BLADE.

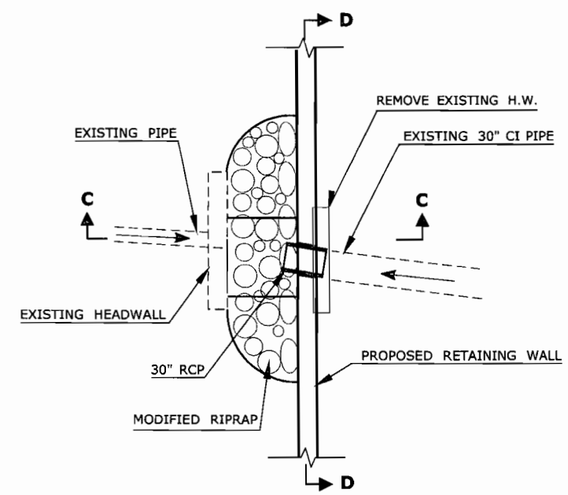

PLAN

OUTLET FOR EXISTING CULVERT

(STA. 71+25 LT.)

FINAL DESIGN REVIEW

REV.	DATE	REVISION DESCRIPTION	SHEET NO.
-	-	-	-
-	-	-	-
-	-	-	-
-	-	-	-
-	-	-	-
-	-	-	-

THE INFORMATION, INCLUDING ESTIMATED QUANTITIES OF WORK, SHOWN ON THESE SHEETS IS BASED ON LIMITED INVESTIGATIONS BY THE STATE AND IS IN NO WAY WARRANTED TO INDICATE THE CONDITIONS OF ACTUAL QUANTITIES OF WORK WHICH WILL BE REQUIRED.

Plotted: 7/28/2010

DESIGNER/DRAFTER: P. GILKEY
CHECKED BY: T.WALB
NTS

STATE OF CONNECTICUT
DEPARTMENT OF TRANSPORTATION

Filename: P:\General\Outgoing\ConnDOT\2010_0727-DEP Permit\HW_MSH_088_H035_DRG21.dgn

SIGNATURE/ BLOCK: URS CORPORATION AES
APPROVED BY: -
DATE: -

PROJECT TITLE: NEW BRITAIN - HARTFORD BUSWAY

TOWN: NEW BRITAIN
DRAWING TITLE: MISCELLANEOUS DETAILS OUTLET DETAILS

PROJECT NO. 88-H035
DRAWING NO. DRG-21
SHEET NO. S

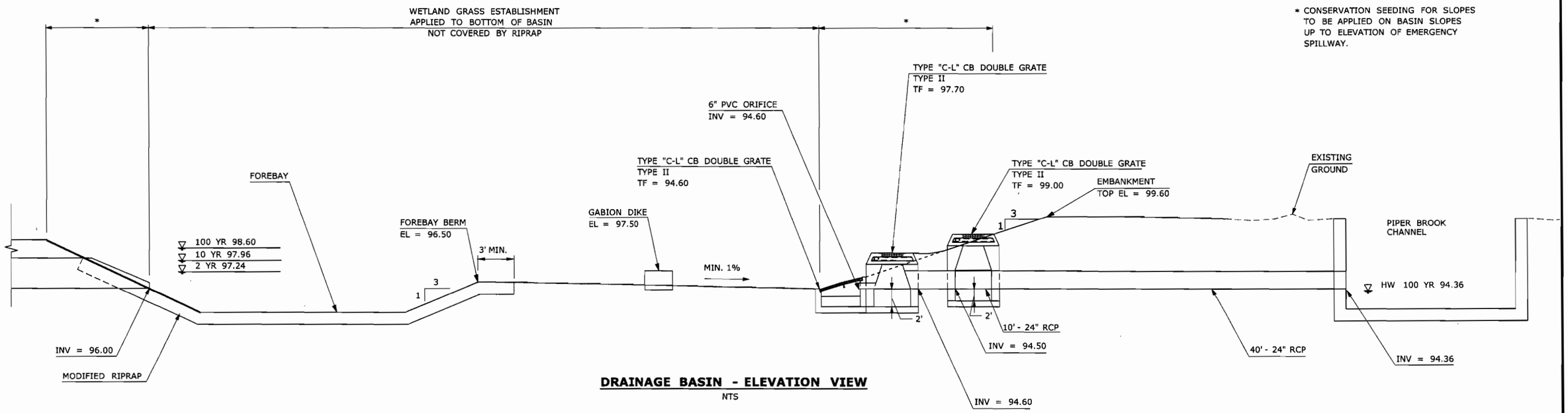

DRAINAGE BASIN - ELEVATION VIEW

NTS

NOTES:

1. 6" PVC ORIFICE INCLUDED IN UNIT PRICE FOR TYPE "C-B" CATCH BASIN D.G. TYPE I.
2. ALL EXCAVATED SOIL TO BE RE-USED SHALL BE FREE OF INVASIVE SPECIES.

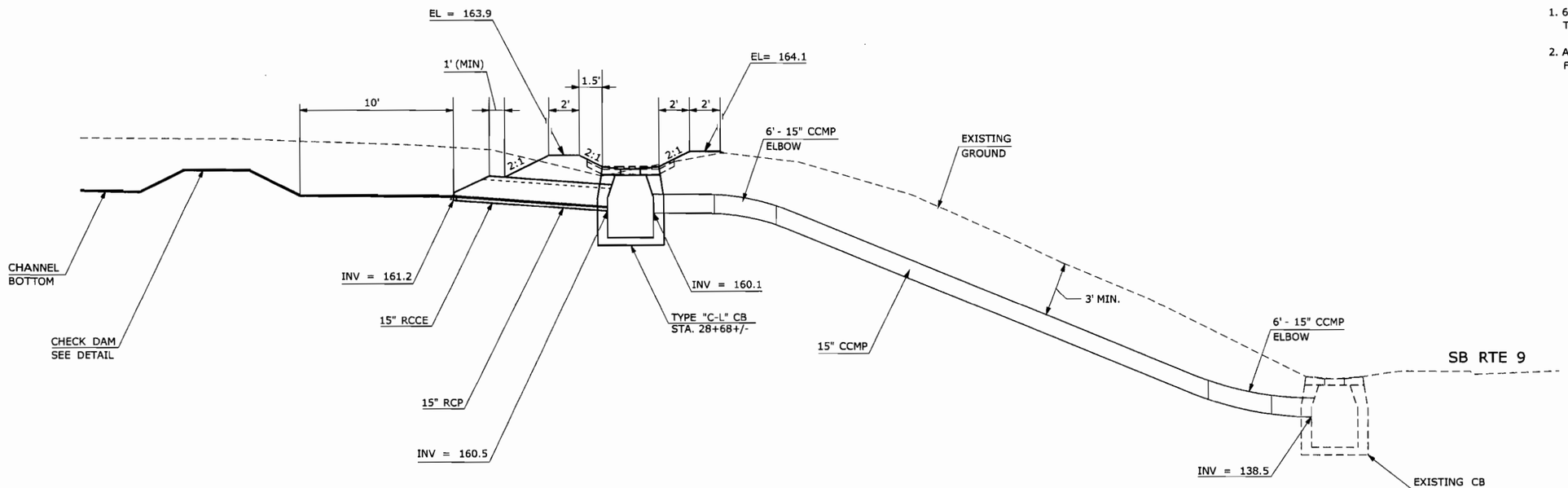

DRAINAGE DETAIL - STA. 29+00+/-

NTS

FINAL DESIGN REVIEW

REV.	DATE	REVISION DESCRIPTION	SHEET NO.
-	-	-	-
-	-	-	-
-	-	-	-
-	-	-	-
-	-	-	-
-	-	-	-

THE INFORMATION, INCLUDING ESTIMATED QUANTITIES OF WORK, SHOWN ON THESE SHEETS IS BASED ON LIMITED INVESTIGATIONS BY THE STATE AND IS IN NO WAY WARRANTED TO INDICATE THE CONDITIONS OF ACTUAL QUANTITIES OF WORK WHICH WILL BE REQUIRED.

Plotted: 7/28/2010

DESIGNER/DRAFTER: D. SHI
CHECKED BY: T. WALB
NTS

STATE OF CONNECTICUT
DEPARTMENT OF TRANSPORTATION

Filename: P:\General\Outgoing\ConnDOT\2010..0727-DEP Permit\HW..MSH..088..H035..DRG-22.dgn

SIGNATURE/BLOCK: URS CORPORATION AES
APPROVED BY: -
DATE: -

PROJECT TITLE: NEW BRITAIN - HARTFORD BUSWAY

TOWN: NEW BRITAIN

DRAWING TITLE: MISCELLANEOUS DETAILS DRAINAGE BASIN ELEVATION

PROJECT NO. 88-H035
DRAWING NO. DRG-22
SHEET NO. S

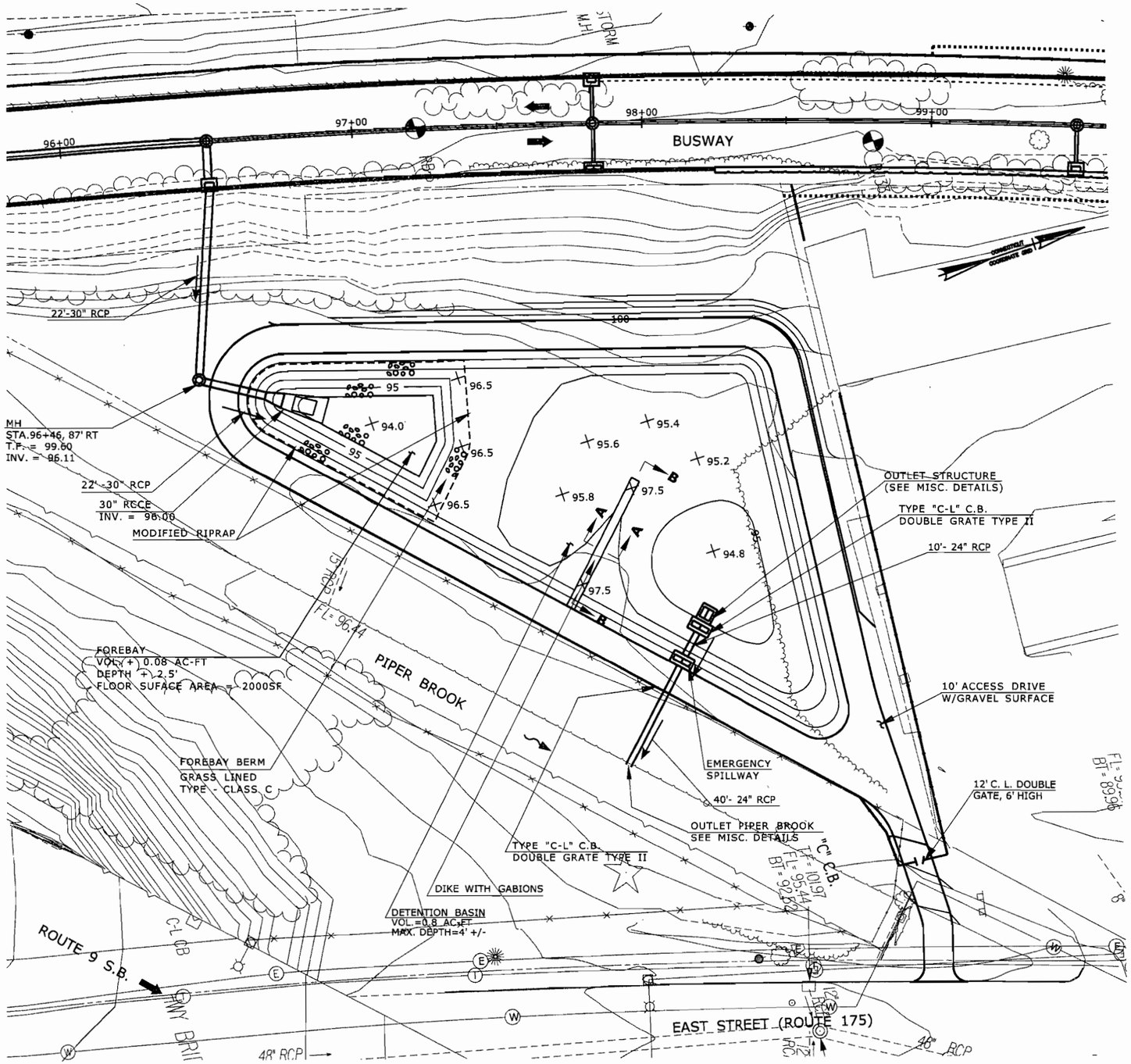

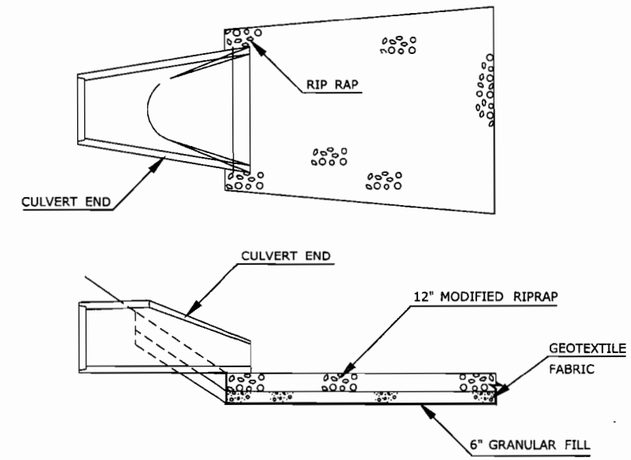

MODIFIED RIPRAP

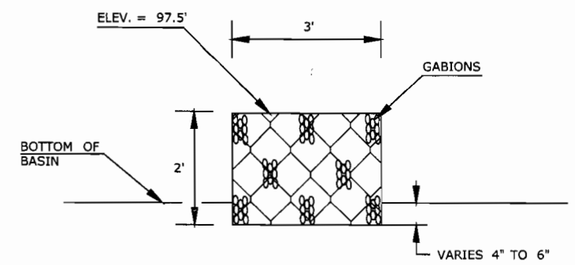

SECTION A-A

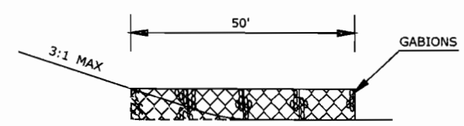

SECTION B-B

DIKE WITH GABIONS DETAIL

FINAL DESIGN REVIEW

REV.	DATE	REVISION DESCRIPTION	SHEET NO.
-	-	-	-
-	-	-	-
-	-	-	-
-	-	-	-
-	-	-	-
-	-	-	-

THE INFORMATION, INCLUDING ESTIMATED QUANTITIES OF WORK, SHOWN ON THESE SHEETS IS BASED ON LIMITED INVESTIGATIONS BY THE STATE AND IS IN NO WAY WARRANTED TO INDICATE THE CONDITIONS OF ACTUAL QUANTITIES OF WORK WHICH WILL BE REQUIRED.

Plotted: 7/28/2010

DESIGNER/DRAFTER: D. SHI
CHECKED BY: T. WALB
NTS

STATE OF CONNECTICUT
DEPARTMENT OF TRANSPORTATION

Filename: P:\General\Outgoing\ConnDOT\2010_0727-DEP Permit\HW_MSH_088_H035_DRG23.dgn

SIGNATURE/ BLOCK: URS CORPORATION AES
APPROVED BY: -
DATE: -

PROJECT TITLE: NEW BRITAIN - HARTFORD BUSWAY

TOWN: NEW BRITAIN

DRAWING TITLE: MISCELLANEOUS DETAILS DRAINAGE BASIN

PROJECT NO. 88-H035
DRAWING NO. DRG-23
SHEET NO. S

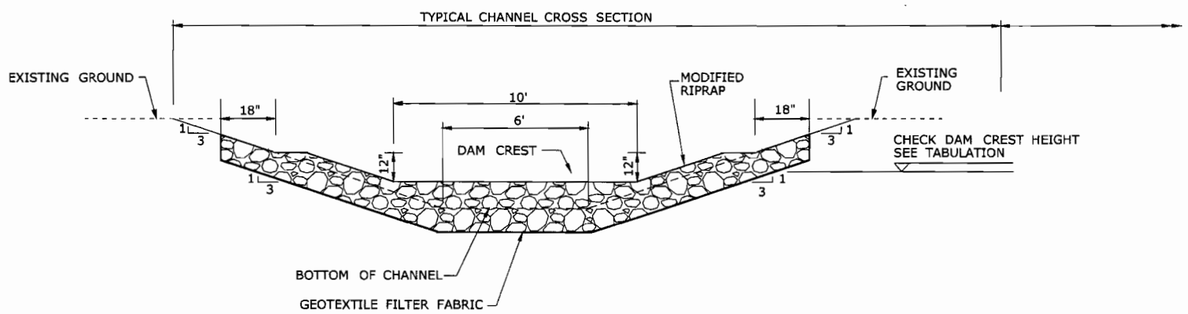

CROSS SECTION OF GRASS CHANNEL

(FROM STA. 22+50 TO STA. 28+50)

STONE CHECK DAM TABULATION	
LOCATION	CREST HEIGHT
STA. 24+00, LT	0.8'
STA. 26+00, LT	1.2'
STA. 28+50, LT	1.5'

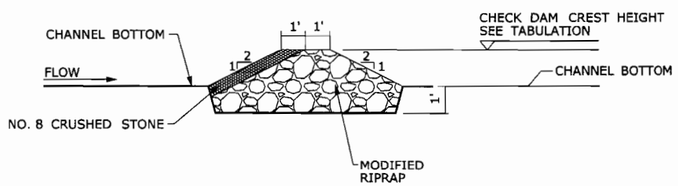

STONE PROFILE AT CHECK DAM

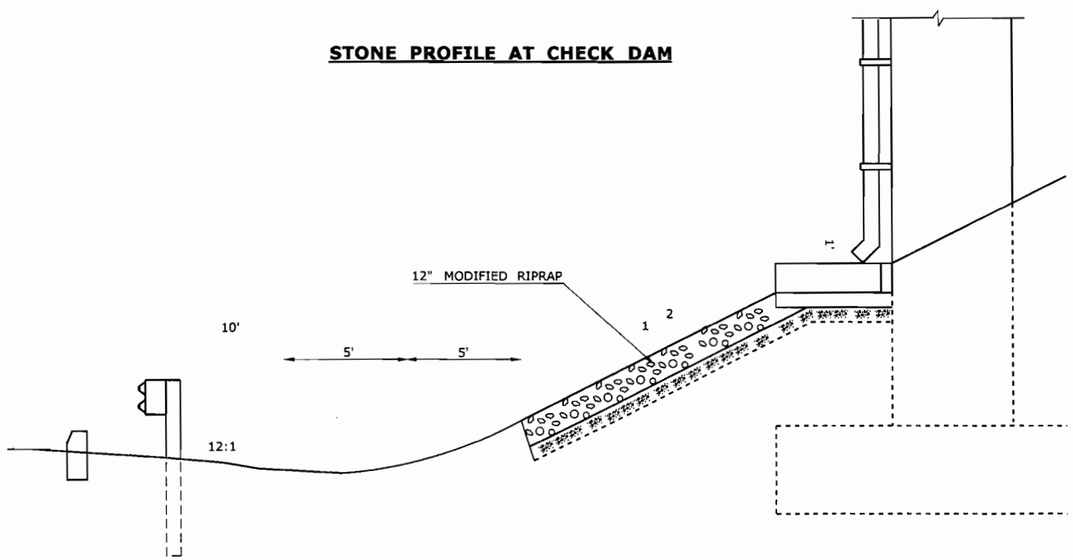

DOWNSPOUT OUTLET PROTECTION

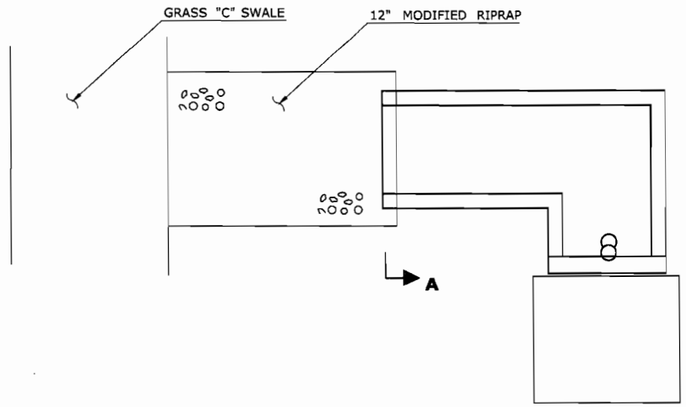

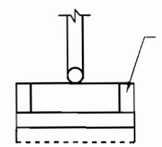

SECTION A-A

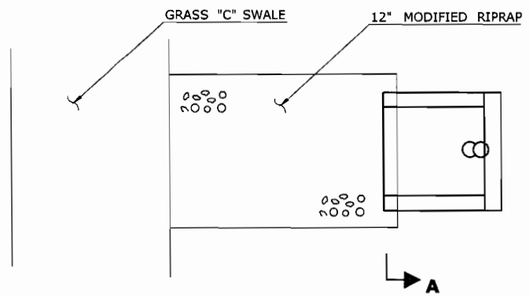

DOWNSPOUT SPLASH PAD

FINAL DESIGN REVIEW

REV.	DATE	REVISION DESCRIPTION	SHEET NO.
-	-	-	-
-	-	-	-
-	-	-	-
-	-	-	-
-	-	-	-
-	-	-	-

THE INFORMATION, INCLUDING ESTIMATED QUANTITIES OF WORK, SHOWN ON THESE SHEETS IS BASED ON LIMITED INVESTIGATIONS BY THE STATE AND IS IN NO WAY WARRANTED TO INDICATE THE CONDITIONS OF ACTUAL QUANTITIES OF WORK WHICH WILL BE REQUIRED.

Plotted: 7/28/2010

DESIGNER/DRAFTER: D. SHI
CHECKED BY: T. WALB
NTS

STATE OF CONNECTICUT
DEPARTMENT OF TRANSPORTATION

Filename: P:\General\Outgoing\ConnDOT\2010.0727-DEP Permit\H-W_MSH_088_H035_DRG-24.dgn

SIGNATURE/BLOCK: URS CORPORATION AES
APPROVED BY: -
DATE: -

PROJECT TITLE: NEW BRITAIN - HARTFORD BUSWAY

TOWN: NEW BRITAIN

DRAWING TITLE: MISCELLANEOUS DETAILS DETAILS

PROJECT NO. 88-H035
DRAWING NO. DRG-24
SHEET NO. S

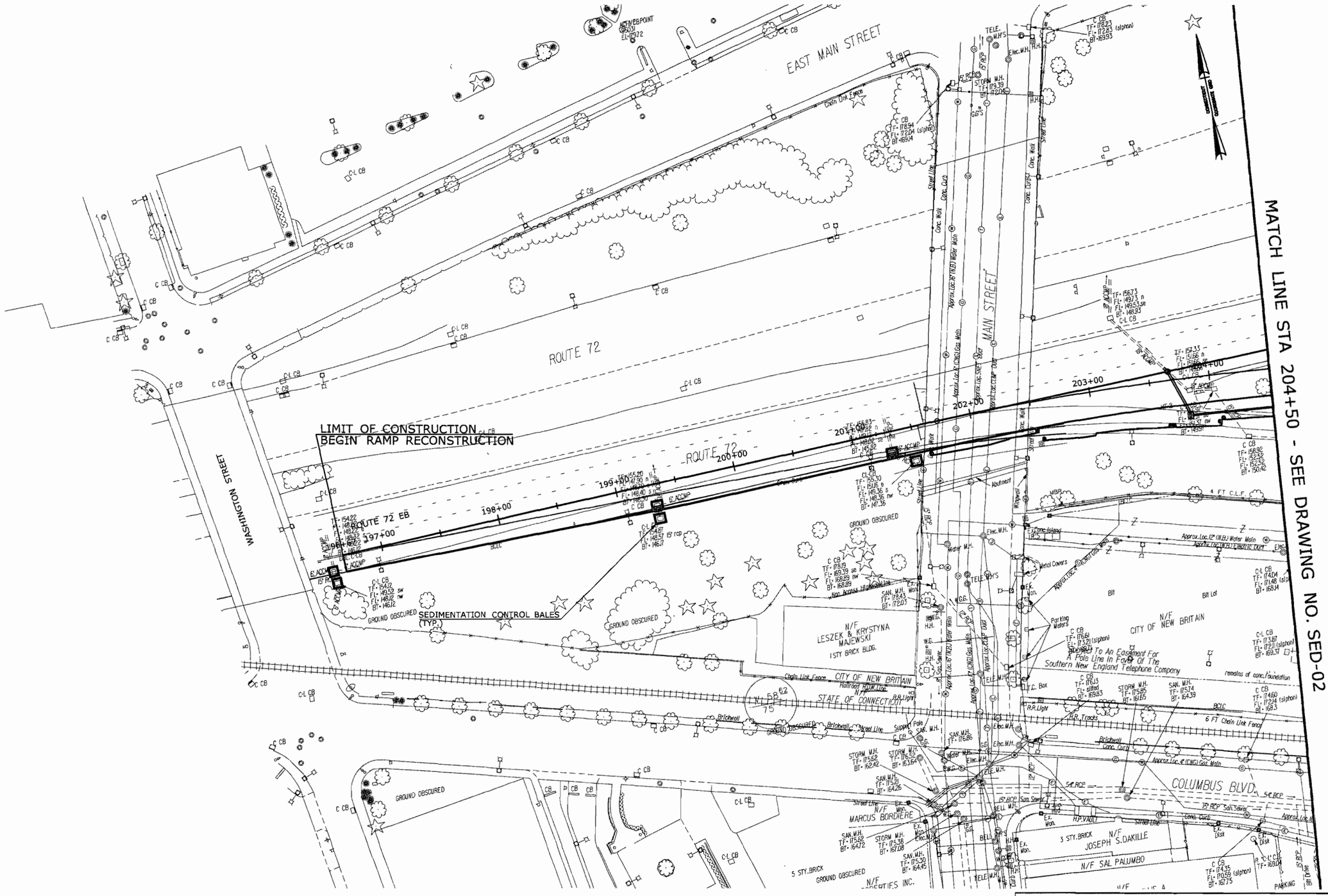

FINAL DESIGN REVIEW

REV.	DATE	REVISION DESCRIPTION	SHEET NO.
-	-	-	-
-	-	-	-
-	-	-	-
-	-	-	-
-	-	-	-
-	-	-	-
-	-	-	-

THE INFORMATION, INCLUDING ESTIMATED QUANTITIES OF WORK, SHOWN ON THESE SHEETS IS BASED ON LIMITED INVESTIGATIONS BY THE STATE AND IS IN NO WAY WARRANTED TO INDICATE THE CONDITIONS OF ACTUAL QUANTITIES OF WORK WHICH WILL BE REQUIRED.

Plotted: 7/28/2010

DESIGNER/DRAFTER: P. GILKEY
CHECKED BY: T. WALB
SCALE IN FEET 0 40 80
SCALE 1"=40'

STATE OF CONNECTICUT
DEPARTMENT OF TRANSPORTATION

Filename: P:\General\Outgoing\ConnDOT\2010_0727-DEP Permit\Base-Data\HW_MSH_088_H035_SED-01.dgn

SIGNATURE/BLOCK: **URS CORPORATION AES**
APPROVED BY: - DATE: -

PROJECT TITLE: **NEW BRITAIN - HARTFORD BUSWAY**

TOWN: **NEW BRITAIN**

DRAWING TITLE: **SEDIMENTATION CONTROL PLAN**

PROJECT NO. **88-H035**
DRAWING NO. **SED-01**
SHEET NO. **S**

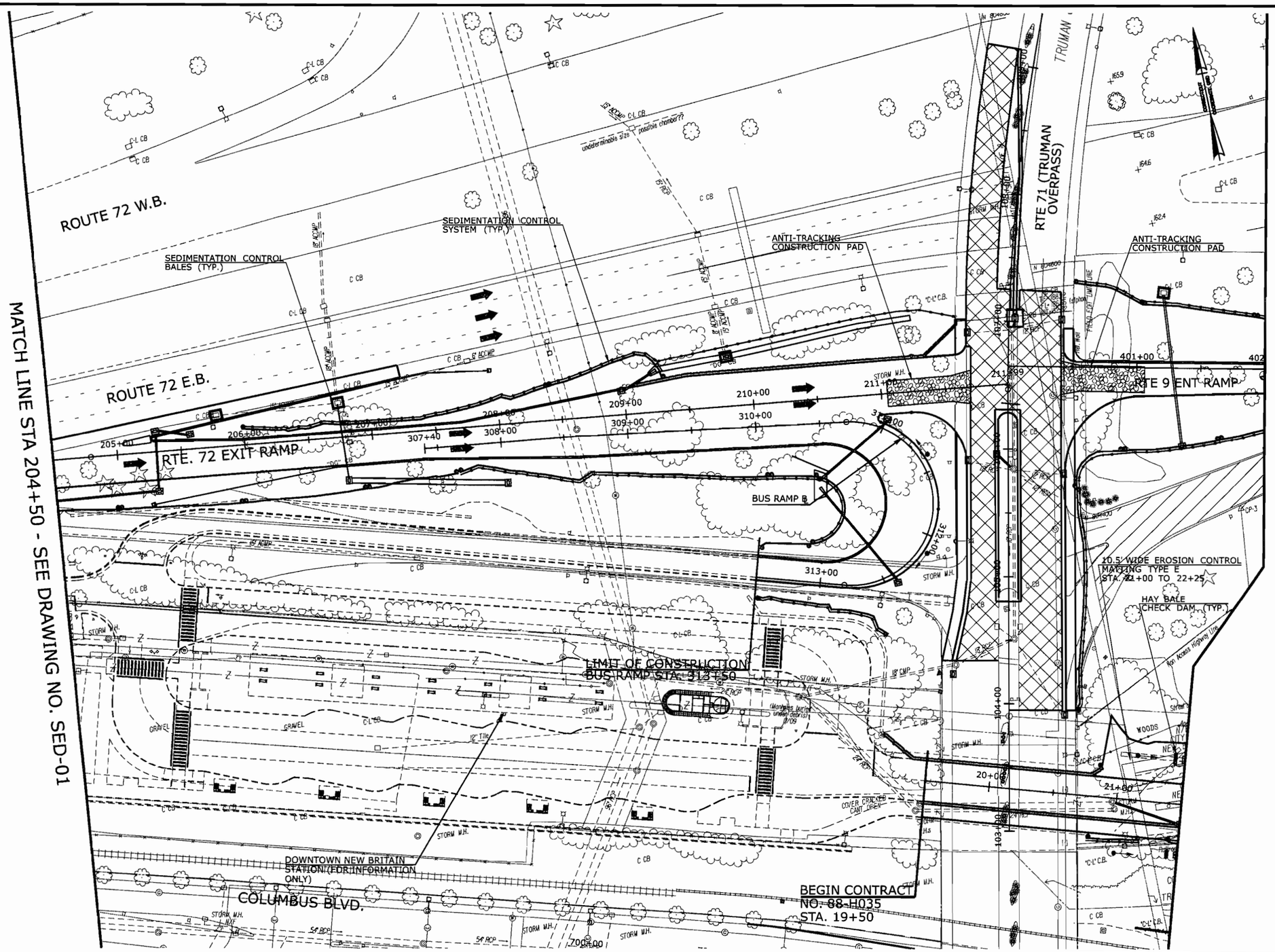

FINAL DESIGN REVIEW

REV.	DATE	REVISION DESCRIPTION	SHEET NO.
-	-	-	-
-	-	-	-
-	-	-	-
-	-	-	-
-	-	-	-
-	-	-	-

THE INFORMATION, INCLUDING ESTIMATED QUANTITIES OF WORK, SHOWN ON THESE SHEETS IS BASED ON LIMITED INVESTIGATIONS BY THE STATE AND IS IN NO WAY WARRANTED TO INDICATE THE CONDITIONS OF ACTUAL QUANTITIES OF WORK WHICH WILL BE REQUIRED.

Plotted: 7/28/2010

DESIGNER/DRAFTER: P. GILKEY
CHECKED BY: T. WALB
SCALE IN FEET 0 40 80
SCALE 1"=40'

STATE OF CONNECTICUT
DEPARTMENT OF TRANSPORTATION

SIGNATURE/BLOCK: **URS CORPORATION AES**
APPROVED BY: -
DATE: -

Filename: P:\General\Outgoing\ConnDOT\2010_0727-DEP Permit\Base-Data\HW_MSH_088_H035_SED-02.dgn

PROJECT TITLE: **NEW BRITAIN - HARTFORD BUSWAY**

TOWN: **NEW BRITAIN**

DRAWING TITLE: **SEDIMENTATION CONTROL PLAN**

PROJECT NO. **88-H035**
DRAWING NO. **SED-02**
SHEET NO. **S**

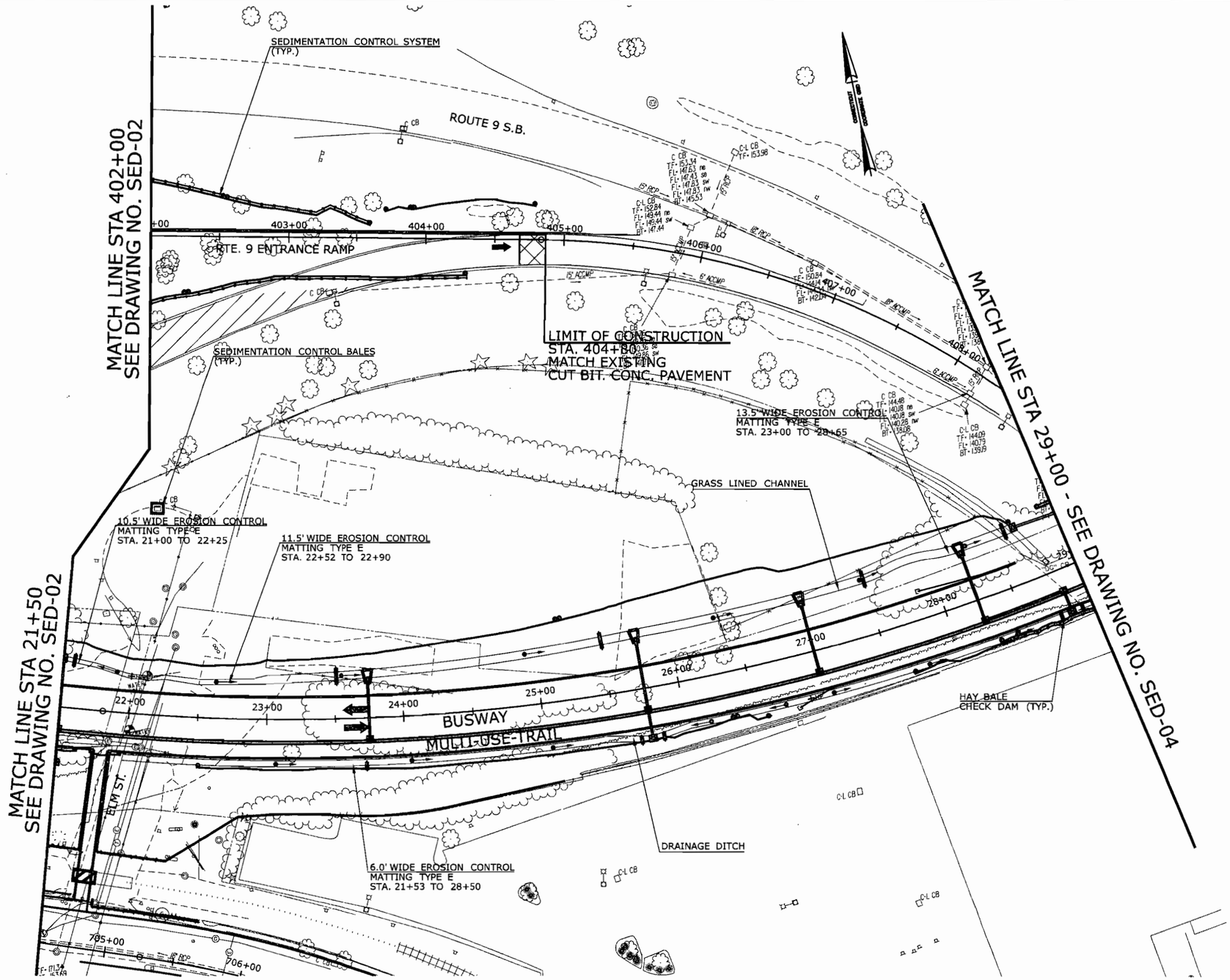

FINAL DESIGN REVIEW

REV.	DATE	REVISION DESCRIPTION	SHEET NO.
-	-	-	-
-	-	-	-
-	-	-	-
-	-	-	-
-	-	-	-
-	-	-	-

THE INFORMATION, INCLUDING ESTIMATED QUANTITIES OF WORK, SHOWN ON THESE SHEETS IS BASED ON LIMITED INVESTIGATIONS BY THE STATE AND IS IN NO WAY WARRANTED TO INDICATE THE CONDITIONS OF ACTUAL QUANTITIES OF WORK WHICH WILL BE REQUIRED.

Plotted: 7/28/2010

DESIGNER/DRAFTER: P. GILKEY
CHECKED BY: T. WALB
SCALE IN FEET: 0 40 80
SCALE 1"=40'

STATE OF CONNECTICUT
DEPARTMENT OF TRANSPORTATION

Filename: P:\General\Outgoing\ConnDOT\2010_0727-DEP Permit\Base-Data\HW_MSH_088_H035_SED-03.dgn

SIGNATURE/BLOCK: URS CORPORATION AES
APPROVED BY: -
DATE: -

PROJECT TITLE: NEW BRITAIN - HARTFORD BUSWAY

TOWN: NEW BRITAIN

DRAWING TITLE: SEDIMENTATION CONTROL PLAN

PROJECT NO. 88-H035
DRAWING NO. SED-03
SHEET NO. S

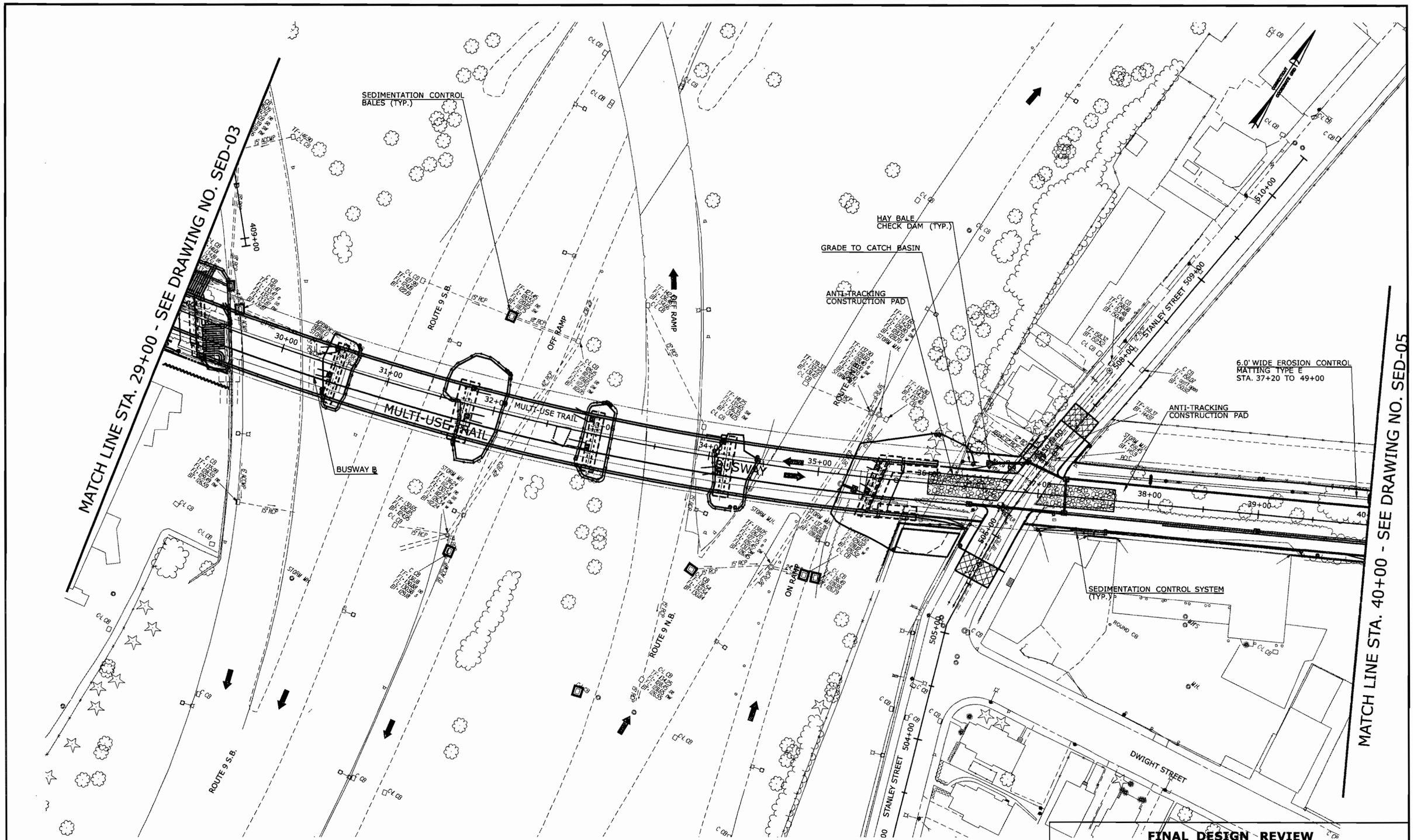

REV.	DATE	REVISION DESCRIPTION	SHEET NO.
-	-	-	-
-	-	-	-
-	-	-	-
-	-	-	-
-	-	-	-
-	-	-	-

THE INFORMATION, INCLUDING ESTIMATED QUANTITIES OF WORK, SHOWN ON THESE SHEETS IS BASED ON LIMITED INVESTIGATIONS BY THE STATE AND IS IN NO WAY WARRANTED TO INDICATE THE CONDITIONS OF ACTUAL QUANTITIES OF WORK WHICH WILL BE REQUIRED.

Plotted: 7/28/2010

DESIGNER/DRAFTER: P. GILKEY
CHECKED BY: T. WALB
SCALE IN FEET 0 40 80
SCALE 1"=40'

STATE OF CONNECTICUT
DEPARTMENT OF TRANSPORTATION

Filename: P:\General\Outgoing\ConnDOT\2010_0727-DEP Permit\Base-Data\HW_MSH_088_H035_SED-04.dgn

SIGNATURE/BLOCK: URS CORPORATION AES
APPROVED BY: -
DATE: -

PROJECT TITLE: NEW BRITAIN - HARTFORD BUSWAY

TOWN: NEW BRITAIN
DRAWING TITLE: SEDIMENTATION CONTROL PLAN

PROJECT NO. 88-H035
DRAWING NO. SED-04
SHEET NO. S

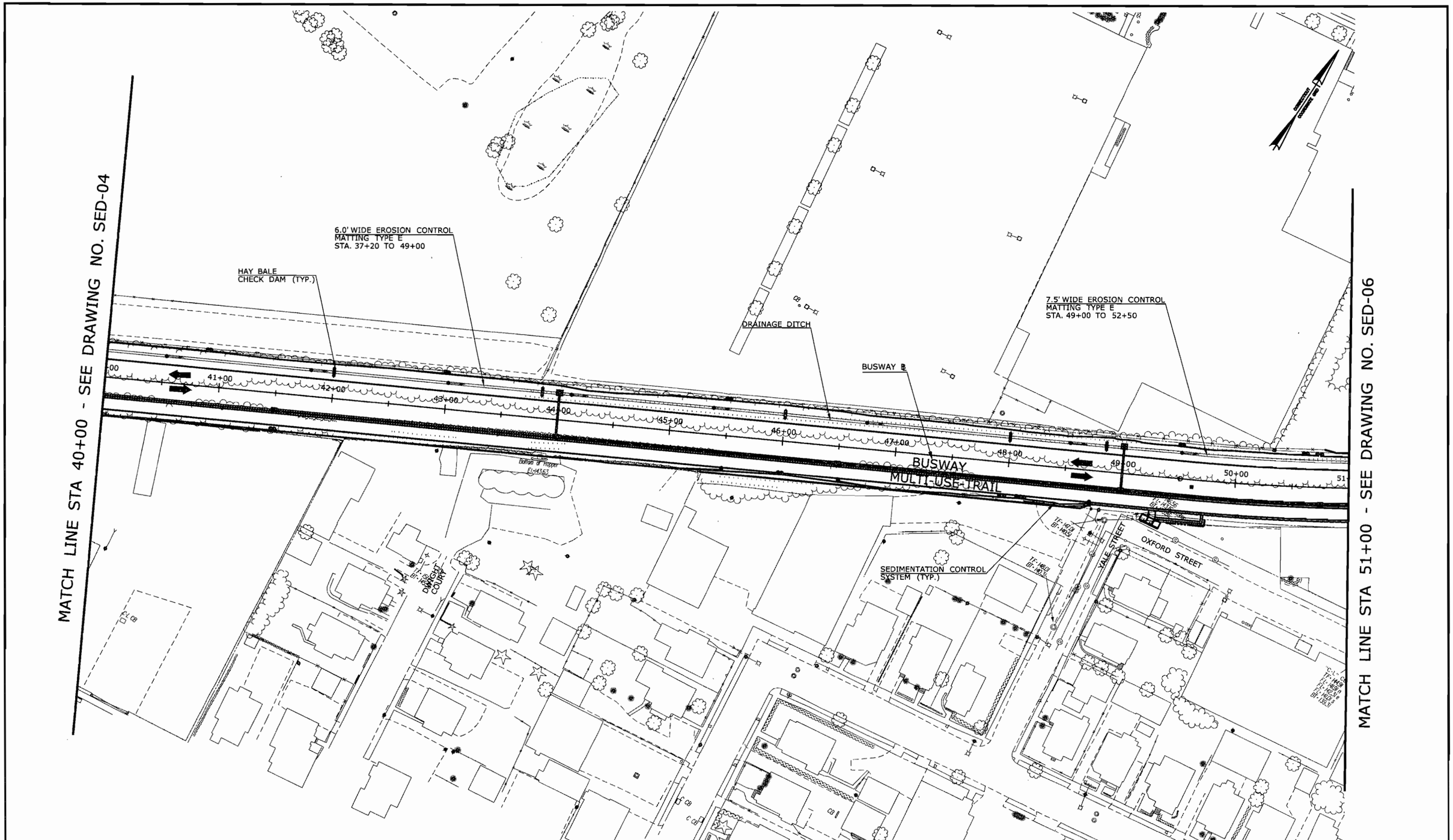

FINAL DESIGN REVIEW

REV.	DATE	REVISION DESCRIPTION	SHEET NO.
-	-	-	-
-	-	-	-
-	-	-	-
-	-	-	-
-	-	-	-
-	-	-	-

THE INFORMATION, INCLUDING ESTIMATED QUANTITIES OF WORK, SHOWN ON THESE SHEETS IS BASED ON LIMITED INVESTIGATIONS BY THE STATE AND IS IN NO WAY WARRANTED TO INDICATE THE CONDITIONS OF ACTUAL QUANTITIES OF WORK WHICH WILL BE REQUIRED.

Plotted: 7/28/2010

DESIGNER/DRAFTER: P. GILKEY
CHECKED BY: T. WALB
SCALE IN FEET 0 40 80
SCALE 1"=40'

STATE OF CONNECTICUT
DEPARTMENT OF TRANSPORTATION

Filename: P:\General\Outgoing\ConnDOT\2010_0727-DEP Permit\Base-Data\HW_MSH_088_H035_SED-05.dgn

SIGNATURE/BLOCK: URS CORPORATION AES
APPROVED BY: -
DATE: -

PROJECT TITLE: NEW BRITAIN - HARTFORD BUSWAY

TOWN: NEW BRITAIN

DRAWING TITLE: SEDIMENTATION CONTROL PLAN

PROJECT NO. 88-H035
DRAWING NO. SED-05
SHEET NO. S

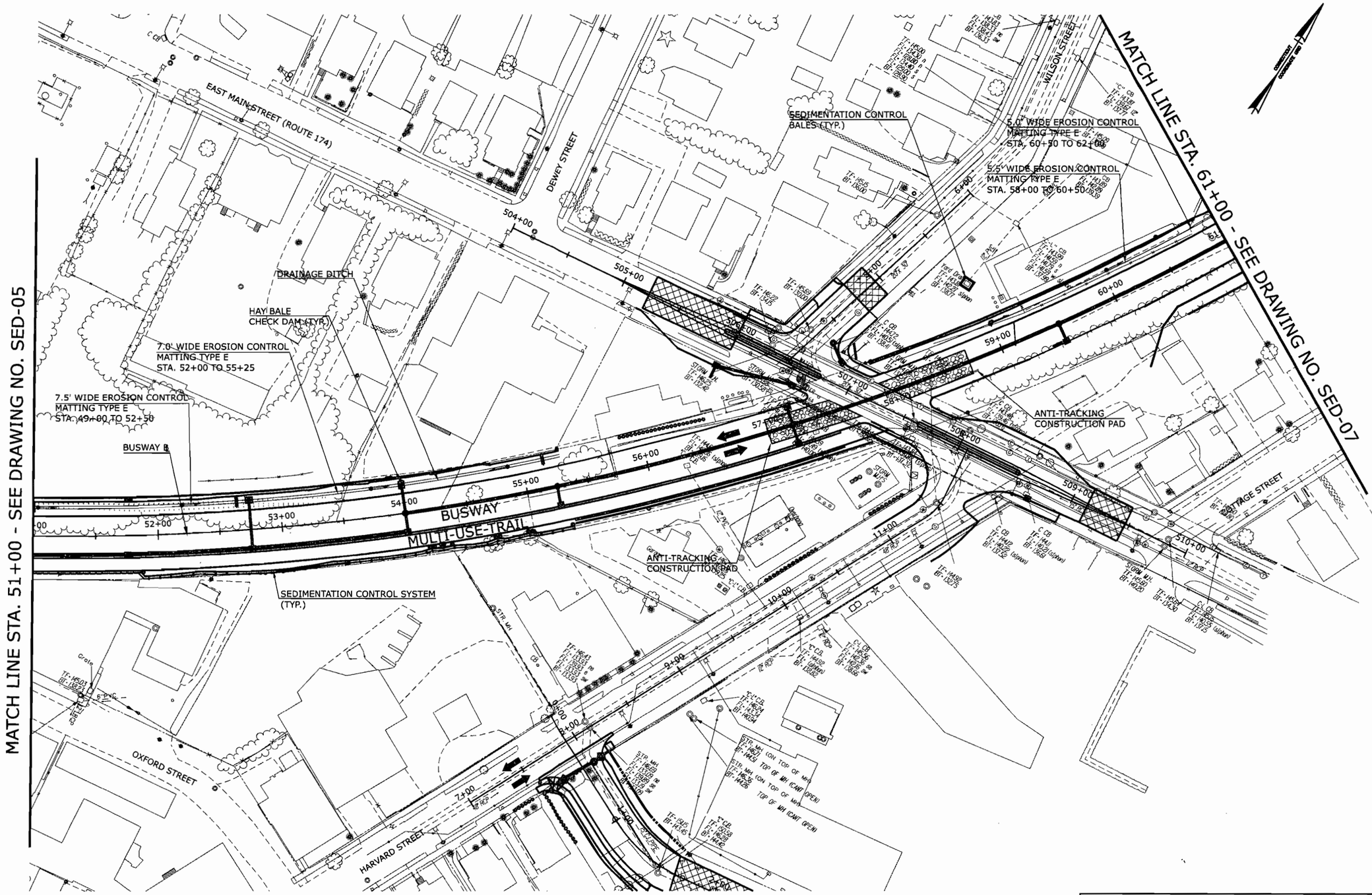

FINAL DESIGN REVIEW

REV.	DATE	REVISION DESCRIPTION	SHEET NO.
-	-	-	-
-	-	-	-
-	-	-	-
-	-	-	-
-	-	-	-
-	-	-	-
-	-	-	-

THE INFORMATION, INCLUDING ESTIMATED QUANTITIES OF WORK, SHOWN ON THESE SHEETS IS BASED ON LIMITED INVESTIGATIONS BY THE STATE AND IS IN NO WAY WARRANTED TO INDICATE THE CONDITIONS OF ACTUAL QUANTITIES OF WORK WHICH WILL BE REQUIRED.

Plotted: 7/28/2010

DESIGNER/DRAFTER: P. GILKEY
CHECKED BY: T. WALB
SCALE IN FEET 0 40 80
SCALE 1"=40'

STATE OF CONNECTICUT
DEPARTMENT OF TRANSPORTATION

Filename: P:\General\Outgoing\ConnDOT\2010.0727-DEP Permit\Base-Data\HW_MSH_088-H035_SED-06.dgn

SIGNATURE/BLOCK: URS CORPORATION AES
APPROVED BY: -
DATE: -

PROJECT TITLE: NEW BRITAIN - HARTFORD BUSWAY

TOWN: NEW BRITAIN

DRAWING TITLE: SEDIMENTATION CONTROL PLAN

PROJECT NO. 88-H035
DRAWING NO. SED-06
SHEET NO. S

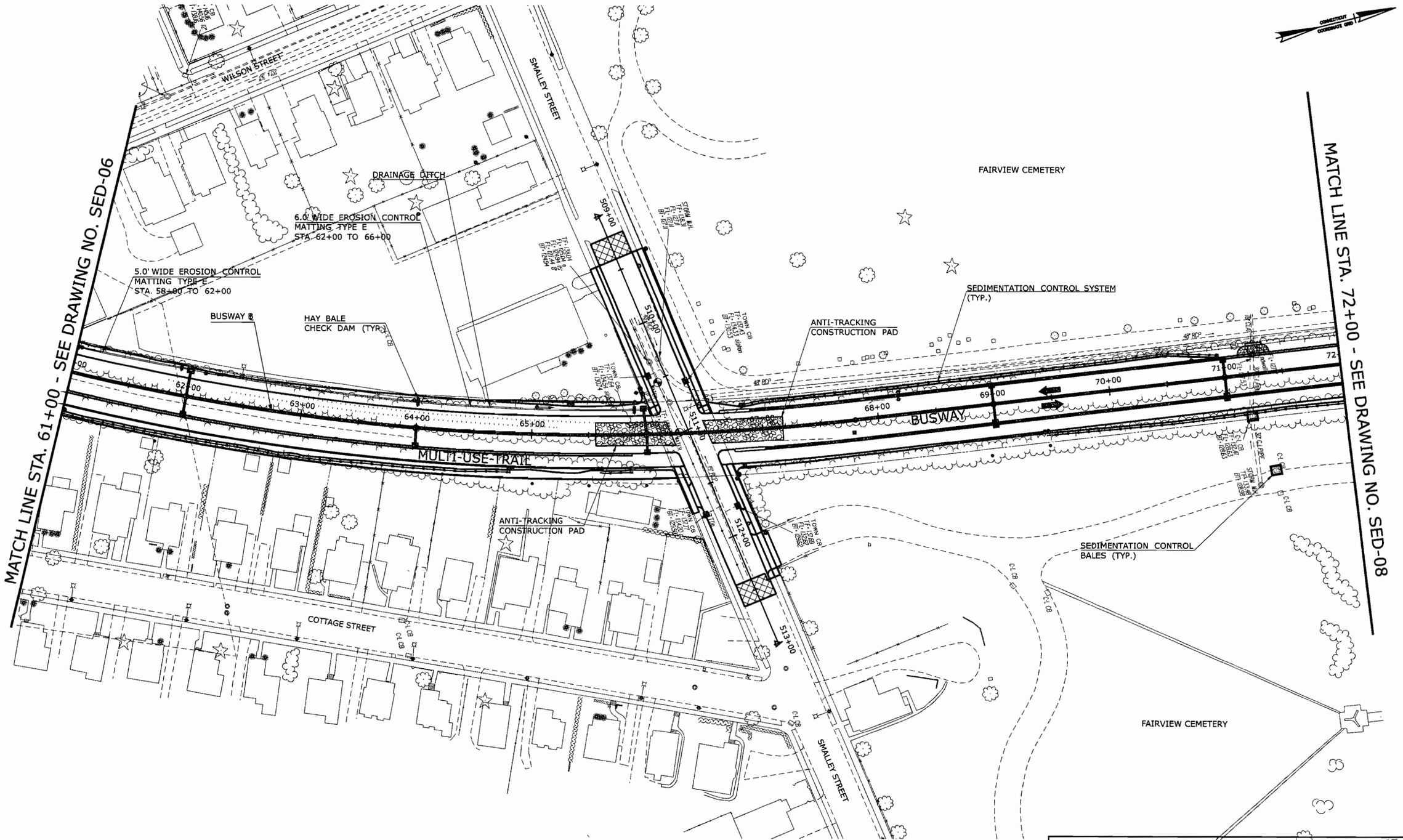

FINAL DESIGN REVIEW

REV.	DATE	REVISION DESCRIPTION	SHEET NO.
-	-	-	-
-	-	-	-
-	-	-	-
-	-	-	-
-	-	-	-
-	-	-	-

THE INFORMATION, INCLUDING ESTIMATED QUANTITIES OF WORK, SHOWN ON THESE SHEETS IS BASED ON LIMITED INVESTIGATIONS BY THE STATE AND IS IN NO WAY WARRANTED TO INDICATE THE CONDITIONS OF ACTUAL QUANTITIES OF WORK WHICH WILL BE REQUIRED.

Plotted: 7/28/2010

DESIGNER/DRAFTER: P. GILKEY
CHECKED BY: T. WALB
SCALE IN FEET 0 40 80
SCALE 1"=40'

STATE OF CONNECTICUT
DEPARTMENT OF TRANSPORTATION

Filename: P:\General\Outgoing\ConnDOT\2010_0727-DEP Permit\Base-Data\HW_MSH_088_H035_SED-07.dgn

SIGNATURE/BLOCK: URS CORPORATION AES
APPROVED BY: -
DATE: -

PROJECT TITLE: NEW BRITAIN - HARTFORD BUSWAY

TOWN: NEW BRITAIN

DRAWING TITLE: SEDIMENTATION CONTROL PLAN

PROJECT NO. 88-H035
DRAWING NO. SED-07
SHEET NO. S

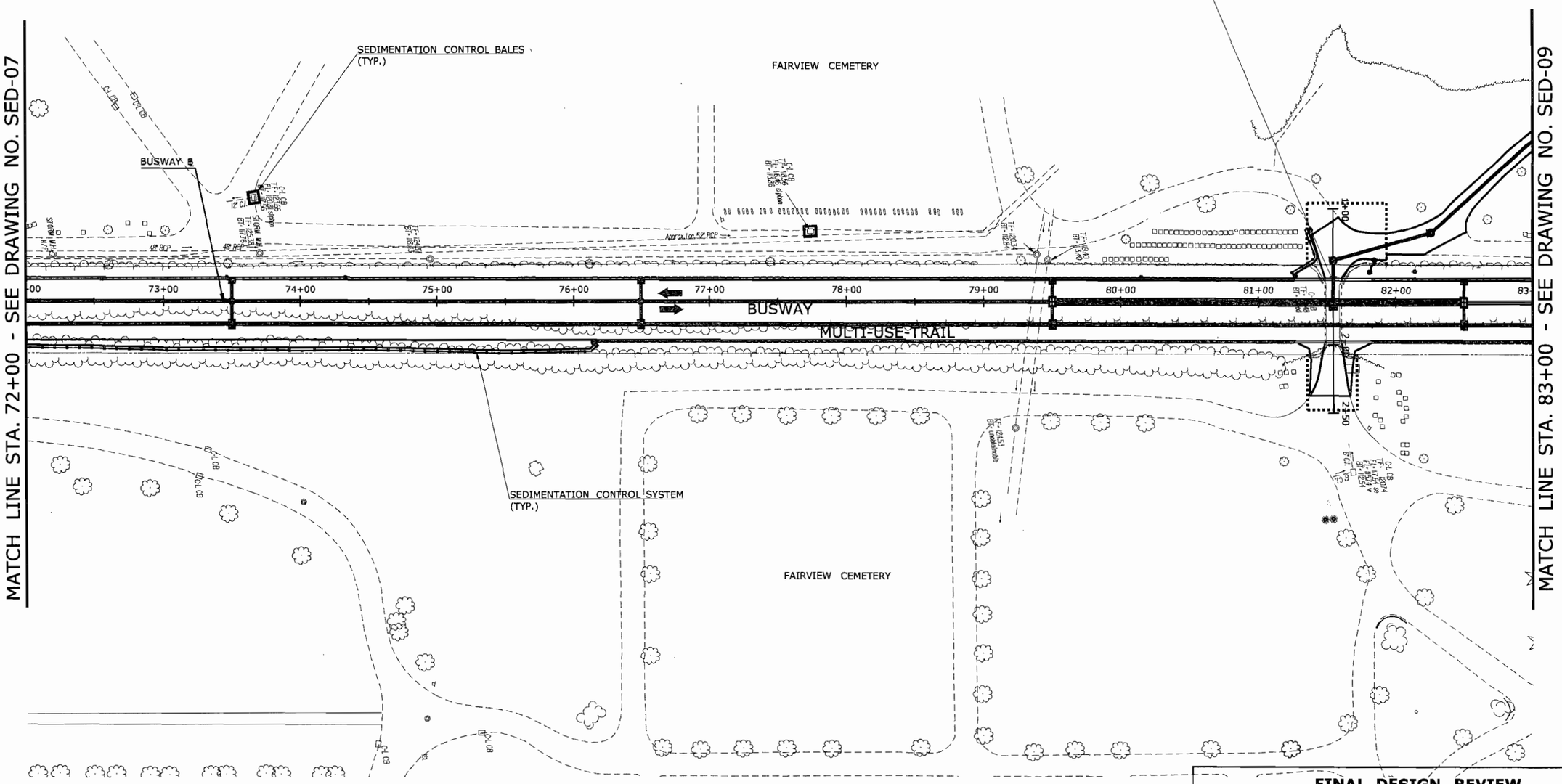

FINAL DESIGN REVIEW

REV.	DATE	REVISION DESCRIPTION	SHEET NO.
-	-	-	-
-	-	-	-
-	-	-	-
-	-	-	-
-	-	-	-
-	-	-	-

THE INFORMATION, INCLUDING ESTIMATED QUANTITIES OF WORK, SHOWN ON THESE SHEETS IS BASED ON LIMITED INVESTIGATIONS BY THE STATE AND IS IN NO WAY WARRANTED TO INDICATE THE CONDITIONS OF ACTUAL QUANTITIES OF WORK WHICH WILL BE REQUIRED.

Plotted: 7/28/2010

DESIGNER/DRAFTER: P. GILKEY
CHECKED BY: T. WALB
SCALE IN FEET 0 40 80
SCALE 1"=40'

STATE OF CONNECTICUT
DEPARTMENT OF TRANSPORTATION

Filename: P:\General\Outgoing\ConnDOT\2010_0727-DEP Permit\Base-Data\HW_MSH_088_H035_SED-08.dgn

SIGNATURE/BLOCK: URS CORPORATION AES
APPROVED BY: - DATE: -

PROJECT TITLE: NEW BRITAIN - HARTFORD BUSWAY

TOWN: NEW BRITAIN

DRAWING TITLE: SEDIMENTATION CONTROL PLAN

PROJECT NO. 88-H035
DRAWING NO. SED-08
SHEET NO. S

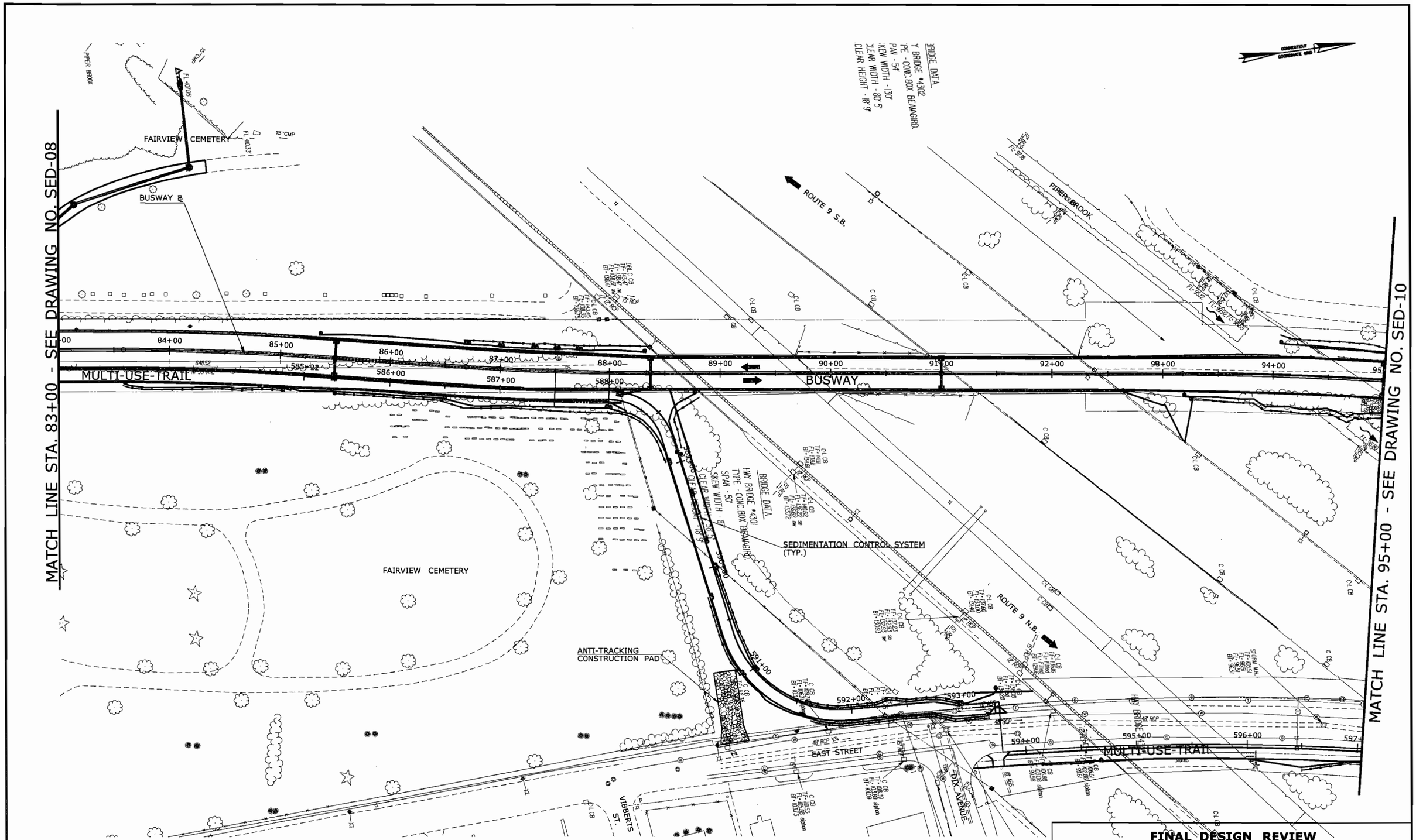

REV.	DATE	REVISION DESCRIPTION	SHEET NO.
-	-	-	-
-	-	-	-
-	-	-	-
-	-	-	-
-	-	-	-
-	-	-	-
-	-	-	-

THE INFORMATION, INCLUDING ESTIMATED QUANTITIES OF WORK, SHOWN ON THESE SHEETS IS BASED ON LIMITED INVESTIGATIONS BY THE STATE AND IS IN NO WAY WARRANTED TO INDICATE THE CONDITIONS OF ACTUAL QUANTITIES OF WORK WHICH WILL BE REQUIRED.

Plotted: 7/28/2010

DESIGNER/DRAFTER: P. GILKEY
CHECKED BY: T. WALB
SCALE IN FEET 0 40 80
SCALE 1"=40'

STATE OF CONNECTICUT
DEPARTMENT OF TRANSPORTATION

Filename: P:\General\Outgoing\ConnDOT\2010_0727-DEP Permit\Base-Data\HW_MSH_088_H035_SED-09.dgn

SIGNATURE/BLOCK: URS CORPORATION AES
APPROVED BY: -
DATE: -

PROJECT TITLE: NEW BRITAIN - HARTFORD BUSWAY

TOWN: NEW BRITAIN

DRAWING TITLE: SEDIMENTATION CONTROL PLAN

PROJECT NO. 88-H035
DRAWING NO. SED-09
SHEET NO. S

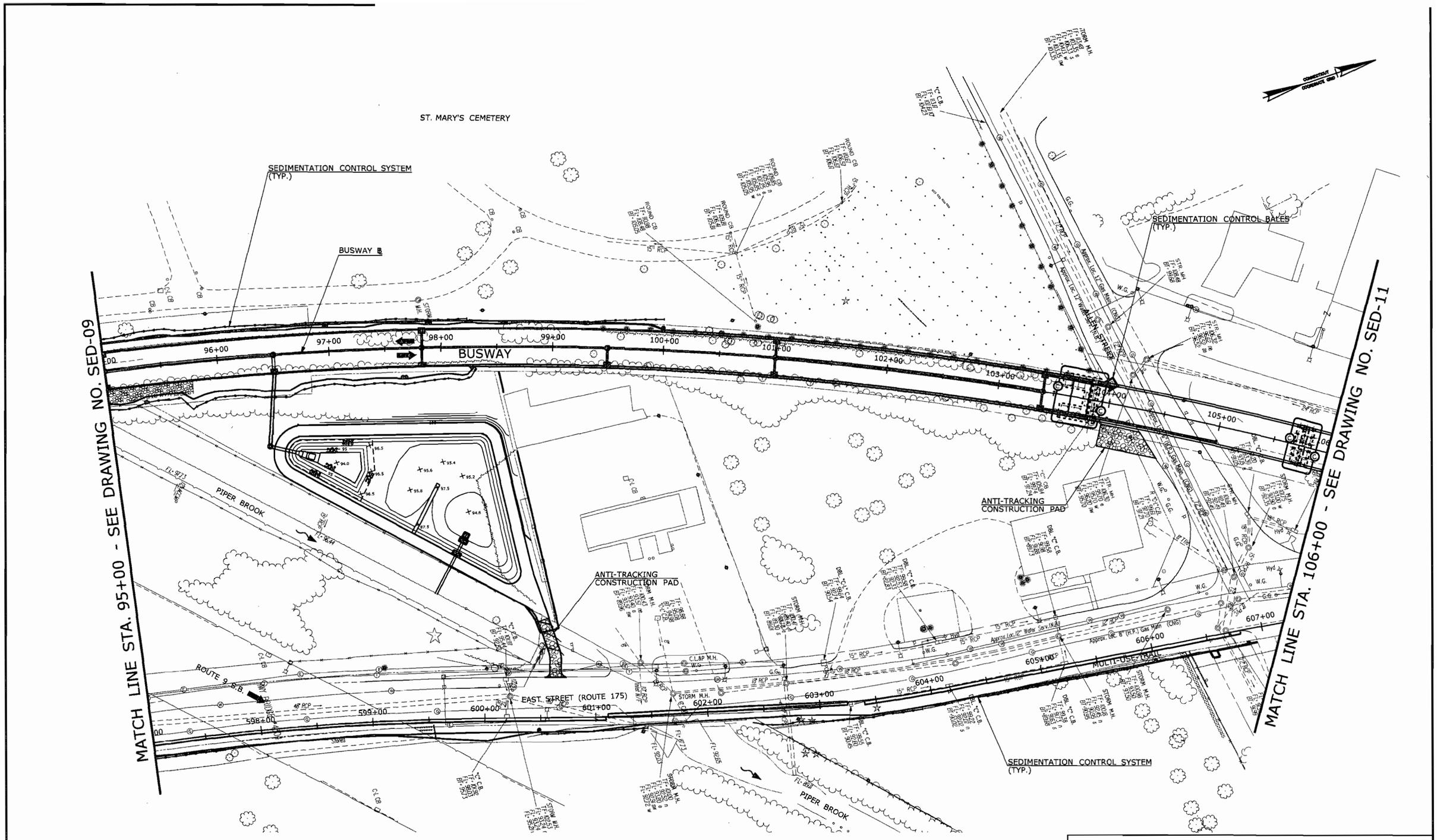

FINAL DESIGN REVIEW

REV.	DATE	REVISION DESCRIPTION	SHEET NO.
-	-	-	-
-	-	-	-
-	-	-	-
-	-	-	-
-	-	-	-
-	-	-	-
-	-	-	-

THE INFORMATION, INCLUDING ESTIMATED QUANTITIES OF WORK, SHOWN ON THESE SHEETS IS BASED ON LIMITED INVESTIGATIONS BY THE STATE AND IS IN NO WAY WARRANTED TO INDICATE THE CONDITIONS OF ACTUAL QUANTITIES OF WORK WHICH WILL BE REQUIRED.

Plotted: 7/28/2010

DESIGNER/DRAFTER: P. GILKEY
CHECKED BY: T. WALB
SCALE IN FEET 0 40 80
SCALE 1"=40'

STATE OF CONNECTICUT
DEPARTMENT OF TRANSPORTATION

Filename: P:\General\Outgoing\ConnDOT\2010_0727-DEP Permit\Base-Data\HW_MSH_088_H035_SED-10.dgn

SIGNATURE/BLOCK: URS CORPORATION AES
APPROVED BY: -
DATE: -

PROJECT TITLE: NEW BRITAIN - HARTFORD BUSWAY

TOWN: NEW BRITAIN

DRAWING TITLE: SEDIMENTATION CONTROL PLAN

PROJECT NO. 88-H035
DRAWING NO. SED-10
SHEET NO. S

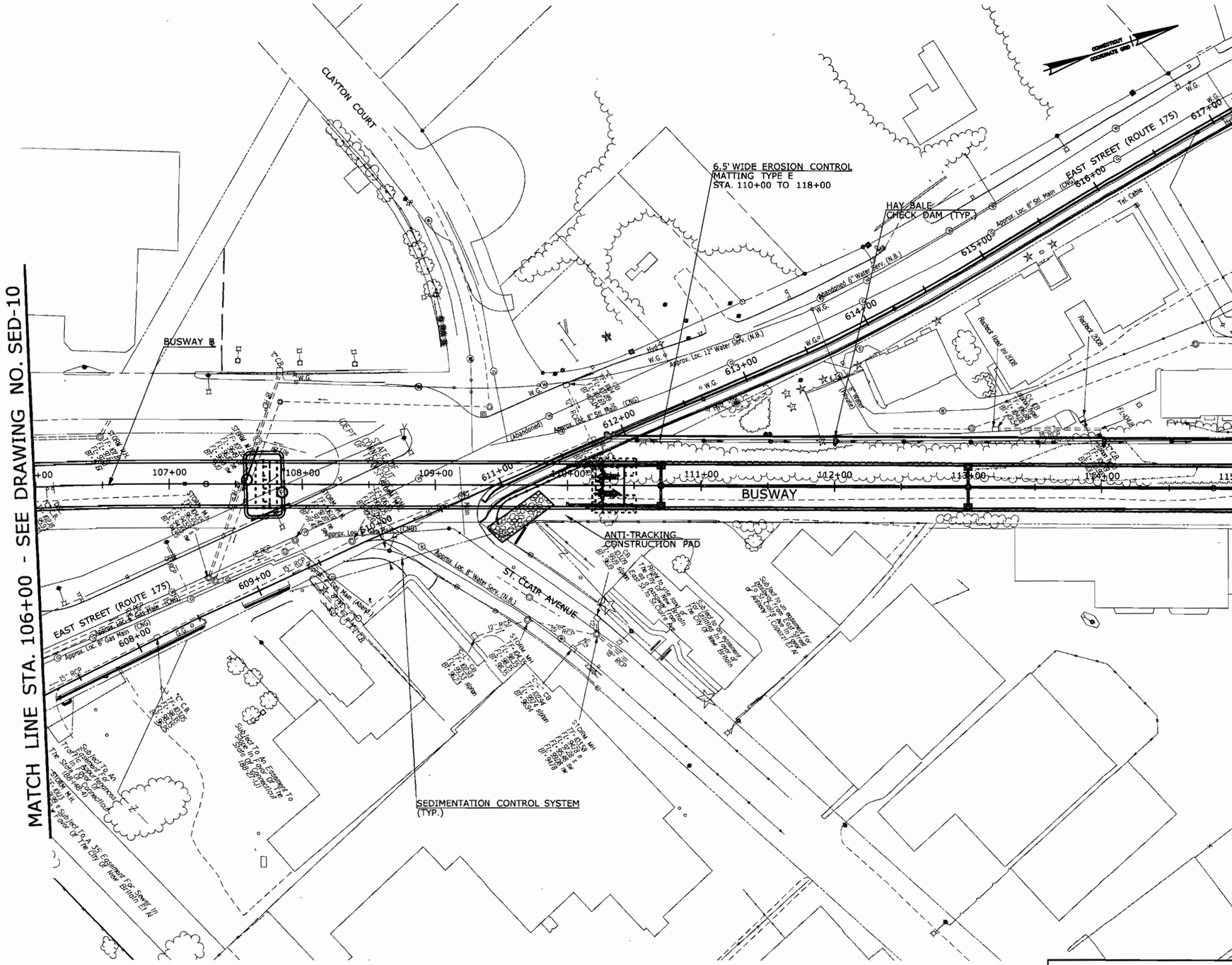

FINAL DESIGN REVIEW

REV.	DATE	REVISION DESCRIPTION	SHEET NO.
-	-	-	-
-	-	-	-
-	-	-	-
-	-	-	-
-	-	-	-
-	-	-	-

THE INFORMATION, INCLUDING ESTIMATED QUANTITIES OF WORK, SHOWN ON THESE SHEETS IS BASED ON LIMITED INVESTIGATIONS BY THE STATE AND IS IN NO WAY WARRANTED TO INDICATE THE CONDITIONS OF ACTUAL QUANTITIES OF WORK WHICH WILL BE REQUIRED.

Plotted: 7/28/2010

DESIGNER/DRAFTER: P. GILKEY
CHECKED BY: T. WALB
SCALE IN FEET 0 40 80
SCALE 1"=40'

STATE OF CONNECTICUT
DEPARTMENT OF TRANSPORTATION

Filename: P:\General\Outgoing\ConnDOT\2010_0727-DEP Permit\Base-Data\HW_MSH_088_H035_SED-11.dgn

SIGNATURE/BLOCK: URS CORPORATION AES
APPROVED BY: -
DATE: -

PROJECT TITLE: NEW BRITAIN - HARTFORD BUSWAY

TOWN: NEW BRITAIN

DRAWING TITLE: SEDIMENTATION CONTROL PLAN

PROJECT NO. 88-H035
DRAWING NO. SED-11
SHEET NO. S

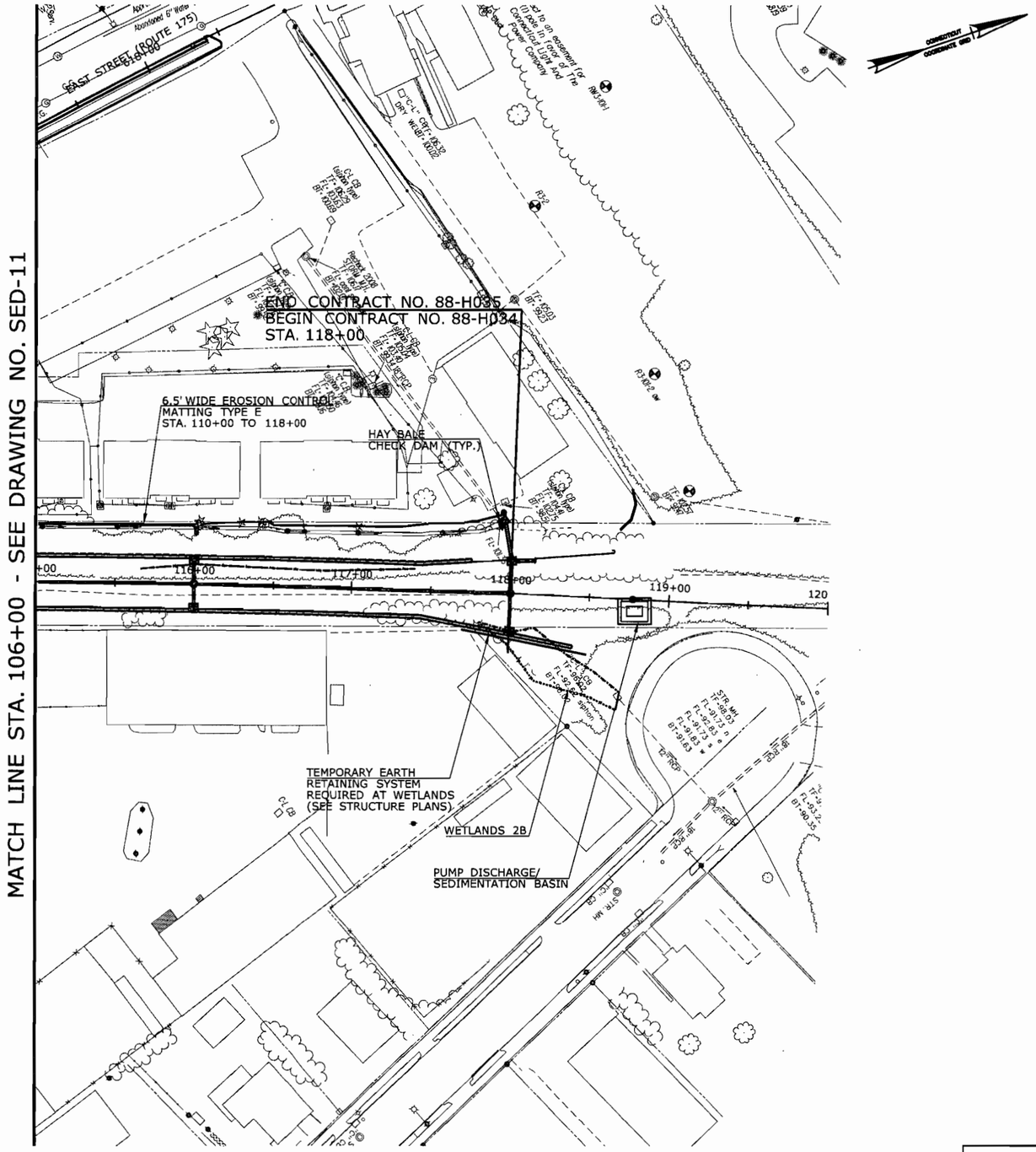

FINAL DESIGN REVIEW

REV.	DATE	REVISION DESCRIPTION	SHEET NO.
-	-	-	-
-	-	-	-
-	-	-	-
-	-	-	-
-	-	-	-
-	-	-	-

THE INFORMATION, INCLUDING ESTIMATED QUANTITIES OF WORK, SHOWN ON THESE SHEETS IS BASED ON LIMITED INVESTIGATIONS BY THE STATE AND IS IN NO WAY WARRANTED TO INDICATE THE CONDITIONS OF ACTUAL QUANTITIES OF WORK WHICH WILL BE REQUIRED.

Plotted: 7/28/2010

DESIGNER/DRAFTER: P. GILKEY
CHECKED BY: T. WALB
SCALE IN FEET 0 40 80
SCALE 1"=40'

STATE OF CONNECTICUT
DEPARTMENT OF TRANSPORTATION

Filename: P:\General\Outgoing\ConnDOT\2010.0727-DEP Permit\Base-Data\HW.MSH.088.H035.SED-12.dgn

SIGNATURE/ BLOCK: URS CORPORATION AES
APPROVED BY: -
DATE: -

PROJECT TITLE: NEW BRITAIN - HARTFORD BUSWAY

TOWN: NEW BRITAIN

DRAWING TITLE: SEDIMENTATION CONTROL PLAN

PROJECT NO. 88-H035
DRAWING NO. SED-12
SHEET NO. S

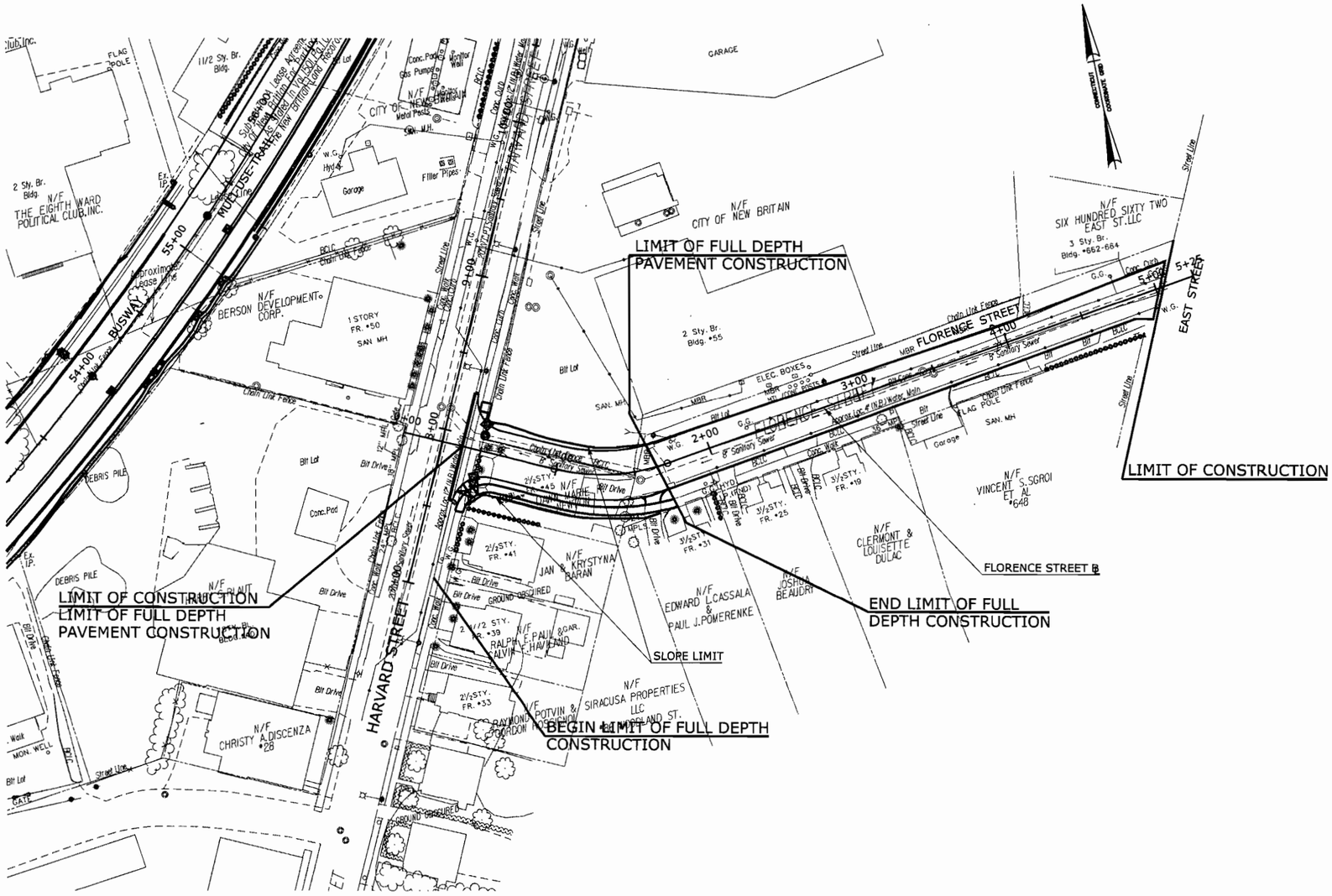

FINAL DESIGN REVIEW

REV.	DATE	REVISION DESCRIPTION	SHEET NO.
-	-	-	-
-	-	-	-
-	-	-	-
-	-	-	-
-	-	-	-
-	-	-	-

THE INFORMATION, INCLUDING ESTIMATED QUANTITIES OF WORK, SHOWN ON THESE SHEETS IS BASED ON LIMITED INVESTIGATIONS BY THE STATE AND IS IN NO WAY WARRANTED TO INDICATE THE CONDITIONS OF ACTUAL QUANTITIES OF WORK WHICH WILL BE REQUIRED.

Plotted: 7/28/2010

DESIGNER/DRAFTER: P. GILKEY
CHECKED BY: T. WALB
SCALE IN FEET: 0 40 80
SCALE 1"=40'

STATE OF CONNECTICUT
DEPARTMENT OF TRANSPORTATION

Filename: P:\General\Outgoing\ConnDOT\2010_0727-DEP Permit\Base-Data\HW_MSH_088_H035_SED-13.dgn

SIGNATURE/BLOCK: URS CORPORATION AES
APPROVED BY: -
DATE: -

PROJECT TITLE: NEW BRITAIN - HARTFORD BUSWAY

TOWN: NEW BRITAIN

DRAWING TITLE: SEDIMENTATION CONTROL PLAN

PROJECT NO. 88-H035
DRAWING NO. SED-13
SHEET NO. S

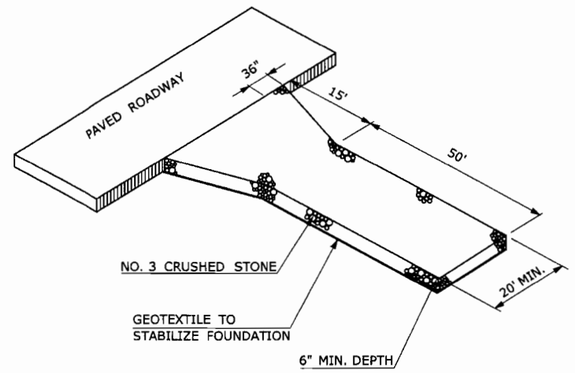

ANTI-TRACKING CONSTRUCTION PAD

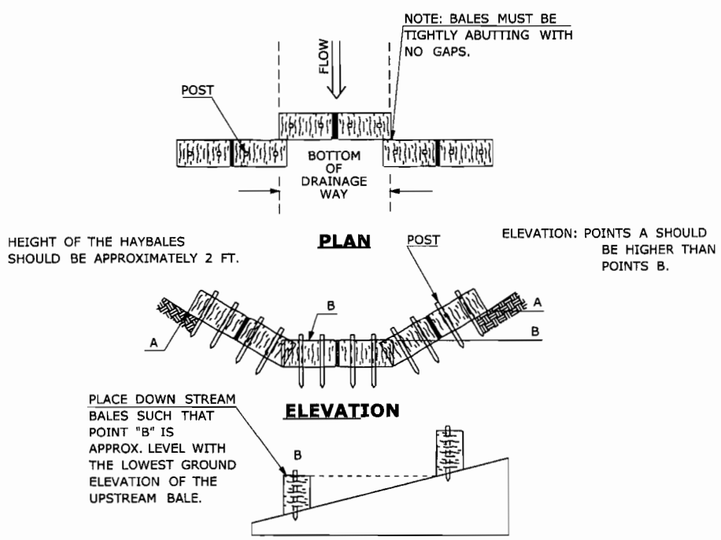

HAY BALE CHECK DAM FOR SEDIMENTATION CONTROL SYSTEM

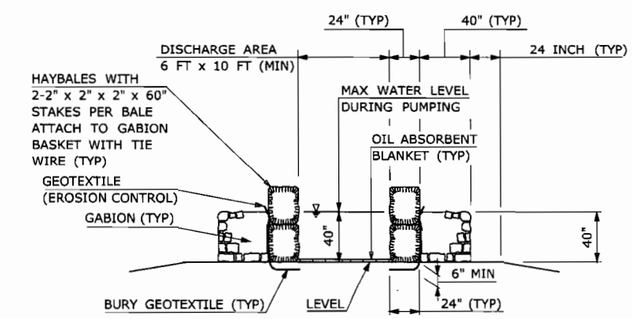

PUMP DISCHARGE / SEDIMENTATION BASIN DETAIL

NOTES:

1. AT THE COMPLETION OF THE WORK, THE GABIONS, GEOTEXTILE, OIL ABSORBENT BLANKET AND HAYBALES SHALL BE REMOVED FROM THE SITE, AND THE AREA SHALL BE RETURNED TO ITS ORIGINAL CONDITION BY THE CONTRACTOR AS DIRECTED BY THE ENGINEER.
2. FURNISHING, INSTALLING, MAINTAINING AND REMOVING THE PUMP DISCHARGE/SEDIMENTATION BASIN WILL NOT BE MEASURED FOR PAYMENT, BUT WILL BE INCLUDED UNDER THE LUMP SUM ITEM "HANDLING WATER".
3. ALL DIMENSIONS ARE IN INCHES EXCEPT AS NOTED.
4. DISCHARGE AREA SIZING TO BE DETERMINED BY THE CONTRACTOR.
5. CONTRACTOR TO DETERMINE FINAL SIZE BASED ON PUMP DISCHARGE RATE AND VOLUMES.

REV.	DATE	REVISION DESCRIPTION	SHEET NO.
-	-	-	-
-	-	-	-
-	-	-	-
-	-	-	-
-	-	-	-
-	-	-	-

THE INFORMATION, INCLUDING ESTIMATED QUANTITIES OF WORK, SHOWN ON THESE SHEETS IS BASED ON LIMITED INVESTIGATIONS BY THE STATE AND IS IN NO WAY WARRANTED TO INDICATE THE CONDITIONS OF ACTUAL QUANTITIES OF WORK WHICH WILL BE REQUIRED.

Plotted: 7/28/2010

DESIGNER/DRAFTER: P. GILKEY
CHECKED BY: T. WALB
NTS

STATE OF CONNECTICUT
DEPARTMENT OF TRANSPORTATION

Filename: P:\General\Outgoing\ConnDOT\2010.0727-DEP Permit\Base-Data\HW_MSH_088_1035_SED-14.dgn

SIGNATURE/BLOCK: URS CORPORATION AES
APPROVED BY: -
DATE: -

PROJECT TITLE: NEW BRITAIN - HARTFORD BUSWAY

TOWN: NEW BRITAIN

DRAWING TITLE: SEDIMENTATION CONTROL DETAILS

PROJECT NO. 88-H035
DRAWING NO. SED-14
SHEET NO. S

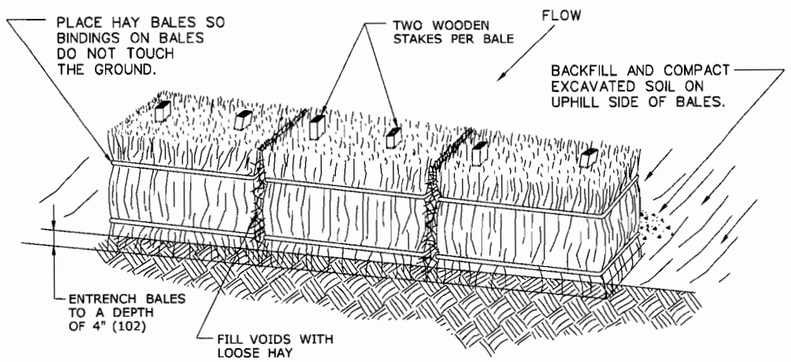

HAY BALE SYSTEM

GENERAL NOTES:

1. HAY BALES SHALL NOT BE USED IN A WATERCOURSE.
2. HAY BALES SHALL BE ENTRENCHED 4" (102) AND TIGHTLY BUTTED TOPGETHER. REMOVE HEAVY BRUSH AND FILL ALL VOIDS WITH LOOSE HAY.
3. WOOD STAKES SHALL HAVE A MINIMUM CROSS-SECTION SIZE OF AT LEAST 1" (102) x 1" (102) AND MINIMUM LENGTH OF 4 FT.(1219)
4. CLEAN OUT ACCUMULATED SEDIMENT WHEN ONE-HALF (1/2) OF THE ORIGINAL HEIGHT OF THE HAY BALE FENCE, AS INSTALLED, BECOMES FILLED WITH SEDIMENT OR AS DIRECTED BY THE ENGINEER.
5. NOT TO BE USED IN THE VICINITY OF URBAN AND RESIDENTIAL AREAS.

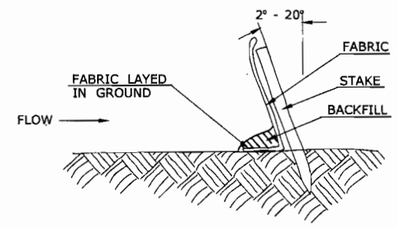

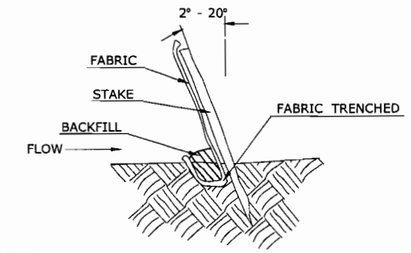

END VIEW

BACKFILLING GEOTEXTILE TOE

TRENCHING GEOTEXTILE TOE

GEOTEXTILE FENCE SYSTEM

GENERAL NOTES:

1. GEOTEXTILE FENCE SHOULD BE PLACED SO THE FENCE LEANS TOWARD THE SOURCE OF SEDIMENT.
2. MAXIMUM SPACING FOR WOODEN STAKES OR STEEL POSTS IS 10.0' (3048).
3. WOOD STAKES SHALL HAVE A MINIMUM CROSS-SECTION SIZE OF 1.5" (457) X 1.5" (457) AND MINIMUM LENGTH OF 4 FT. (1219) STEEL POSTS SHALL BE AT LEAST 0.5 LB. PER FOOT WITH A MINIMUM LENGTH OF 4 FT. (1219).
4. WOODEN STAKES OR STEEL POSTS SHALL BE DRIVEN TO A MINIMUM OF 1' (305) INTO THE GROUND.
5. 6" (152) OF GEOTEXTILE SHALL BE BURIED BY BACKFILLING OR TRENCHING AND AT LEAST 2.5' (762) IN HEIGHT OF GEOTEXTILE SHALL BE EXPOSED.
6. FABRIC SHALL BE JOINED ONLY AT A SUPPORT POST WITH A MINIMUM OF 6" (152) OVERLAP AND SECURITY SEALED.
7. UPON RE-ESTABLISHMENT OF GROUND COVER IN DISTURBED AREAS AND WHEN DIRECTED BY THE ENGINEER, OR UPON FINAL INSPECTION FENCE AND ANY SEDIMENT SHALL BE REMOVED. AT NO TIME WILL THE FENCE REMAIN IN PLACE AFTER PROJECT COMPLETION.
8. GEOTEXTILE FENCE SHALL NOT BE USED IN A WATER COARSE.
9. ONLY GEOTEXTILE FROM THE DEPARTMENTS APPROVED PRODUCT LIST SHALL BE USED.
10. BACKFILLING OF GEOTEXTILE SHALL ONLY BE USED WHEN GROUND IS FROZEN OR WHERE OTHER OBSTRUCTIONS ARE ENCOUNTERED THAT PROHIBITE TRENCHING, IE, STUMPS OR ROCKS.
11. CLEAN OUT ACCUMULATION SEDIMENT WHEN ONE-HALF (1/2) OF THE ORIGINAL HEIGHT OF THE GEOTEXTILE FENCE, AS INSTALLED , BECOMES FILLED WITH SEDIMENT OR AS DIRECTED BY THE ENGINEER.

REV.	DATE	REVISION DESCRIPTION	SHEET NO.
-	-	-	-
-	-	-	-
-	-	-	-
-	-	-	-
-	-	-	-
-	-	-	-

THE INFORMATION, INCLUDING ESTIMATED QUANTITIES OF WORK, SHOWN ON THESE SHEETS IS BASED ON LIMITED INVESTIGATIONS BY THE STATE AND IS IN NO WAY WARRANTED TO INDICATE THE CONDITIONS OF ACTUAL QUANTITIES OF WORK WHICH WILL BE REQUIRED.

Plotted: 7/28/2010

DESIGNER/DRAFTER: CTDOT
CHECKED BY: CTDOT
NTS

STATE OF CONNECTICUT
DEPARTMENT OF TRANSPORTATION

Filename: P:\General\Outgoing\ConnDOT\2010.0727-DEP Permit\Base-Data\HW_MSH_088_H035_SED-15.dgn

SIGNATURE/ BLOCK: OFFICE OF ENGINEERING
APPROVED BY: -
DATE: -

PROJECT TITLE: NEW BRITAIN - HARTFORD BUSWAY

TOWN: NEW BRITAIN

DRAWING TITLE: SEDIMENTATION CONTROL SYSTEM DETAILS

PROJECT NO. 88-H035
DRAWING NO. SED-15
SHEET NO. S

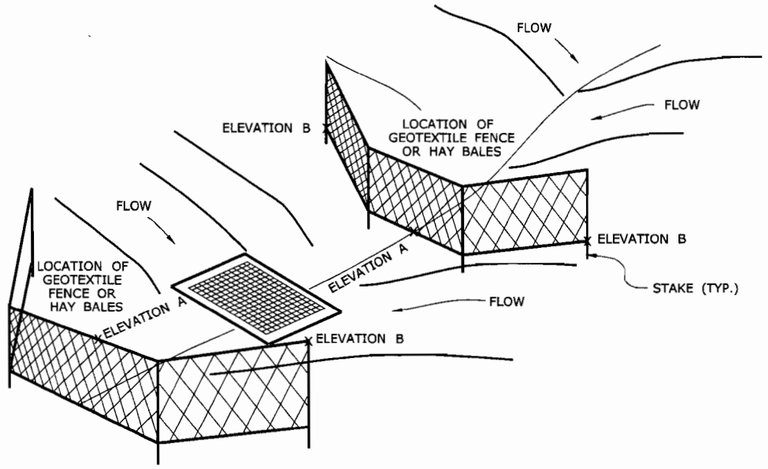

TREATMENT FOR A CATCH BASIN ON A SLOPE

(SEE NOTE 4)

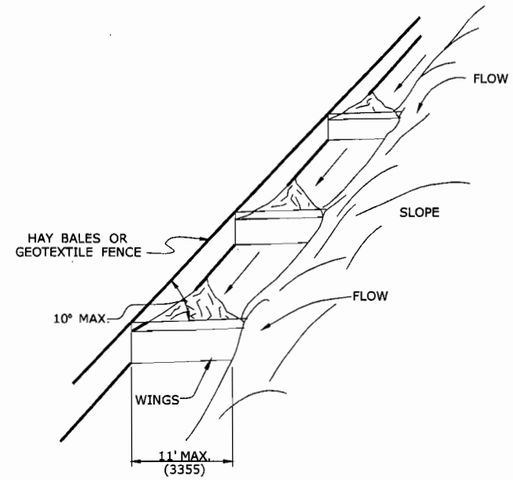

TREATMENT AT TOE OF SLOPE

(SEE NOTE 3)

GENERAL NOTES:

1. THE CONTRACTOR SHALL MAINTAIN THE EARTHEN BERM AS DIRECTED BY THE ENGINEER.
2. WHEN USING A SEDIMENTATION CONTROL SYSTEM ALONG THE TOE OF SLOPE, ADD WINGS TO PREVENT SEDIMENT FROM MOVING ALONG THE FENCE AND OFF THE SITE. MINIMUM SPACING FOR WINGS IS 25' (7620).
3. CATCH BASIN ON SLOPE SHOULD NOT BE RINGED. THE SPACING OF SEDIMENTATION CONTROL SYSTEM SHALL VARY WITH SLOPE.
4. ELEVATION B = A + 12" (305) MIN.

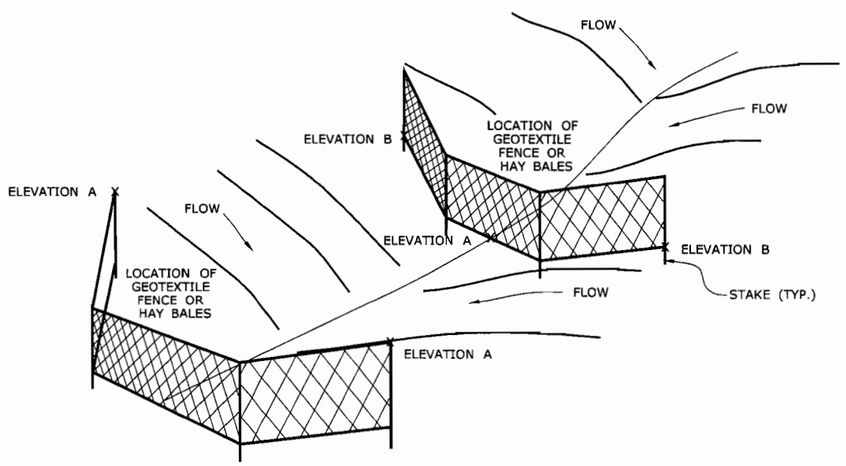

CHECK DAM

(SEE NOTE 4)

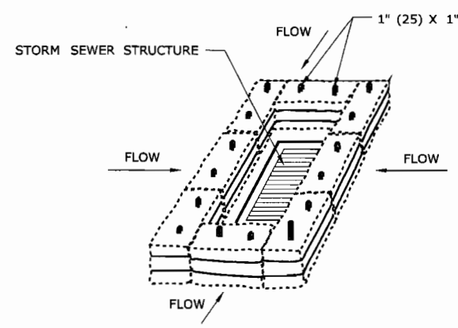

HAY BALE AT CATCH BASIN

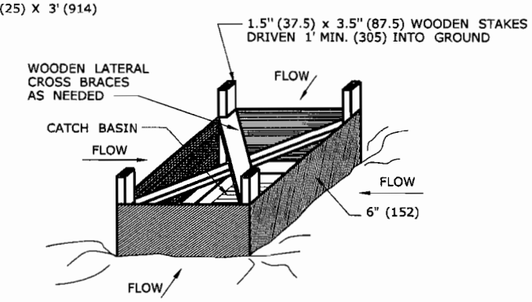

GEOTEXTILE FENCE AT CATCH BASIN

TREATMENT FOR A CATCH BASIN IN A DEPRESSION

REV.	DATE	REVISION DESCRIPTION	SHEET NO.
-	-	-	-
-	-	-	-
-	-	-	-
-	-	-	-
-	-	-	-
-	-	-	-

THE INFORMATION, INCLUDING ESTIMATED QUANTITIES OF WORK, SHOWN ON THESE SHEETS IS BASED ON LIMITED INVESTIGATIONS BY THE STATE AND IS IN NO WAY WARRANTED TO INDICATE THE CONDITIONS OF ACTUAL QUANTITIES OF WORK WHICH WILL BE REQUIRED.

Plotted: 7/28/2010

DESIGNER/DRAFTER: CTDOT
CHECKED BY: CTDOT
NTS

STATE OF CONNECTICUT
DEPARTMENT OF TRANSPORTATION

Filename: P:\General\Outgoing\ConnDOT\2010_0727-DEP Permit\Base-Data\HW_MSH_088_H035_SED-16.dgn

SIGNATURE/BLOCK: OFFICE OF ENGINEERING
APPROVED BY: -
DATE: -

PROJECT TITLE: NEW BRITAIN - HARTFORD BUSWAY

TOWN: NEW BRITAIN

DRAWING TITLE: SEDIMENTATION CONTROL TREATMENT DETAILS

PROJECT NO. 88-H035
DRAWING NO. SED-16
SHEET NO. S

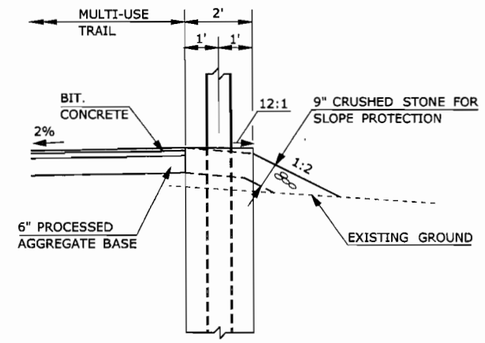

SLOPE PROTECTION DETAIL (MUT w/NOISE WALL)

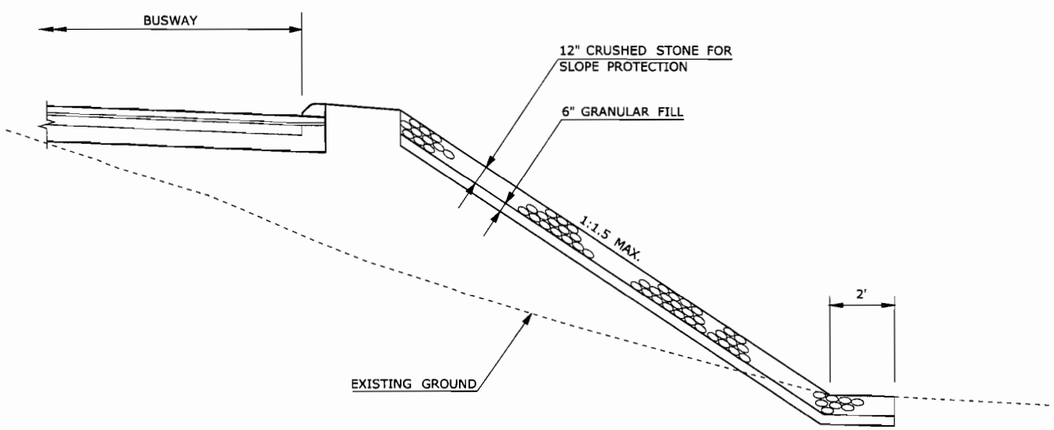

SLOPE PROTECTION DETAIL (FILL)

BUSWAY STA. 94+80 TO STA.95+75

FINAL DESIGN REVIEW

REV.	DATE	REVISION DESCRIPTION	SHEET NO.
-	-	-	-
-	-	-	-
-	-	-	-
-	-	-	-
-	-	-	-
-	-	-	-

THE INFORMATION, INCLUDING ESTIMATED QUANTITIES OF WORK, SHOWN ON THESE SHEETS IS BASED ON LIMITED INVESTIGATIONS BY THE STATE AND IS IN NO WAY WARRANTED TO INDICATE THE CONDITIONS OF ACTUAL QUANTITIES OF WORK WHICH WILL BE REQUIRED.

Plotted: 7/28/2010

DESIGNER/DRAFTER: P. GILKEY
CHECKED BY: T. WALB
NTS

STATE OF CONNECTICUT
DEPARTMENT OF TRANSPORTATION

Filename: P:\General\Outgoing\ConnDOT\2010_0727-DEP Permit\Base-Data\HW_MSH_088_H035_SED-17.dgn

SIGNATURE/ BLOCK: URS CORPORATION AES
APPROVED BY: - DATE: -

PROJECT TITLE: NEW BRITAIN - HARTFORD BUSWAY

TOWN: NEW BRITAIN

DRAWING TITLE: SLOPE PROTECTION

PROJECT NO. 88-H035
DRAWING NO. SED-17
SHEET NO. S

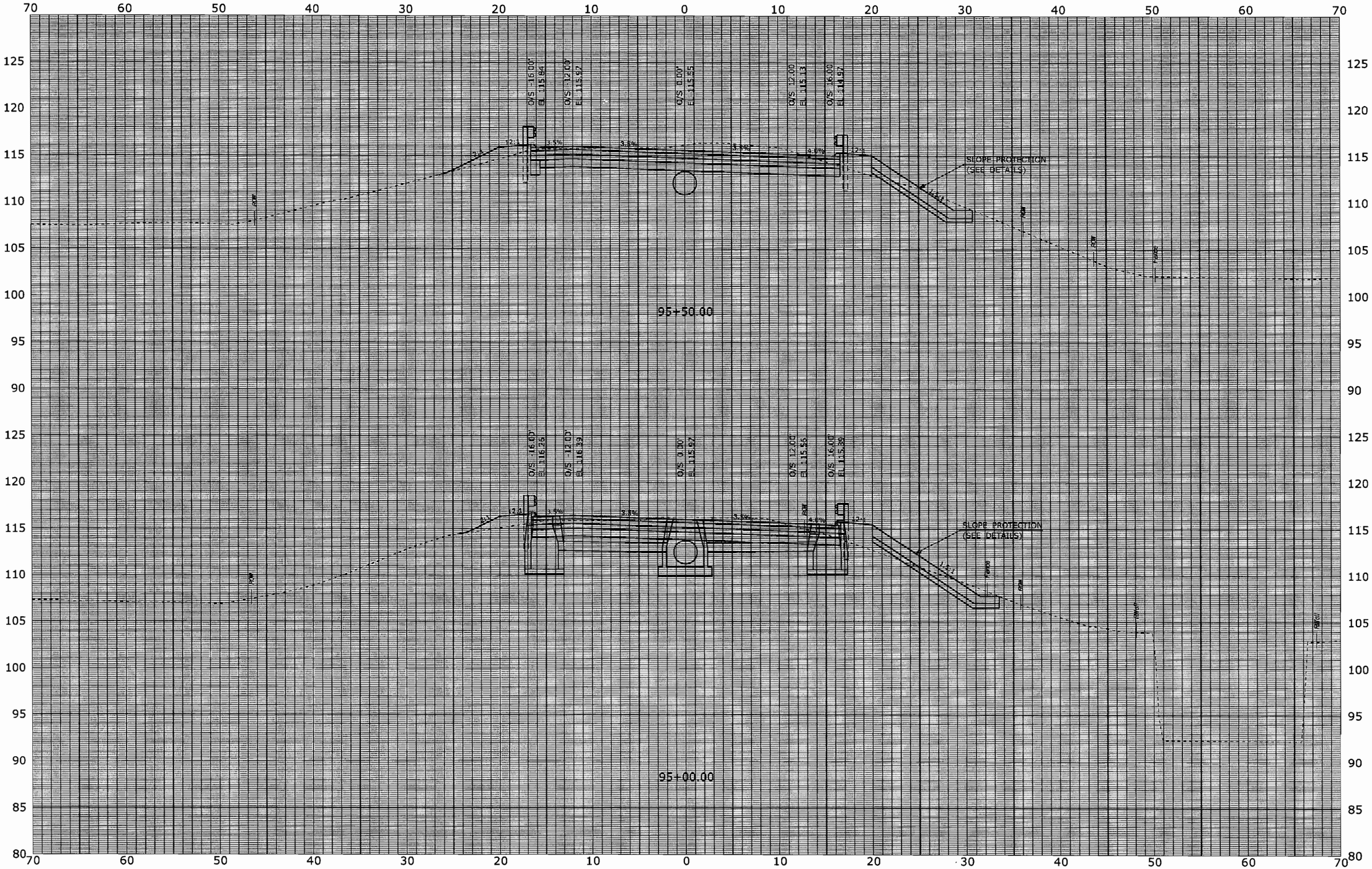

FINAL DESIGN REVIEW

REV.	DATE	REVISION DESCRIPTION	SHEET NO.

THE INFORMATION, INCLUDING ESTIMATED QUANTITIES OF WORK, SHOWN ON THESE SHEETS IS BASED ON LIMITED INVESTIGATIONS BY THE STATE AND IS IN NO WAY WARRANTED TO INDICATE THE CONDITIONS OF ACTUAL QUANTITIES OF WORK WHICH WILL BE REQUIRED.

Plotted: 7/28/2010

DESIGNER/DRAFTER: P. GILKEY
CHECKED BY: T. WALB
SCALE IN FEET 0 5 10
SCALE 1" = 5'

STATE OF CONNECTICUT
DEPARTMENT OF TRANSPORTATION

Filename: P:\General\Outgoing\ConnDOT\2010.0727-DEP Permit\Base-Data\XSC-003.dgn

SIGNATURE/BLOCK: URS CORPORATION AES
APPROVED BY: -
DATE: -

PROJECT TITLE: NEW BRITAIN - HARTFORD BUSWAY

TOWN: NEW BRITAIN

DRAWING TITLE: CROSS SECTIONS

PROJECT NO. 88-H035
DRAWING NO. XSC-073
SHEET NO. 573

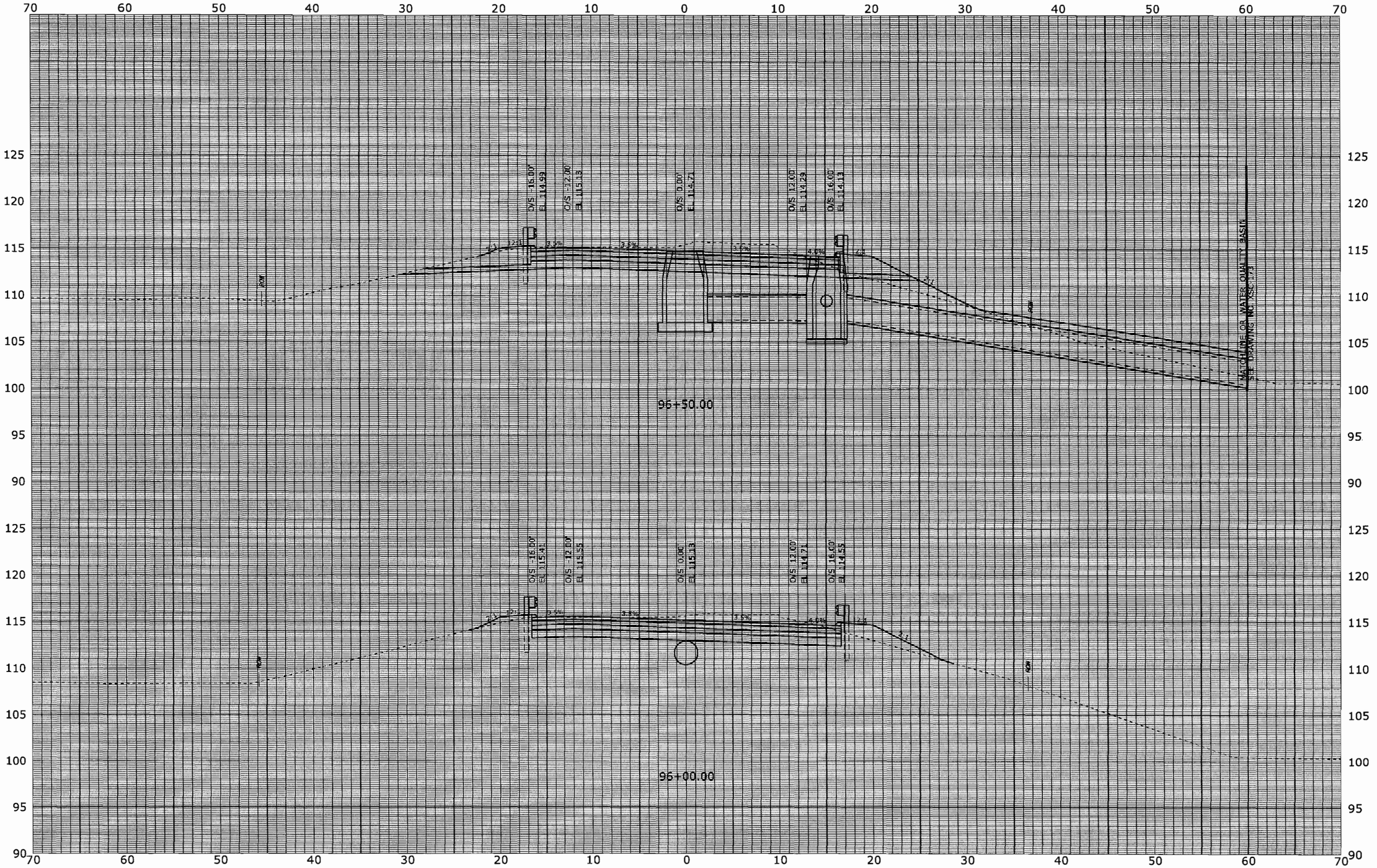

FINAL DESIGN REVIEW

REV.	DATE	REVISION DESCRIPTION	SHEET NO.

THE INFORMATION, INCLUDING ESTIMATED QUANTITIES OF WORK, SHOWN ON THESE SHEETS IS BASED ON LIMITED INVESTIGATIONS BY THE STATE AND IS IN NO WAY WARRANTED TO INDICATE THE CONDITIONS OF ACTUAL QUANTITIES OF WORK WHICH WILL BE REQUIRED.

Plotted: 7/28/2010

DESIGNER/DRAFTER: P. GILKEY
CHECKED BY: T. WALB
SCALE IN FEET 0 5 10
SCALE 1" = 5'

STATE OF CONNECTICUT
DEPARTMENT OF TRANSPORTATION

Filename: P:\General\Outgoing\ConnDOT\2010_0727-DEP Permit\Base-Data\XSC-003.dgn

SIGNATURE/BLOCK: URS CORPORATION AES
APPROVED BY: -
DATE: -

PROJECT TITLE: NEW BRITAIN - HARTFORD BUSWAY

TOWN: NEW BRITAIN

DRAWING TITLE: CROSS SECTIONS

PROJECT NO. 88-H035
DRAWING NO. XSC-074
SHEET NO. 574

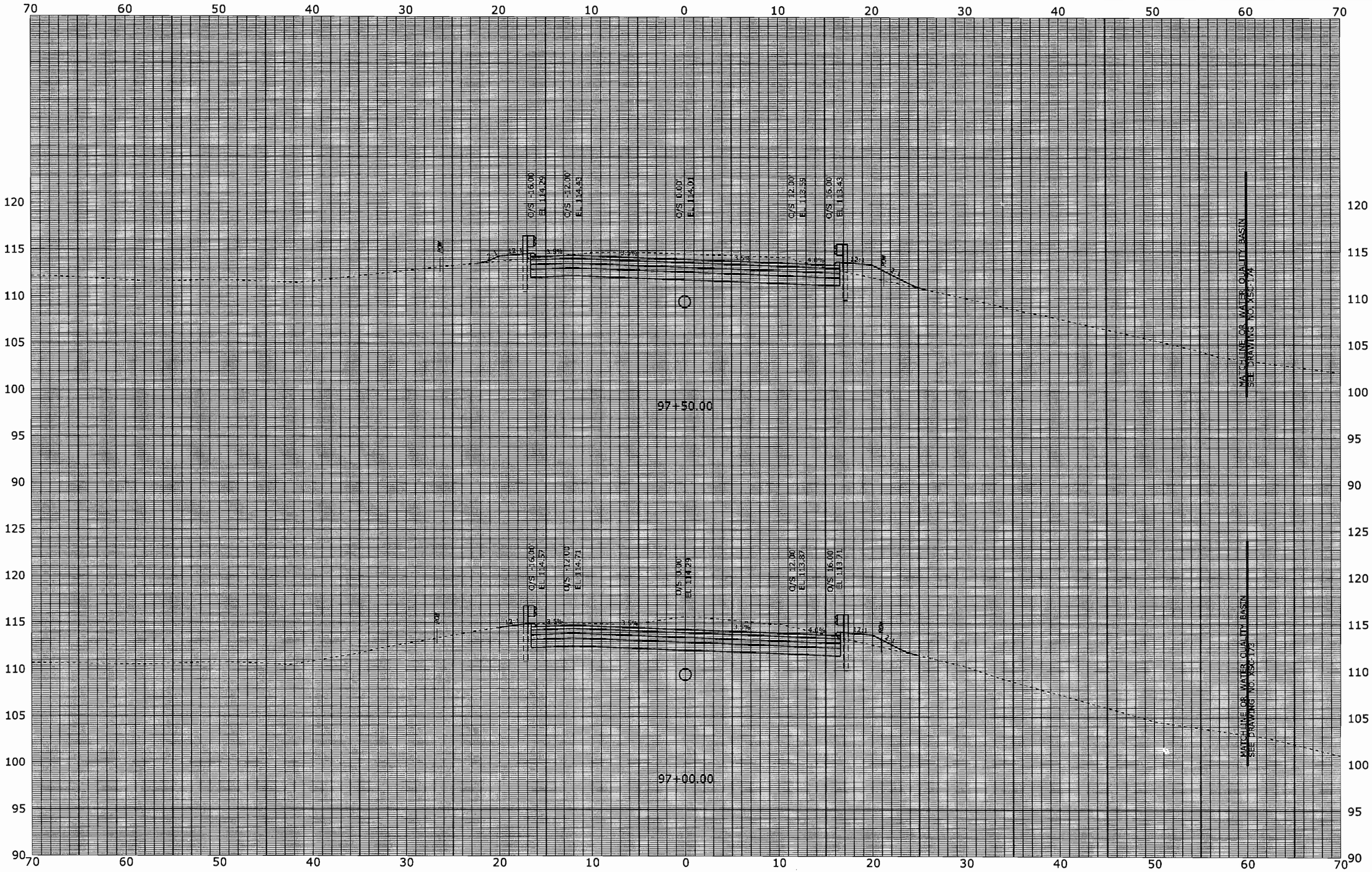

FINAL DESIGN REVIEW

REV.	DATE	REVISION DESCRIPTION	SHEET NO.

THE INFORMATION, INCLUDING ESTIMATED QUANTITIES OF WORK, SHOWN ON THESE SHEETS IS BASED ON LIMITED INVESTIGATIONS BY THE STATE AND IS IN NO WAY WARRANTED TO INDICATE THE CONDITIONS OF ACTUAL QUANTITIES OF WORK WHICH WILL BE REQUIRED.

Plotted: 7/28/2010

DESIGNER/DRAFTER: P. GILKEY
CHECKED BY: T. WALB
SCALE IN FEET 0 5 10
SCALE 1" = 5'

STATE OF CONNECTICUT
DEPARTMENT OF TRANSPORTATION

Filename: P:\General\Outgoing\ConnDOT\2010_0727-DEP Permit\Base-Data\XSC-003.dgn

SIGNATURE/BLOCK: URS CORPORATION AES
APPROVED BY: -
DATE: -

PROJECT TITLE: NEW BRITAIN - HARTFORD BUSWAY

TOWN: NEW BRITAIN

DRAWING TITLE: CROSS SECTIONS

PROJECT NO. 88-H035
DRAWING NO. XSC-075
SHEET NO. 575

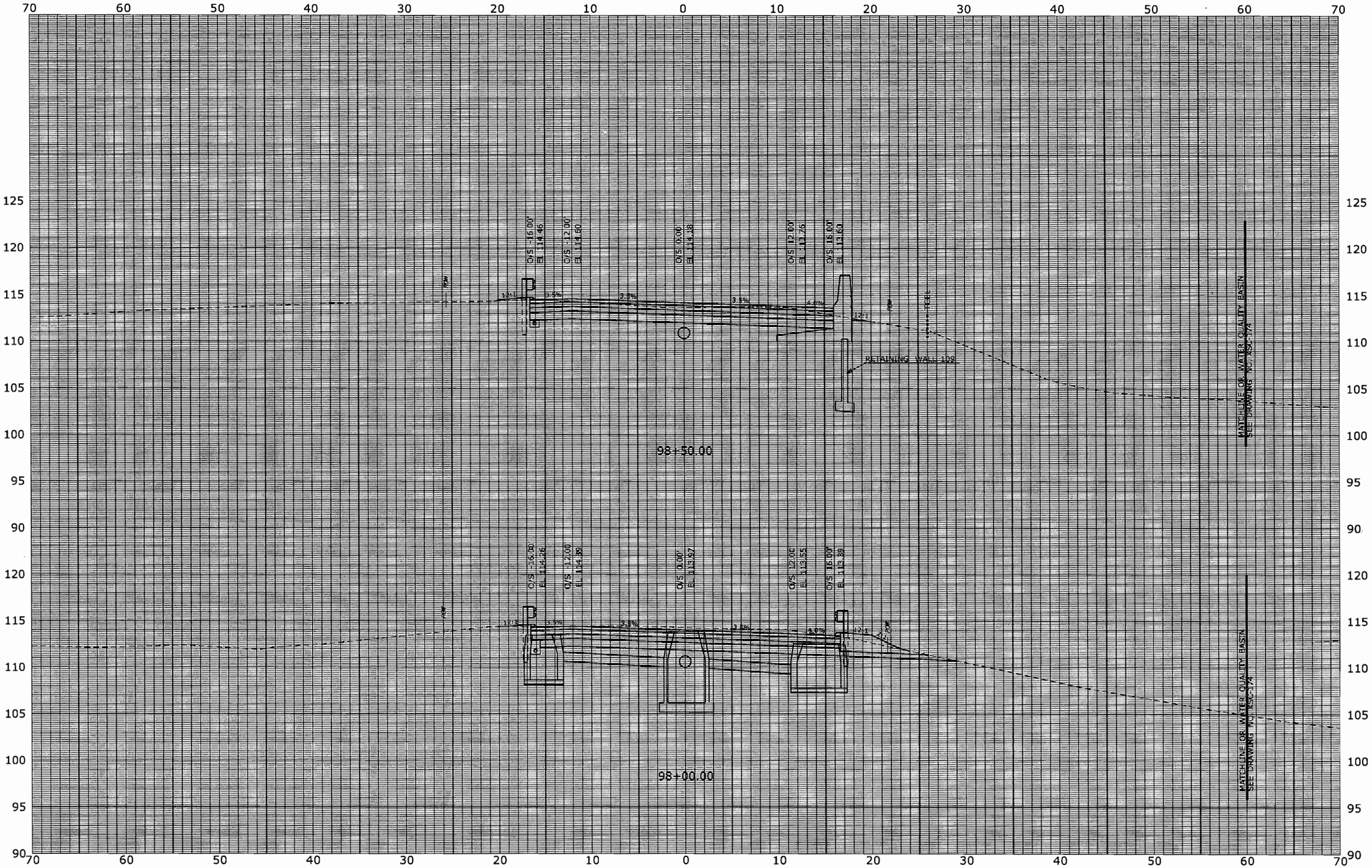

FINAL DESIGN REVIEW

REV.	DATE	REVISION DESCRIPTION	SHEET NO.

THE INFORMATION, INCLUDING ESTIMATED QUANTITIES OF WORK, SHOWN ON THESE SHEETS IS BASED ON LIMITED INVESTIGATIONS BY THE STATE AND IS IN NO WAY WARRANTED TO INDICATE THE CONDITIONS OF ACTUAL QUANTITIES OF WORK WHICH WILL BE REQUIRED.

Plotted: 7/28/2010

DESIGNER/DRAFTER: P. GILKEY
CHECKED BY: T. WALB
SCALE IN FEET
0 5 10
SCALE 1" = 5'

STATE OF CONNECTICUT
DEPARTMENT OF TRANSPORTATION

Filename: P:\General\Outgoing\ConnDOT\2010_0727-DEP Permit\Base-Data\XSC-003.dgn

SIGNATURE/BLOCK: URS CORPORATION AES
APPROVED BY: -
DATE: -

PROJECT TITLE: NEW BRITAIN - HARTFORD BUSWAY

TOWN: NEW BRITAIN

DRAWING TITLE: CROSS SECTIONS

PROJECT NO. 88-H035
DRAWING NO. XSC-076
SHEET NO. 576

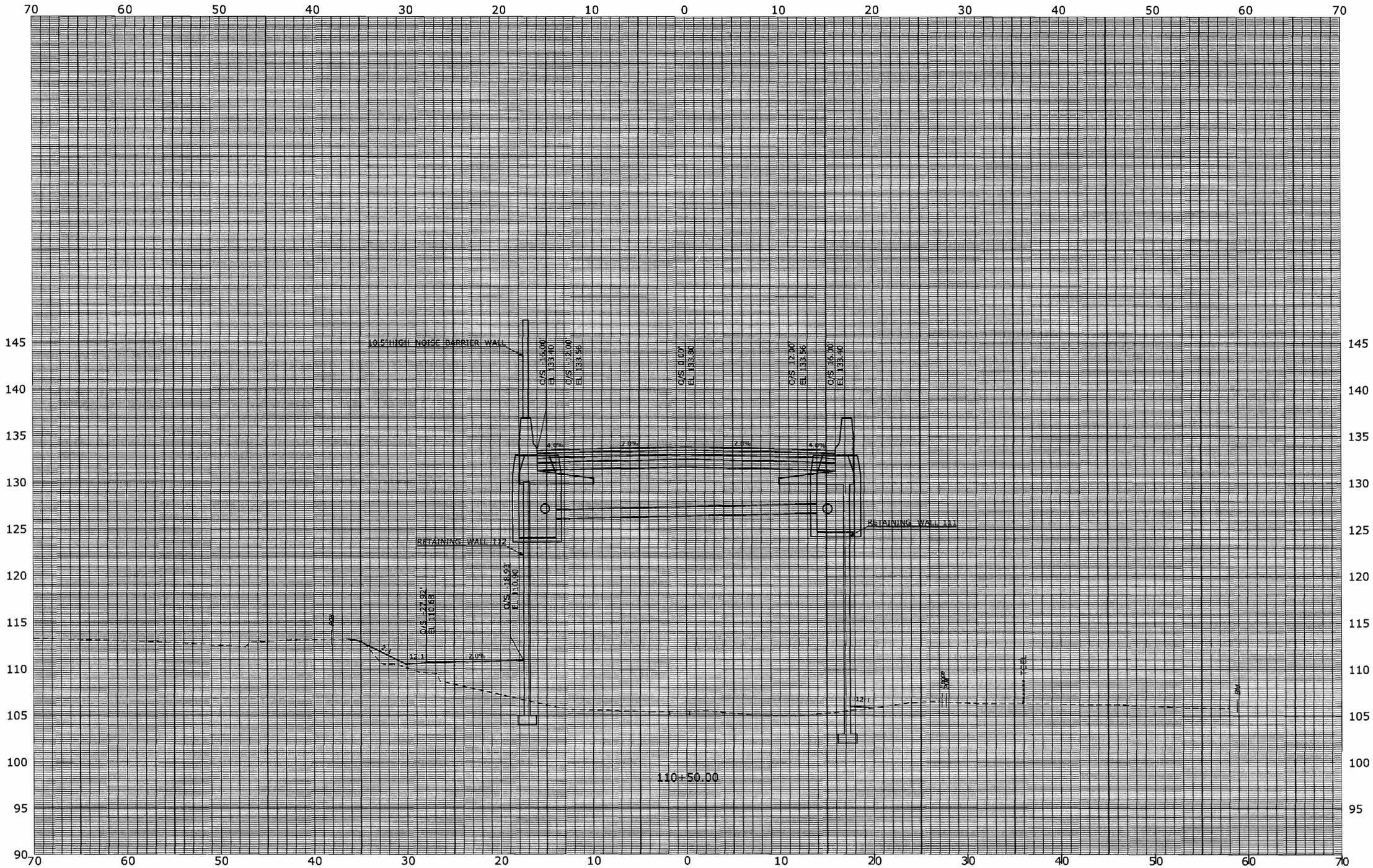

FINAL DESIGN REVIEW

REV.	DATE	REVISION DESCRIPTION	SHEET NO.

THE INFORMATION, INCLUDING ESTIMATED QUANTITIES OF WORK, SHOWN ON THESE SHEETS IS BASED ON LIMITED INVESTIGATIONS BY THE STATE AND IS IN NO WAY WARRANTED TO INDICATE THE CONDITIONS OF ACTUAL QUANTITIES OF WORK WHICH WILL BE REQUIRED.

Plotted: 7/28/2010

DESIGNER/DRAFTER: P. GILKEY

CHECKED BY: T. WALB

SCALE IN FEET 0 5 10

SCALE 1" = 5'

STATE OF CONNECTICUT
DEPARTMENT OF TRANSPORTATION

Filename: P:\General\Outgoing\ConnDOT\2010_0727-DEP Permit\Base-Data\XSC-003.dgn

SIGNATURE/ BLOCK: URS CORPORATION AES

APPROVED BY: - DATE: -

PROJECT TITLE: NEW BRITAIN - HARTFORD BUSWAY

TOWN: NEW BRITAIN

DRAWING TITLE: CROSS SECTIONS

PROJECT NO. 88-H035

DRAWING NO. XSC-096

SHEET NO. 596

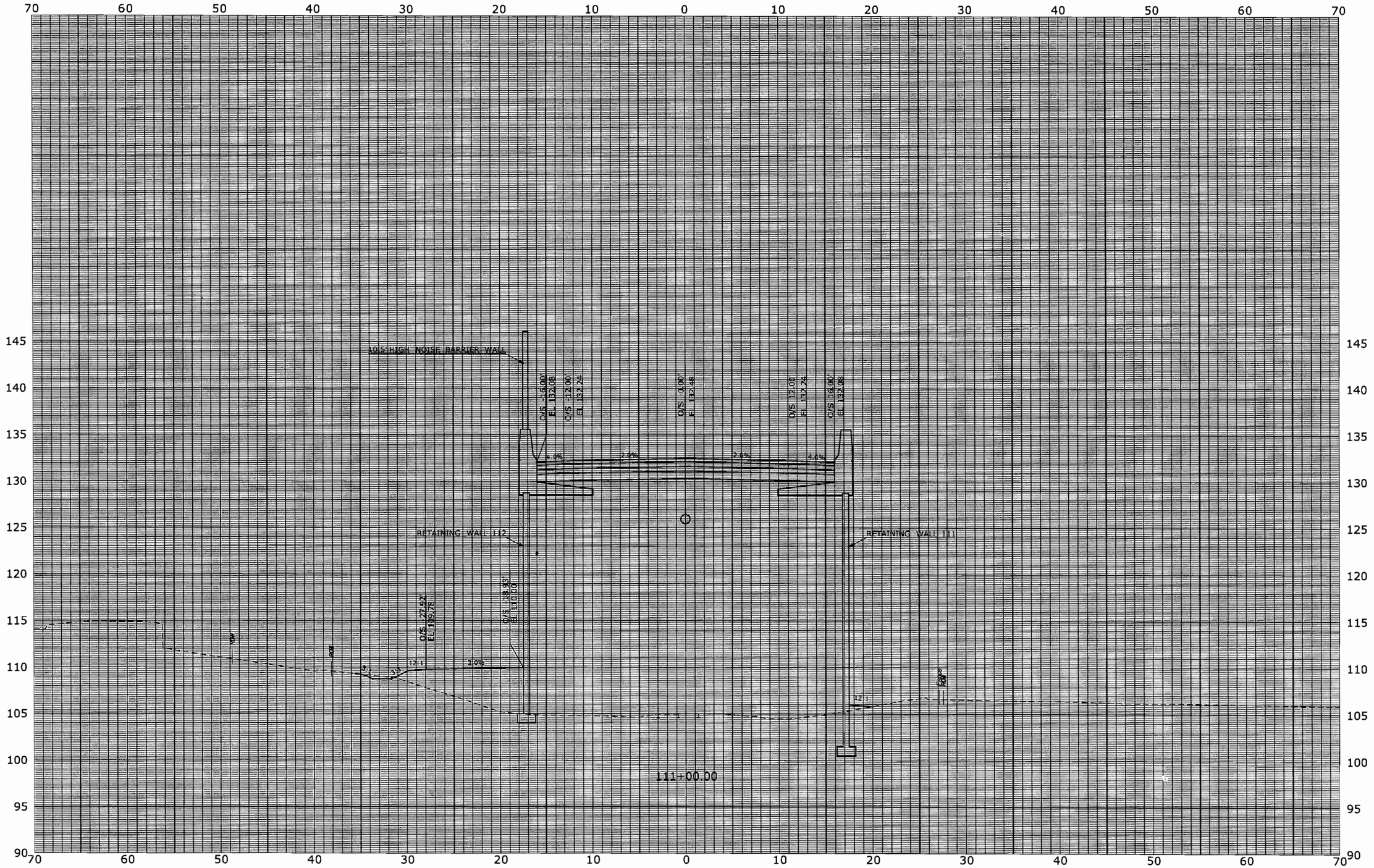

FINAL DESIGN REVIEW

REV.	DATE	REVISION DESCRIPTION	SHEET NO.

THE INFORMATION, INCLUDING ESTIMATED QUANTITIES OF WORK, SHOWN ON THESE SHEETS IS BASED ON LIMITED INVESTIGATIONS BY THE STATE AND IS IN NO WAY WARRANTED TO INDICATE THE CONDITIONS OF ACTUAL QUANTITIES OF WORK WHICH WILL BE REQUIRED.

Plotted: 7/28/2010

DESIGNER/DRAFTER: P. GILKEY

CHECKED BY: T. WALB

SCALE IN FEET 0 5 10

SCALE 1" = 5'

STATE OF CONNECTICUT
DEPARTMENT OF TRANSPORTATION

Filename: P:\General\Outgoing\ConnDOT\2010.0727-DEP Permit\Base-Data\XSC-003.dgn

SIGNATURE/BLOCK: URS CORPORATION AES

APPROVED BY: -

DATE: -

PROJECT TITLE: NEW BRITAIN - HARTFORD BUSWAY

TOWN: NEW BRITAIN

DRAWING TITLE: CROSS SECTIONS

PROJECT NO. 88-H035

DRAWING NO. XSC-097

SHEET NO. 597

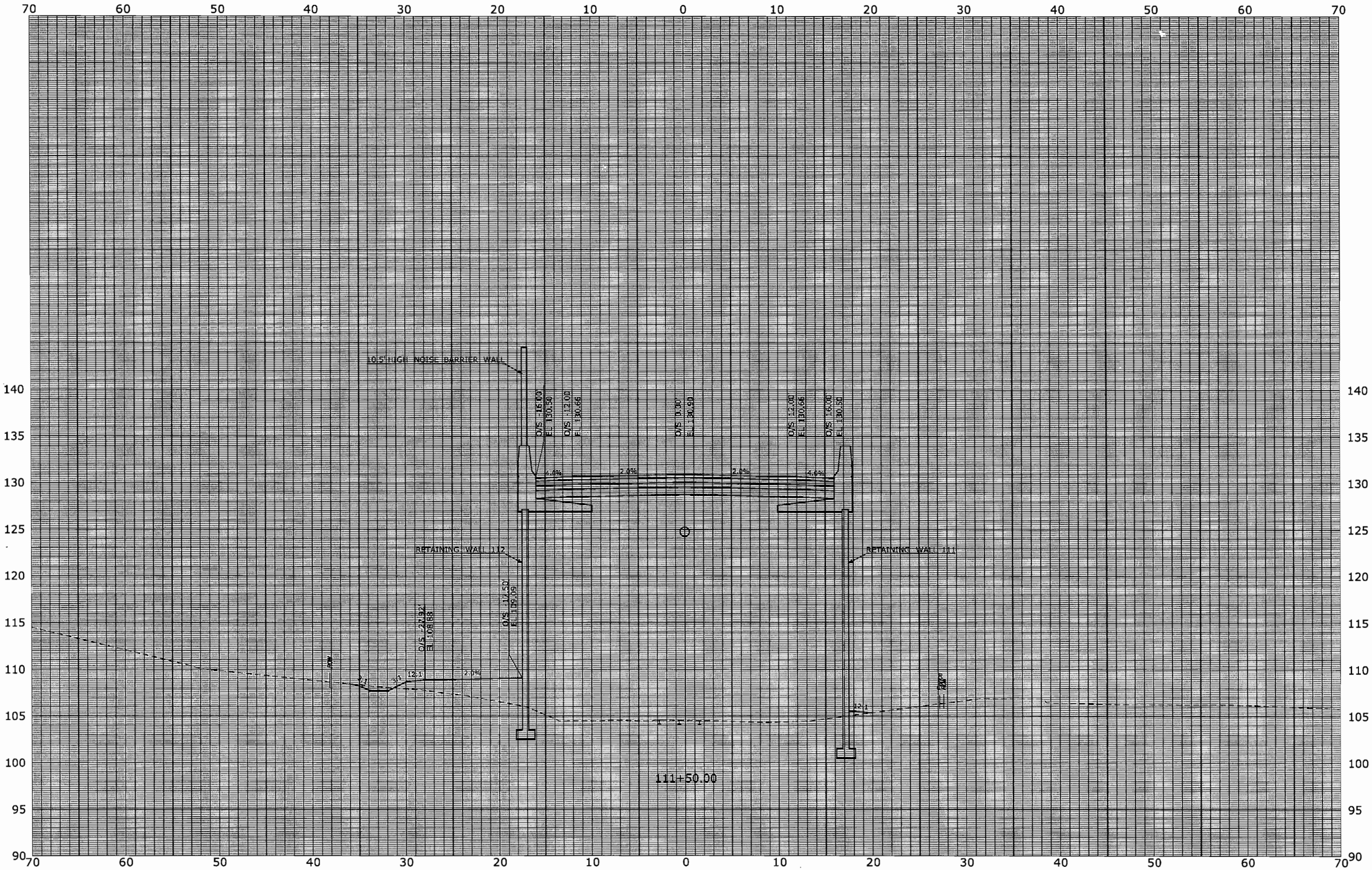

FINAL DESIGN REVIEW

REV.	DATE	REVISION DESCRIPTION	SHEET NO.

THE INFORMATION, INCLUDING ESTIMATED QUANTITIES OF WORK, SHOWN ON THESE SHEETS IS BASED ON LIMITED INVESTIGATIONS BY THE STATE AND IS IN NO WAY WARRANTED TO INDICATE THE CONDITIONS OF ACTUAL QUANTITIES OF WORK WHICH WILL BE REQUIRED.

Plotted: 7/28/2010

DESIGNER/DRAFTER: P. GILKEY

CHECKED BY: T. WALB

SCALE IN FEET 0 5 10

SCALE 1" = 5'

STATE OF CONNECTICUT
DEPARTMENT OF TRANSPORTATION

Filename: P:\General\Outgoing\ConnDOT\2010.0727-DEP Permit\Base-Data\XSC-003.dgn

SIGNATURE/ BLOCK: URS CORPORATION AES

APPROVED BY: - DATE: -

PROJECT TITLE: NEW BRITAIN - HARTFORD BUSWAY

TOWN: NEW BRITAIN

DRAWING TITLE: CROSS SECTIONS

PROJECT NO. 88-H035

DRAWING NO. XSC-098

SHEET NO. 598

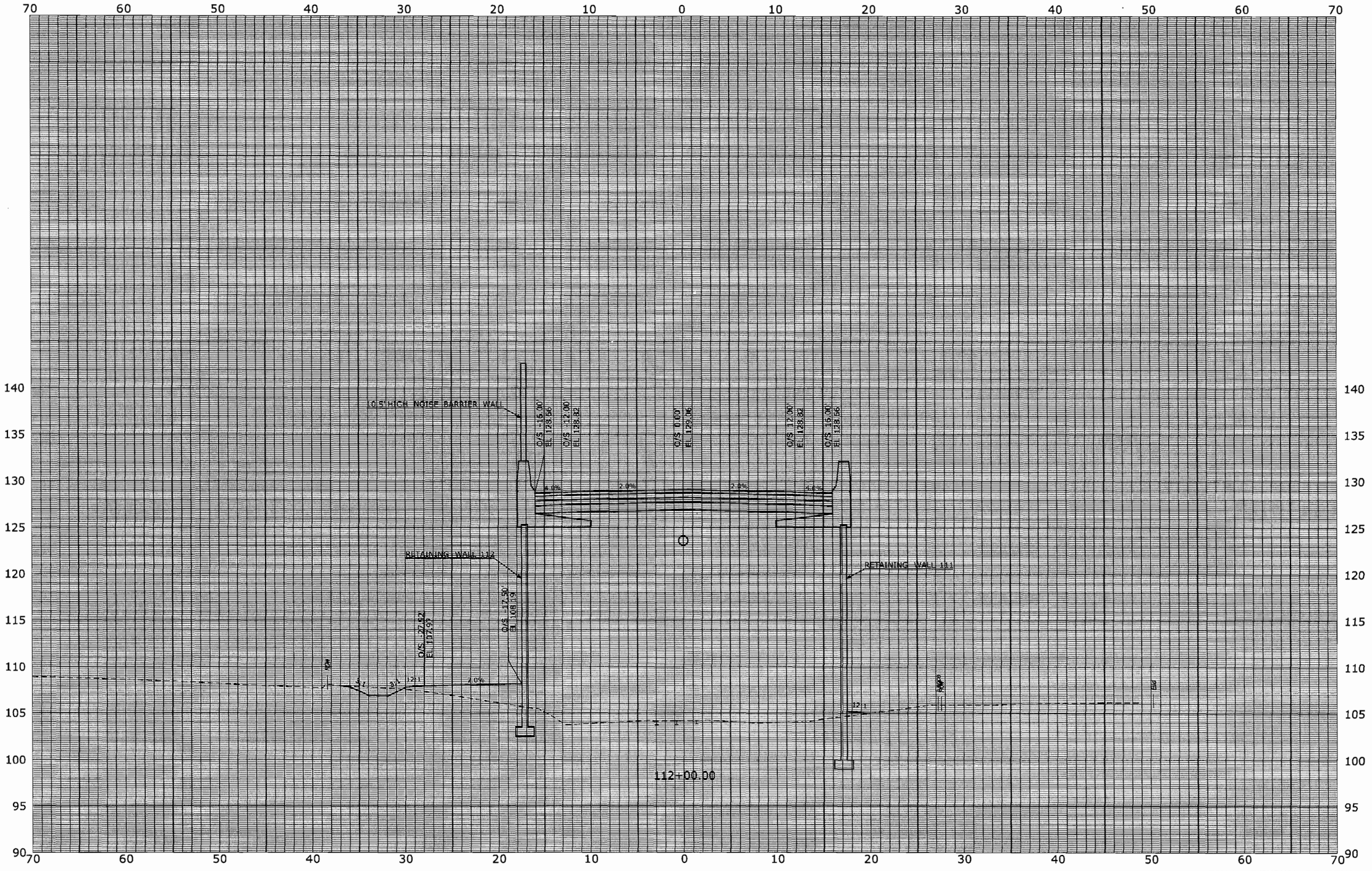

FINAL DESIGN REVIEW

REV.	DATE	REVISION DESCRIPTION	SHEET NO.

THE INFORMATION, INCLUDING ESTIMATED QUANTITIES OF WORK, SHOWN ON THESE SHEETS IS BASED ON LIMITED INVESTIGATIONS BY THE STATE AND IS IN NO WAY WARRANTED TO INDICATE THE CONDITIONS OF ACTUAL QUANTITIES OF WORK WHICH WILL BE REQUIRED.

Plotted: 7/28/2010

DESIGNER/DRAFTER: P. GILKEY

CHECKED BY: T. WALB

SCALE IN FEET 0 5 10

SCALE 1" = 5'

STATE OF CONNECTICUT
DEPARTMENT OF TRANSPORTATION

Filename: P:\General\Outgoing\ConnDOT\2010_0727-DEP Permit\Base-Data\XSC-003.dgn

SIGNATURE/ BLOCK: URS CORPORATION AES

APPROVED BY: - DATE: -

PROJECT TITLE: NEW BRITAIN - HARTFORD BUSWAY

TOWN: NEW BRITAIN

DRAWING TITLE: CROSS SECTIONS

PROJECT NO. 88-H035

DRAWING NO. XSC-099

SHEET NO. 599

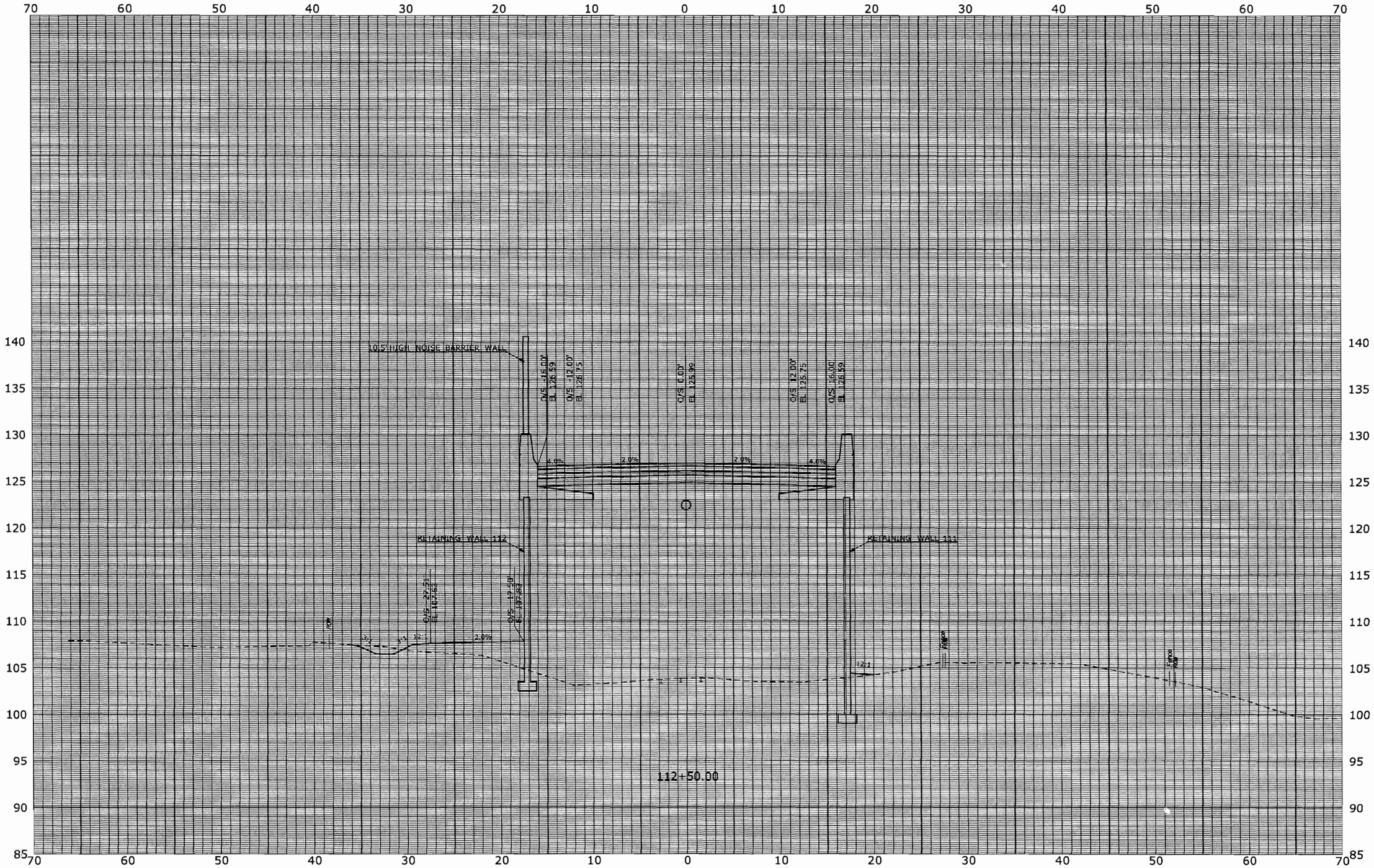

FINAL DESIGN REVIEW

REV.	DATE	REVISION DESCRIPTION	SHEET NO.

THE INFORMATION, INCLUDING ESTIMATED QUANTITIES OF WORK, SHOWN ON THESE SHEETS IS BASED ON LIMITED INVESTIGATIONS BY THE STATE AND IS IN NO WAY WARRANTED TO INDICATE THE CONDITIONS OF ACTUAL QUANTITIES OF WORK WHICH WILL BE REQUIRED.

Plotted: 7/28/2010

DESIGNER/DRAFTER: P. GILKEY

CHECKED BY: T. WALB

SCALE IN FEET 0 5 10

SCALE 1" = 5'

STATE OF CONNECTICUT
DEPARTMENT OF TRANSPORTATION

Filename: P:\General\Outgoing\Conn\DOT\2010_0727-DEP Permit\Base-Data\XSC-003.dgn

SIGNATURE/BLOCK: URS CORPORATION AES

APPROVED BY: -

DATE: -

PROJECT TITLE: NEW BRITAIN - HARTFORD BUSWAY

TOWN: NEW BRITAIN

DRAWING TITLE: CROSS SECTIONS

PROJECT NO. 88-H035

DRAWING NO. XSC-100

SHEET NO. 600

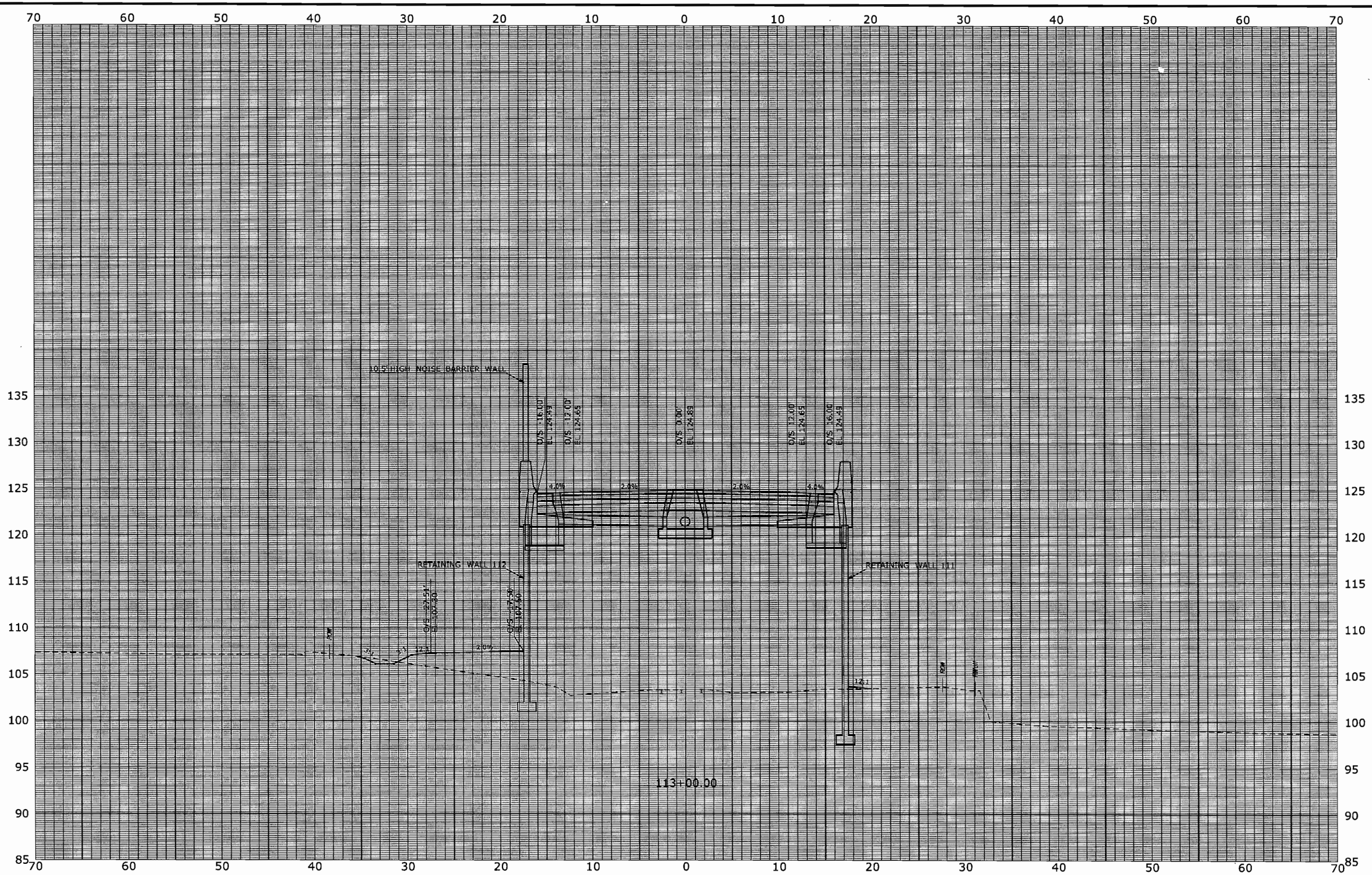

FINAL DESIGN REVIEW

REV.	DATE	REVISION DESCRIPTION	SHEET NO.

THE INFORMATION, INCLUDING ESTIMATED QUANTITIES OF WORK, SHOWN ON THESE SHEETS IS BASED ON LIMITED INVESTIGATIONS BY THE STATE AND IS IN NO WAY WARRANTED TO INDICATE THE CONDITIONS OF ACTUAL QUANTITIES OF WORK WHICH WILL BE REQUIRED.

Plotted: 7/28/2010

DESIGNER/DRAFTER: P. GILKEY
CHECKED BY: T. WALB
SCALE IN FEET
0 5 10
SCALE 1" = 5'

STATE OF CONNECTICUT
DEPARTMENT OF TRANSPORTATION

Filename: P:\General\Outgoing\ConnDOT\2010_0727-DEP Permit\Base-Data\XSC-003.dgn

SIGNATURE/BLOCK: URS CORPORATION AES
APPROVED BY: -
DATE: -

PROJECT TITLE: NEW BRITAIN - HARTFORD BUSWAY

TOWN: NEW BRITAIN

DRAWING TITLE: CROSS SECTIONS

PROJECT NO. 88-H035
DRAWING NO. XSC-101
SHEET NO. 601

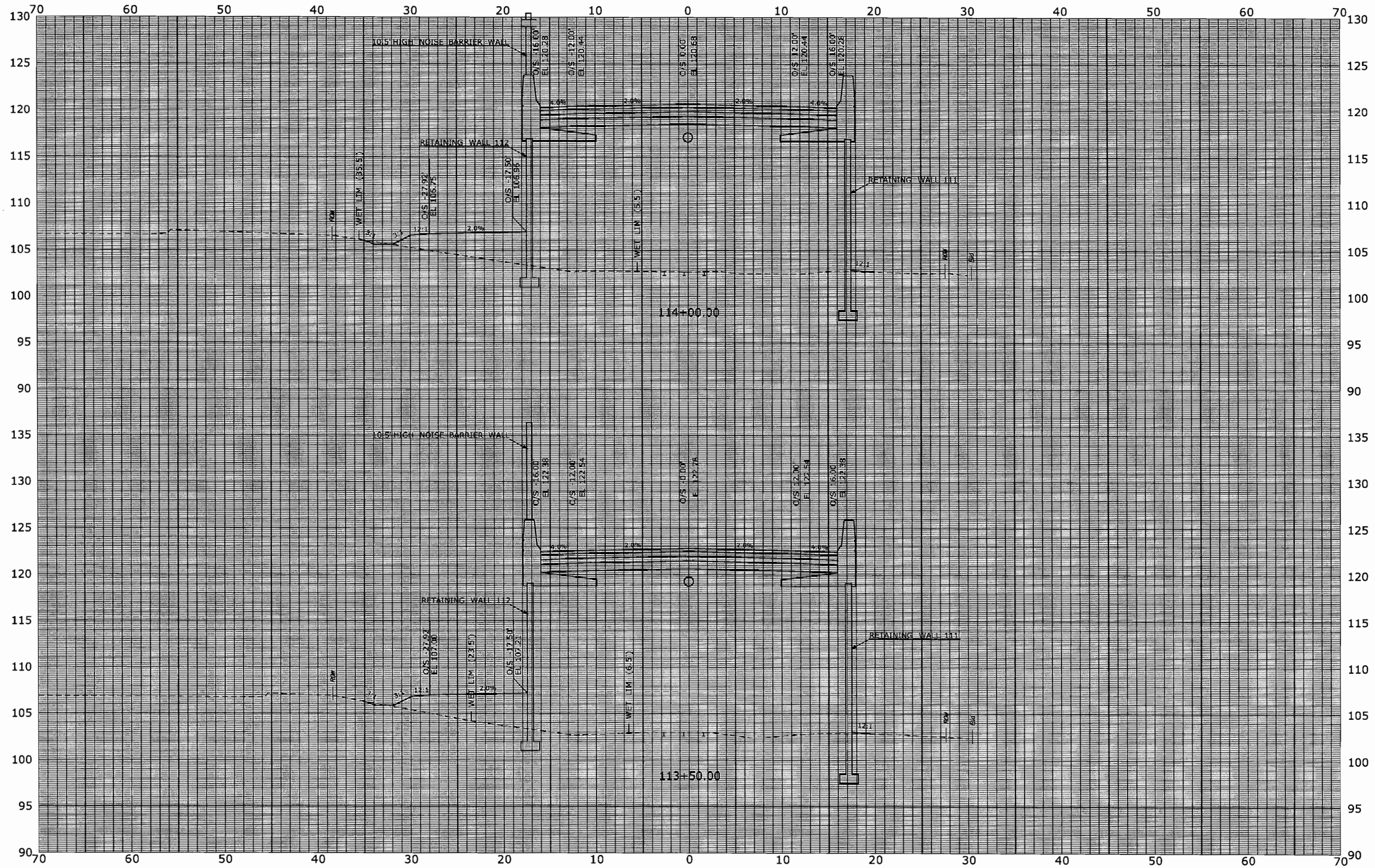

FINAL DESIGN REVIEW

REV.	DATE	REVISION DESCRIPTION	SHEET NO.

THE INFORMATION, INCLUDING ESTIMATED QUANTITIES OF WORK, SHOWN ON THESE SHEETS IS BASED ON LIMITED INVESTIGATIONS BY THE STATE AND IS IN NO WAY WARRANTED TO INDICATE THE CONDITIONS OF ACTUAL QUANTITIES OF WORK WHICH WILL BE REQUIRED.

Plotted: 7/28/2010

DESIGNER/DRAFTER: P. GILKEY

CHECKED BY: T. WALB

SCALE IN FEET 0 5 10

SCALE 1" = 5'

STATE OF CONNECTICUT
DEPARTMENT OF TRANSPORTATION

Filename: P:\General\Outgoing\ConnDOT\2010_0727-DEP Permit\Base-Data\XSC-003.dgn

SIGNATURE/BLOCK: URS CORPORATION AES

APPROVED BY: - DATE: -

PROJECT TITLE: NEW BRITAIN - HARTFORD BUSWAY

TOWN: NEW BRITAIN

DRAWING TITLE: CROSS SECTIONS

PROJECT NO. 88-H035

DRAWING NO. XSC-102

SHEET NO. 602

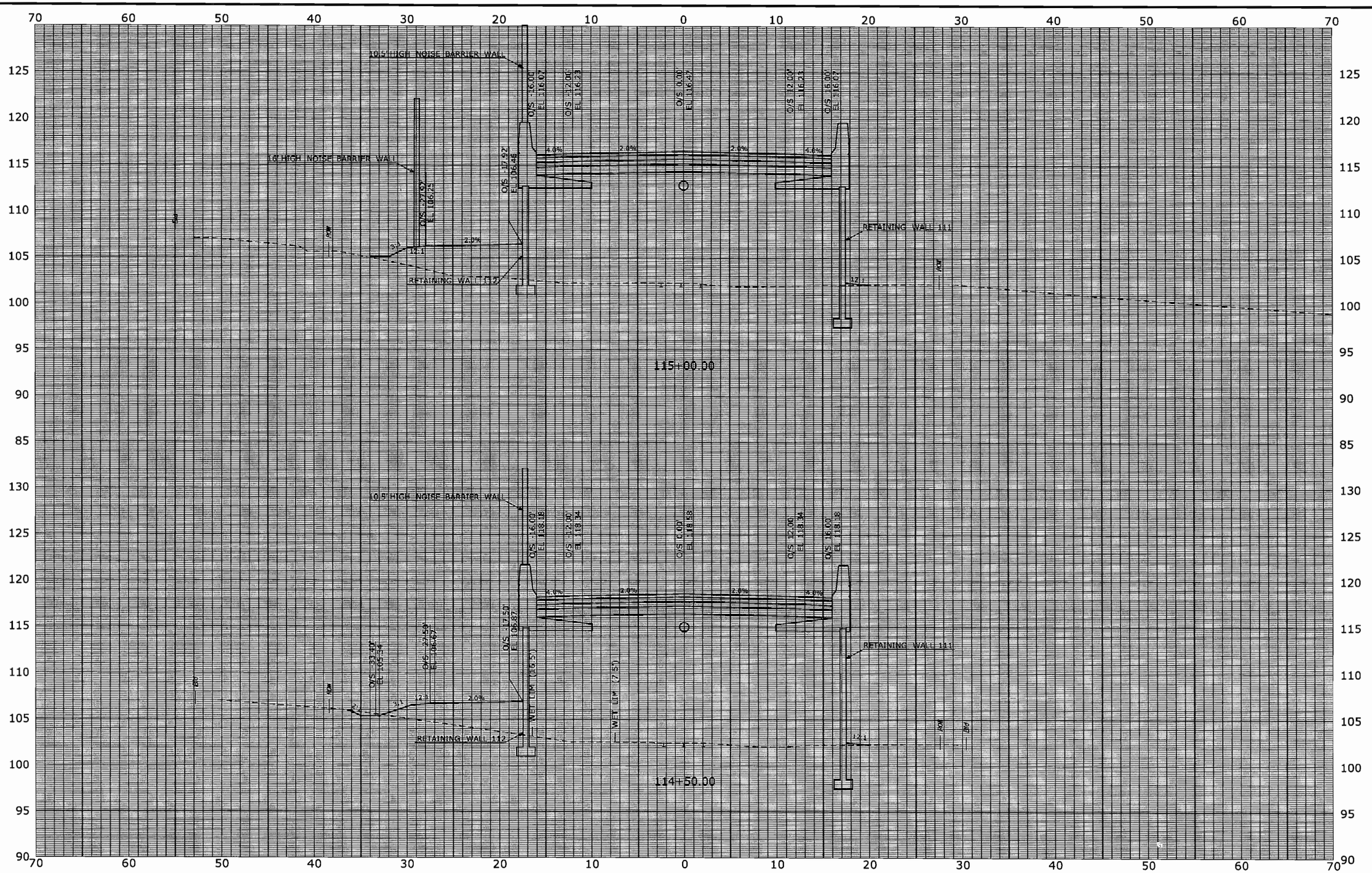

FINAL DESIGN REVIEW

REV.	DATE	REVISION DESCRIPTION	SHEET NO.

THE INFORMATION, INCLUDING ESTIMATED QUANTITIES OF WORK, SHOWN ON THESE SHEETS IS BASED ON LIMITED INVESTIGATIONS BY THE STATE AND IS IN NO WAY WARRANTED TO INDICATE THE CONDITIONS OF ACTUAL QUANTITIES OF WORK WHICH WILL BE REQUIRED.

Plotted: 7/28/2010

DESIGNER/DRAFTER: P. GILKEY
CHECKED BY: T. WALB
SCALE IN FEET
0 5 10
SCALE 1" = 5'

STATE OF CONNECTICUT
DEPARTMENT OF TRANSPORTATION

Filename: P:\General\Outgoing\ConnDOT\2010_0727-DEP Permit\Base-Data\XSC-003.dgn

SIGNATURE/BLOCK: URS CORPORATION AES
APPROVED BY: -
DATE: -

PROJECT TITLE: NEW BRITAIN - HARTFORD BUSWAY

TOWN: NEW BRITAIN

DRAWING TITLE: CROSS SECTIONS

PROJECT NO. 88-H035
DRAWING NO. XSC-103
SHEET NO. 603

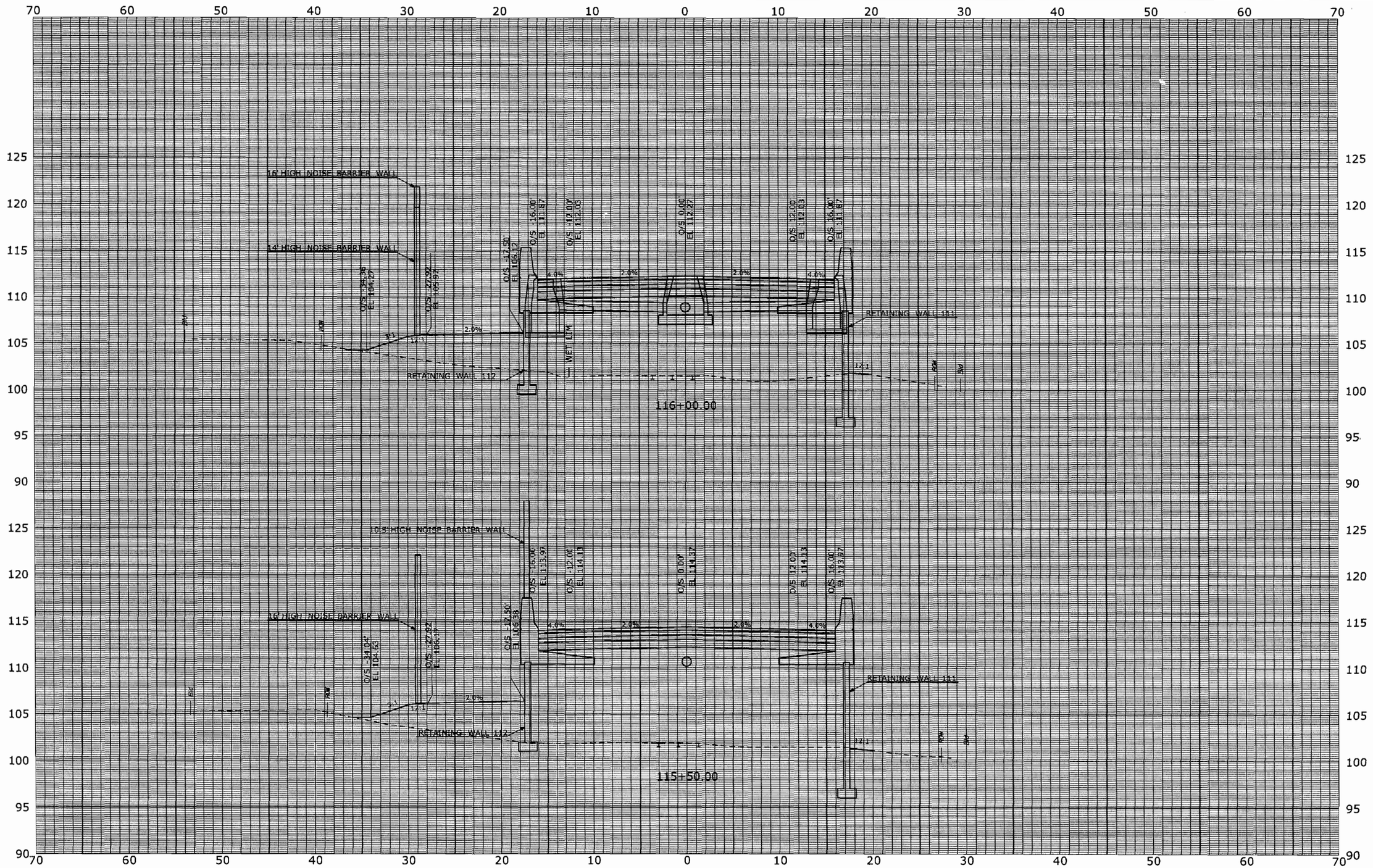

FINAL DESIGN REVIEW

REV.	DATE	REVISION DESCRIPTION	SHEET NO.

THE INFORMATION, INCLUDING ESTIMATED QUANTITIES OF WORK, SHOWN ON THESE SHEETS IS BASED ON LIMITED INVESTIGATIONS BY THE STATE AND IS IN NO WAY WARRANTED TO INDICATE THE CONDITIONS OF ACTUAL QUANTITIES OF WORK WHICH WILL BE REQUIRED.

Plotted: 7/28/2010

DESIGNER/DRAFTER: P. GILKEY
CHECKED BY: T. WALB
SCALE IN FEET 0 5 10
SCALE 1" = 5'

STATE OF CONNECTICUT
DEPARTMENT OF TRANSPORTATION

Filename: P:\General\Outgoing\ConnDOT\2010_0727-DEP Permit\Base-Data\XSC-003.dgn

SIGNATURE/BLOCK: URS CORPORATION AES
APPROVED BY: -
DATE: -

PROJECT TITLE: NEW BRITAIN - HARTFORD BUSWAY

TOWN: NEW BRITAIN

DRAWING TITLE: CROSS SECTIONS

PROJECT NO. 88-H035
DRAWING NO. XSC-104
SHEET NO. 604

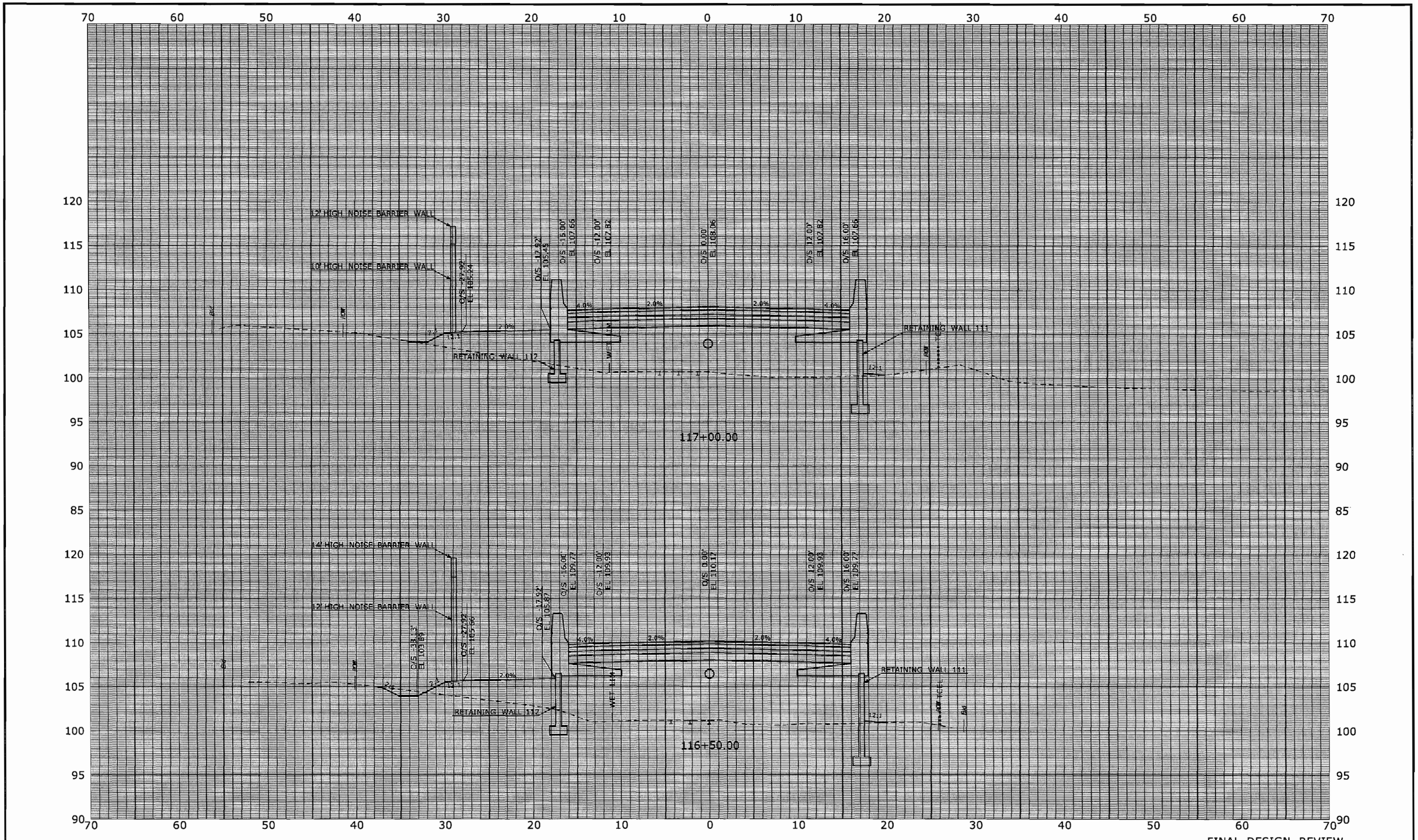

FINAL DESIGN REVIEW

REV.	DATE	REVISION DESCRIPTION	SHEET NO.

THE INFORMATION, INCLUDING ESTIMATED QUANTITIES OF WORK, SHOWN ON THESE SHEETS IS BASED ON LIMITED INVESTIGATIONS BY THE STATE AND IS IN NO WAY WARRANTED TO INDICATE THE CONDITIONS OF ACTUAL QUANTITIES OF WORK WHICH WILL BE REQUIRED.

Plotted: 7/28/2010

DESIGNER/DRAFTER: P. GILKEY
CHECKED BY: T. WALB
SCALE IN FEET 0 5 10
SCALE 1" = 5'

STATE OF CONNECTICUT
DEPARTMENT OF TRANSPORTATION

Filename: P:\General\Outgoing\Conn DOT\2010_0727-DEP Permit\Base-Data\XSC-003.dgn

SIGNATURE/BLOCK: URS CORPORATION AES
APPROVED BY: -
DATE: -

PROJECT TITLE: NEW BRITAIN - HARTFORD BUSWAY

TOWN: NEW BRITAIN

DRAWING TITLE: CROSS SECTIONS

PROJECT NO. 88-H035
DRAWING NO. XSC-105
SHEET NO. 605

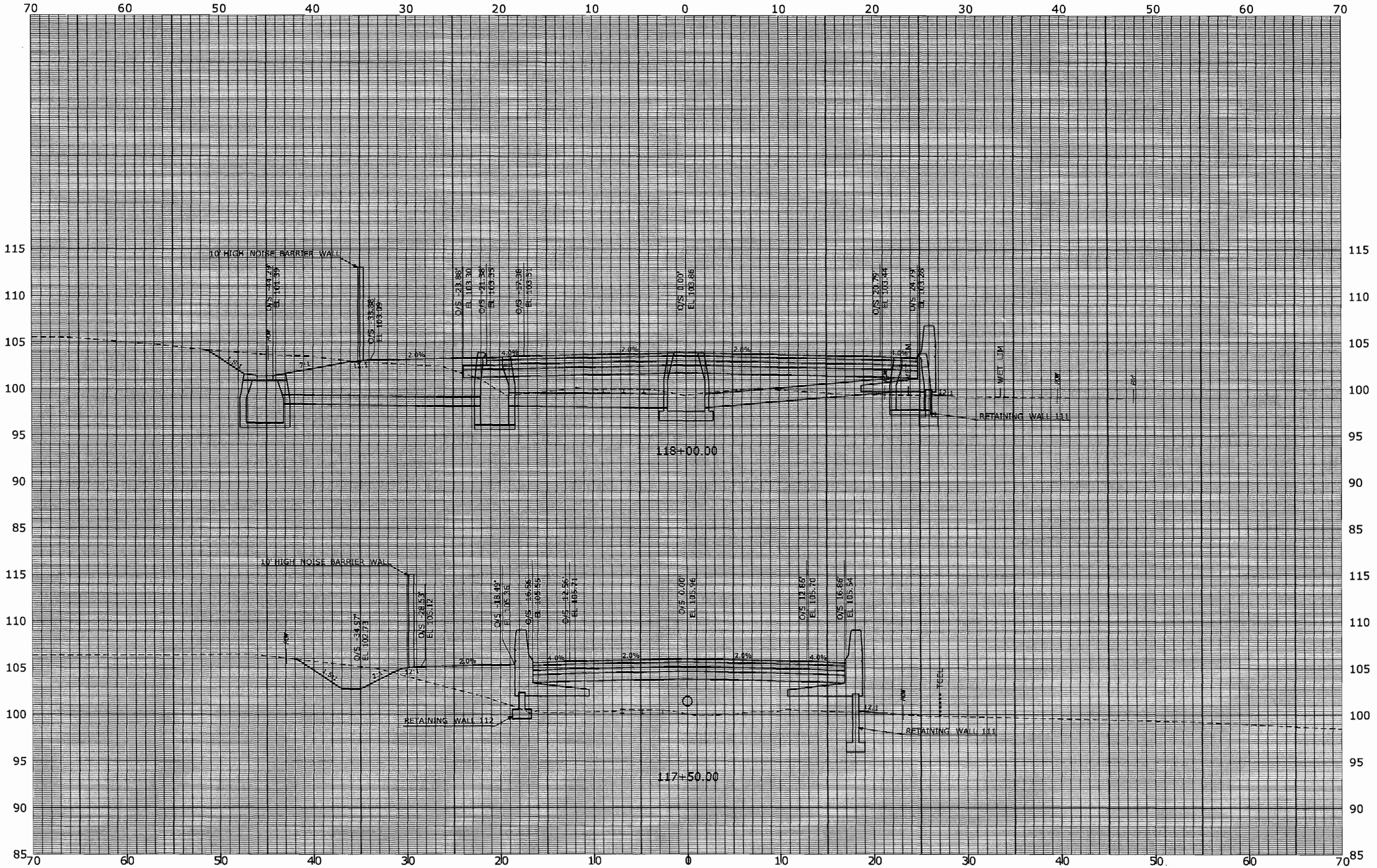

FINAL DESIGN REVIEW

REV.	DATE	REVISION DESCRIPTION	SHEET NO.

THE INFORMATION, INCLUDING ESTIMATED QUANTITIES OF WORK, SHOWN ON THESE SHEETS IS BASED ON LIMITED INVESTIGATIONS BY THE STATE AND IS IN NO WAY WARRANTED TO INDICATE THE CONDITIONS OF ACTUAL QUANTITIES OF WORK WHICH WILL BE REQUIRED.

Plotted: 7/28/2010

DESIGNER/DRAFTER: P. GILKEY
CHECKED BY: T. WALB
SCALE IN FEET
0 5 10
SCALE 1" = 5'

STATE OF CONNECTICUT
DEPARTMENT OF TRANSPORTATION

Filename: P:\General\Outgoing\ConnDOT\2010.0727-DEP Permit\Base-Data\XSC-003.dgn

SIGNATURE/BLOCK: URS CORPORATION AES
APPROVED BY: -
DATE: -

PROJECT TITLE: NEW BRITAIN - HARTFORD BUSWAY

TOWN: NEW BRITAIN
DRAWING TITLE: CROSS SECTIONS

PROJECT NO. 88-H035
DRAWING NO. XSC-106
SHEET NO. 606

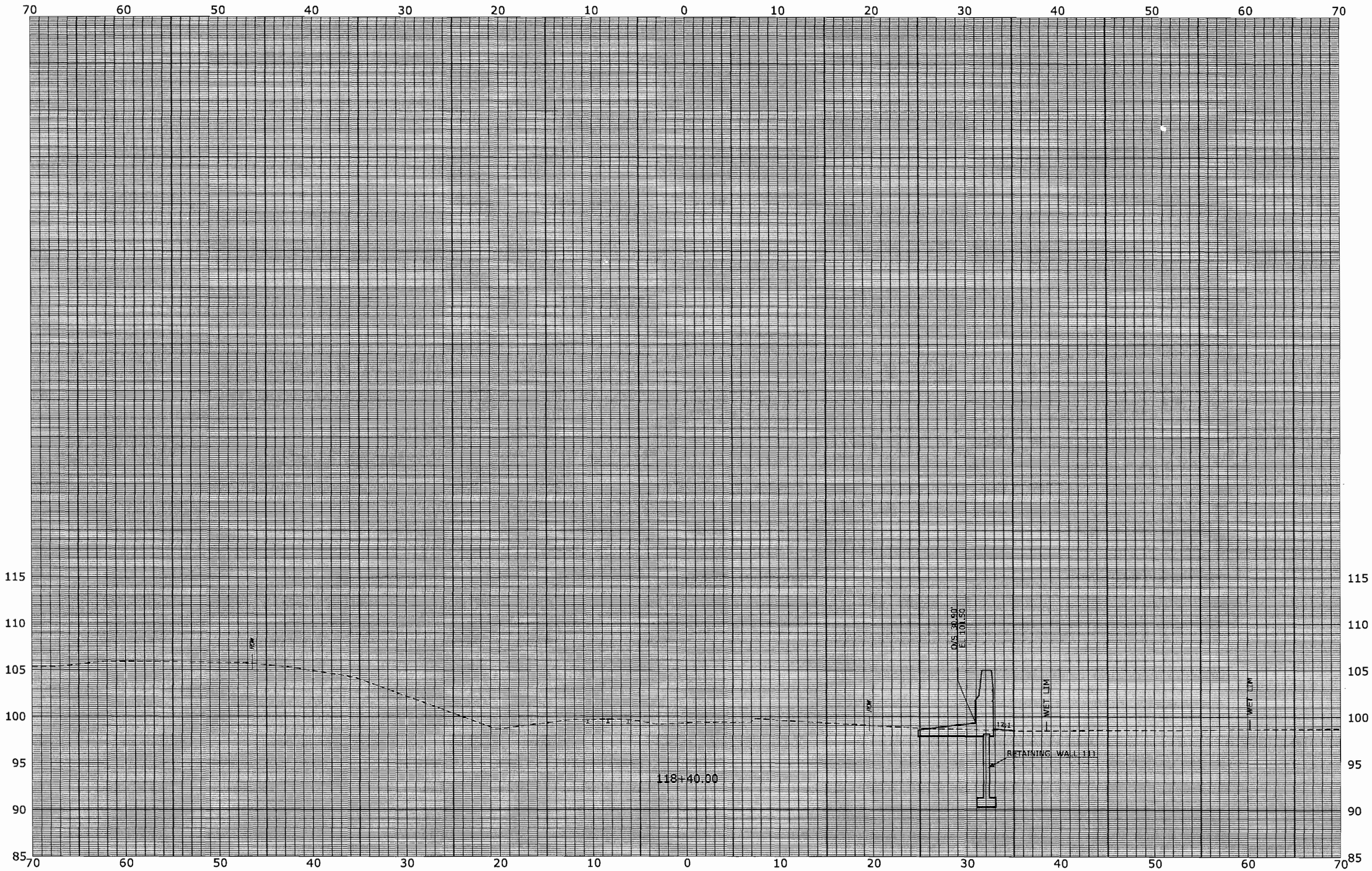

FINAL DESIGN REVIEW

REV.	DATE	REVISION DESCRIPTION	SHEET NO.

THE INFORMATION, INCLUDING ESTIMATED QUANTITIES OF WORK, SHOWN ON THESE SHEETS IS BASED ON LIMITED INVESTIGATIONS BY THE STATE AND IS IN NO WAY WARRANTED TO INDICATE THE CONDITIONS OF ACTUAL QUANTITIES OF WORK WHICH WILL BE REQUIRED.

Plotted: 7/28/2010

DESIGNER/DRAFTER: P. GILKEY

CHECKED BY: T. WALB

SCALE IN FEET 0 5 10

SCALE 1" = 5'

STATE OF CONNECTICUT
DEPARTMENT OF TRANSPORTATION

Filename: P:\General\Outgoing\ConnDOT\2010_0727-DEP_Permit\Base-Data\XSC-003.dgn

SIGNATURE/ BLOCK: URS CORPORATION AES

APPROVED BY: - DATE: -

PROJECT TITLE: NEW BRITAIN - HARTFORD BUSWAY

TOWN: NEW BRITAIN

DRAWING TITLE: CROSS SECTIONS

PROJECT NO. 88-H035

DRAWING NO. XSC-107

SHEET NO. 607

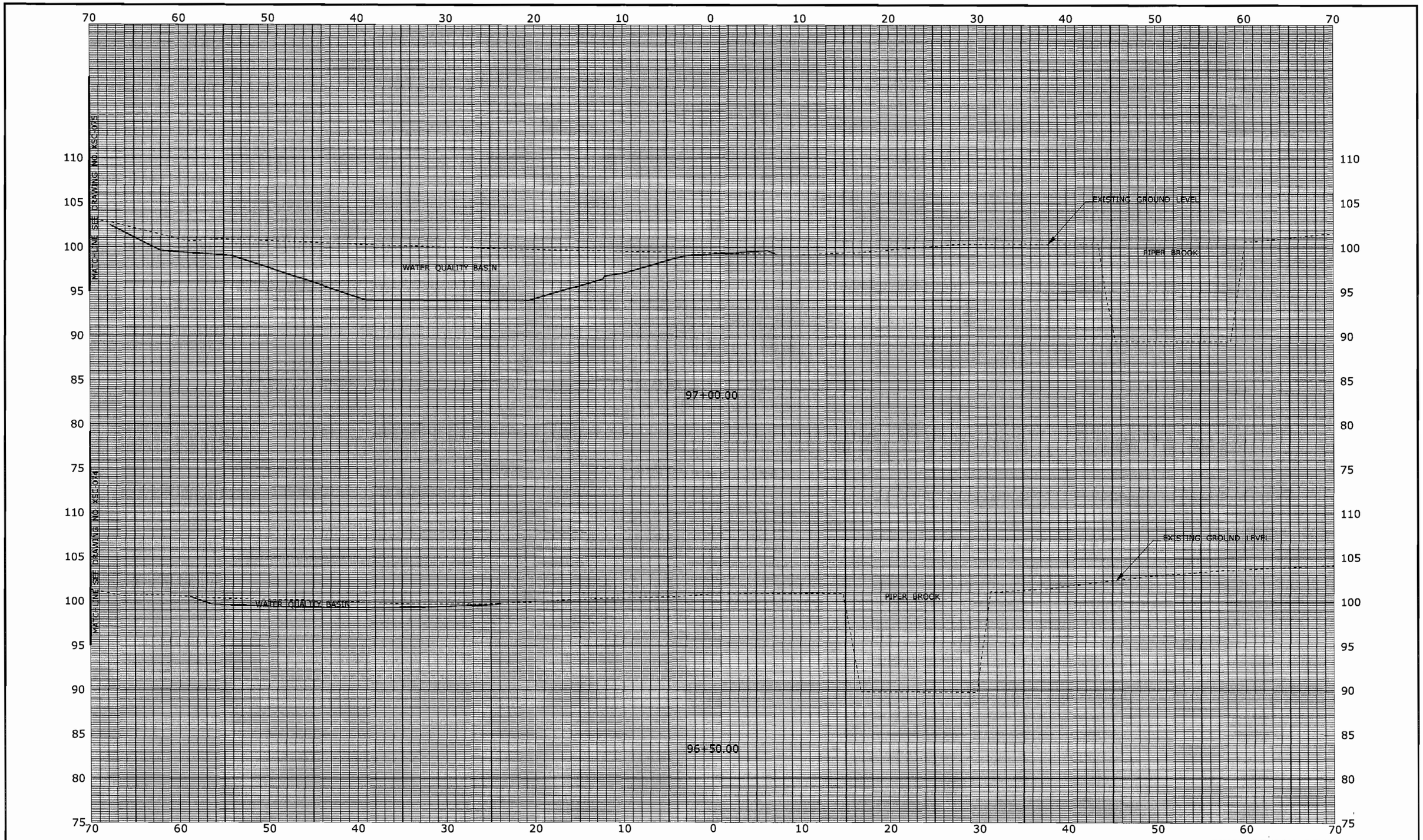

FINAL DESIGN REVIEW

REV.	DATE	REVISION DESCRIPTION	SHEET NO.
-	-	-	-
-	-	-	-
-	-	-	-
-	-	-	-
-	-	-	-
-	-	-	-

THE INFORMATION, INCLUDING ESTIMATED QUANTITIES OF WORK, SHOWN ON THESE SHEETS IS BASED ON LIMITED INVESTIGATIONS BY THE STATE AND IS IN NO WAY WARRANTED TO INDICATE THE CONDITIONS OF ACTUAL QUANTITIES OF WORK WHICH WILL BE REQUIRED.

Plotted: 7/28/2010

DESIGNER/DRAFTER: **P. GILKEY**

CHECKED BY: **T. WALB**

SCALE IN FEET

0 5 10

SCALE 1" = 5'

STATE OF CONNECTICUT
DEPARTMENT OF TRANSPORTATION

Filename: P:\General\Outgoing\ConnDOT\2010.0727-DEP Permit\Base-Data\XSC-003.dgn

SIGNATURE/ BLOCK: **URS CORPORATION AES**

APPROVED BY: - DATE: -

PROJECT TITLE: **NEW BRITAIN - HARTFORD BUSWAY**

TOWN: **NEW BRITAIN**

DRAWING TITLE: **CROSS SECTIONS**

PROJECT NO. **88-H035**

DRAWING NO. **XSC-165**

SHEET NO. **608**

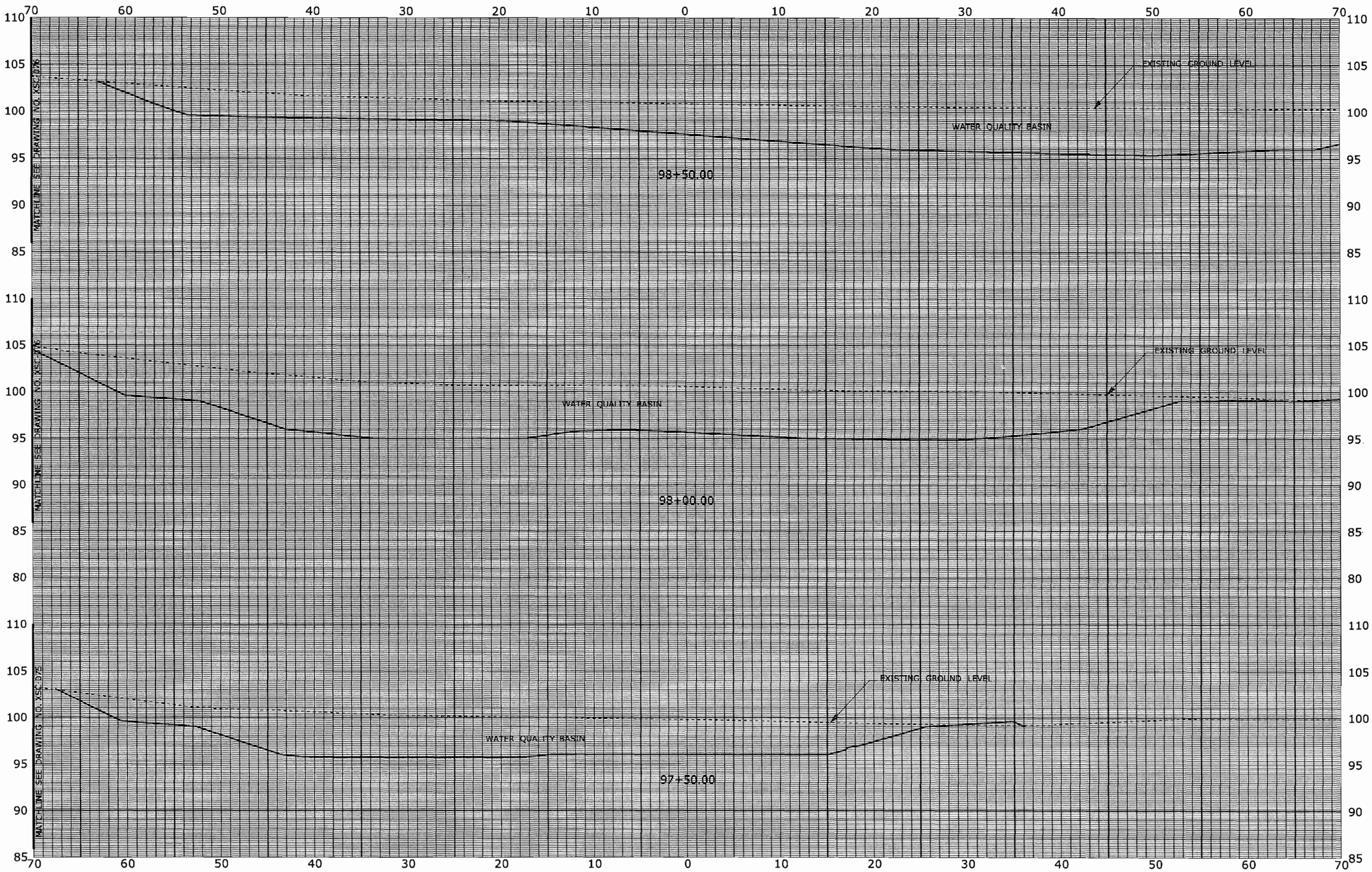

FINAL DESIGN REVIEW

REV.	DATE	REVISION DESCRIPTION	SHEET NO.
-	-	-	-
-	-	-	-
-	-	-	-
-	-	-	-
-	-	-	-
-	-	-	-

THE INFORMATION, INCLUDING ESTIMATED QUANTITIES OF WORK, SHOWN ON THESE SHEETS IS BASED ON LIMITED INVESTIGATIONS BY THE STATE AND IS IN NO WAY WARRANTED TO INDICATE THE CONDITIONS OF ACTUAL QUANTITIES OF WORK WHICH WILL BE REQUIRED.

Plotted: 7/28/2010

DESIGNER/DRAFTER: **P. GILKEY**
CHECKED BY: **T. WALB**
SCALE IN FEET 0 5 10
SCALE 1" = 5'

STATE OF CONNECTICUT
DEPARTMENT OF TRANSPORTATION

Filename: P:\General\Outgoing\ConnDOT\2010_0727-DEP Permit\Base-Data\XSC-003.dgn

SIGNATURE/BLOCK: **URS CORPORATION AES**
APPROVED BY: - DATE: -

PROJECT TITLE: **NEW BRITAIN - HARTFORD BUSWAY**

TOWN: **NEW BRITAIN**
DRAWING TITLE: **CROSS SECTIONS**

PROJECT NO. **88-H035**
DRAWING NO. **XSC-166**
SHEET NO. **609**

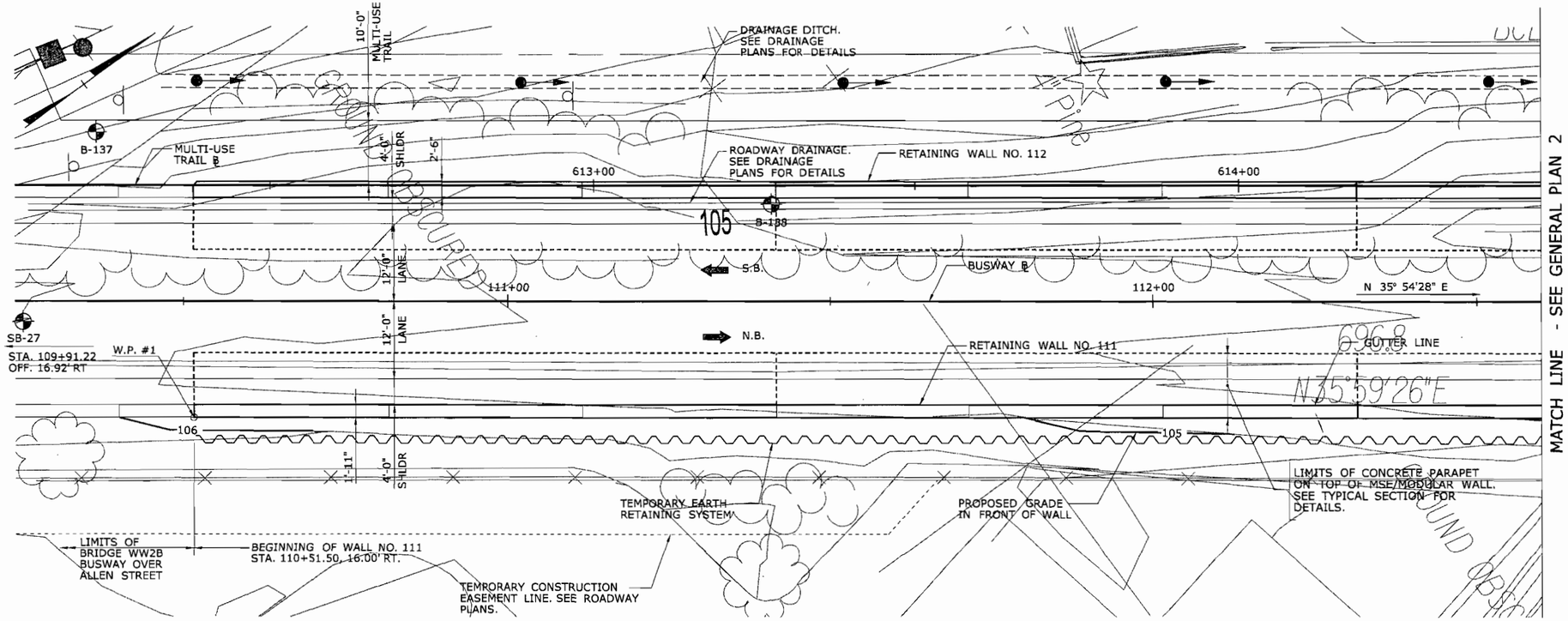

MATCH LINE - SEE GENERAL PLAN 2

GENERAL PLAN

SCALE: 1" = 10'

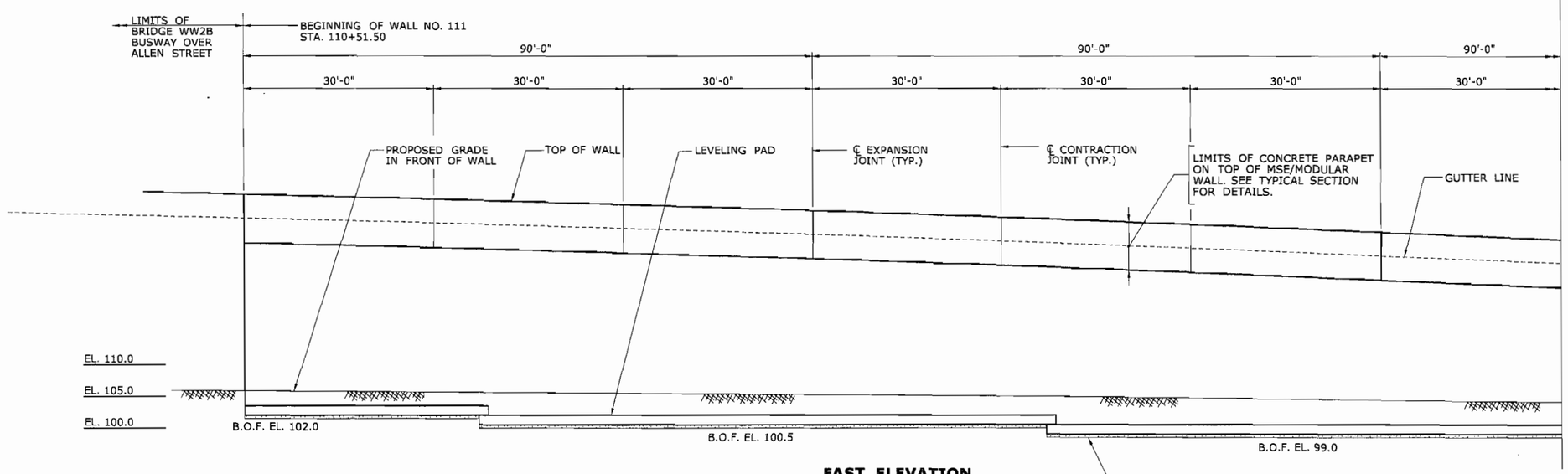

MATCH LINE - SEE ELEVATION 2

NOTE:
SEE DRAWING S-4 FOR TOP OF WALL ELEVATIONS

EAST ELEVATION

SCALE: 1" = 10'

GENERAL NOTES

SPECIFICATIONS: CONNECTICUT DEPARTMENT OF TRANSPORTATION FORM 816 (2004), SUPPLEMENTAL SPECIFICATIONS DATED JAN 2009 AND SPECIAL PROVISIONS

DESIGN SPECIFICATIONS: AASHTO LRFD BRIDGE DESIGN SPECIFICATIONS (4TH EDITION - 2007) WITH THE INTERIM SPECIFICATIONS UP TO AND INCLUDING 2008, AS SUPPLEMENTED BY THE CONNECTICUT DEPARTMENT OF TRANSPORTATION BRIDGE DESIGN MANUAL (2003).

DESIGN STRESSES:
CLASS "A" CONCRETE.....BASED ON f'c = 3,000 psi
REINFORCEMENT (ASTM A615, GRADE 60).....Fy = 60,000 psi

LIVE LOAD: NONE.

FOUNDATION PRESSURES: THE VARIOUS LIMIT STATES NOTED ON THESE PLAN SHEETS REFER TO THE LIMIT STATES AS GIVEN IN THE AASHTO LRFD BRIDGE DESIGN SPECIFICATIONS.

DIMENSIONS: ALL DIMENSIONS SHOWN ON THE PLANS ARE IN ENGLISH UNITS EXCEPT IF NOTED OTHERWISE. WHEN DECIMAL DIMENSIONS ARE GIVEN TO LESS THAN THREE DECIMAL PLACES, THE OMITTED DIGITS SHALL BE ASSUMED TO BE ZEROS.

WALL NOTES: SEE DRAWING NO. S-9.

CONCRETE NOTES

CLASS "A" CONCRETE: CLASS "A" CONCRETE SHALL BE USED FOR THE CAST-IN-PLACE CONCRETE PARAPET AND MOMENT SLAB.

JOINT SEAL: SEE SPECIAL PROVISIONS.

EXPOSED EDGES: EXPOSED EDGES OF CONCRETE SHALL BE BEVELED 1" X 1" UNLESS DIMENSIONED OTHERWISE.

CONCRETE COVER: ALL REINFORCEMENT SHALL HAVE 2" COVER UNLESS DIMENSIONED OTHERWISE.

REINFORCEMENT: ALL REINFORCEMENT SHALL BE ASTM A615, GRADE 60.

PREFORMED EXPANSION JOINT FILLER: THE COST OF FURNISHING AND INSTALLING PREFORMED EXPANSION JOINT FILLER SHALL BE INCLUDED IN THE LUMP SUM PRICE OF THE ITEM "RETAINING WALL (SITE NO. 15)".

CONSTRUCTION JOINTS: CONSTRUCTION JOINTS, OTHER THAN THOSE SHOWN ON THE PLANS, WILL NOT BE PERMITTED WITHOUT THE PRIOR APPROVAL OF THE ENGINEER.

RETAINING WALL (SITE NO. 15) QUANTITIES

ITEM	UNIT	QUANTITY
RETAINING WALL (SITE NO. 15)	L.S.	L.S.

FINAL DESIGN REVIEW

REV.	DATE	REVISION DESCRIPTION	SHEET NO.
-	-	-	-
-	-	-	-
-	-	-	-
-	-	-	-
-	-	-	-
-	-	-	-

THE INFORMATION, INCLUDING ESTIMATED QUANTITIES OF WORK, SHOWN ON THESE SHEETS IS BASED ON LIMITED INVESTIGATIONS BY THE STATE AND IS IN NO WAY WARRANTED TO INDICATE THE CONDITIONS OF ACTUAL QUANTITIES OF WORK WHICH WILL BE REQUIRED.

Plotted: 12/9/2009

DESIGNER/DRAFTER: YM
CHECKED BY: JG
SCALE AS NOTED

STATE OF CONNECTICUT
DEPARTMENT OF TRANSPORTATION

Filename: SFILES

SIGNATURE/BLOCK: GM2 ASSOCIATES, INC.
APPROVED BY: DATE:

PROJECT TITLE: NEW BRITAIN - HARTFORD BUSWAY

TOWN: NEW BRITAIN

DRAWING TITLE: GENERAL PLAN 1 RETAINING WALL NO. 111

PROJECT NO. 88-H035
DRAWING NO. S-1
SHEET NO. 412

SB_MSH_RW111_088_H035_GPN-1.dgn 12/9/2009 12:48:08 PM

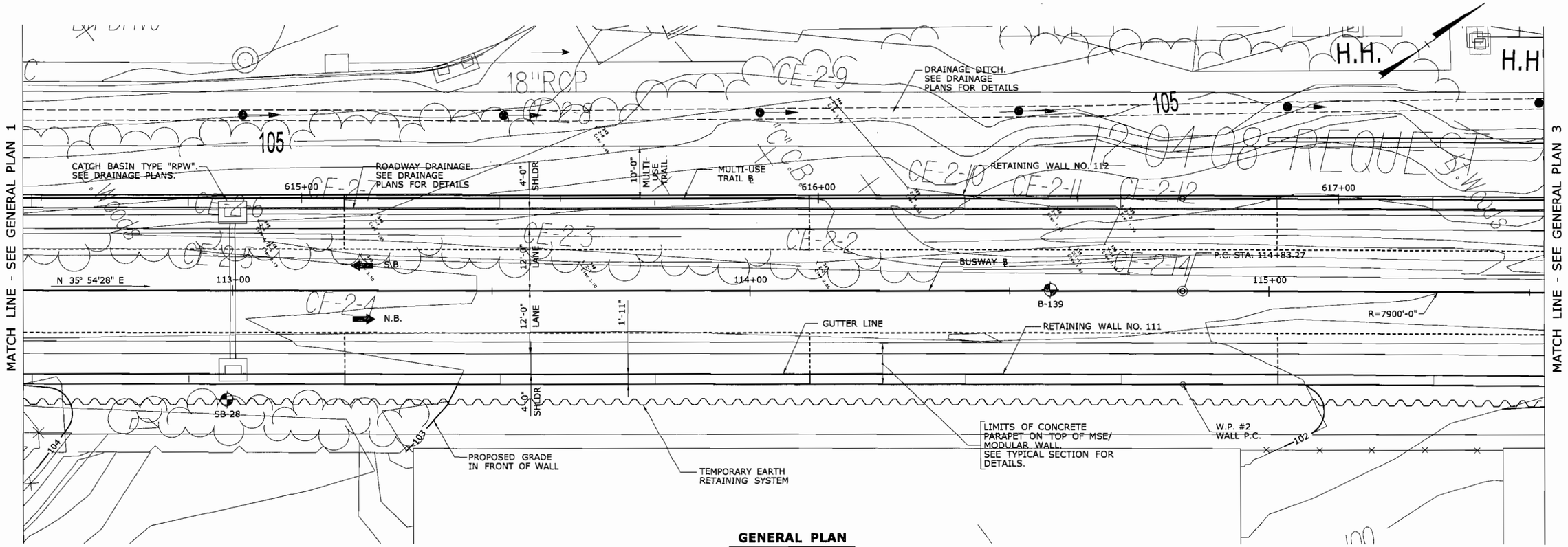

GENERAL PLAN

SCALE: 1" = 10'-0"

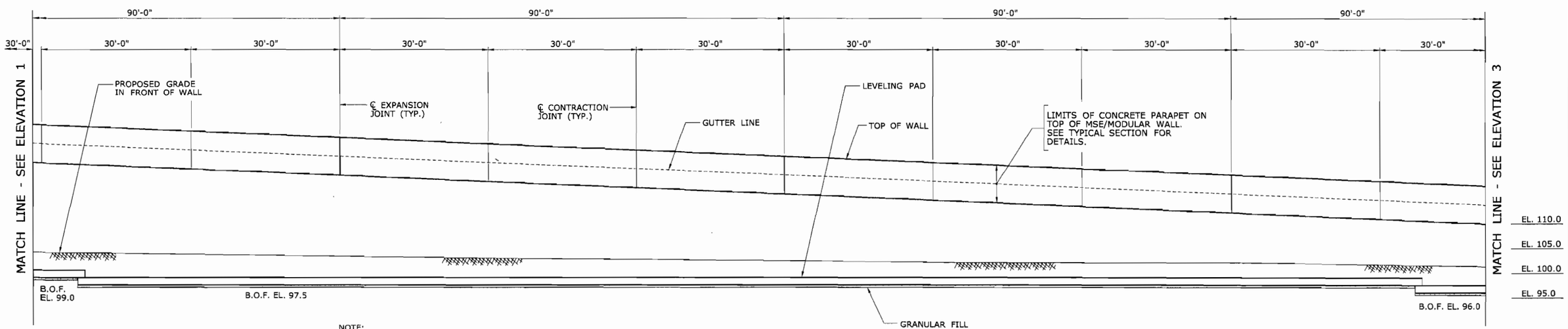

NOTE:
SEE DRAWING S-4 FOR TOP OF WALL ELEVATIONS

EAST ELEVATION

SCALE: 1" = 10'-0"

FINAL DESIGN REVIEW

REV.	DATE	REVISION DESCRIPTION	SHEET NO.
-	-	-	-
-	-	-	-
-	-	-	-
-	-	-	-
-	-	-	-
-	-	-	-

THE INFORMATION, INCLUDING ESTIMATED QUANTITIES OF WORK, SHOWN ON THESE SHEETS IS BASED ON LIMITED INVESTIGATIONS BY THE STATE AND IS IN NO WAY WARRANTED TO INDICATE THE CONDITIONS OF ACTUAL QUANTITIES OF WORK WHICH WILL BE REQUIRED.

Plotted: 12/9/2009

DESIGNER/DRAFTER: YM
CHECKED BY: JG
SCALE AS NOTED

STATE OF CONNECTICUT
DEPARTMENT OF TRANSPORTATION

Filename: $FILE$

SIGNATURE/ BLOCK: GM2 ASSOCIATES, INC.
APPROVED BY: DATE:

PROJECT TITLE: NEW BRITAIN - HARTFORD BUSWAY

TOWN: NEW BRITAIN

DRAWING TITLE: GENERAL PLAN 2 RETAINING WALL NO. 111

PROJECT NO. 88-H035
DRAWING NO. S-2
SHEET NO. 413

SB_MSH_RW111_088_H035_GPN-2.dgn 12/9/2009 12:48:11 PM

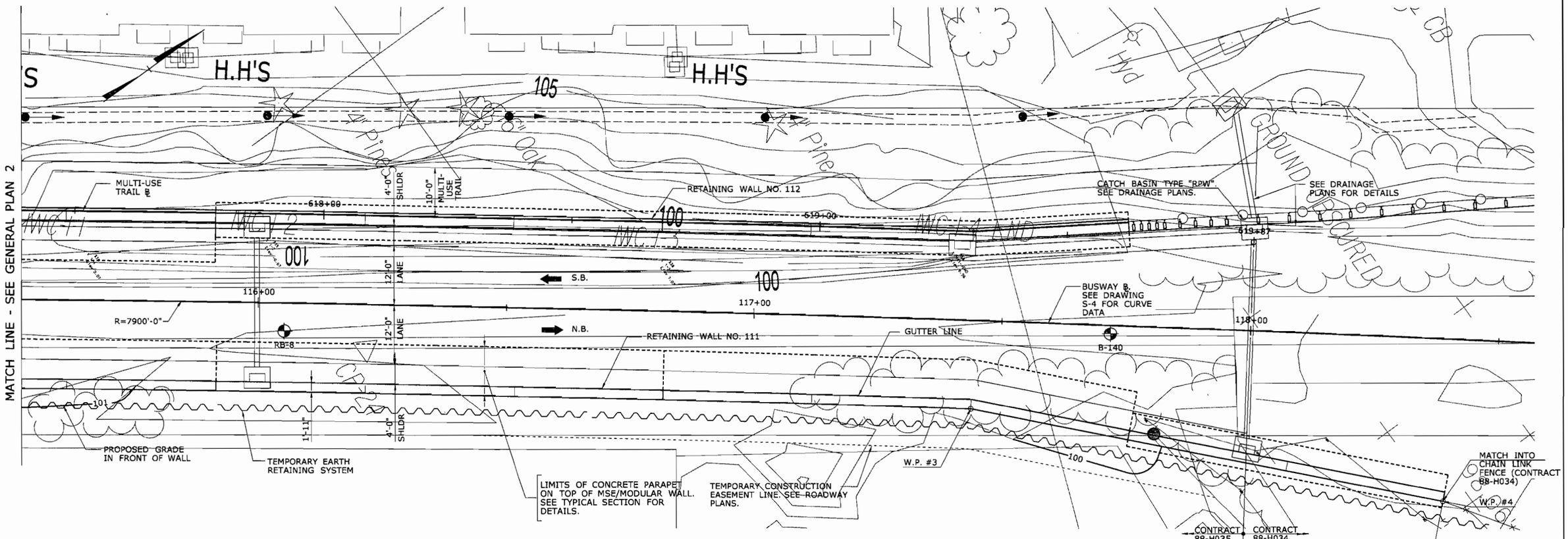

GENERAL PLAN

SCALE: 1" = 10'-0"

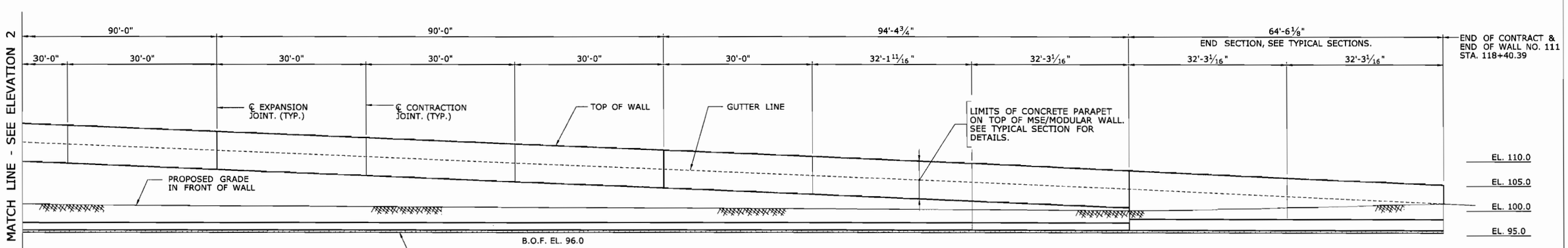

NOTE:
SEE DRAWING S-4 FOR TOP OF WALL ELEVATIONS

EAST ELEVATION

SCALE: 1" = 10'-0"

FINAL DESIGN REVIEW

REV.	DATE	REVISION DESCRIPTION	SHEET NO.
			-
			-
			-
			-
			-
			-

THE INFORMATION, INCLUDING ESTIMATED QUANTITIES OF WORK, SHOWN ON THESE SHEETS IS BASED ON LIMITED INVESTIGATIONS BY THE STATE AND IS IN NO WAY WARRANTED TO INDICATE THE CONDITIONS OF ACTUAL QUANTITIES OF WORK WHICH WILL BE REQUIRED.

Plotted: 7/28/2010

DESIGNER/DRAFTER: YM
CHECKED BY: JG
SCALE AS NOTED

STATE OF CONNECTICUT
DEPARTMENT OF TRANSPORTATION

Filename: $FILE$

SIGNATURE/BLOCK: GM2 ASSOCIATES, INC.
APPROVED BY: DATE:

PROJECT TITLE: NEW BRITAIN - HARTFORD BUSWAY

TOWN: NEW BRITAIN

DRAWING TITLE: GENERAL PLAN 3 RETAINING WALL NO. 111

PROJECT NO. 88-H035
DRAWING NO. S-3
SHEET NO. 414

SB_MSH_RW111_088_H035_GPN-3.dgn 7/28/2010 2:10:35 PM

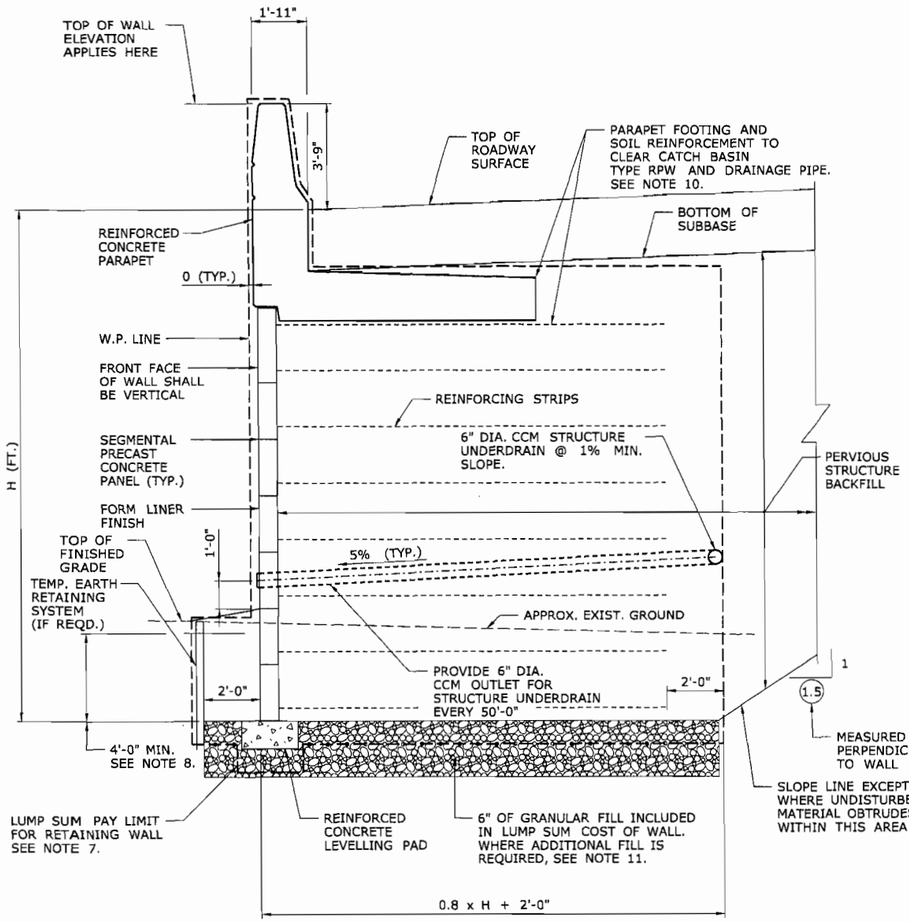

MECHANICALLY STABILIZED EARTH

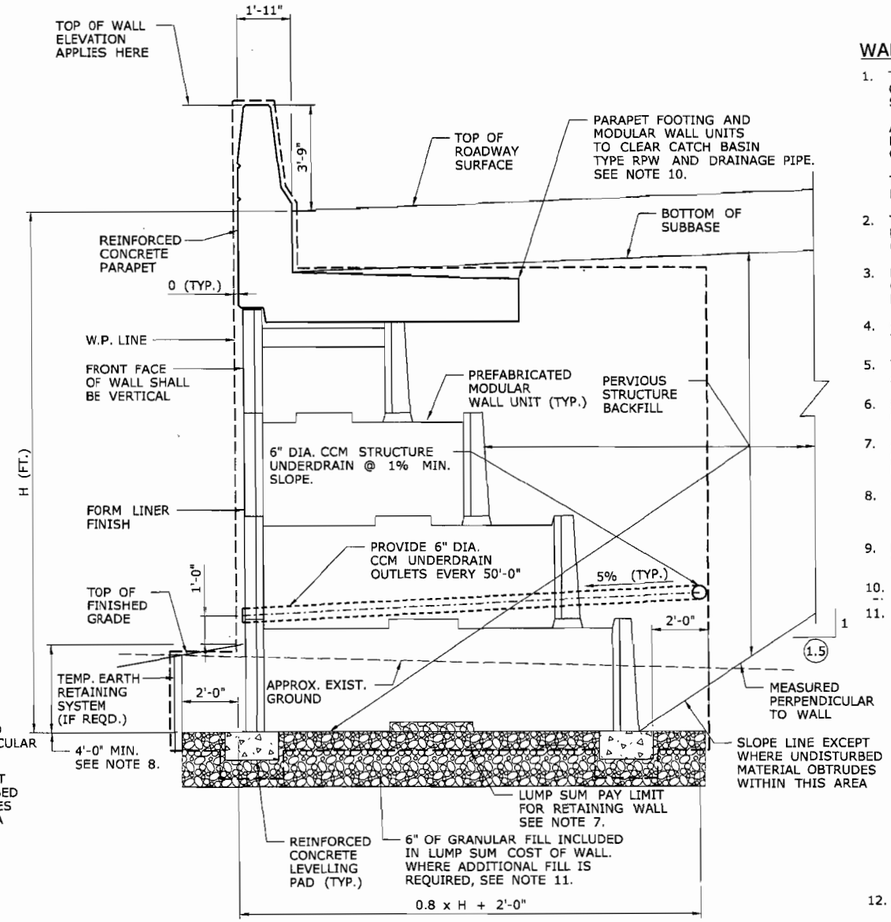

PREFABRICATED MODULAR WALL

ALTERNATE WALL SECTIONS

SCALE: 3/8" = 1'-0"

WALL NOTES

1. THE CONTRACTOR SHALL SELECT, DESIGN, AND CONSTRUCT ONE OF THE FOLLOWING WALL OPTIONS IN ACCORDANCE WITH THE SPECIAL PROVISION "RETAINING WALL (SITE NO. 15)":

   A. DOUBLEWAL BY DOUBLEWAL CORPORATION
   B. T-WALL RETAINING WALL SYSTEM BY THE NEEL COMPANY
   C. REINFORCED EARTH WALLS BY THE REINFORCED EARTH COMPANY

   THE CONTRACTOR SHALL PROVIDE THE SAME WALL OPTION FOR RETAINING WALL (SITE NO. 15) AND RETAINING WALL (SITE NO. 16).

2. THE DESIGN BEARING PRESSURE ON EXISTING SOIL/GRANULAR FILL PREPARED AS PER THE FOUNDATION PREPARATION GUIDELINES OUTLINED BELOW IS 7 ksf

3. DETAILS SHOWN ON THIS SHEET ARE NOT SPECIFIC. THE CONTRACTOR'S DESIGNER SHALL MODIFY EACH SECTION FOR EACH SPECIFIC SITE.

4. CONCRETE PARAPETS AND MOMENT SLABS SHALL BE INCLUDED IN THE LUMP SUM PAY ITEM "RETAINING WALL (SITE NO. 15)".

5. THE DETAILING AND REINFORCEMENT OF THE PARAPET SECTION ABOVE THE GUTTER LINE SHALL BE AS SHOWN IN THE TYPICAL SECTIONS.

6. REINFORCING SHALL HAVE 2" COVER EXCEPT WHERE SHOWN OTHERWISE. ALL REINFORCING SHALL BE EPOXY COATED.

7. ANY ADDITIONAL PERVIOUS STRUCTURE BACKFILL REQUIRED OUTSIDE THIS LIMIT SHALL ALSO BE INCLUDED IN THE LUMP SUM PRICE.

8. WHERE A REINFORCED CONCRETE FOOTING IS PROVIDED UNDER THE FRONT AND BACK OF THE MODULE, THE EMBEDMENT SHALL BE MEASURED TO THE BOTTOM OF THE FOOTINGS.

9. FOR ARCHITECTURAL DETAILS INCLUDING FORM LINER, SEE DRAWING NO. S-11.

10. FOR CATCH BASIN TYPE RPW AND PIPE, SEE DRAINAGE DRAWINGS.

11. FOUNDATION PREPARATION:
    A. THE FOUNDATION FOR THE STRUCTURE SHALL BE GRADED LEVEL FOR A WIDTH EQUAL TO THE LENGTH OF SOIL REINFORCEMENT, OR BOTTOM MODULE, OR LIMITS OF GRANULAR FILL AS REQUIRED, WHICHEVER IS GREATEST.
    B. PRIOR TO WALL CONSTRUCTION, THE SUBGRADE SHALL BE PROOF ROLLED WITH A 10 TO 20 TON VIBRATORY ROLLER UNDER THE DIRECTION OF A QUALIFIED GEOTECHNICAL ENGINEER. THIS IS INCLUDED IN THE LUMP-SUM COST OF THE WORK.
    C. IF THE SOILS ARE NOT DETERMINED TO BE FIRM AND UNYIELDING BENEATH THE LOAD OF THE ROLLER, REMOVAL AND RECOMPACTION OF THE SOIL AND/OR REPLACEMENT WITH GRANULAR FILL MAY BE REQUIRED. THE EXTENT OF OVER-EXCAVATION AND REPLACEMENT/RECOMPACTION SHALL BE DETERMINED DURING CONSTRUCTION AND WILL BE EXTRA WORK.
    D. IF EXISTING SOILS BELOW THE SUBGRADE ELEVATIONS ARE DETERMINED TO BE EITHER ORGANIC OR OVER-SATURATED, OVER-EXCAVATION TO A MORE SUITABLE LAYER WILL BE REQUIRED. OVER-EXCAVATION WILL BE PAID AS EXTRA.
    E. WHERE SILTS AND/OR SANDY SOILS ARE ENCOUNTERED AT THE SUBGRADE ELEVATION, THE CONTRACTOR SHALL NOT WORK DURING ADVERSE WEATHER, MAINTAIN POSITIVE DRAINAGE DURING CONSTRUCTION AND SHALL NOT LEAVE THE SUBBASE SOIL EXPOSED FOR EXTENDED PERIODS.

12. ANY TEMPORARY EARTH RETAINING SYSTEM THAT IS REQUIRED TO CONSTRUCT THE WALL IS INCLUDED IN THE LUMP SUM COST OF THE WALL.

FINAL DESIGN REVIEW

REV.	DATE	REVISION DESCRIPTION	SHEET NO.

THE INFORMATION, INCLUDING ESTIMATED QUANTITIES OF WORK, SHOWN ON THESE SHEETS IS BASED ON LIMITED INVESTIGATIONS BY THE STATE AND IS IN NO WAY WARRANTED TO INDICATE THE CONDITIONS OF ACTUAL QUANTITIES OF WORK WHICH WILL BE REQUIRED.

Plotted: 12/9/2009

DESIGNER/DRAFTER: YM
CHECKED BY: JG
SCALE AS NOTED

STATE OF CONNECTICUT
DEPARTMENT OF TRANSPORTATION

Filename: $FILE$

SIGNATURE/BLOCK: GM2 ASSOCIATES, INC.
APPROVED BY: DATE:

PROJECT TITLE: NEW BRITAIN - HARTFORD BUSWAY

TOWN: NEW BRITAIN

DRAWING TITLE: WALL DETAILS 1 RETAINING WALL NO. 111

PROJECT NO. 88-H035
DRAWING NO. S-9
SHEET NO. 420

SB_MSH_RW111_088_H035_DET-1.dgn 12/9/2009 12:48:35 PM

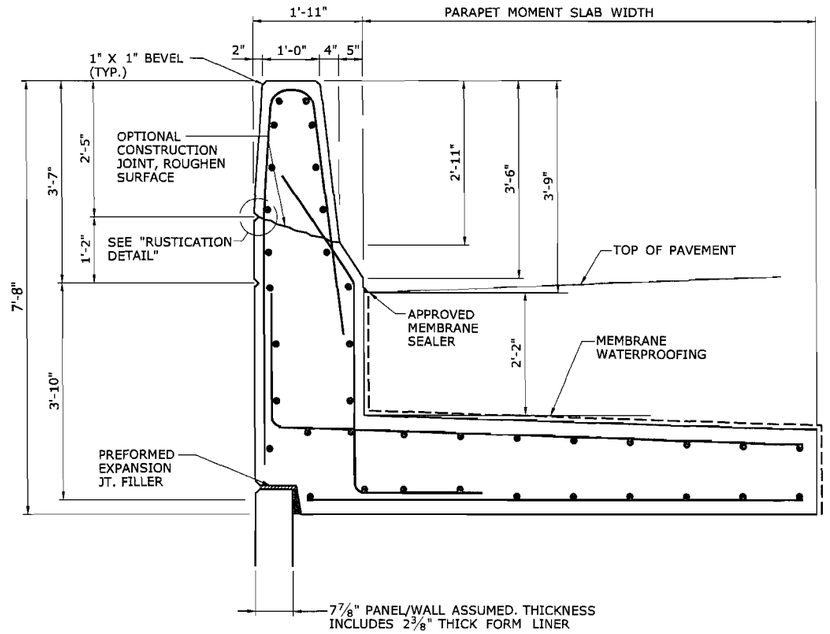

CONCRETE PARAPET DETAIL

SCALE: 3/4" = 1'-0"

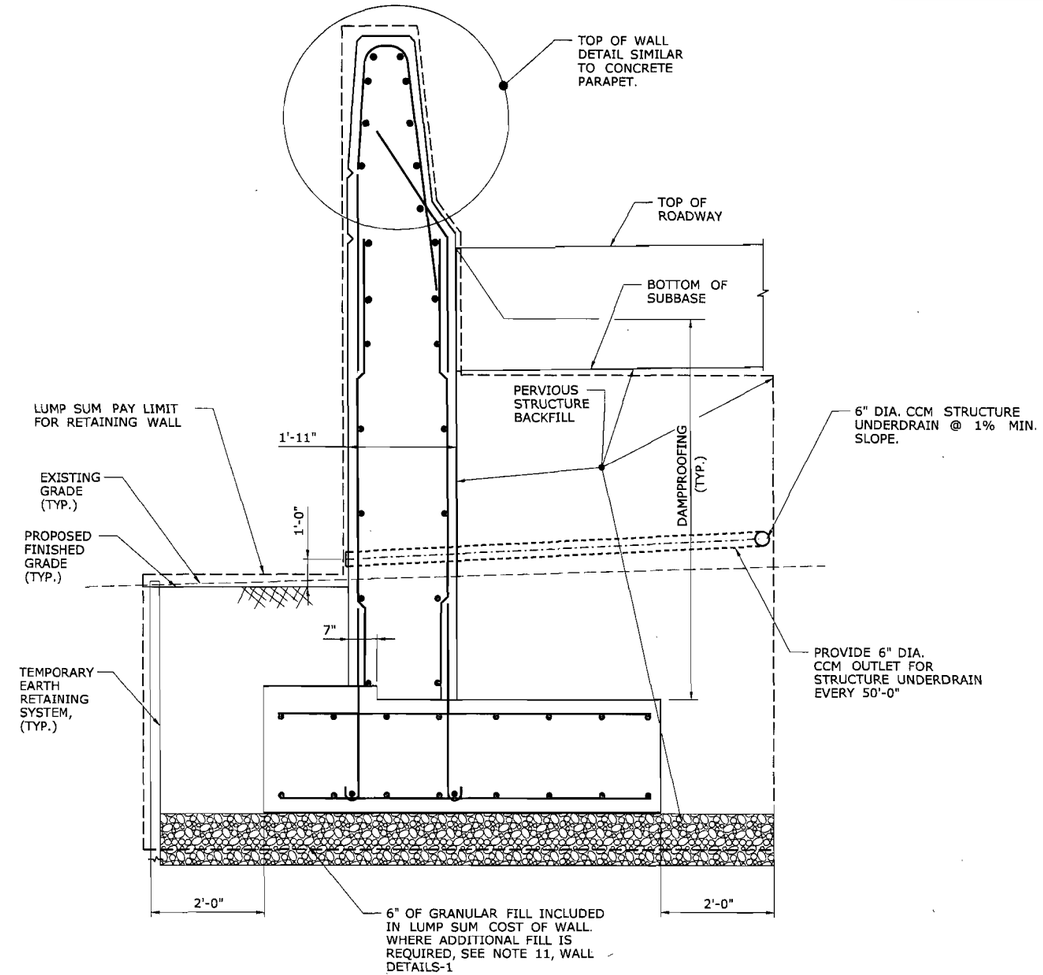

END SECTION DETAIL

SCALE: 3/4" = 1'-0"

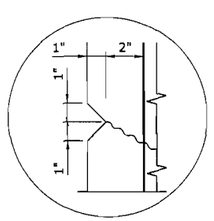

RUSTICATION DETAIL

N.T.S.

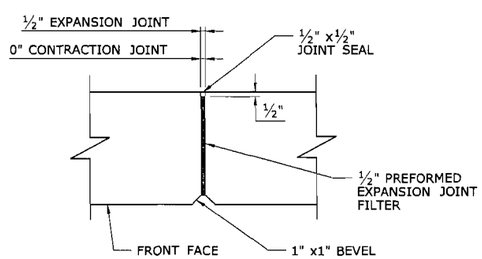

VERTICAL STEM JOINT DETAIL

N.T.S

NOTES:

1. NO REINFORCEMENT SHALL PASS THROUGH EXPANSION OR CONTRACTION JOINTS. REINFORCEMENTS SHALL PASS THROUGH CONSTRUCTION JOINTS.
2. JOINT SEAL TO EXTEND FROM TOP OF FOOTING TO TOP OF PARAPET AND HORIZONTALLY ALONG THIS JOINT TO OUTSIDE FACE OF PARAPET AND HORIZONTALLY ALONG THIS JOINT TO OUTSIDE FACE OF WALL.

FINAL DESIGN REVIEW

REV.	DATE	REVISION DESCRIPTION	SHEET NO.

THE INFORMATION, INCLUDING ESTIMATED QUANTITIES OF WORK, SHOWN ON THESE SHEETS IS BASED ON LIMITED INVESTIGATIONS BY THE STATE AND IS IN NO WAY WARRANTED TO INDICATE THE CONDITIONS OF ACTUAL QUANTITIES OF WORK WHICH WILL BE REQUIRED.

Plotted: 12/9/2009

DESIGNER/DRAFTER: YM
CHECKED BY: JG
SCALE AS NOTED

STATE OF CONNECTICUT
DEPARTMENT OF TRANSPORTATION

Filename: $FILE$

SIGNATURE/BLOCK: GM2 ASSOCIATES, INC.
APPROVED BY: DATE:

PROJECT TITLE: NEW BRITAIN - HARTFORD BUSWAY

TOWN: NEW BRITAIN
DRAWING TITLE: WALL DETAILS 2 RETAINING WALL NO. 111

PROJECT NO. 88-H035
DRAWING NO. S-10
SHEET NO. 421

SB_MSH_RW111_O88_H035_DET-2.dgn 12/9/2009 12:48:38 PM