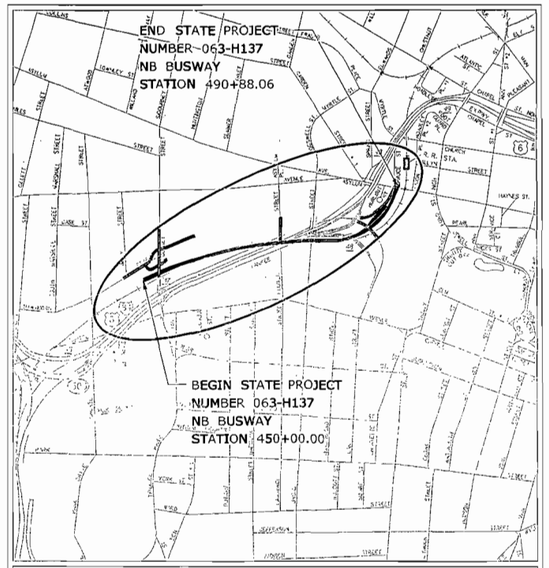

LOCATION PLAN

SCALE IN FEET

1000 0 1000 2000

CONNECTICUT DEPARTMENT OF TRANSPORTATION PLAN

FOR

NEW BRITAIN TO HARTFORD BUSWAY HARTFORD-NORTH SEGMENT

IN THE CITY OF

HARTFORD

63-H137

FROM STA. 450+00.00 TO STA. 490+54.89

LENGTH 4055 FT.

DESIGN SCALES
- PLAN 1 in. = 40 FT.
- PROFILE HOR. 1 in. = 40 FT., VERT. 1 in. = 4 FT.
- CROSS SECTIONS 1 in. = 5 FT.

OTHER SCALES AS NOTED

TO BE MAINTAINED BY STATE OF CONNECTICUT

FEDERAL AID PROJECT NO. _____

RECEIVED
AUG 12 2010
INLAND WATER RESOURCES DIVISION

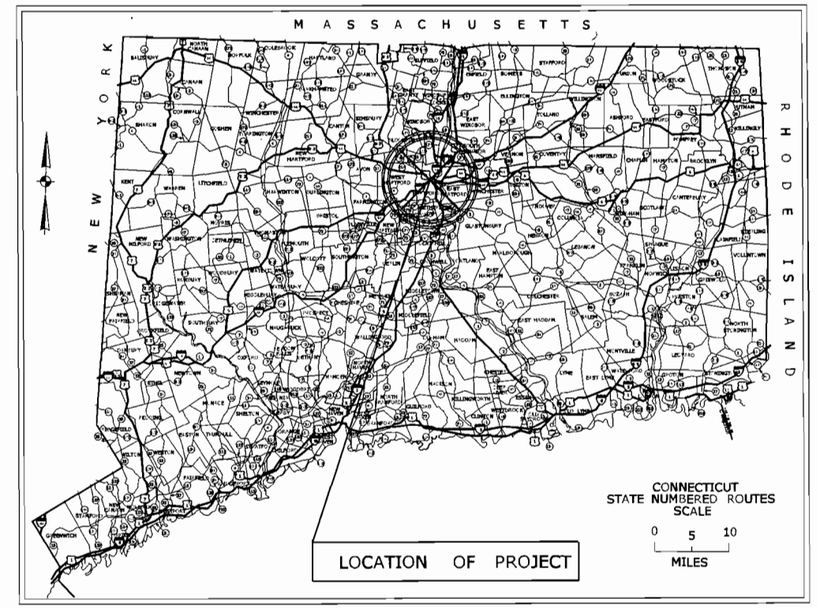

2004 SPECIFICATIONS, FORM 816 GOVERN INCLUDING SUPPLEMENT THERE TO DATED JANUARY 2010

ALL ELEVATIONS ON THIS PROJECT BASED ON NGVD OF 1929
COORDINATES BASED ON CONNECTICUT COORDINATE SYSTEM NAD 1983
CONNECTICUT HIGHWAY DESIGN MANUAL (2003)
POLICY ON GEOMETRIC DESIGN OF HIGHWAYS AND STREETS (1994)

TOWN NO. 063

PROJECT NO. H137

LIST OF DRAWINGS

SHEET NO.	DRAWING NO.	DRAWING TITLE
		TITLE SHEET
02 - 18	TYP-01 THROUGH TYP-17	TYPICAL SECTIONS
19 - 24	GRA-01 THROUGH GRA-06	GRADING PLANS
25 - 29	HWY-01 THROUGH HWY-05	ROADWAY PLANS
30 - 37	PRO-01 THROUGH PRO-08	ROADWAY PROFILES
38 - 42	DRN-01 THROUGH DRN-05	DRAINAGE AND SEDIMENTATION & EROSION CONTROL PLANS
43 - 48	MDS-01 THROUGH MDS-07	DRAINAGE AND SEDIMENTATION & EROSION CONTROL DETAILS

CONNECTICUT DEPARTMENT OF TRANSPORTATION BIDDING AND OTHER INFORMATION AND DOCUMENTS WHICH ARE OBTAINED THROUGH THE INTERNET WORLD WIDE WEB SITES OR OTHER SOURCES ARE NOT TO BE CONSTRUED TO BE OFFICIAL INFORMATION FOR THE PURPOSES OF BIDDING OR CONDUCTING OTHER BUSINESS WITH THE DEPARTMENT.

IT IS THE RESPONSIBILITY OF EACH BIDDER AND ALL OTHER INTERESTED PARTIES TO OBTAIN ALL BIDDING RELATED INFORMATION AND DOCUMENTS FROM OFFICIAL SOURCES WITHIN THE DEPARTMENT.

PERSONS AND/OR ENTITIES WHICH REPRODUCE AND/OR MAKE SUCH INFORMATION AVAILABLE BY ANY MEANS ARE NOT AUTHORIZED BY THE DEPARTMENT TO DO SO AND MAY BE LIABLE FOR CLAIMS RESULTING FROM THE DISSEMINATION OF UNOFFICIAL, INCOMPLETE AND/OR INACCURATE INFORMATION.

STANDARD CONVENTIONS

North Arrow W/No. Coor.
Grid Arrow
Edge Of Road
Concrete Pavement
Dirt Road
B.C.L.C.
Granite Curb
Guide Rail
Concrete Median Barrier
Bit. Walk
Conc. Sidewalk
Railroad Tracks
Chain Link Fence
Rustic Fence
Pipe Fence
Board Fence
Water Edge
Stream
Ditch
TOWN LINE
Limit Of Marsh
Stone Wall
Ledge Outcrop
Inland Wetland Limits
STATE LINE
Power Line
Swamp
Building
Transmission Tower
Riprap
Hedge Row
Tree Line
Shrub
Evergreen Tree
Deciduous Tree
Retaining Wall
Highway Line
Street Line
Property Line
Lot Line
Easement Line

DESIGNED BY:
H. W. LOCHNER, INC.
CONSULTING ENGINEERS

STATE OF CONNECTICUT
RICHARD A. BRAY
No. 17625
LICENSED
PROFESSIONAL ENGINEER

8/2/10

PERMIT SUBMISSION PLANS - NOT FOR CONSTRUCTION
AUGUST 2, 2010

F.H.W.A. REGION NO.	STATE	TOWN(S)	FED. AID PROJ. NO.	PROJ. NO.	YEAR	ROUTE NO.	SHEET NO.	TOTAL SHEETS
1	CONN.	HARTFORD		063-H137	2010		1	

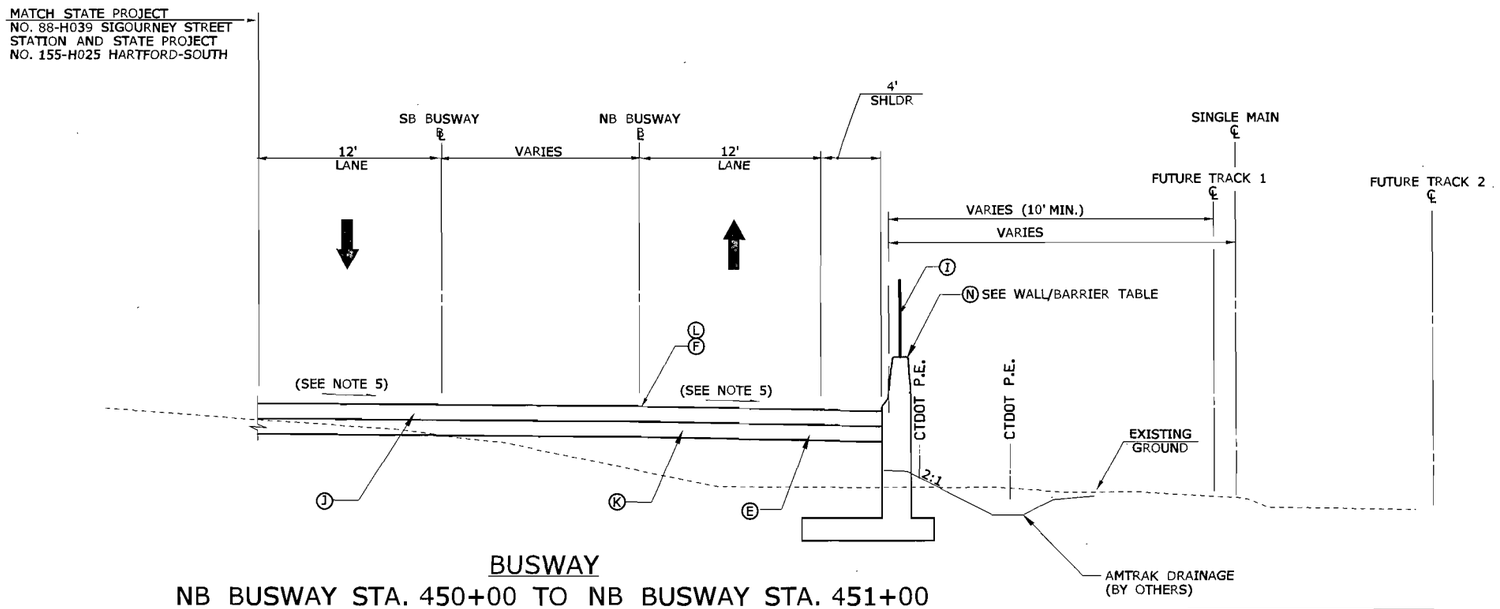

BUSWAY

NB BUSWAY STA. 450+00 TO NB BUSWAY STA. 451+00
SB BUSWAY STA. 803+57 TO SB BUSWAY STA. 804+57
AND
NB BUSWAY STA 452+72 TO NB BUSWAY STA 453+11
SB BUSWAY STA 806+30 TO SB BUSWAY STA 806+69

RETAINING WALL/BARRIER TABLE		
FROM STA.	TO STA.	TYPE
450+00	---+--	RET. WALL (155-H025)
452+64	459+00	RETAINING WALL 102

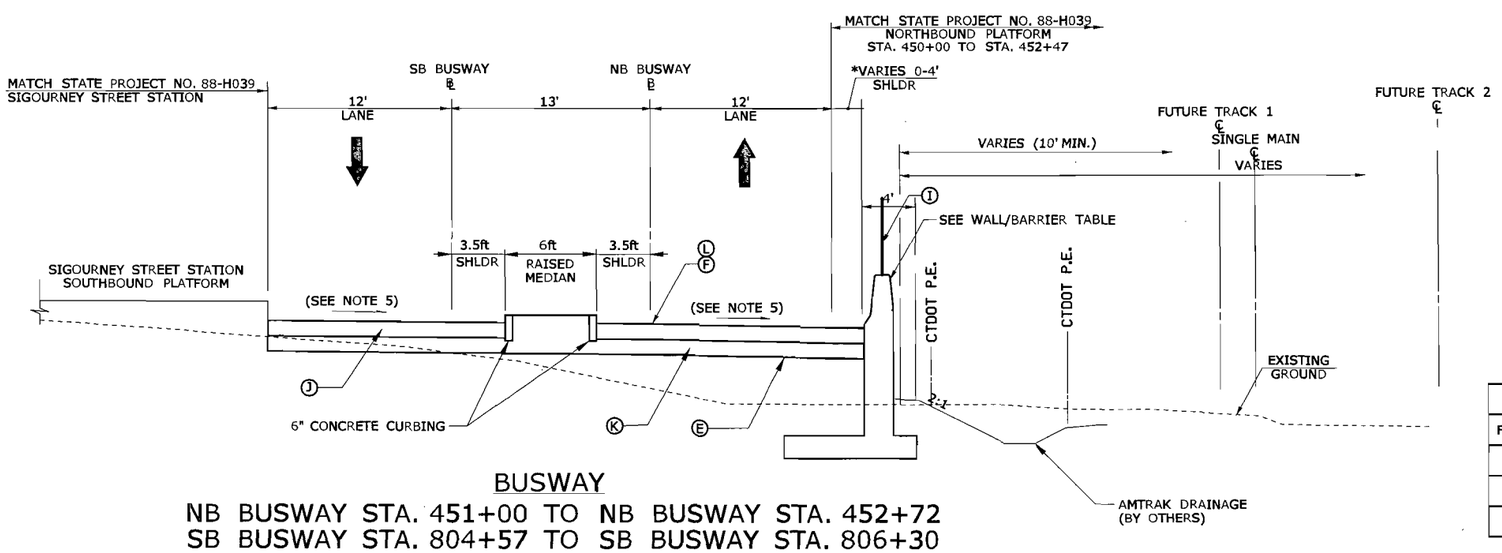

BUSWAY

NB BUSWAY STA. 451+00 TO NB BUSWAY STA. 452+72
SB BUSWAY STA. 804+57 TO SB BUSWAY STA. 806+30

*4' TO 0' FROM NB STA 451+24 TO NB STA 451+44
0' TO 4' FROM NB STA 452+44TO NB STA. 452+64

RETAINING WALL/BARRIER TABLE		
FROM STA.	TO STA.	TYPE
451+00	---+--	RET. WALL (155-H025)
---+--	---+--	RET. WALL (88-H039)
452+64	459+00	RETAINING WALL 102

LEGEND

- (A) 4.50" HMA S0.5 (PLACED IN 1.50" LIFTS)
- (B) 6" HMA S1
- (C) 6" PROCESSED AGGREGATE BASE
- (D) 10" SUBBASE
- (E) FORMATION OF SUBGRADE
- (F) POINT OF BANK APPLICATION
- (G) PRECAST CONCRETE BARRIER CURB (SEE PLANS FOR TYPE AND LIMITS)
- (H) TURF ESTABLISHMENT
- (I) 6' CHAIN LINK FENCE (BRIDGE)
- (J) 13" CONCRETE FOR PAVEMENT
- (K) 12" SUBBASE
- (L) POINT OF APPLICATION OF GRADE
- (M) CONCRETE STATION PLATFORM (FOR INFORMATION ONLY)
- (O) CONCRETE CAP AND GRANULAR FILL
- (P) CONCRETE SIDEWALK (SEE PLANS FOR LIMITS)
- (Q) 6" CONCRETE CURBING
- (R) METAL BEAM RAIL (SEE WALL/BARRIER TABLE)
- (S) GRANITE CURB (SEE PLANS FOR LIMITS)
- (T) 6" UNDERDRAIN (SEE PLANS FOR LIMITS)
- (U) FURNISH AND PLACE TOPSOIL
- (V) CAST IN PLACE CONCRETE CURB
- (W) REMOVE AND RESET GRANITE CURB
- (X) BITUMINOUS CONCRETE ISLAND (SEE NOTE 6)
- (Z) TACK COAT
- DIRECTION OF TRAVEL UP STATION
- DIRECTION OF TRAVEL DOWN STATION

NOTES

1. TYPICAL SHOULDER WIDTH IS 4'. SHOULDER WIDTHS OF LESS THAN 4' ARE USED IN RESTRICTIVE LOCATIONS - SEE PLANS FOR LOCATIONS.
2. HIGH-SIDE OF BANK SHOULDER CROSS SLOPE VARIES (4% MAXIMUM) - 7% MAXIMUM DIFFERENCE BETWEEN TRAVEL LANE AND SHOULDER.
3. LOW-SIDE OF BANK SHOULDER CROSS SLOPE VARIES (4% MINIMUM).
4. WHEN THE SHOULDER WIDTH IS LESS THAN 4', THE SHOULDER CROSS SLOPE SHALL BE THE SAME AS THAT OF THE ADJACENT LANE
5. BUSWAY CROSS SLOPE VARIES. SEE SUPERELEVATION DIAGRAM(MDS-01)

REV.	DATE	REVISION DESCRIPTION	SHEET NO.

Plotted: 7/30/2010

DESIGNER/DRAFTER:
CHECKED BY:
NOT TO SCALE

STATE OF CONNECTICUT
DEPARTMENT OF TRANSPORTATION

Filename: ...\02_HW_MSH_063_H137-3_TYP-001.dgn

SIGNATURE/BLOCK: LOCHNER
H.W. LOCHNER, INC
2110 Silas Deane Highway
Rocky Hill, CT 06067

APPROVED BY:
DATE:

PROJECT TITLE: NEW BRITAIN - HARTFORD BUSWAY HARTFORD NORTH (SECTION A)

TOWN: HARTFORD

DRAWING TITLE: TYPICAL SECTIONS

PROJECT NO. 63-H137
DRAWING NO. TYP-01
SHEET NO. 2

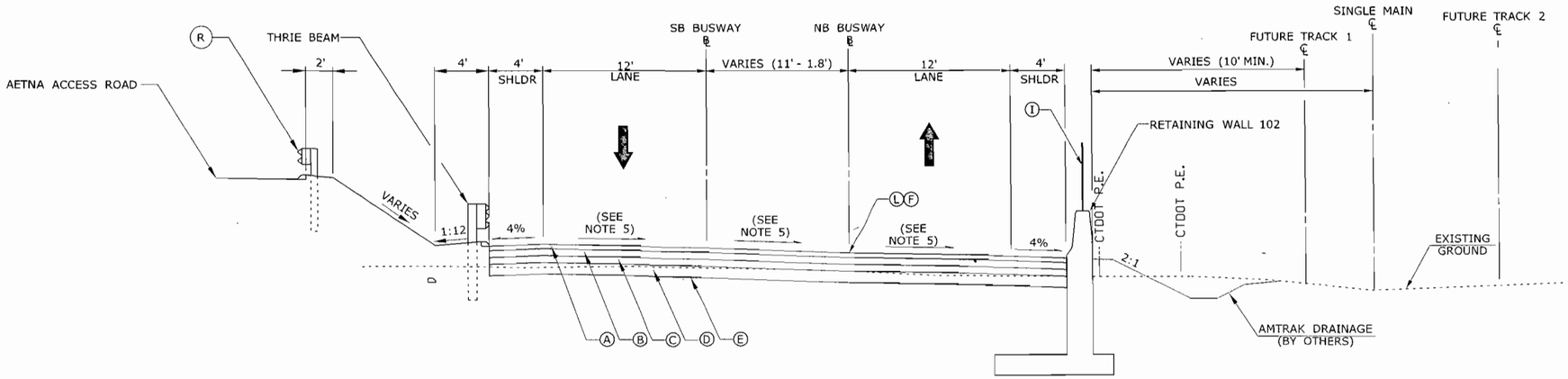

NB BUSWAY

NB BUSWAY STA. 453+11 TO NB BUSWAY STA. 453+81
SB BUSWAY STA. 806+69 TO SB BUSWAY STA. 807+39

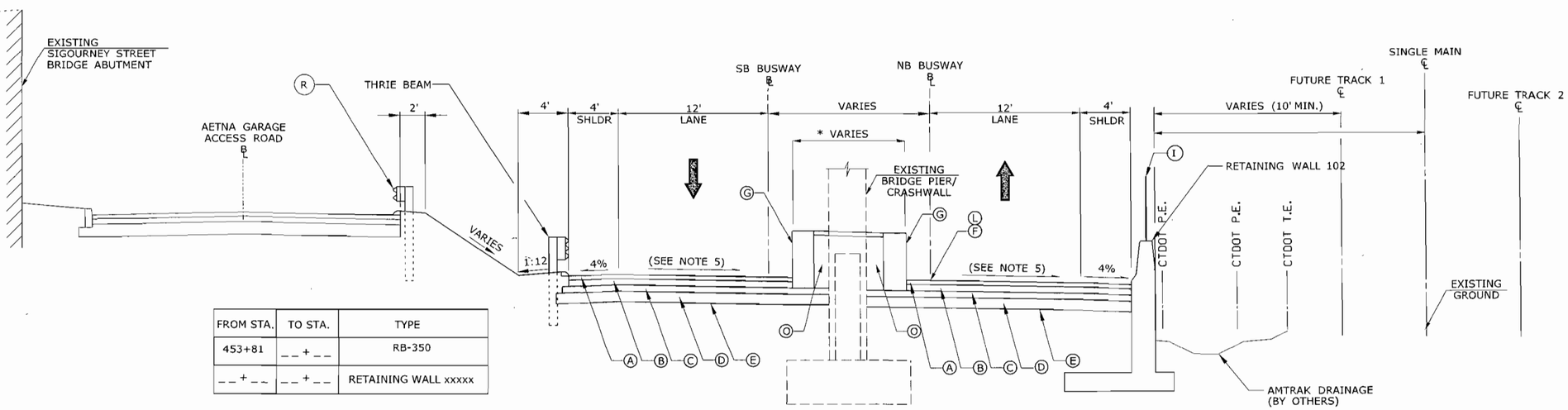

FROM STA.	TO STA.	TYPE
453+81	__ + __	RB-350
__ + __	__ + __	RETAINING WALL xxxxx

NB BUSWAY - UNDER EXISTING SIGOURNEY STREET BRIDGE

NB BUSWAY STA. 453+81 TO NB BUSWAY STA. 456+85
SB BUSWAY STA. 807+39 TO SB BUSWAY STA. 810+43

* VARIES FROM 3.50' AT NB BUSWAY STA. 453+81 TO 2.75' AT NB BUSWAY STA 454+35. CONSTANT 2.75' FROM NB BUSWAY STA. 454+35 TO NB BUSWAY STA 456+24, THEN VARIES FROM 2.75' AT NB BUSWAY STA 456+24 TO 3.50' AT NB BUSWEAY STA 456+84.

LEGEND

- (A) 4.50" HMA S0.5 (PLACED IN 1.50" LIFTS)
- (B) 6" HMA S1
- (C) 6" PROCESSED AGGREGATE BASE
- (D) 10" SUBBASE
- (E) FORMATION OF SUBGRADE
- (F) POINT OF BANK APPLICATION
- (G) PRECAST CONCRETE BARRIER CURB (SEE PLANS FOR TYPE AND LIMITS)
- (H) TURF ESTABLISHMENT
- (I) 6' CHAIN LINK FENCE (BRIDGE)
- (J) 13" CONCRETE FOR PAVEMENT
- (K) 12" SUBBASE
- (L) POINT OF APPLICATION OF GRADE
- (M) CONCRETE STATION PLATFORM (FOR INFORMATION ONLY)
- (O) CONCRETE CAP AND GRANULAR FILL
- (P) CONCRETE SIDEWALK (SEE PLANS FOR LIMITS)
- (Q) 6" CONCRETE CURBING
- (R) METAL BEAM RAIL (SEE WALL/BARRIER TABLE)
- (S) GRANITE CURB (SEE PLANS FOR LIMITS)
- (T) 6" UNDERDRAIN (SEE PLANS FOR LIMITS)
- (U) FURNISH AND PLACE TOPSOIL
- (V) CAST IN PLACE CONCRETE CURB
- (W) REMOVE AND RESET GRANITE CURB
- (X) BITUMINOUS CONCRETE ISLAND (SEE NOTE 6)
- (Z) TACK COAT
- DIRECTION OF TRAVEL UP STATION
- DIRECTION OF TRAVEL DOWN STATION

NOTES

1. TYPICAL SHOULDER WIDTH IS 4'. SHOULDER WIDTHS OF LESS THAN 4' ARE USED IN RESTRICTIVE LOCATIONS - SEE PLANS FOR LOCATIONS.
2. HIGH-SIDE OF BANK SHOULDER CROSS SLOPE VARIES (4% MAXIMUM) - 7% MAXIMUM DIFFERENCE BETWEEN TRAVEL LANE AND SHOULDER.
3. LOW-SIDE OF BANK SHOULDER CROSS SLOPE VARIES (4% MINIMUM).
4. WHEN THE SHOULDER WIDTH IS LESS THAN 4', THE SHOULDER CROSS SLOPE SHALL BE THE SAME AS THAT OF THE ADJACENT LANE.
5. BUSWAY CROSS SLOPE VARIES. SEE SUPER ELEVATION DIAGRAM (MDS-01).

REV.	DATE	REVISION DESCRIPTION	SHEET NO.

Plotted: 7/30/2010

DESIGNER/DRAFTER:
CHECKED BY:
NOT TO SCALE

STATE OF CONNECTICUT
DEPARTMENT OF TRANSPORTATION

Filename: ...\03_HW_MSH_063_H137-3_TYP-002.dgn

SIGNATURE/ BLOCK: LOCHNER
H.W. LOCHNER, INC
2110 Silas Deane Highway
Rocky Hill, CT 06067

APPROVED BY: DATE:

PROJECT TITLE: NEW BRITAIN - HARTFORD BUSWAY HARTFORD NORTH (SECTION A)

TOWN: HARTFORD

DRAWING TITLE: TYPICAL SECTIONS

PROJECT NO. 63-H137
DRAWING NO. TYP-02
SHEET NO. 3

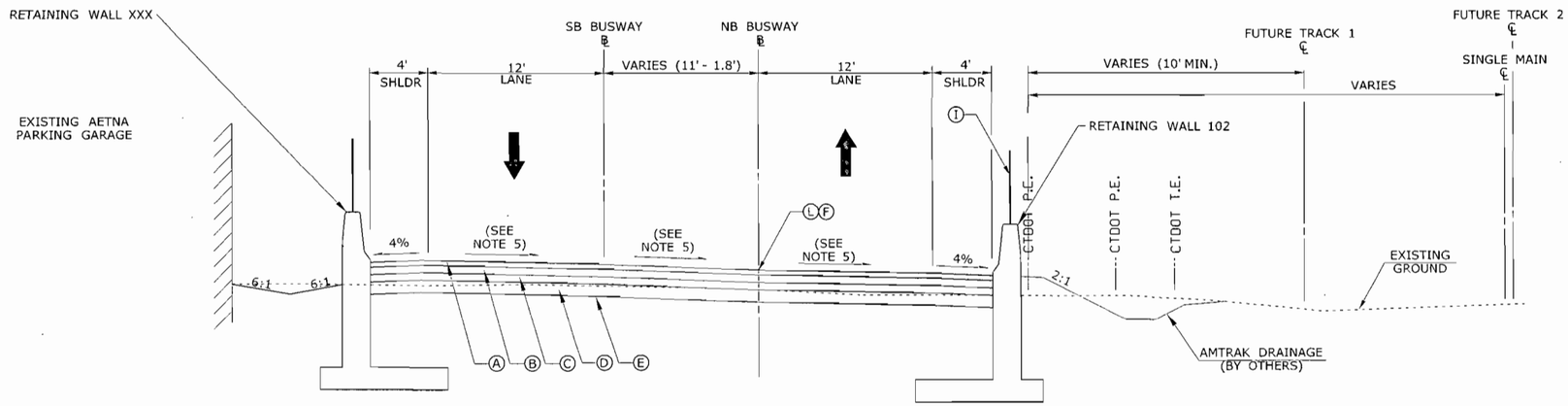

NB BUSWAY

NB BUSWAY STA. 456+85 TO NB BUSWAY STA. 459+00
SB BUSWAY STA. 810+43 TO SB BUSWAY STA. 812+59

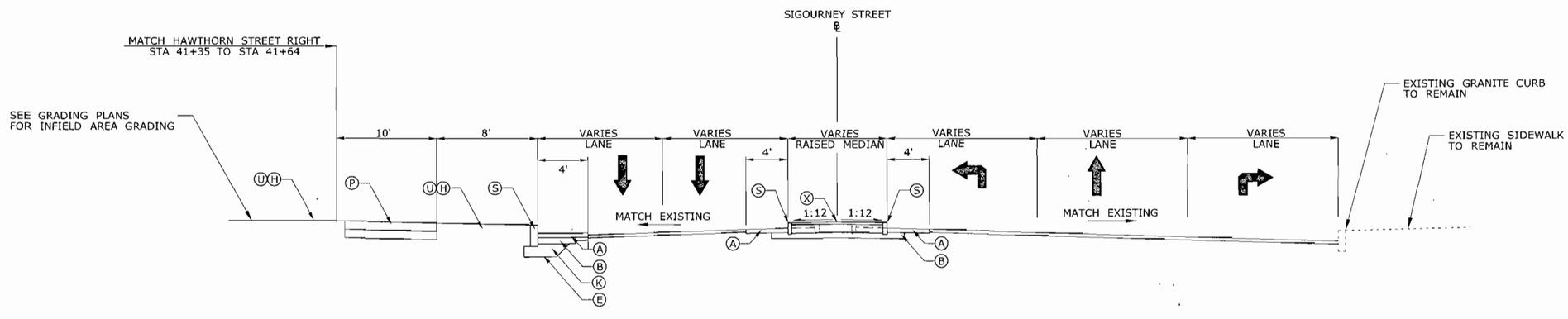

SIGOURNEY STREET

STA. 41+35 TO STA. 42+73

LEGEND

- (A) 4.50" HMA S0.5 (PLACED IN 1.50" LIFTS)
- (B) 6" HMA S1
- (C) 6" PROCESSED AGGREGATE BASE
- (D) 10" SUBBASE
- (E) FORMATION OF SUBGRADE
- (F) POINT OF BANK APPLICATION
- (G) PRECAST CONCRETE BARRIER CURB (SEE PLANS FOR TYPE AND LIMITS)
- (H) TURF ESTABLISHMENT
- (I) 6' CHAIN LINK FENCE (BRIDGE)
- (J) 13" CONCRETE FOR PAVEMENT
- (K) 12" SUBBASE
- (L) POINT OF APPLICATION OF GRADE
- (M) CONCRETE STATION PLATFORM (FOR INFORMATION ONLY)
- (O) CONCRETE CAP AND GRANULAR FILL
- (P) CONCRETE SIDEWALK (SEE PLANS FOR LIMITS)
- (Q) 6" CONCRETE CURBING
- (R) METAL BEAM RAIL (SEE WALL/BARRIER TABLE)
- (S) GRANITE CURB (SEE PLANS FOR LIMITS)
- (T) 6" UNDERDRAIN (SEE PLANS FOR LIMITS)
- (U) FURNISH AND PLACE TOPSOIL
- (V) CAST IN PLACE CONCRETE CURB
- (W) REMOVE AND RESET GRANITE CURB
- (X) BITUMINOUS CONCRETE ISLAND (SEE NOTE 6)
- (Z) TACK COAT
- ⬆ DIRECTION OF TRAVEL UP STATION
- ⬇ DIRECTION OF TRAVEL DOWN STATION

NOTES

1. TYPICAL SHOULDER WIDTH IS 4'. SHOULDER WIDTHS OF LESS THAN 4' ARE USED IN RESTRICTIVE LOCATIONS - SEE PLANS FOR LOCATIONS.
2. HIGH-SIDE OF BANK SHOULDER CROSS SLOPE VARIES (4% MAXIMUM) - 7% MAXIMUM DIFFERENCE BETWEEN TRAVEL LANE AND SHOULDER.
3. LOW-SIDE OF BANK SHOULDER CROSS SLOPE VARIES (4% MINIMUM).
4. WHEN THE SHOULDER WIDTH IS LESS THAN 4', THE SHOULDER CROSS SLOPE SHALL BE THE SAME AS THAT OF THE ADJACENT LANE.
5. BUSWAY CROSS SLOPE VARIES. SEE SUPERELEVATION DIAGRAM (MDS-01)

REV.	DATE	REVISION DESCRIPTION	SHEET NO.

Plotted: 7/30/2010

DESIGNER/DRAFTER:
CHECKED BY:
NOT TO SCALE

STATE OF CONNECTICUT
DEPARTMENT OF TRANSPORTATION

Filename: ...\04_HW_MSH_063_H137-3_TYP-03.dgn

SIGNATURE/BLOCK: LOCHNER
H.W. LOCHNER, INC
2110 Silas Deane Highway
Rocky Hill, CT 06067

APPROVED BY: DATE:

PROJECT TITLE: NEW BRITAIN - HARTFORD BUSWAY HARTFORD NORTH (SECTION B)

TOWN: HARTFORD

DRAWING TITLE: TYPICAL SECTIONS

PROJECT NO. 63-H137
DRAWING NO. TYP-03
SHEET NO. 4

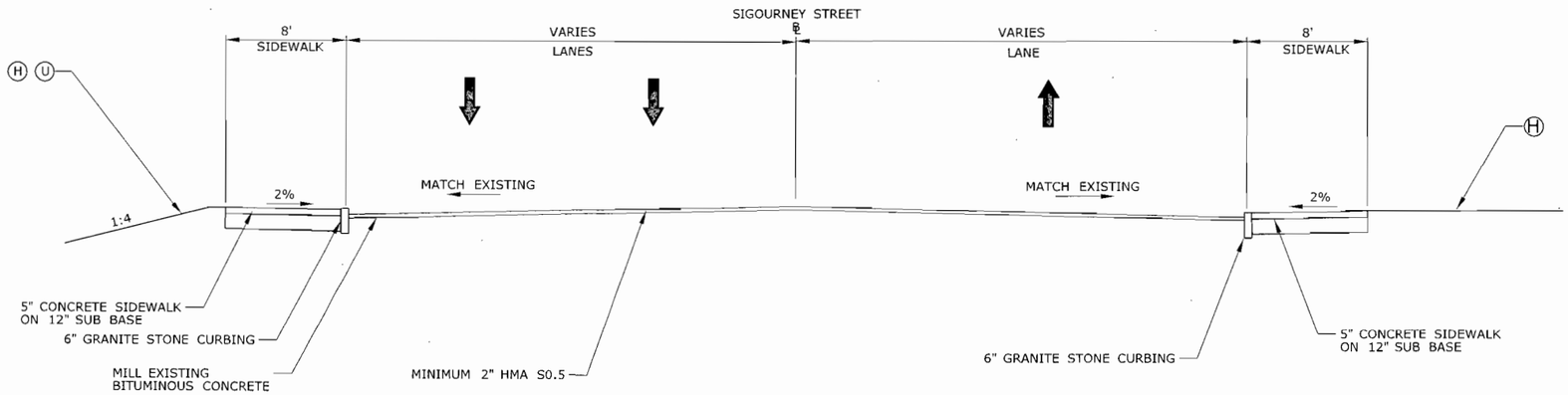

SIGOURNEY STREET

STA. 42+73 TO STA. 44+10

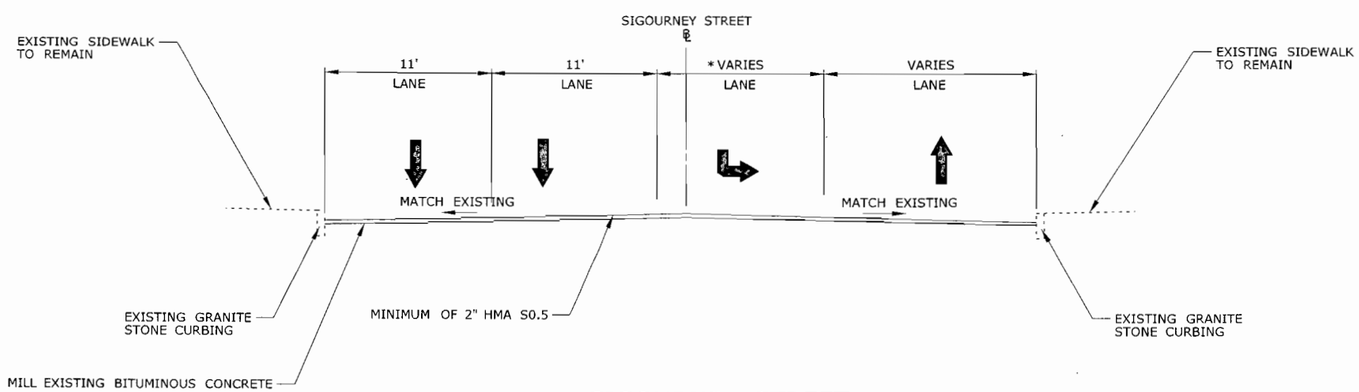

SIGOURNEY STREET

STA. 44+10 TO STA. 45+90

* 12' TO 0' STA 45+00 TO STA 45+90

LEGEND

- (A) 4.50" HMA S0.5 (PLACED IN 1.50" LIFTS)
- (B) 6" HMA S1
- (C) 6" PROCESSED AGGREGATE BASE
- (D) 10" SUBBASE
- (E) FORMATION OF SUBGRADE
- (F) POINT OF BANK APPLICATION
- (G) PRECAST CONCRETE BARRIER CURB (SEE PLANS FOR TYPE AND LIMITS)
- (H) TURF ESTABLISHMENT
- (I) 6' CHAIN LINK FENCE (BRIDGE)
- (J) 13" CONCRETE FOR PAVEMENT
- (K) 12" SUBBASE
- (L) POINT OF APPLICATION OF GRADE
- (M) CONCRETE STATION PLATFORM (FOR INFORMATION ONLY)
- (O) CONCRETE CAP AND GRANULAR FILL
- (P) CONCRETE SIDEWALK (SEE PLANS FOR LIMITS)
- (Q) 6" CONCRETE CURBING
- (R) METAL BEAM RAIL (SEE WALL/BARRIER TABLE)
- (S) GRANITE CURB (SEE PLANS FOR LIMITS)
- (T) 6" UNDERDRAIN (SEE PLANS FOR LIMITS)
- (U) FURNISH AND PLACE TOPSOIL
- (V) CAST IN PLACE CONCRETE CURB
- (W) REMOVE AND RESET GRANITE CURB
- (X) BITUMINOUS CONCRETE ISLAND (SEE NOTE 6)
- (Z) TACK COAT
- ↑ DIRECTION OF TRAVEL UP STATION
- ↓ DIRECTION OF TRAVEL DOWN STATION

NOTES

1. TYPICAL SHOULDER WIDTH IS 4'. SHOULDER WIDTHS OF LESS THAN 4' ARE USED IN RESTRICTIVE LOCATIONS - SEE PLANS FOR LOCATIONS.
2. HIGH-SIDE OF BANK SHOULDER CROSS SLOPE VARIES (4% MAXIMUM) - 7% MAXIMUM DIFFERENCE BETWEEN TRAVEL LANE AND SHOULDER.
3. LOW-SIDE OF BANK SHOULDER CROSS SLOPE VARIES (4% MINIMUM).
4. WHEN THE SHOULDER WIDTH IS LESS THAN 4', THE SHOULDER CROSS SLOPE SHALL BE THE SAME AS THAT OF THE ADJACENT LANE.

REV.	DATE	REVISION DESCRIPTION	SHEET NO.

Plotted: 7/30/2010

DESIGNER/DRAFTER:
CHECKED BY:
NOT TO SCALE

STATE OF CONNECTICUT
DEPARTMENT OF TRANSPORTATION

Filename: ...\05_HW_MSH_063_H137-3_TYP-04.dgn

SIGNATURE/BLOCK: LOCHNER
H.W. LOCHNER, INC
2110 Silas Deane Highway
Rocky Hill, CT 06067

APPROVED BY: DATE:

PROJECT TITLE: NEW BRITAIN - HARTFORD BUSWAY HARTFORD NORTH (SECTION A)

TOWN: HARTFORD

DRAWING TITLE: TYPICAL SECTIONS

PROJECT NO. 63-H137
DRAWING NO. TYP-04
SHEET NO. 5

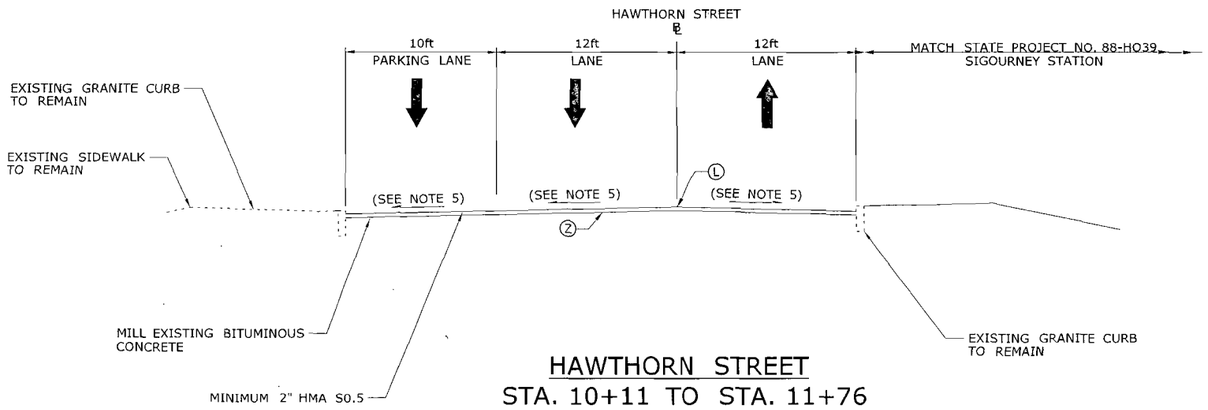

HAWTHORN STREET
STA. 10+11 TO STA. 11+76

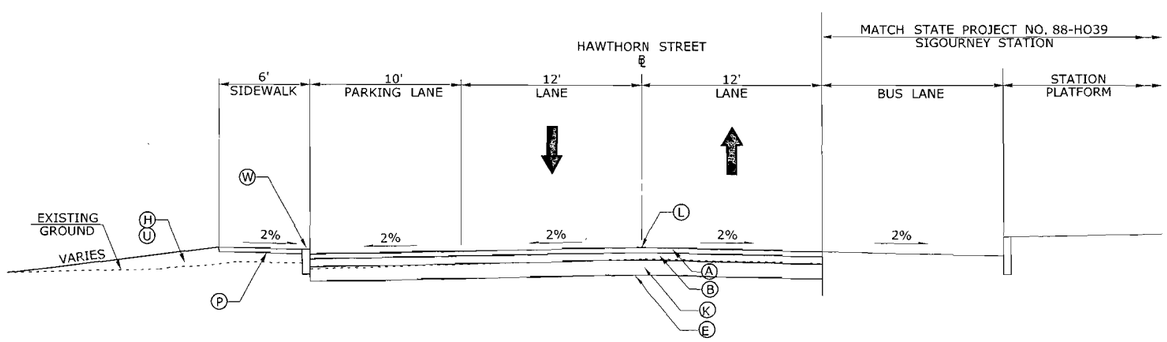

HAWTHORN STREET
STA. 11+76 TO STA. 13+14

LEGEND

- (A) 4.50" HMA S0.5 (PLACED IN 1.50" LIFTS)
- (B) 6" HMA S1
- (C) 6" PROCESSED AGGREGATE BASE
- (D) 10" SUBBASE
- (E) FORMATION OF SUBGRADE
- (F) POINT OF BANK APPLICATION
- (G) PRECAST CONCRETE BARRIER CURB (SEE PLANS FOR TYPE AND LIMITS)
- (H) TURF ESTABLISHMENT
- (I) 6' CHAIN LINK FENCE (BRIDGE)
- (J) 13" CONCRETE FOR PAVEMENT
- (K) 12" SUBBASE
- (L) POINT OF APPLICATION OF GRADE
- (M) CONCRETE STATION PLATFORM (FOR INFORMATION ONLY)
- (O) CONCRETE CAP AND GRANULAR FILL
- (P) CONCRETE SIDEWALK (SEE PLANS FOR LIMITS)
- (Q) 6" CONCRETE CURBING
- (R) METAL BEAM RAIL (SEE WALL/BARRIER TABLE)
- (S) GRANITE CURB (SEE PLANS FOR LIMITS)
- (T) 6" UNDERDRAIN (SEE PLANS FOR LIMITS)
- (U) FURNISH AND PLACE TOPSOIL
- (V) CAST IN PLACE CONCRETE CURB
- (W) REMOVE AND RESET GRANITE CURB
- (X) BITUMINOUS CONCRETE ISLAND (SEE NOTE 6)
- (Z) TACK COAT
- ↑ DIRECTION OF TRAVEL UP STATION
- ↓ DIRECTION OF TRAVEL DOWN STATION

NOTES

1. TYPICAL SHOULDER WIDTH IS 4'. SHOULDER WIDTHS OF LESS THAN 4' ARE USED IN RESTRICTIVE LOCATIONS - SEE PLANS FOR LOCATIONS.
2. HIGH-SIDE OF BANK SHOULDER CROSS SLOPE VARIES (4% MAXIMUM) - 7% MAXIMUM DIFFERENCE BETWEEN TRAVEL LANE AND SHOULDER.
3. LOW-SIDE OF BANK SHOULDER CROSS SLOPE VARIES (4% MINIMUM).
4. WHEN THE SHOULDER WIDTH IS LESS THAN 4', THE SHOULDER CROSS SLOPE SHALL BE THE SAME AS THAT OF THE ADJACENT LANE.

REV.	DATE	REVISION DESCRIPTION	SHEET NO.

Plotted: 7/30/2010

DESIGNER/DRAFTER:
CHECKED BY:
NOT TO SCALE

STATE OF CONNECTICUT
DEPARTMENT OF TRANSPORTATION

Filename: ...\06_HW_MSH_063_H137-3_TYP-05.dgn

SIGNATURE/BLOCK: LOCHNER
H.W. LOCHNER, INC.
2110 Silas Deane Highway
Rocky Hill, CT 06067

APPROVED BY: DATE:

PROJECT TITLE: NEW BRITAIN - HARTFORD BUSWAY HARTFORD NORTH (SECTION A)

TOWN: HARTFORD

DRAWING TITLE: TYPICAL SECTIONS

PROJECT NO. 63-H137
DRAWING NO. TYP-05
SHEET NO. 6

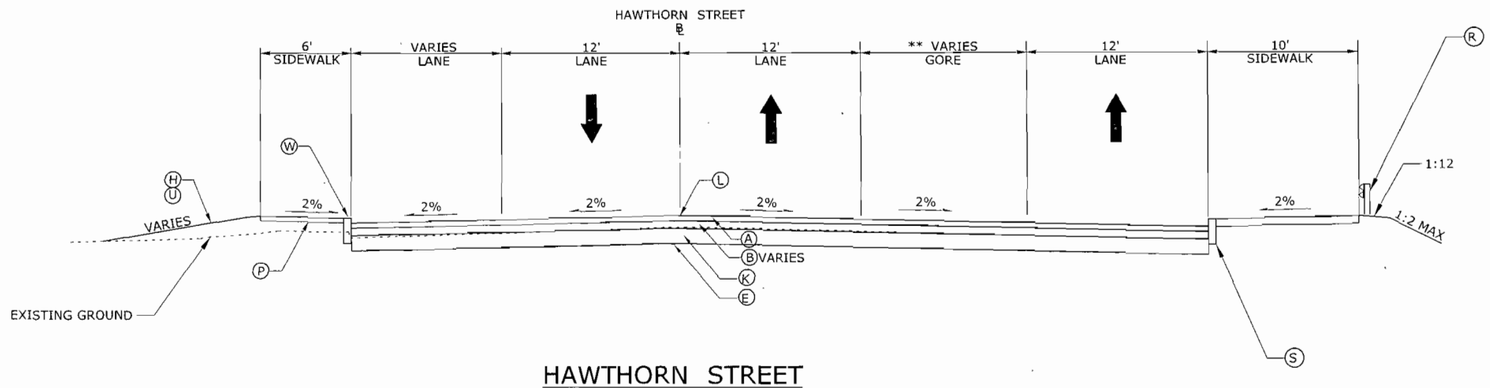

HAWTHORN STREET
STA. 13+14 TO STA. 14+32

* VARIES 10' TO 6.1' STA 13+77 TO STA 14+32

** VARIES 0' TO 11.4' STA 13+77 TO STA 14+32

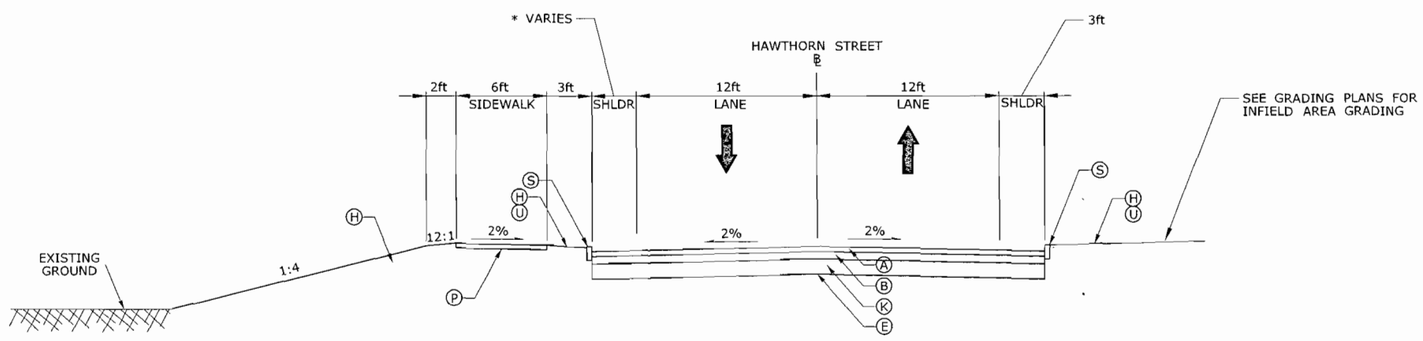

HAWTHORN STREET
STA. 14+32 TO STA. 16+15 (SIGOURNEY STREET)

* VARIES 6.1' TO 3' STA 14+32 TO STA 14+90

LEGEND

- (A) 4.50" HMA S0.5 (PLACED IN 1.50" LIFTS)
- (B) 6" HMA S1
- (C) 6" PROCESSED AGGREGATE BASE
- (D) 10" SUBBASE
- (E) FORMATION OF SUBGRADE
- (F) POINT OF BANK APPLICATION
- (G) PRECAST CONCRETE BARRIER CURB (SEE PLANS FOR TYPE AND LIMITS)
- (H) TURF ESTABLISHMENT
- (I) 6' CHAIN LINK FENCE (BRIDGE)
- (J) 13" CONCRETE FOR PAVEMENT
- (K) 12" SUBBASE
- (L) POINT OF APPLICATION OF GRADE
- (M) CONCRETE STATION PLATFORM (FOR INFORMATION ONLY)
- (O) CONCRETE CAP AND GRANULAR FILL
- (P) CONCRETE SIDEWALK (SEE PLANS FOR LIMITS)
- (Q) 6" CONCRETE CURBING
- (R) METAL BEAM RAIL (SEE WALL/BARRIER TABLE)
- (S) GRANITE CURB (SEE PLANS FOR LIMITS)
- (T) 6" UNDERDRAIN (SEE PLANS FOR LIMITS)
- (U) FURNISH AND PLACE TOPSOIL
- (V) CAST IN PLACE CONCRETE CURB
- (W) REMOVE AND RESET GRANITE CURB
- (X) BITUMINOUS CONCRETE ISLAND (SEE NOTE 6)
- (Z) TACK COAT
- ↑ DIRECTION OF TRAVEL UP STATION
- ↓ DIRECTION OF TRAVEL DOWN STATION

NOTES

1. TYPICAL SHOULDER WIDTH IS 4'. SHOULDER WIDTHS OF LESS THAN 4' ARE USED IN RESTRICTIVE LOCATIONS - SEE PLANS FOR LOCATIONS.
2. HIGH-SIDE OF BANK SHOULDER CROSS SLOPE VARIES (4% MAXIMUM) - 7% MAXIMUM DIFFERENCE BETWEEN TRAVEL LANE AND SHOULDER.
3. LOW-SIDE OF BANK SHOULDER CROSS SLOPE VARIES (4% MINIMUM).
4. WHEN THE SHOULDER WIDTH IS LESS THAN 4', THE SHOULDER CROSS SLOPE SHALL BE THE SAME AS THAT OF THE ADJACENT LANE.

REV.	DATE	REVISION DESCRIPTION	SHEET NO.

Plotted: 7/30/2010

DESIGNER/DRAFTER:
CHECKED BY:
NOT TO SCALE

STATE OF CONNECTICUT
DEPARTMENT OF TRANSPORTATION

Filename: ...\07_HW_MSH_063_H137-3_TYP-06.dgn

SIGNATURE/BLOCK: LOCHNER
H.W. LOCHNER, INC
2110 Silas Deane Highway
Rocky Hill, CT 06067

APPROVED BY: DATE:

PROJECT TITLE: NEW BRITAIN - HARTFORD BUSWAY HARTFORD NORTH (SECTION A)

TOWN: HARTFORD

DRAWING TITLE: TYPICAL SECTIONS

PROJECT NO. 63-H137
DRAWING NO. TYP-06
SHEET NO. 7

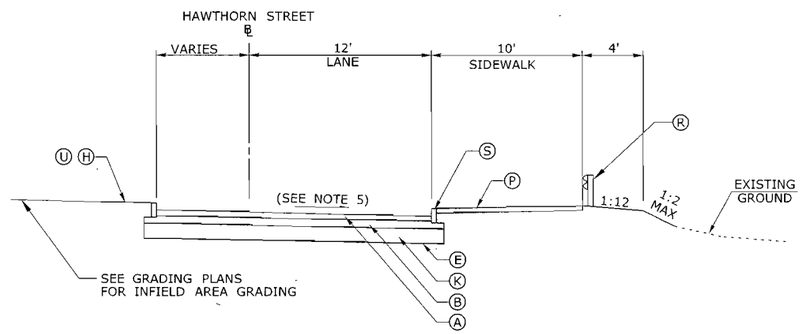

HAWTHORN STREET RIGHT
STA. 80+29 TO STA. 81+34 (SIGOURNEY STREET)

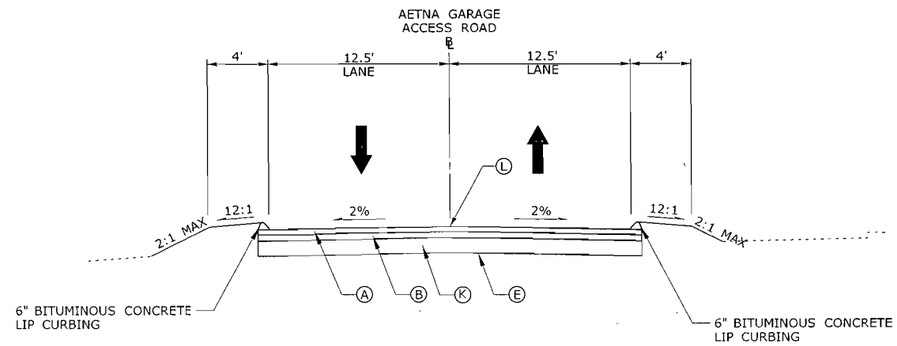

AETNA ACCESS ROAD
STA. 30+26 TO STA. 31+75

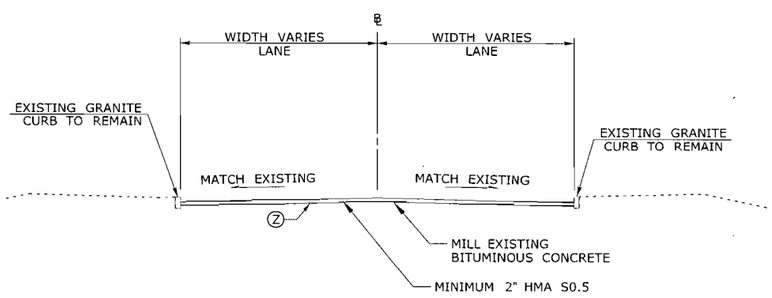

IMLAY STREET
STA. 70+21 (HAWTHORN STREET) TO STA. 70+81

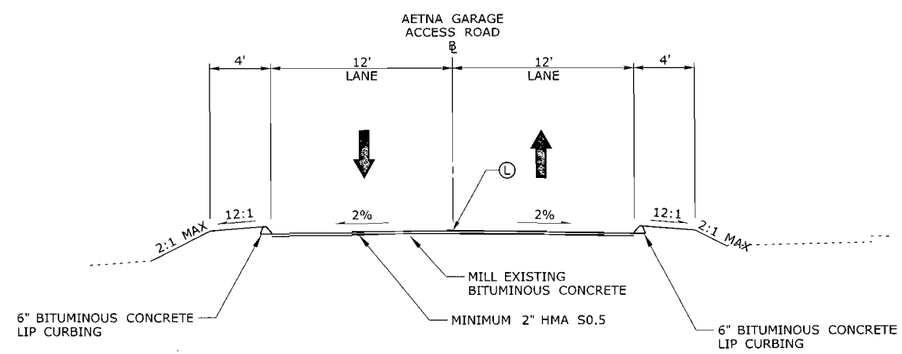

AETNA ACCESS ROAD
STA. 31+75 TO STA. 31+95

LEGEND

- (A) 4.50" HMA S0.5 (PLACED IN 1.50" LIFTS)
- (B) 6" HMA S1
- (C) 6" PROCESSED AGGREGATE BASE
- (D) 10" SUBBASE
- (E) FORMATION OF SUBGRADE
- (F) POINT OF BANK APPLICATION
- (G) PRECAST CONCRETE BARRIER CURB (SEE PLANS FOR TYPE AND LIMITS)
- (H) TURF ESTABLISHMENT
- (I) 6' CHAIN LINK FENCE (BRIDGE)
- (J) 13" CONCRETE FOR PAVEMENT
- (K) 12" SUBBASE
- (L) POINT OF APPLICATION OF GRADE
- (M) CONCRETE STATION PLATFORM (FOR INFORMATION ONLY)
- (O) CONCRETE CAP AND GRANULAR FILL
- (P) CONCRETE SIDEWALK (SEE PLANS FOR LIMITS)
- (Q) 6" CONCRETE CURBING
- (R) METAL BEAM RAIL (SEE WALL/BARRIER TABLE)
- (S) GRANITE CURB (SEE PLANS FOR LIMITS)
- (T) 6" UNDERDRAIN (SEE PLANS FOR LIMITS)
- (U) FURNISH AND PLACE TOPSOIL
- (V) CAST IN PLACE CONCRETE CURB
- (W) REMOVE AND RESET GRANITE CURB
- (X) BITUMINOUS CONCRETE ISLAND (SEE NOTE 6)
- (Z) TACK COAT
- ↑ DIRECTION OF TRAVEL UP STATION
- ↓ DIRECTION OF TRAVEL DOWN STATION

NOTES

1. TYPICAL SHOULDER WIDTH IS 4'. SHOULDER WIDTHS OF LESS THAN 4' ARE USED IN RESTRICTIVE LOCATIONS - SEE PLANS FOR LOCATIONS.
2. HIGH-SIDE OF BANK SHOULDER CROSS SLOPE VARIES (4% MAXIMUM) - 7% MAXIMUM DIFFERENCE BETWEEN TRAVEL LANE AND SHOULDER.
3. LOW-SIDE OF BANK SHOULDER CROSS SLOPE VARIES (4% MINIMUM).
4. WHEN THE SHOULDER WIDTH IS LESS THAN 4', THE SHOULDER CROSS SLOPE SHALL BE THE SAME AS THAT OF THE ADJACENT LANE.

REV.	DATE	REVISION DESCRIPTION	SHEET NO.

Plotted: 7/30/2010

DESIGNER/DRAFTER:
CHECKED BY:
NOT TO SCALE

STATE OF CONNECTICUT
DEPARTMENT OF TRANSPORTATION

Filename: ...\08_HW_MSH_063_H137-3_TYP-07.dgn

SIGNATURE/BLOCK: LOCHNER
H.W. LOCHNER, INC
2110 Silas Deane Highway
Rocky Hill, CT 06067

APPROVED BY: DATE:

PROJECT TITLE: NEW BRITAIN - HARTFORD BUSWAY HARTFORD NORTH (SECTION A)

TOWN: HARTFORD

DRAWING TITLE: TYPICAL SECTIONS

PROJECT NO. 63-H137
DRAWING NO. TYP-07
SHEET NO. 8

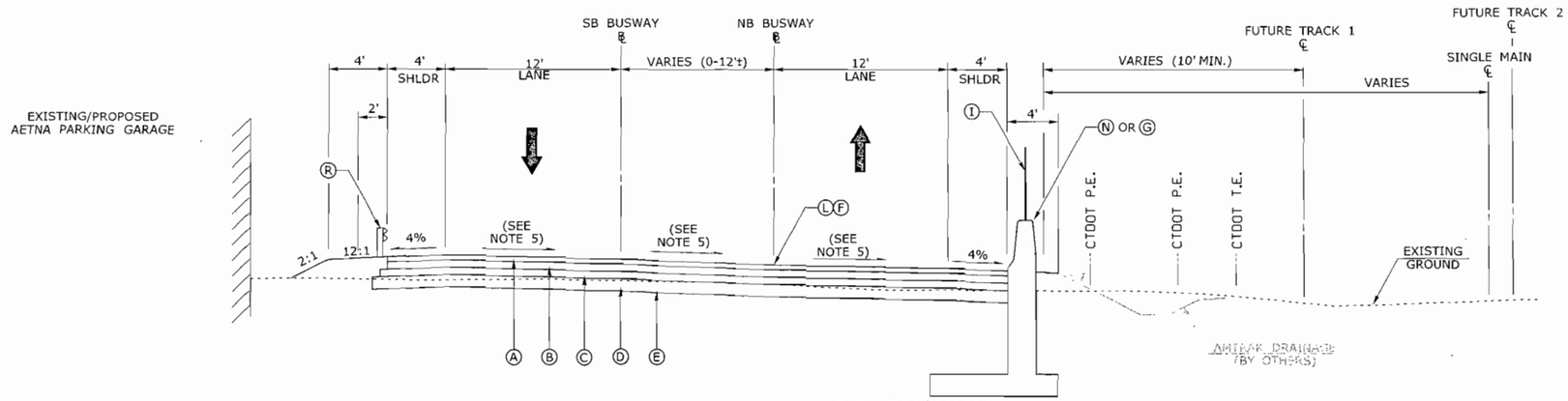

NB BUSWAY

NB BUSWAY STA. 459+00 TO NB BUSWAY STA. 460+33
SB BUSWAY STA. 812+59 TO SB BUSWAY STA. 813+92

FROM STA.	TO STA.	TYPE
456+35	460+13	RB-350
460+13	462+30	VERTICAL FACE PCBC

FROM STA.	TO STA.	TYPE
452+64	459+00	RETAINING WALL 102
459+00	462+00	F-SHAPED PCBC

LEGEND

- (A) 4.50" HMA S0.5 (PLACED IN 1.50" LIFTS)
- (B) 6" HMA S1
- (C) 6" PROCESSED AGGREGATE BASE
- (D) 10" SUBBASE
- (E) FORMATION OF SUBGRADE
- (F) POINT OF BANK APPLICATION
- (G) PRECAST CONCRETE BARRIER CURB (SEE PLANS FOR TYPE AND LIMITS)
- (H) TURF ESTABLISHMENT
- (I) 6' CHAIN LINK FENCE (BRIDGE)
- (J) 13" CONCRETE FOR PAVEMENT
- (K) 12" SUBBASE
- (L) POINT OF APPLICATION OF GRADE
- (M) CONCRETE STATION PLATFORM (FOR INFORMATION ONLY)
- (N) RETAINING WALL (SEE WALL/BARRIER TABLE)
- (O) CONCRETE CAP AND GRANULAR FILL
- (P) CONCRETE SIDEWALK (SEE PLANS FOR LIMITS)
- (Q) 6" CONCRETE CURBING
- (R) METAL BEAM RAIL (SEE WALL/BARRIER TABLE)
- (S) GRANITE CURB (SEE PLANS FOR LIMITS)
- (T) 6" UNDERDRAIN (SEE PLANS FOR LIMITS)
- (U) FURNISH AND PLACE TOPSOIL
- (V) CAST IN PLACE CONCRETE CURB
- (W) REMOVE AND RESET GRANITE CURB
- (X) BITUMINOUS CONCRETE ISLAND (SEE NOTE 6)
- (Z) TACK COAT
- DIRECTION OF TRAVEL UP STATION
- DIRECTION OF TRAVEL DOWN STATION

NOTES

1. TYPICAL SHOULDER WIDTH IS 4'. SHOULDER WIDTHS OF LESS THAN 4' ARE USED IN RESTRICTIVE LOCATIONS - SEE PLANS FOR LOCATIONS.
2. HIGH-SIDE OF BANK SHOULDER CROSS SLOPE VARIES (4% MAXIMUM) - 7% MAXIMUM DIFFERENCE BETWEEN TRAVEL LANE AND SHOULDER.
3. LOW-SIDE OF BANK SHOULDER CROSS SLOPE VARIES (4% MINIMUM).
4. WHEN THE SHOULDER WIDTH IS LESS THAN 4', THE SHOULDER CROSS SLOPE SHALL BE THE SAME AS THAT OF THE ADJACENT LANE.
5. CROSS SLOPES VARY - SEE CROSS SECTIONS.
6. BITUMINOUS CONCRETE ISLAND (PAID AS BITUMINOUS CONCRETE DRIVEWAY) SEE STD SHEET HW-921-01 FOR DETAIL.

REV.	DATE	REVISION DESCRIPTION	SHEET NO.

Plotted: 7/30/2010

DESIGNER/DRAFTER:
CHECKED BY:
NOT TO SCALE

STATE OF CONNECTICUT
DEPARTMENT OF TRANSPORTATION

Filename: ...\09_HW_MSH_063_H137-4_TYP-008.dgn

SIGNATURE/BLOCK: LOCHNER
H.W. LOCHNER, INC
2110 Silas Deane Highway
Rocky Hill, CT 06067

APPROVED BY: DATE:

PROJECT TITLE: NEW BRITAIN - HARTFORD BUSWAY HARTFORD NORTH (SECTION B)

TOWN: HARTFORD

DRAWING TITLE: TYPICAL SECTIONS

PROJECT NO. 63-H137
DRAWING NO. TYP-08
SHEET NO.

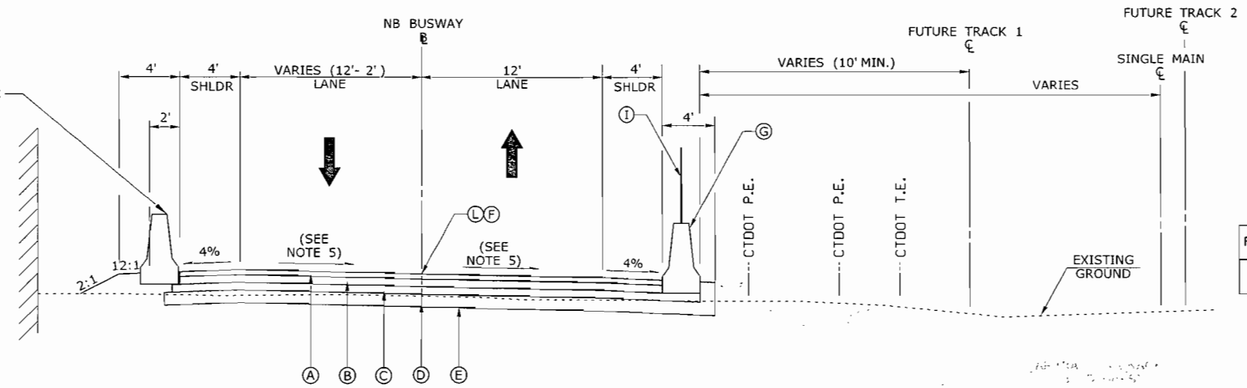

FROM STA.	TO STA.	TYPE
460+13	462+30	VERTICAL FACE PCBC

FROM STA.	TO STA.	TYPE
459+00	462+00	F-SHAPED PCBC

NB BUSWAY

NB BUSWAY STA. 460+33 TO NB BUSWAY STA. 461+93

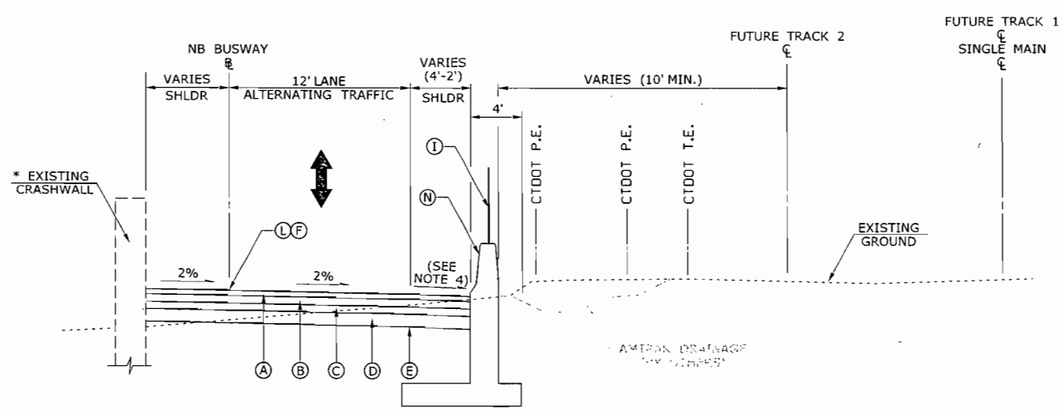

FROM STA.	TO STA.	TYPE
460+13	462+30	VERTICAL FACE PCBC
462+30	471+00	EXISTING CRASH WALL

FROM STA.	TO STA.	TYPE
462+00	475+31	RETAINING WALL 103

NB BUSWAY

NB BUSWAY STA. 461+93 TO NB BUSWAY STA. 471+00 (FLOWER STREET INTERSECTION)

* PCBC FROM NB BUSWAY STA 460+12 TO 462+30. EXISTING CRASHWALL EXTENDS FROM NB BUSWAY STA 462+30 TO NB BUSWAY STA 471+00

LEGEND

- (A) 4.50" HMA S0.5 (PLACED IN 1.50" LIFTS)
- (B) 6" HMA S1
- (C) 6" PROCESSED AGGREGATE BASE
- (D) 10" SUBBASE
- (E) FORMATION OF SUBGRADE
- (F) POINT OF BANK APPLICATION
- (G) PRECAST CONCRETE BARRIER CURB (SEE PLANS FOR TYPE AND LIMITS)
- (H) TURF ESTABLISHMENT
- (I) 6' CHAIN LINK FENCE (BRIDGE)
- (J) 13" CONCRETE FOR PAVEMENT
- (K) 12" SUBBASE
- (L) POINT OF APPLICATION OF GRADE
- (M) CONCRETE STATION PLATFORM (FOR INFORMATION ONLY)
- (N) RETAINING WALL (SEE WALL/BARRIER TABLE)
- (O) CONCRETE CAP AND GRANULAR FILL
- (P) CONCRETE SIDEWALK (SEE PLANS FOR LIMITS)
- (Q) 6" CONCRETE CURBING
- (R) METAL BEAM RAIL (SEE WALL/BARRIER TABLE)
- (S) GRANITE CURB (SEE PLANS FOR LIMITS)
- (T) 6" UNDERDRAIN (SEE PLANS FOR LIMITS)
- (U) FURNISH AND PLACE TOPSOIL
- (V) CAST IN PLACE CONCRETE CURB
- (W) REMOVE AND RESET GRANITE CURB
- (X) BITUMINOUS CONCRETE ISLAND (SEE NOTE 6)
- (Z) TACK COAT
- DIRECTION OF TRAVEL UP STATION
- DIRECTION OF TRAVEL DOWN STATION

NOTES

1. TYPICAL SHOULDER WIDTH IS 4'. SHOULDER WIDTHS OF LESS THAN 4' ARE USED IN RESTRICTIVE LOCATIONS - SEE PLANS FOR LOCATIONS.
2. HIGH-SIDE OF BANK SHOULDER CROSS SLOPE VARIES (4% MAXIMUM) - 7% MAXIMUM DIFFERENCE BETWEEN TRAVEL LANE AND SHOULDER.
3. LOW-SIDE OF BANK SHOULDER CROSS SLOPE VARIES (4% MINIMUM).
4. WHEN THE SHOULDER WIDTH IS LESS THAN 4', THE SHOULDER CROSS SLOPE SHALL BE THE SAME AS THAT OF THE ADJACENT LANE.
5. CROSS SLOPES VARY - SEE CROSS SECTIONS.
6. BITUMINOUS CONCRETE ISLAND (PAID AS BITUMINOUS CONCRETE DRIVEWAY) SEE STD SHEET HW-921-01 FOR DETAIL.

REV.	DATE	REVISION DESCRIPTION	SHEET NO.

Plotted: 7/30/2010

DESIGNER/DRAFTER:
CHECKED BY:
NOT TO SCALE

STATE OF CONNECTICUT
DEPARTMENT OF TRANSPORTATION

Filename: ...\10_HW_MSH_063_H137-4_TYP-009.dgn

SIGNATURE/BLOCK: LOCHNER
H.W. LOCHNER, INC
2110 Silas Deane Highway
Rocky Hill, CT 06067

APPROVED BY: DATE:

PROJECT TITLE: NEW BRITAIN - HARTFORD BUSWAY HARTFORD NORTH (SECTION B)

TOWN: HARTFORD

DRAWING TITLE: TYPICAL SECTIONS

PROJECT NO. 63-H137
DRAWING NO. TYP-09
SHEET NO. 10

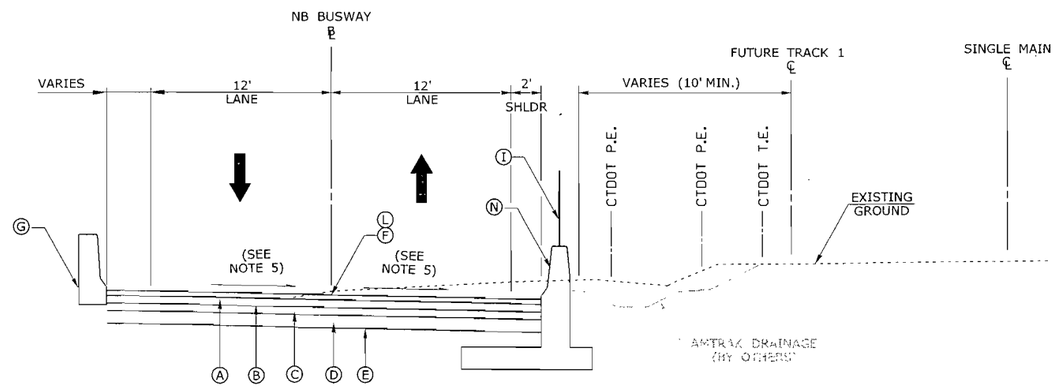

NB BUSWAY

NB BUSWAY STA. 471+00 TO NB BUSWAY STA. 472+46
(BUSWAY-FLOWER STREET INTERSECTION)

FROM STA.	TO STA.	TYPE
NB BUSWAY STA 471+00	FLOWER STREET STA 10+59.50	VERTICAL FACE PCBC
FLOWER STREET STA 10+88	NB BUSWAY STA 482+91	VERTICAL FACE PCBC

FROM STA.	TO STA.	TYPE
462+00	475+31	RETAINING WALL 103

LEGEND

- (A) 4.50" HMA S0.5 (PLACED IN 1.50" LIFTS)
- (B) 6" HMA S1
- (C) 6" PROCESSED AGGREGATE BASE
- (D) 10" SUBBASE
- (E) FORMATION OF SUBGRADE
- (F) POINT OF BANK APPLICATION
- (G) PRECAST CONCRETE BARRIER CURB (SEE PLANS FOR TYPE AND LIMITS)
- (H) TURF ESTABLISHMENT
- (I) 6' CHAIN LINK FENCE (BRIDGE)
- (J) 13" CONCRETE FOR PAVEMENT
- (K) 12" SUBBASE
- (L) POINT OF APPLICATION OF GRADE
- (M) CONCRETE STATION PLATFORM (FOR INFORMATION ONLY)
- (N) RETAINING WALL (SEE WALL/BARRIER TABLE)
- (O) CONCRETE CAP AND GRANULAR FILL
- (P) CONCRETE SIDEWALK (SEE PLANS FOR LIMITS)
- (Q) 6" CONCRETE CURBING
- (R) METAL BEAM RAIL (SEE WALL/BARRIER TABLE)
- (S) GRANITE CURB (SEE PLANS FOR LIMITS)
- (T) 6" UNDERDRAIN (SEE PLANS FOR LIMITS)
- (U) FURNISH AND PLACE TOPSOIL
- (V) CAST IN PLACE CONCRETE CURB
- (W) REMOVE AND RESET GRANITE CURB
- (X) BITUMINOUS CONCRETE ISLAND (SEE NOTE 6)
- (Z) TACK COAT
- ↑ DIRECTION OF TRAVEL UP STATION
- ↓ DIRECTION OF TRAVEL DOWN STATION

NOTES

1. TYPICAL SHOULDER WIDTH IS 4'. SHOULDER WIDTHS OF LESS THAN 4' ARE USED IN RESTRICTIVE LOCATIONS - SEE PLANS FOR LOCATIONS.
2. HIGH-SIDE OF BANK SHOULDER CROSS SLOPE VARIES (4% MAXIMUM) - 7% MAXIMUM DIFFERENCE BETWEEN TRAVEL LANE AND SHOULDER.
3. LOW-SIDE OF BANK SHOULDER CROSS SLOPE VARIES (4% MINIMUM).
4. WHEN THE SHOULDER WIDTH IS LESS THAN 4', THE SHOULDER CROSS SLOPE SHALL BE THE SAME AS THAT OF THE ADJACENT LANE.
5. CROSS SLOPES VARY - SEE CROSS SECTIONS.
6. BITUMINOUS CONCRETE ISLAND (PAID AS BITUMINOUS CONCRETE DRIVEWAY) SEE STD SHEET HW-921-01 FOR DETAIL.

REV.	DATE	REVISION DESCRIPTION	SHEET NO.

Plotted: 7/30/2010

DESIGNER/DRAFTER:
CHECKED BY:
NOT TO SCALE

STATE OF CONNECTICUT
DEPARTMENT OF TRANSPORTATION

Filename: ..\11_HW_MSH_063_H137-4_TYP-010.dgn

SIGNATURE/ BLOCK:
LOCHNER
H.W. LOCHNER, INC
2110 Silas Deane Highway
Rocky Hill, CT 06067
APPROVED BY:
DATE:

PROJECT TITLE:
NEW BRITAIN - HARTFORD BUSWAY HARTFORD NORTH (SECTION B)

TOWN:
HARTFORD

DRAWING TITLE:
TYPICAL SECTIONS

PROJECT NO.
63-H137
DRAWING NO.
TYP-10
SHEET NO.
11

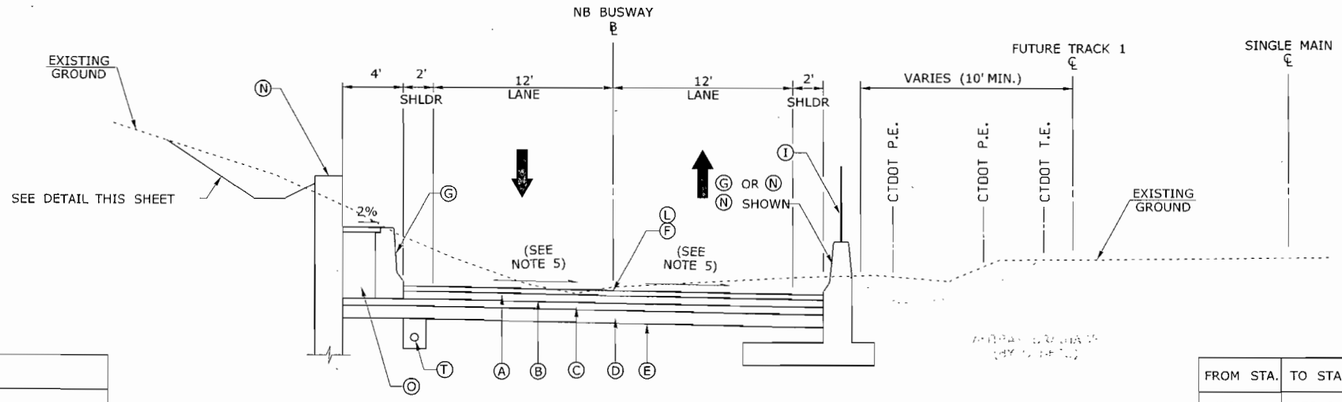

FROM STA.	TO STA.	TYPE
471+00	472+66	VERTICAL FACE PCBC
472+66	482+91	F-SHAPED PCBC (W/ CONCRETE CAP)
472+66	475+35	RETAINING WALL 104
475+35	476+17	BROAD STREET BRIDGE ABUTMENT
476+17	479+30	RETAINING WALL 105
479+30	480+00	EXISTING CRASH WALL
480+00	482+56	RETAINING WALL 109

FROM STA.	TO STA.	TYPE
462+00	475+31	RETAINING WALL 103
475+31	476+13	BROAD STEET BRIDGE ABUTMENT
476+13	483+08	RETAINING WALL 106

NB BUSWAY

NB BUSWAY STA. 472+46 TO NB BUSWAY STA. 481+31

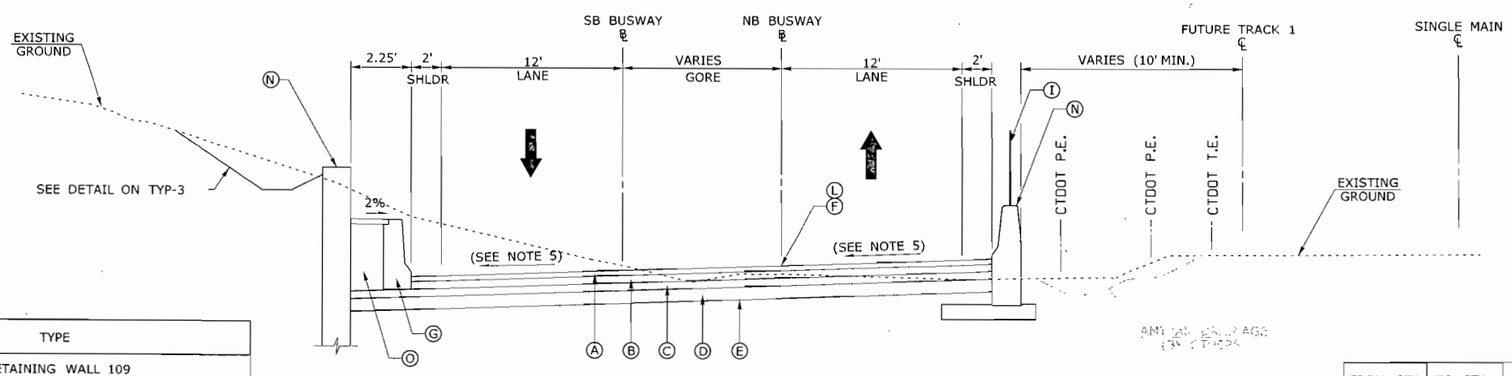

FROM STA.	TO STA.	TYPE
480+00	482+56	RETAINING WALL 109
472+66	482+91	F-SHAPED PCBC W/CONCRETE CAP

FROM STA.	TO STA.	TYPE
476+13	483+08	RETAINING WALL 106

NB BUSWAY

NB BUSWAY STA. 481+31 TO NB BUSWAY STA. 482+89
SB BUSWAY STA. 900+00 TO SB BUSWAY STA. 901+57

LEGEND

- (A) 4.50" HMA S0.5 (PLACED IN 1.50" LIFTS)
- (B) 6" HMA S1
- (C) 6" PROCESSED AGGREGATE BASE
- (D) 10" SUBBASE
- (E) FORMATION OF SUBGRADE
- (F) POINT OF BANK APPLICATION
- (G) PRECAST CONCRETE BARRIER CURB (SEE PLANS FOR TYPE AND LIMITS)
- (H) TURF ESTABLISHMENT
- (I) 6' CHAIN LINK FENCE (BRIDGE)
- (J) 13" CONCRETE FOR PAVEMENT
- (K) 12" SUBBASE
- (L) POINT OF APPLICATION OF GRADE
- (M) CONCRETE STATION PLATFORM (FOR INFORMATION ONLY)
- (N) RETAINING WALL (SEE WALL/BARRIER TABLE)
- (O) CONCRETE CAP AND GRANULAR FILL
- (P) CONCRETE SIDEWALK (SEE PLANS FOR LIMITS)
- (Q) 6" CONCRETE CURBING
- (R) METAL BEAM RAIL (SEE WALL/BARRIER TABLE)
- (S) GRANITE CURB (SEE PLANS FOR LIMITS)
- (T) 6" UNDERDRAIN (SEE PLANS FOR LIMITS)
- (U) FURNISH AND PLACE TOPSOIL
- (V) CAST IN PLACE CONCRETE CURB
- (W) REMOVE AND RESET GRANITE CURB
- (X) BITUMINOUS CONCRETE ISLAND (SEE NOTE 6)
- (Z) TACK COAT
- ↑ DIRECTION OF TRAVEL UP STATION
- ↓ DIRECTION OF TRAVEL DOWN STATION

NOTES

1. TYPICAL SHOULDER WIDTH IS 4'. SHOULDER WIDTHS OF LESS THAN 4' ARE USED IN RESTRICTIVE LOCATIONS - SEE PLANS FOR LOCATIONS.
2. HIGH-SIDE OF BANK SHOULDER CROSS SLOPE VARIES (4% MAXIMUM) - 7% MAXIMUM DIFFERENCE BETWEEN TRAVEL LANE AND SHOULDER.
3. LOW-SIDE OF BANK SHOULDER CROSS SLOPE VARIES (4% MINIMUM).
4. WHEN THE SHOULDER WIDTH IS LESS THAN 4', THE SHOULDER CROSS SLOPE SHALL BE THE SAME AS THAT OF THE ADJACENT LANE.
5. CROSS SLOPES VARY - SEE CROSS SECTIONS.
6. BITUMINOUS CONCRETE ISLAND (PAID AS BITUMINOUS CONCRETE DRIVEWAY) SEE STD SHEET HW-921-01 FOR DETAIL.

REV.	DATE	REVISION DESCRIPTION	SHEET NO.

Plotted: 7/30/2010

DESIGNER/DRAFTER:
CHECKED BY:
NOT TO SCALE

STATE OF CONNECTICUT
DEPARTMENT OF TRANSPORTATION

Filename: ...\12_HW_MSH_063_H137-4_TYP-011.dgn

SIGNATURE/ BLOCK: LOCHNER
H.W. LOCHNER, INC
2110 Silas Deane Highway
Rocky Hill, CT 06067
APPROVED BY: DATE:

PROJECT TITLE: NEW BRITAIN - HARTFORD BUSWAY HARTFORD NORTH (SECTION B)

TOWN: HARTFORD

DRAWING TITLE: TYPICAL SECTIONS

PROJECT NO. 63-H137
DRAWING NO. TYP-11
SHEET NO. 12

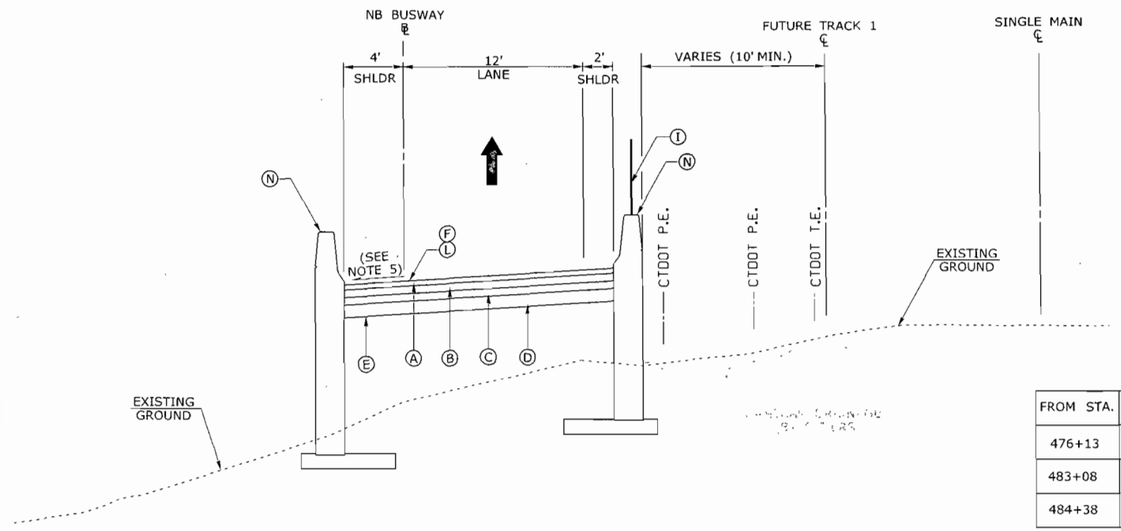

FROM STA.	TO STA.	TYPE
482+96	484+34	NB BUSWAY BRIDGE PARAPET
484+34	486+23	RETAINING WALL 107

FROM STA.	TO STA.	TYPE
476+13	483+08	RETAINING WALL 106
483+08	484+38	NB BUSWAY BRIDGE PARAPET
484+38	487+42	RETAINING WALL 108

BUSWAY

NB BUSWAY STA. 482+89 TO NB BUSWAY STA. 483+13 (BEGIN BRIDGE)±
AND
NB BUSWAY STA. 484+24± (END BRIDGE) TO NB BUSWAY STA. 485+40

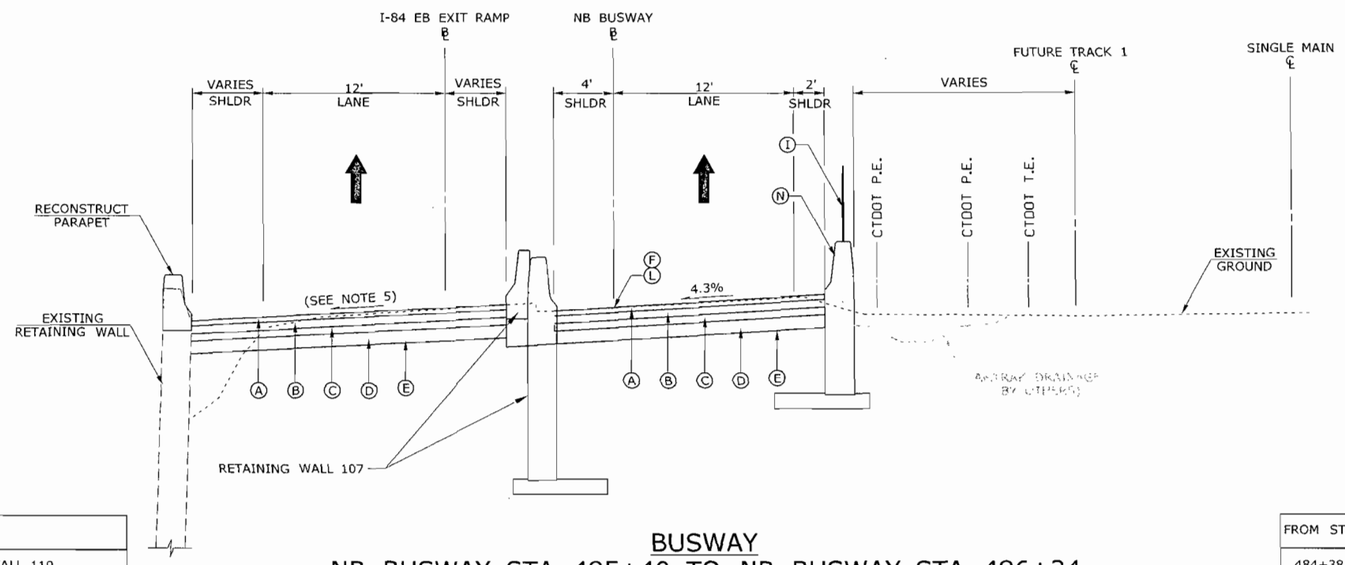

FROM STA.	TO STA.	TYPE
485+51	489+59	RETAINING WALL 110
484+34	486+23	RETAINING WALL 107

FROM STA.	TO STA.	TYPE
484+38	487+42	RETAINING WALL 108
484+34	486+23	RETAINING WALL 107

BUSWAY

NB BUSWAY STA. 485+40 TO NB BUSWAY STA. 486+24
I-84 E.B. EXIT RAMP STA. 385+45 TO I-84 E.B. EXIT RAMP STA. 386+28

LEGEND

- (A) 4.50" HMA S0.5 (PLACED IN 1.50" LIFTS)
- (B) 6" HMA S1
- (C) 6" PROCESSED AGGREGATE BASE
- (D) 10" SUBBASE
- (E) FORMATION OF SUBGRADE
- (F) POINT OF BANK APPLICATION
- (G) PRECAST CONCRETE BARRIER CURB (SEE PLANS FOR TYPE AND LIMITS)
- (H) TURF ESTABLISHMENT
- (I) 6' CHAIN LINK FENCE (BRIDGE)
- (J) 13" CONCRETE FOR PAVEMENT
- (K) 12" SUBBASE
- (L) POINT OF APPLICATION OF GRADE
- (M) CONCRETE STATION PLATFORM (FOR INFORMATION ONLY)
- (N) RETAINING WALL (SEE WALL/BARRIER TABLE)
- (O) CONCRETE CAP AND GRANULAR FILL
- (P) CONCRETE SIDEWALK (SEE PLANS FOR LIMITS)
- (Q) 6" CONCRETE CURBING
- (R) METAL BEAM RAIL (SEE WALL/BARRIER TABLE)
- (S) GRANITE CURB (SEE PLANS FOR LIMITS)
- (T) 6" UNDERDRAIN (SEE PLANS FOR LIMITS)
- (U) FURNISH AND PLACE TOPSOIL
- (V) CAST IN PLACE CONCRETE CURB
- (W) REMOVE AND RESET GRANITE CURB
- (X) BITUMINOUS CONCRETE ISLAND (SEE NOTE 6)
- (Z) TACK COAT
- ↑ DIRECTION OF TRAVEL UP STATION
- ↓ DIRECTION OF TRAVEL DOWN STATION

NOTES

1. TYPICAL SHOULDER WIDTH IS 4'. SHOULDER WIDTHS OF LESS THAN 4' ARE USED IN RESTRICTIVE LOCATIONS - SEE PLANS FOR LOCATIONS.
2. HIGH-SIDE OF BANK SHOULDER CROSS SLOPE VARIES (4% MAXIMUM) - 7% MAXIMUM DIFFERENCE BETWEEN TRAVEL LANE AND SHOULDER.
3. LOW-SIDE OF BANK SHOULDER CROSS SLOPE VARIES (4% MINIMUM).
4. WHEN THE SHOULDER WIDTH IS LESS THAN 4', THE SHOULDER CROSS SLOPE SHALL BE THE SAME AS THAT OF THE ADJACENT LANE.
5. CROSS SLOPES VARY - SEE CROSS SECTIONS.
6. BITUMINOUS CONCRETE ISLAND (PAID AS BITUMINOUS CONCRETE DRIVEWAY) SEE STD SHEET HW-921-01 FOR DETAIL.

REV.	DATE	REVISION DESCRIPTION	SHEET NO.

Plotted: 7/30/2010

DESIGNER/DRAFTER:
CHECKED BY:
NOT TO SCALE

STATE OF CONNECTICUT
DEPARTMENT OF TRANSPORTATION

Filename: ...\13_HW_MSH_063_H137-4_TYP-012.dgn

SIGNATURE/BLOCK: LOCHNER
H.W. LOCHNER, INC
2110 Silas Deane Highway
Rocky Hill, CT 06067
APPROVED BY: DATE:

PROJECT TITLE: NEW BRITAIN - HARTFORD BUSWAY HARTFORD NORTH (SECTION B)

TOWN: HARTFORD

DRAWING TITLE: TYPICAL SECTIONS

PROJECT NO. 63-H137
DRAWING NO. TYP-12
SHEET NO. 13

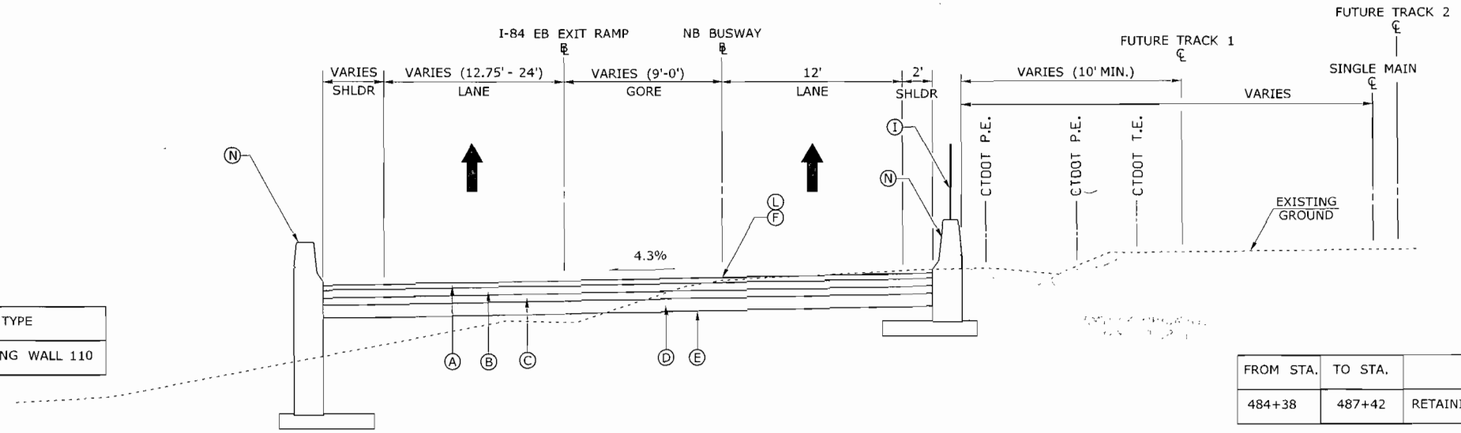

FROM STA.	TO STA.	TYPE
485+51	489+73	RETAINING WALL 110

FROM STA.	TO STA.	TYPE
484+38	487+42	RETAINING WALL 108

BUSWAY
NB BUSWAY STA. 486+24 TO NB BUSWAY STA. 487+42

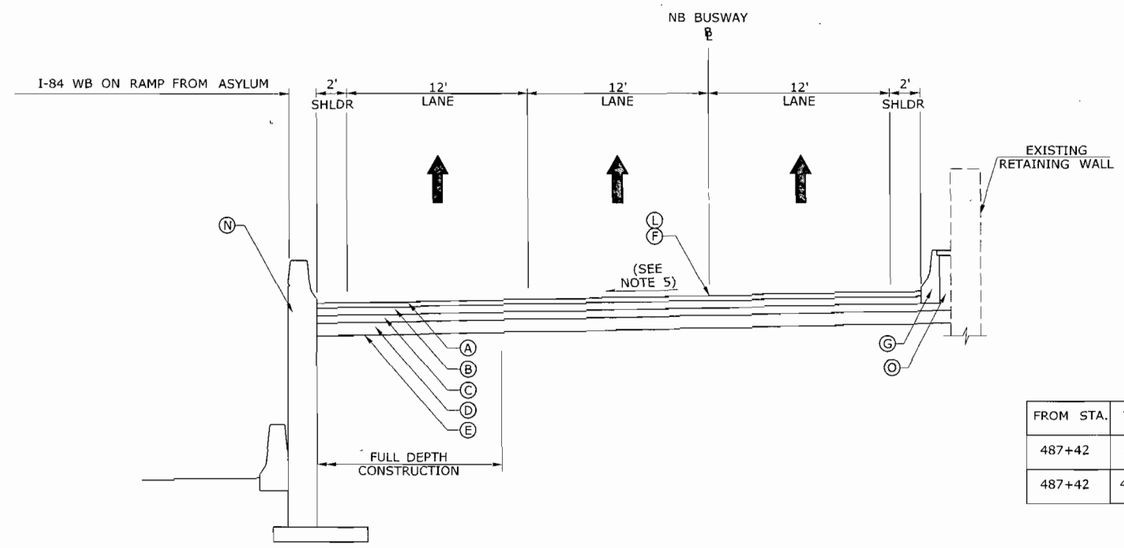

FROM STA.	TO STA.	TYPE
485+51	489+59	RETAINING WALL 110
489+59	489+73	F-SHAPED PCBC

FROM STA.	TO STA.	TYPE
487+42	489+28	F-SHAPED PCBC W/ CONCRETE CAP
487+42	488+67.50	SECTION OF EXISTING RETAINING WALL TO REMAIN

BUSWAY
NB BUSWAY STA. 487+42 TO NB BUSWAY STA. 490+55 (ASYLUM STREET)

LEGEND

- (A) 4.50" HMA S0.5 (PLACED IN 1.50" LIFTS)
- (B) 6" HMA S1
- (C) 6" PROCESSED AGGREGATE BASE
- (D) 10" SUBBASE
- (E) FORMATION OF SUBGRADE
- (F) POINT OF BANK APPLICATION
- (G) PRECAST CONCRETE BARRIER CURB (SEE PLANS FOR TYPE AND LIMITS)
- (H) TURF ESTABLISHMENT
- (I) 6' CHAIN LINK FENCE (BRIDGE)
- (J) 13" CONCRETE FOR PAVEMENT
- (K) 12" SUBBASE
- (L) POINT OF APPLICATION OF GRADE
- (M) CONCRETE STATION PLATFORM (FOR INFORMATION ONLY)
- (N) RETAINING WALL (SEE WALL/BARRIER TABLE)
- (O) CONCRETE CAP AND GRANULAR FILL
- (P) CONCRETE SIDEWALK (SEE PLANS FOR LIMITS)
- (Q) 6" CONCRETE CURBING
- (R) METAL BEAM RAIL (SEE WALL/BARRIER TABLE)
- (S) GRANITE CURB (SEE PLANS FOR LIMITS)
- (T) 6" UNDERDRAIN (SEE PLANS FOR LIMITS)
- (U) FURNISH AND PLACE TOPSOIL
- (V) CAST IN PLACE CONCRETE CURB
- (W) REMOVE AND RESET GRANITE CURB
- (X) BITUMINOUS CONCRETE ISLAND (SEE NOTE 6)
- (Z) TACK COAT
- DIRECTION OF TRAVEL UP STATION
- DIRECTION OF TRAVEL DOWN STATION

NOTES

1. TYPICAL SHOULDER WIDTH IS 4'. SHOULDER WIDTHS OF LESS THAN 4' ARE USED IN RESTRICTIVE LOCATIONS - SEE PLANS FOR LOCATIONS.
2. HIGH-SIDE OF BANK SHOULDER CROSS SLOPE VARIES (4% MAXIMUM) - 7% MAXIMUM DIFFERENCE BETWEEN TRAVEL LANE AND SHOULDER.
3. LOW-SIDE OF BANK SHOULDER CROSS SLOPE VARIES (4% MINIMUM).
4. WHEN THE SHOULDER WIDTH IS LESS THAN 4', THE SHOULDER CROSS SLOPE SHALL BE THE SAME AS THAT OF THE ADJACENT LANE.
5. CROSS SLOPES VARY - SEE CROSS SECTIONS.
6. BITUMINOUS CONCRETE ISLAND (PAID AS BITUMINOUS CONCRETE DRIVEWAY) SEE STD SHEET HW-921-01 FOR DETAIL.

REV.	DATE	REVISION DESCRIPTION	SHEET NO.

Plotted: 7/30/2010

DESIGNER/DRAFTER:
CHECKED BY:
NOT TO SCALE

STATE OF CONNECTICUT
DEPARTMENT OF TRANSPORTATION

Filename: ...\14_HW_MSH_063_H137-4_TYP-013.dgn

SIGNATURE/BLOCK: LOCHNER
H.W. LOCHNER, INC
2110 Silas Deane Highway
Rocky Hill, CT 06067

APPROVED BY: DATE:

PROJECT TITLE: NEW BRITAIN - HARTFORD BUSWAY HARTFORD NORTH (SECTION B)

TOWN: HARTFORD

DRAWING TITLE: TYPICAL SECTIONS

PROJECT NO. 63-H137
DRAWING NO. TYP-13
SHEET NO. 14

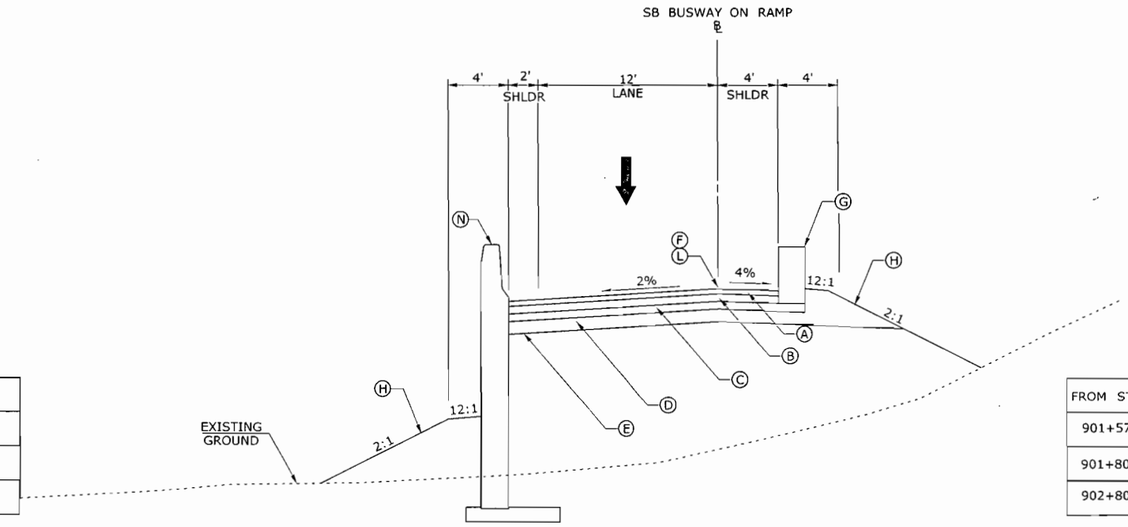

FROM STA.	TO STA.	TYPE
NB BUSWAY STA 472+66	SB BUSWAY STA 901+63	F-SHAPED PCBC
901+63	902+80	SB BUSWAY BRIDGE PARAPET
902+80	904+87	RETAINING WALL 112

FROM STA.	TO STA.	TYPE
901+57	901+80	PCBC TRANSITION
901+80	902+80	SB BUSWAY BRIDGE PARAPET
902+80	908+39	F-SHAPED PCBC

SB BUSWAY ON RAMP

SB BUSWAY STA. 901+57 TO SB BUSWAY STA. 901+80 (BEGIN BRIDGE)
AND
SB BUSWAY STA. 902+80± (END BRIDGE) TO SB BUSWAY STA. 904+87

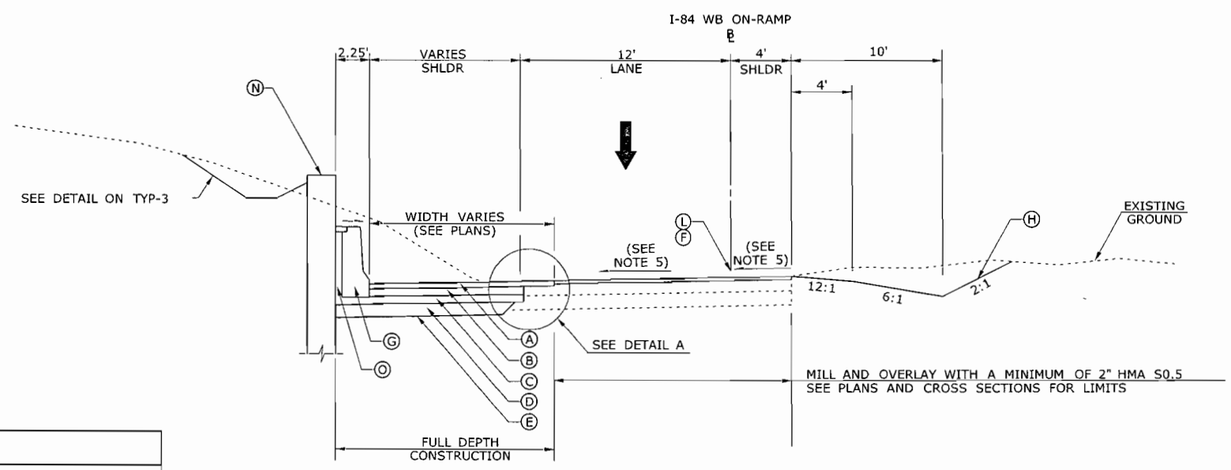

FROM STA.	TO STA.	TYPE
200+23	204+91	RETAINING WALL 111
200+23	204+91	F-SHAPED PCBC W/ CONCRETE CAP

I-84 WB ON-RAMP FROM ASYLUM STREET

STA. 200+04 TO STA. 200+24

LEGEND

- (A) 4.50" HMA S0.5 (PLACED IN 1.50" LIFTS)
- (B) 6" HMA S1
- (C) 6" PROCESSED AGGREGATE BASE
- (D) 10" SUBBASE
- (E) FORMATION OF SUBGRADE
- (F) POINT OF BANK APPLICATION
- (G) PRECAST CONCRETE BARRIER CURB (SEE PLANS FOR TYPE AND LIMITS)
- (H) TURF ESTABLISHMENT
- (I) 6' CHAIN LINK FENCE (BRIDGE)
- (J) 13" CONCRETE FOR PAVEMENT
- (K) 12" SUBBASE
- (L) POINT OF APPLICATION OF GRADE
- (M) CONCRETE STATION PLATFORM (FOR INFORMATION ONLY)
- (N) RETAINING WALL (SEE WALL/BARRIER TABLE)
- (O) CONCRETE CAP AND GRANULAR FILL
- (P) CONCRETE SIDEWALK (SEE PLANS FOR LIMITS)
- (Q) 6" CONCRETE CURBING
- (R) METAL BEAM RAIL (SEE WALL/BARRIER TABLE)
- (S) GRANITE CURB (SEE PLANS FOR LIMITS)
- (T) 6" UNDERDRAIN (SEE PLANS FOR LIMITS)
- (U) FURNISH AND PLACE TOPSOIL
- (V) CAST IN PLACE CONCRETE CURB
- (W) REMOVE AND RESET GRANITE CURB
- (X) BITUMINOUS CONCRETE ISLAND (SEE NOTE 6)
- (Z) TACK COAT
- ↑ DIRECTION OF TRAVEL UP STATION
- ↓ DIRECTION OF TRAVEL DOWN STATION

NOTES

1. TYPICAL SHOULDER WIDTH IS 4'. SHOULDER WIDTHS OF LESS THAN 4' ARE USED IN RESTRICTIVE LOCATIONS - SEE PLANS FOR LOCATIONS.
2. HIGH-SIDE OF BANK SHOULDER CROSS SLOPE VARIES (4% MAXIMUM) - 7% MAXIMUM DIFFERENCE BETWEEN TRAVEL LANE AND SHOULDER.
3. LOW-SIDE OF BANK SHOULDER CROSS SLOPE VARIES (4% MINIMUM).
4. WHEN THE SHOULDER WIDTH IS LESS THAN 4', THE SHOULDER CROSS SLOPE SHALL BE THE SAME AS THAT OF THE ADJACENT LANE.
5. CROSS SLOPES VARY - SEE CROSS SECTIONS.
6. BITUMINOUS CONCRETE ISLAND (PAID AS BITUMINOUS CONCRETE DRIVEWAY) SEE STD SHEET HW-921-01 FOR DETAIL.

REV.	DATE	REVISION DESCRIPTION	SHEET NO.

Plotted: 7/30/2010

DESIGNER/DRAFTER:
CHECKED BY:
NOT TO SCALE

STATE OF CONNECTICUT
DEPARTMENT OF TRANSPORTATION

Filename: ...\15_HW_MSH_063_H137-4_TYP-014.dgn

SIGNATURE/BLOCK: LOCHNER
H.W. LOCHNER, INC
2110 Silas Deane Highway
Rocky Hill, CT 06067

APPROVED BY: DATE:

PROJECT TITLE: NEW BRITAIN - HARTFORD BUSWAY HARTFORD NORTH (SECTION B)

TOWN: HARTFORD

DRAWING TITLE: TYPICAL SECTIONS

PROJECT NO. 63-H137
DRAWING NO. TYP-14
SHEET NO. 15

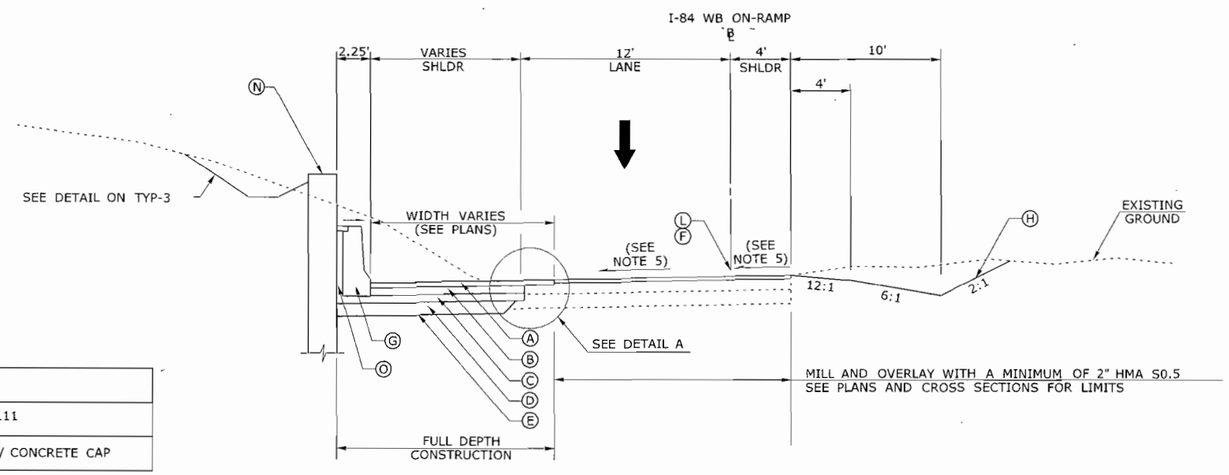

FROM STA.	TO STA.	TYPE
200+23	204+91	RETAINING WALL 111
200+23	204+91	F-SHAPED PCBC W/ CONCRETE CAP

I-84 WB ON-RAMP FROM ASYLUM STREET
STA. 200+24 TO STA. 201+23

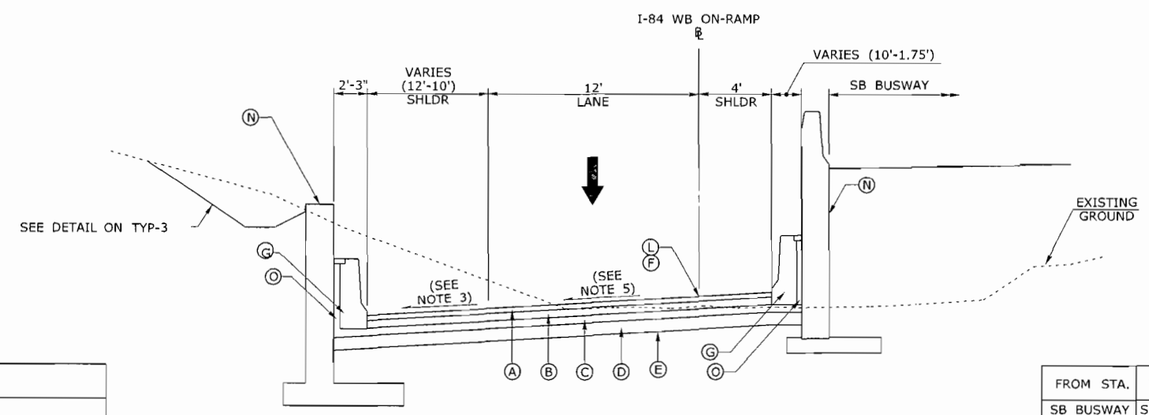

FROM STA.	TO STA.	TYPE
200+23	204+91	RETAINING WALL 111
200+23	204+91	F-SHAPED PCBC W/ CONCRETE CAP

FROM STA.	TO STA.	TYPE
SB BUSWAY STA 902+80	SB BUSWAY STA 904+87	RETAINING WALL 112
201+23	202+86	F-SHAPED PCBC W/ CONCRETE CAP

I-84 WB ON-RAMP FROM ASYLUM STREET
STA. 201+23 TO STA. 202+70

LEGEND

- (A) 4.50" HMA S0.5 (PLACED IN 1.50" LIFTS)
- (B) 6" HMA S1
- (C) 6" PROCESSED AGGREGATE BASE
- (D) 10" SUBBASE
- (E) FORMATION OF SUBGRADE
- (F) POINT OF BANK APPLICATION
- (G) PRECAST CONCRETE BARRIER CURB (SEE PLANS FOR TYPE AND LIMITS)
- (H) TURF ESTABLISHMENT
- (I) 6' CHAIN LINK FENCE (BRIDGE)
- (J) 13" CONCRETE FOR PAVEMENT
- (K) 12" SUBBASE
- (L) POINT OF APPLICATION OF GRADE
- (M) CONCRETE STATION PLATFORM (FOR INFORMATION ONLY)
- (N) RETAINING WALL (SEE WALL/BARRIER TABLE)
- (O) CONCRETE CAP AND GRANULAR FILL
- (P) CONCRETE SIDEWALK (SEE PLANS FOR LIMITS)
- (Q) 6" CONCRETE CURBING
- (R) METAL BEAM RAIL (SEE WALL/BARRIER TABLE)
- (S) GRANITE CURB (SEE PLANS FOR LIMITS)
- (T) 6" UNDERDRAIN (SEE PLANS FOR LIMITS)
- (U) FURNISH AND PLACE TOPSOIL
- (V) CAST IN PLACE CONCRETE CURB
- (W) REMOVE AND RESET GRANITE CURB
- (X) BITUMINOUS CONCRETE ISLAND (SEE NOTE 6)
- (Z) TACK COAT
- ↑ DIRECTION OF TRAVEL UP STATION
- ↓ DIRECTION OF TRAVEL DOWN STATION

NOTES

1. TYPICAL SHOULDER WIDTH IS 4'. SHOULDER WIDTHS OF LESS THAN 4' ARE USED IN RESTRICTIVE LOCATIONS - SEE PLANS FOR LOCATIONS.
2. HIGH-SIDE OF BANK SHOULDER CROSS SLOPE VARIES (4% MAXIMUM) - 7% MAXIMUM DIFFERENCE BETWEEN TRAVEL LANE AND SHOULDER.
3. LOW-SIDE OF BANK SHOULDER CROSS SLOPE VARIES (4% MINIMUM).
4. WHEN THE SHOULDER WIDTH IS LESS THAN 4', THE SHOULDER CROSS SLOPE SHALL BE THE SAME AS THAT OF THE ADJACENT LANE.
5. CROSS SLOPES VARY - SEE CROSS SECTIONS.
6. BITUMINOUS CONCRETE ISLAND (PAID AS BITUMINOUS CONCRETE DRIVEWAY) SEE STD SHEET HW-921-01 FOR DETAIL.

REV.	DATE	REVISION DESCRIPTION	SHEET NO.

Plotted: 7/30/2010

DESIGNER/DRAFTER:
CHECKED BY:
NOT TO SCALE

STATE OF CONNECTICUT
DEPARTMENT OF TRANSPORTATION

Filename: ...\16_HW_MSH_063_H137-4_TYP-015.dgn

SIGNATURE/BLOCK: LOCHNER
H.W. LOCHNER, INC
2110 Silas Deane Highway
Rocky Hill, CT 06067

APPROVED BY: DATE:

PROJECT TITLE: NEW BRITAIN - HARTFORD BUSWAY HARTFORD NORTH (SECTION B)

TOWN: HARTFORD

DRAWING TITLE: TYPICAL SECTIONS

PROJECT NO. 63-H137
DRAWING NO. TYP-15
SHEET NO. 16

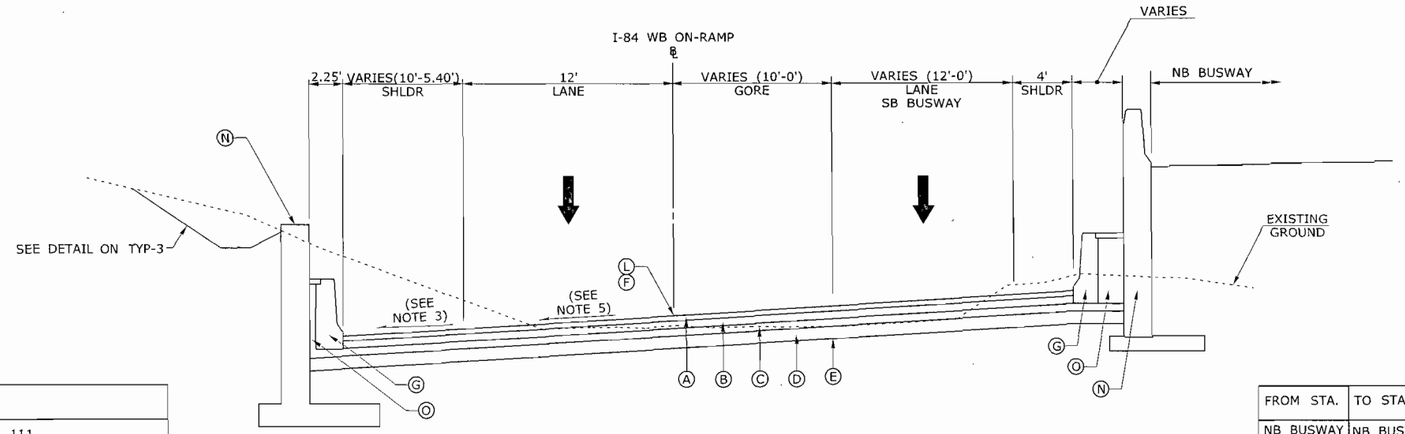

FROM STA.	TO STA.	TYPE
200+23	204+91	RETAINING WALL 111
200+23	204+91	F-SHAPED PCBC W/ CONCRETE CAP

FROM STA.	TO STA.	TYPE
NB BUSWAY STA 485+51	NB BUSWAY STA 489+59	RETAINING WALL 110
NB BUSWAY STA 489+59	NB BUSWAY STA 489+73	F-SHAPED PCBC

I-84 WB ON-RAMP FROM ASYLUM STREET
ASYLUM STREET STA. 202+70 TO ASYLUM STREET STA. 205+33

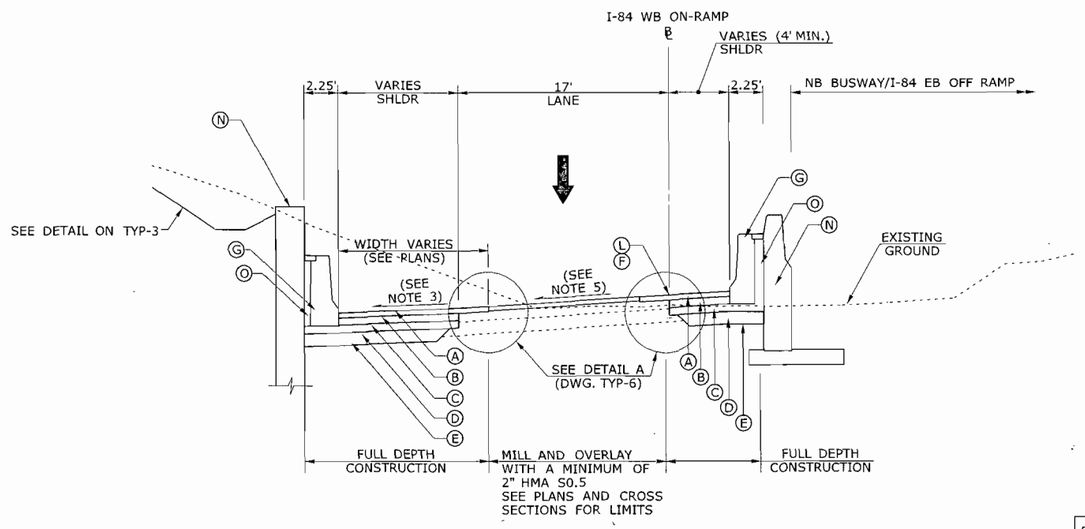

FROM STA.	TO STA.	TYPE
200+23	204+91	RETAINING WALL 111
200+23	204+91	F-SHAPED PCBC W/ CONCRETE CAP

FROM STA.	TO STA.	TYPE
NB BUSWAY STA 485+51	NB BUSWAY STA 489+59	RETAINING WALL 110
NB BUSWAY STA 489+59	NB BUSWAY STA 489+73	F-SHAPED PCBC

I-84 WB ON-RAMP FROM ASYLUM STREET
ASYLUM STREETSTA. 205+33 TO ASYLUM STREET STA. 206+74

LEGEND

- (A) 4.50" HMA S0.5 (PLACED IN 1.50" LIFTS)
- (B) 6" HMA S1
- (C) 6" PROCESSED AGGREGATE BASE
- (D) 10" SUBBASE
- (E) FORMATION OF SUBGRADE
- (F) POINT OF BANK APPLICATION
- (G) PRECAST CONCRETE BARRIER CURB (SEE PLANS FOR TYPE AND LIMITS)
- (H) TURF ESTABLISHMENT
- (I) 6' CHAIN LINK FENCE (BRIDGE)
- (J) 13" CONCRETE FOR PAVEMENT
- (K) 12" SUBBASE
- (L) POINT OF APPLICATION OF GRADE
- (M) CONCRETE STATION PLATFORM (FOR INFORMATION ONLY)
- (N) RETAINING WALL (SEE WALL/BARRIER TABLE)
- (O) CONCRETE CAP AND GRANULAR FILL
- (P) CONCRETE SIDEWALK (SEE PLANS FOR LIMITS)
- (Q) 6" CONCRETE CURBING
- (R) METAL BEAM RAIL (SEE WALL/BARRIER TABLE)
- (S) GRANITE CURB (SEE PLANS FOR LIMITS)
- (T) 6" UNDERDRAIN (SEE PLANS FOR LIMITS)
- (U) FURNISH AND PLACE TOPSOIL
- (V) CAST IN PLACE CONCRETE CURB
- (W) REMOVE AND RESET GRANITE CURB
- (X) BITUMINOUS CONCRETE ISLAND (SEE NOTE 6)
- (Z) TACK COAT
- ↑ DIRECTION OF TRAVEL UP STATION
- ↓ DIRECTION OF TRAVEL DOWN STATION

NOTES

1. TYPICAL SHOULDER WIDTH IS 4'. SHOULDER WIDTHS OF LESS THAN 4' ARE USED IN RESTRICTIVE LOCATIONS - SEE PLANS FOR LOCATIONS.
2. HIGH-SIDE OF BANK SHOULDER CROSS SLOPE VARIES (4% MAXIMUM) - 7% MAXIMUM DIFFERENCE BETWEEN TRAVEL LANE AND SHOULDER.
3. LOW-SIDE OF BANK SHOULDER CROSS SLOPE VARIES (4% MINIMUM).
4. WHEN THE SHOULDER WIDTH IS LESS THAN 4', THE SHOULDER CROSS SLOPE SHALL BE THE SAME AS THAT OF THE ADJACENT LANE.
5. CROSS SLOPES VARY - SEE CROSS SECTIONS.
6. BITUMINOUS CONCRETE ISLAND (PAID AS BITUMINOUS CONCRETE DRIVEWAY) SEE STD SHEET HW-921-01 FOR DETAIL.

REV.	DATE	REVISION DESCRIPTION	SHEET NO.	Plotted: 7/30/2010

DESIGNER/DRAFTER:
CHECKED BY:
NOT TO SCALE

STATE OF CONNECTICUT
DEPARTMENT OF TRANSPORTATION
Filename: ...\17_HW_MSH_063_H137-4_TYP-016.dgn

SIGNATURE/BLOCK: LOCHNER
H.W. LOCHNER, INC
2110 Silas Deane Highway
Rocky Hill, CT 06067
APPROVED BY: DATE:

PROJECT TITLE: NEW BRITAIN - HARTFORD BUSWAY HARTFORD NORTH (SECTION B)

TOWN: HARTFORD
DRAWING TITLE: TYPICAL SECTIONS

PROJECT NO. 63-H137
DRAWING NO. TYP-16
SHEET NO. 17

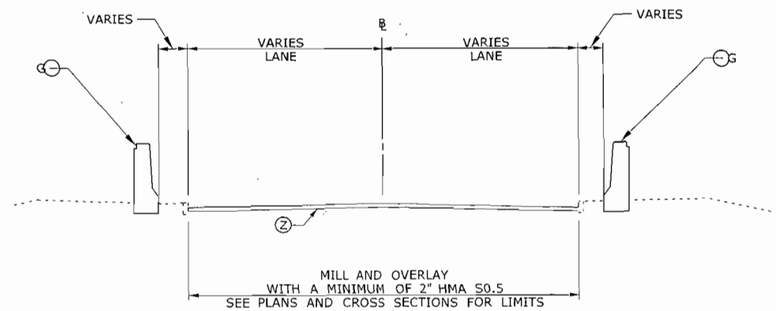

FROM STA.	TO STA.	TYPE
NB BUSWAY STA 471+00	FLOWER STREET STA 10+59.50	VERTICAL FACE PCBC

FROM STA.	TO STA.	TYPE
NB BUSWAY STA 482+91	FLOWER STREET STA 10+88	VERTICAL FACE PCBC

FLOWER STREET
STA. 10+00 TO STA. 10+72

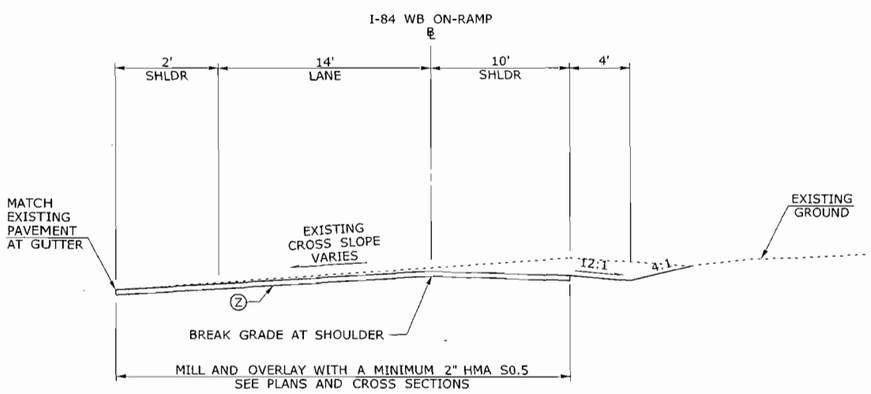

I-84 WB ON RAMP FROM CAPITAL AVENUE
STA. 303+60 TO STA. 305+80

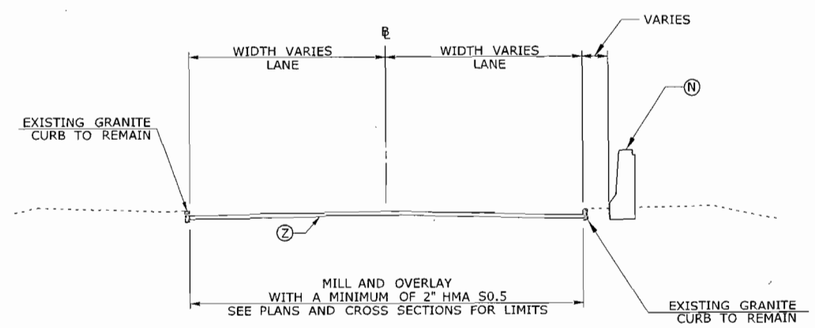

FLOWER STREET
STA. 10+72 TO STA. 10+92

FROM STA.	TO STA.	TYPE
NB BUSWAY STA 482+91	FLOWER STREET STA 10+88	VERTICAL FACE PCBC

LEGEND

- (A) 4.50" HMA S0.5 (PLACED IN 1.50" LIFTS)
- (B) 6" HMA S1
- (C) 6" PROCESSED AGGREGATE BASE
- (D) 10" SUBBASE
- (E) FORMATION OF SUBGRADE
- (F) POINT OF BANK APPLICATION
- (G) PRECAST CONCRETE BARRIER CURB (SEE PLANS FOR TYPE AND LIMITS)
- (H) TURF ESTABLISHMENT
- (I) 6' CHAIN LINK FENCE (BRIDGE)
- (J) 13" CONCRETE FOR PAVEMENT
- (K) 12" SUBBASE
- (L) POINT OF APPLICATION OF GRADE
- (M) CONCRETE STATION PLATFORM (FOR INFORMATION ONLY)
- (N) RETAINING WALL (SEE WALL/BARRIER TABLE)
- (O) CONCRETE CAP AND GRANULAR FILL
- (P) CONCRETE SIDEWALK (SEE PLANS FOR LIMITS)
- (Q) 6" CONCRETE CURBING
- (R) METAL BEAM RAIL (SEE WALL/BARRIER TABLE)
- (S) GRANITE CURB (SEE PLANS FOR LIMITS)
- (T) 6" UNDERDRAIN (SEE PLANS FOR LIMITS)
- (U) FURNISH AND PLACE TOPSOIL
- (V) CAST IN PLACE CONCRETE CURB
- (W) REMOVE AND RESET GRANITE CURB
- (X) BITUMINOUS CONCRETE ISLAND (SEE NOTE 6)
- (Z) TACK COAT
- ↑ DIRECTION OF TRAVEL UP STATION
- ↓ DIRECTION OF TRAVEL DOWN STATION

NOTES

1. TYPICAL SHOULDER WIDTH IS 4'. SHOULDER WIDTHS OF LESS THAN 4' ARE USED IN RESTRICTIVE LOCATIONS - SEE PLANS FOR LOCATIONS.
2. HIGH-SIDE OF BANK SHOULDER CROSS SLOPE VARIES (4% MAXIMUM) - 7% MAXIMUM DIFFERENCE BETWEEN TRAVEL LANE AND SHOULDER.
3. LOW-SIDE OF BANK SHOULDER CROSS SLOPE VARIES (4% MINIMUM).
4. WHEN THE SHOULDER WIDTH IS LESS THAN 4', THE SHOULDER CROSS SLOPE SHALL BE THE SAME AS THAT OF THE ADJACENT LANE.
5. CROSS SLOPES VARY - SEE CROSS SECTIONS.
6. BITUMINOUS CONCRETE ISLAND (PAID AS BITUMINOUS CONCRETE DRIVEWAY) SEE STD SHEET HW-921-01 FOR DETAIL.

REV.	DATE	REVISION DESCRIPTION	SHEET NO.

Plotted: 7/30/2010

DESIGNER/DRAFTER:
CHECKED BY:
NOT TO SCALE

STATE OF CONNECTICUT
DEPARTMENT OF TRANSPORTATION

Filename: ...\18_HW_MSH_063_H137-4_TYP-017.dgn

SIGNATURE/BLOCK: LOCHNER
H.W. LOCHNER, INC
2110 Silas Deane Highway
Rocky Hill, CT 06067
APPROVED BY: DATE:

PROJECT TITLE: NEW BRITAIN - HARTFORD BUSWAY HARTFORD NORTH (SECTION B)

TOWN: HARTFORD

DRAWING TITLE: TYPICAL SECTIONS

PROJECT NO. 63-H137
DRAWING NO. TYP-17
SHEET NO. 18

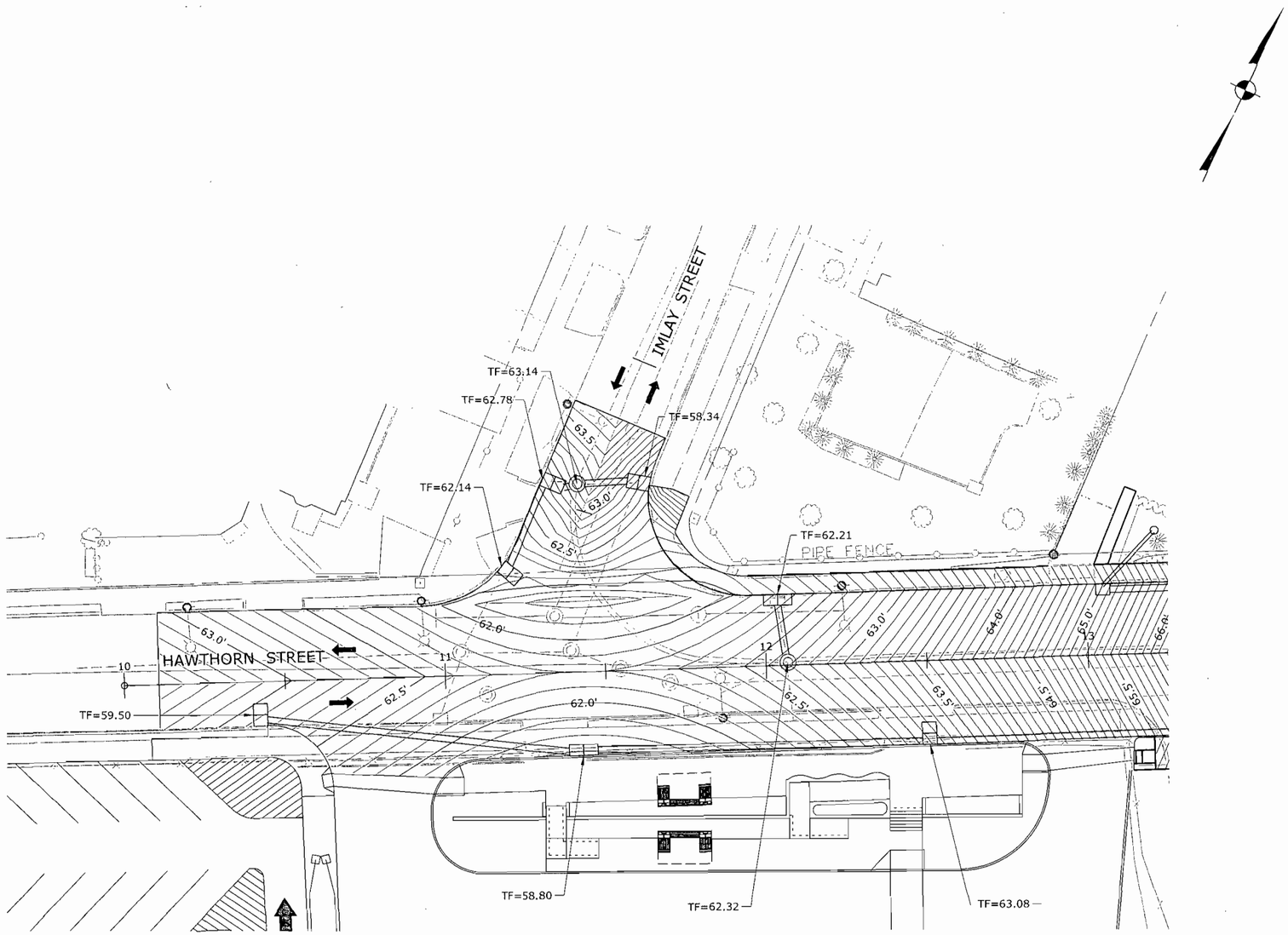

REV.	DATE	REVISION DESCRIPTION	SHEET NO.

Plotted: 7/30/2010

DESIGNER/DRAFTER:

CHECKED BY:

SCALE IN FEET
0 20 40
SCALE 1"=20'

STATE OF CONNECTICUT
DEPARTMENT OF TRANSPORTATION

Filename: ...\19_HW_MST_063_H137-3_GRA-001.dgn

SIGNATURE/BLOCK:
LOCHNER
H.W. LOCHNER, INC
2110 Silas Deane Highway
Rocky Hill, CT 06067

APPROVED BY: DATE:

PROJECT TITLE:
NEW BRITAIN - HARTFORD
BUSWAY HARTFORD NORTH
(SECTION A)

TOWN:
HARTFORD

DRAWING TITLE:
HAWTHORN ST/IMLAY ST
INTERSECTION GRADING PLAN

PROJECT NO.
63-H137

DRAWING NO.
GRA-01

SHEET NO.
19

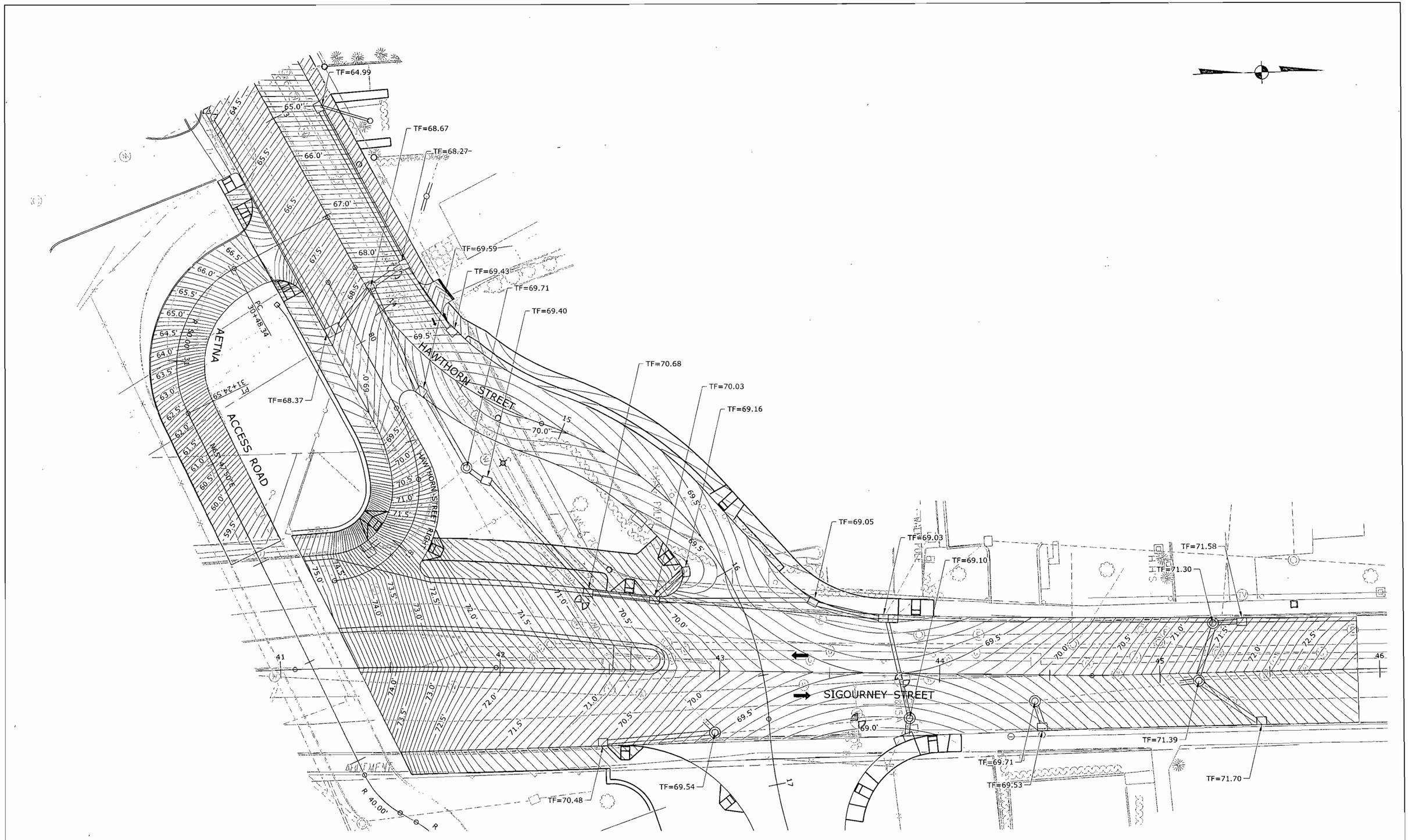

REV.	DATE	REVISION DESCRIPTION	SHEET NO.

Plotted: 7/30/2010

DESIGNER/DRAFTER:

CHECKED BY:

SCALE IN FEET
0 20 40
SCALE 1"=20'

STATE OF CONNECTICUT
DEPARTMENT OF TRANSPORTATION

Filename: ...\20_HW_MST_063_H137-3_GRA-002.dgn

SIGNATURE/ BLOCK:

LOCHNER
H.W. LOCHNER, INC
2110 Silas Deane Highway
Rocky Hill, CT 06067

APPROVED BY: DATE:

PROJECT TITLE:
NEW BRITAIN - HARTFORD BUSWAY HARTFORD NORTH (SECTION A)

TOWN:
HARTFORD

DRAWING TITLE:
HAWTHORN ST/SIGOURNEY ST INTERSECTION GRADING PLAN

PROJECT NO.
63-H137

DRAWING NO.
GRA-02

SHEET NO.
20

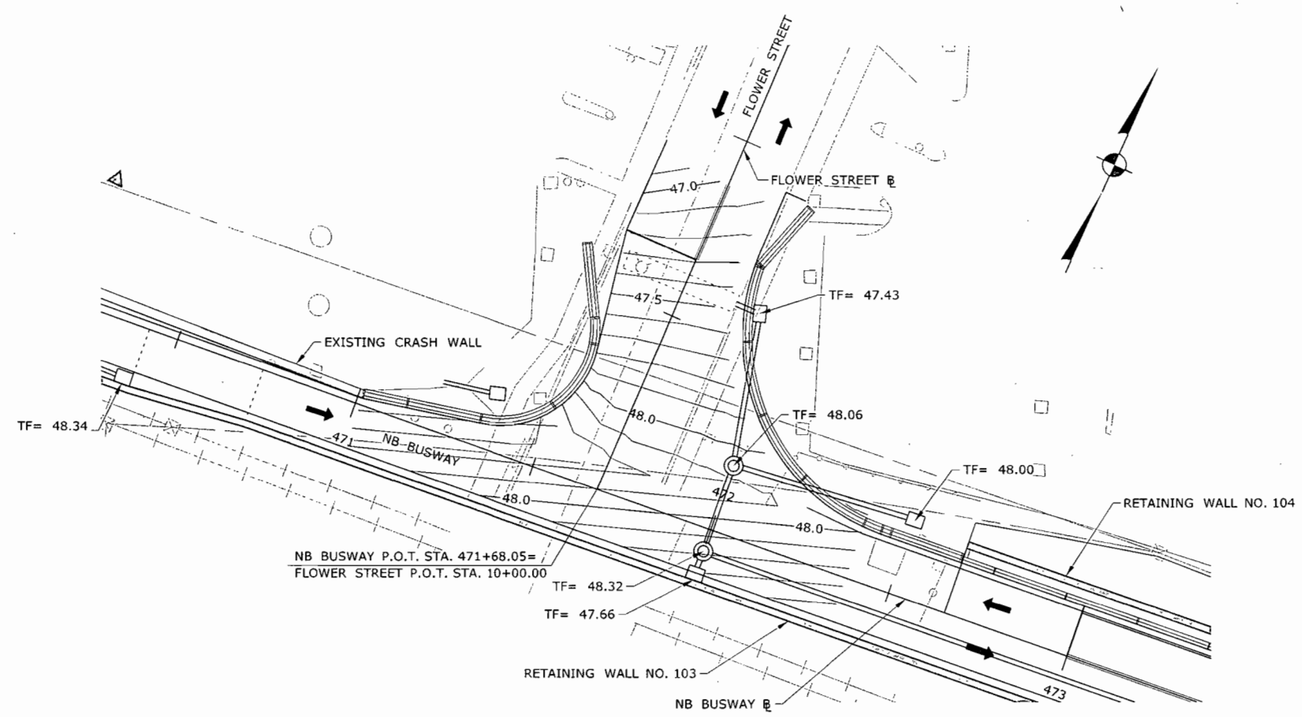

REV.	DATE	REVISION DESCRIPTION	SHEET NO.

THE INFORMATION, INCLUDING ESTIMATED QUANTITIES OF WORK, SHOWN ON THESE SHEETS IS BASED ON LIMITED INVESTIGATIONS BY THE STATE AND IS IN NO WAY WARRANTED TO INDICATE THE CONDITIONS OF ACTUAL QUANTITIES OF WORK WHICH WILL BE REQUIRED.

Plotted: 7/30/2010

DESIGNER/DRAFTER:

CHECKED BY:

SCALE IN FEET
0 20 40
SCALE 1"=20'

STATE OF CONNECTICUT
DEPARTMENT OF TRANSPORTATION

Filename: ...\21_HW_MST_063_H137-4_GRA-003.dgn

SIGNATURE/ BLOCK:
LOCHNER
H.W. LOCHNER, INC
2110 Silas Deane Highway
Rocky Hill, CT 06067

APPROVED BY: DATE:

PROJECT TITLE:
NEW BRITAIN - HARTFORD BUSWAY HARTFORD NORTH (SECTION B)

TOWN:
HARTFORD

DRAWING TITLE:
FLOWER ST/NB BUSWAY INTERSECTION GRADING PLAN

PROJECT NO.
63-H137

DRAWING NO.
GRA-03

SHEET NO.
21

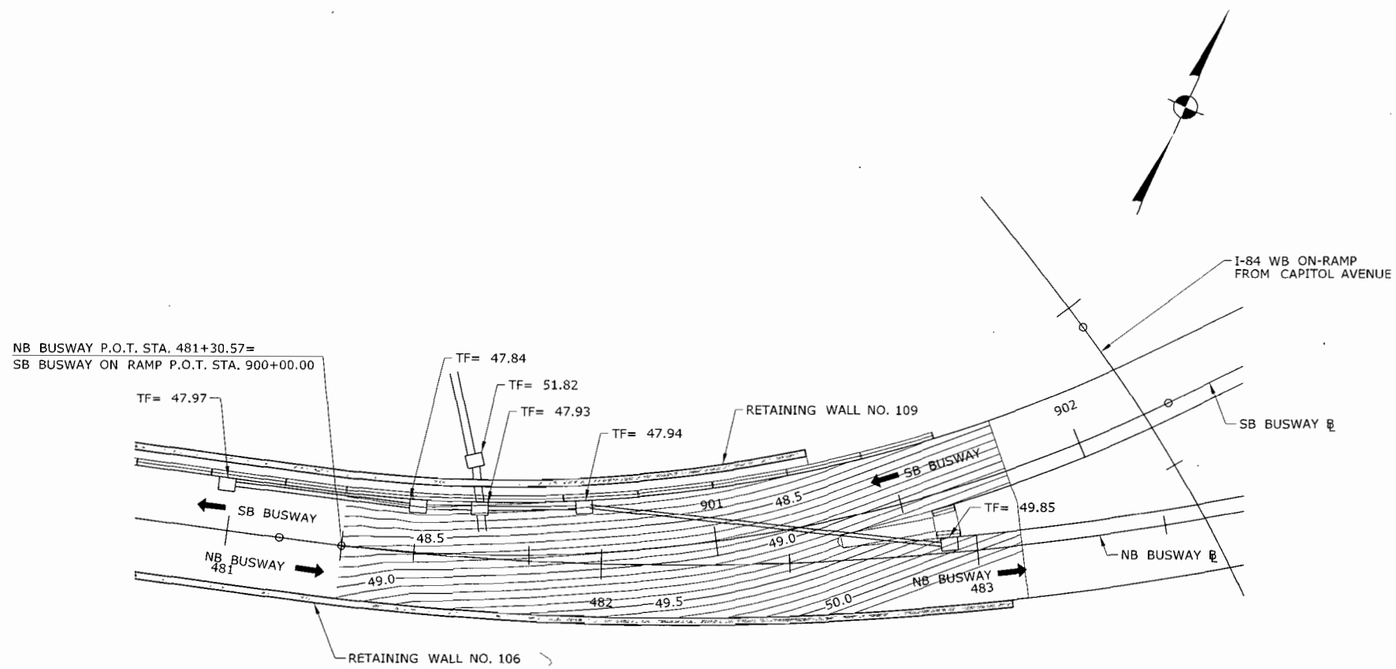

REV.	DATE	REVISION DESCRIPTION	SHEET NO.

THE INFORMATION, INCLUDING ESTIMATED QUANTITIES OF WORK, SHOWN ON THESE SHEETS IS BASED ON LIMITED INVESTIGATIONS BY THE STATE AND IS IN NO WAY WARRANTED TO INDICATE THE CONDITIONS OF ACTUAL QUANTITIES OF WORK WHICH WILL BE REQUIRED.

Plotted: 7/30/2010

DESIGNER/DRAFTER:

CHECKED BY:

SCALE IN FEET
0 20 40
SCALE 1"=20'

STATE OF CONNECTICUT
DEPARTMENT OF TRANSPORTATION

Filename: ...\22_HW_MST_063_H137-4_GRA-004.dgn

SIGNATURE/BLOCK:
LOCHNER
H.W. LOCHNER, INC
2110 Silas Deane Highway
Rocky Hill, CT 06067

APPROVED BY: DATE:

PROJECT TITLE:
NEW BRITAIN - HARTFORD
BUSWAY HARTFORD NORTH
(SECTION B)

TOWN:
HARTFORD

DRAWING TITLE:
GORE GRADING PLAN

PROJECT NO.
63-H137

DRAWING NO.
GRA-04

SHEET NO.
22

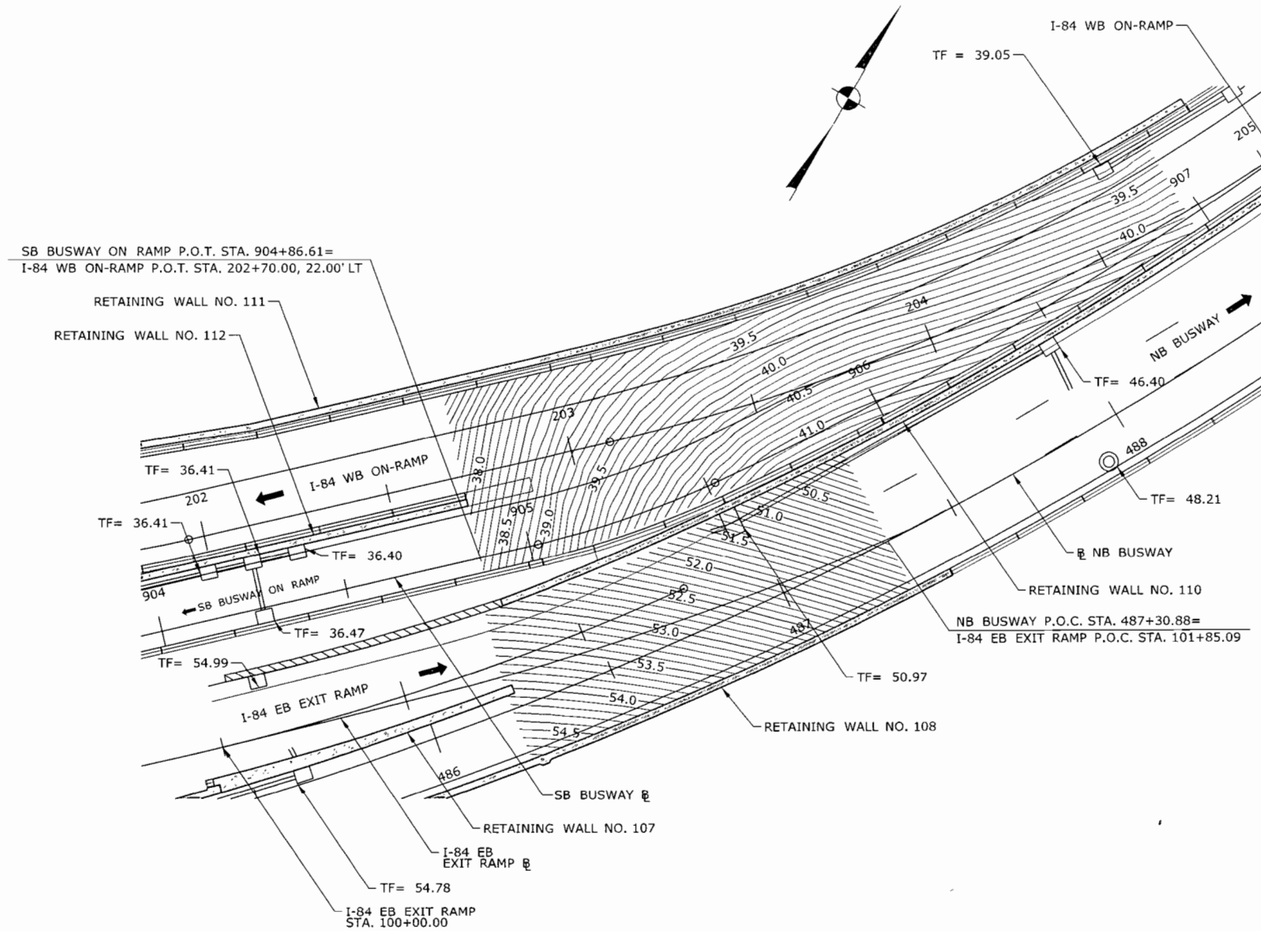

REV.	DATE	REVISION DESCRIPTION	SHEET NO.

THE INFORMATION, INCLUDING ESTIMATED QUANTITIES OF WORK SHOWN ON THESE SHEETS IS BASED ON LIMITED INVESTIGATIONS BY THE STATE AND IS IN NO WAY WARRANTED TO INDICATE THE CONDITIONS OF ACTUAL QUANTITIES OF WORK WHICH WILL BE REQUIRED.

Plotted: 7/30/2010

DESIGNER/DRAFTER:

CHECKED BY:

SCALE IN FEET
0 20 40
SCALE 1"=20'

STATE OF CONNECTICUT
DEPARTMENT OF TRANSPORTATION

Filename: ...\23_HW_MST_063_H137-4_GRA-005.dgn

SIGNATURE/ BLOCK:
LOCHNER
H.W. LOCHNER, INC
2110 Silas Deane Highway
Rocky Hill, CT 06067

APPROVED BY: DATE:

PROJECT TITLE:
NEW BRITAIN - HARTFORD
BUSWAY HARTFORD NORTH
(SECTION B)

TOWN:
HARTFORD

DRAWING TITLE:
GORE GRADING PLAN

PROJECT NO.
63-H137

DRAWING NO.
GRA-05

SHEET NO.
23

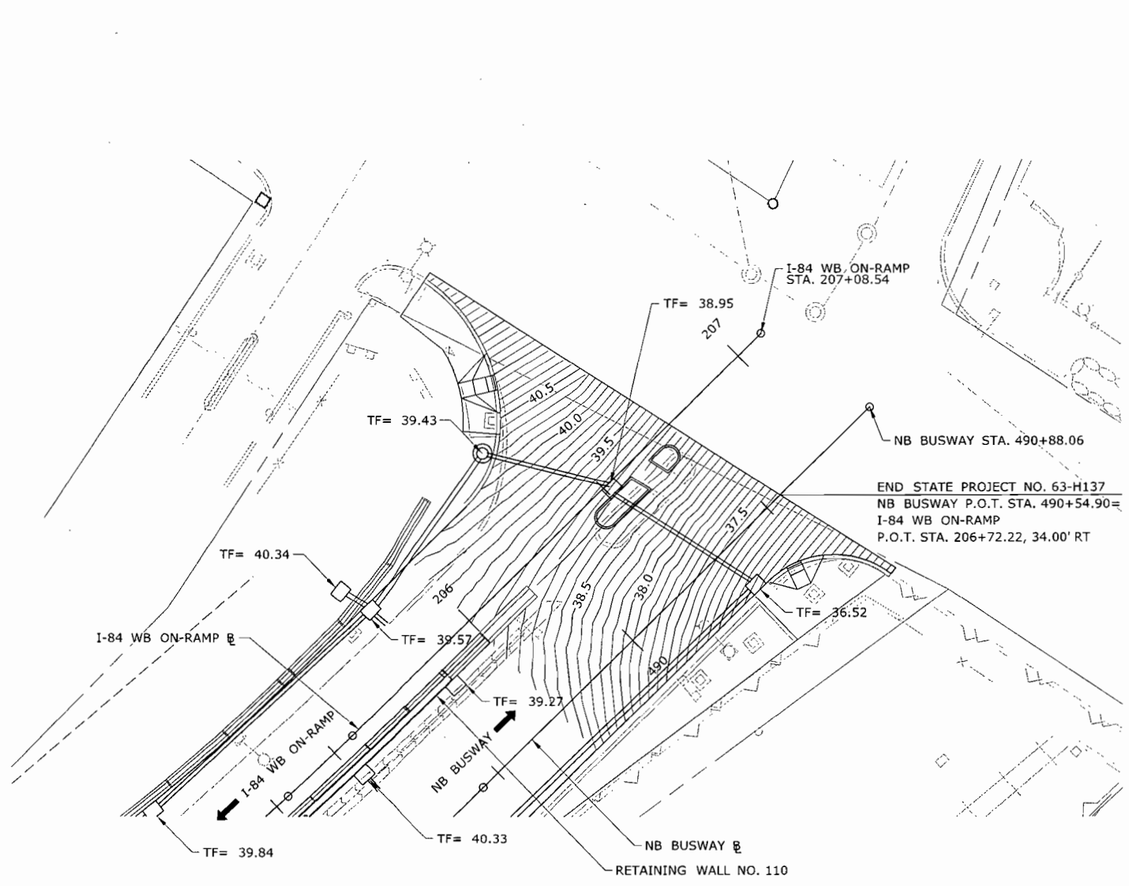

REV.	DATE	REVISION DESCRIPTION	SHEET NO.

THE INFORMATION, INCLUDING ESTIMATED QUANTITIES OF WORK, SHOWN ON THESE SHEETS IS BASED ON LIMITED INVESTIGATIONS BY THE STATE AND IS IN NO WAY WARRANTED TO INDICATE THE CONDITIONS OF ACTUAL QUANTITIES OF WORK WHICH WILL BE REQUIRED.

Plotted: 7/30/2010

DESIGNER/DRAFTER:

CHECKED BY:

SCALE IN FEET
0 20 40
SCALE 1"=20'

STATE OF CONNECTICUT
DEPARTMENT OF TRANSPORTATION

Filename: ...\24_HW_MST_063_H137-4_GRA-006.dgn

SIGNATURE/ BLOCK:
LOCHNER
H.W. LOCHNER, INC.
2110 Silas Deane Highway
Rocky Hill, CT 06067

APPROVED BY: DATE:

PROJECT TITLE:
NEW BRITAIN - HARTFORD
BUSWAY HARTFORD NORTH
(SECTION B)

TOWN:
HARTFORD

DRAWING TITLE:
NB BUSWAY/ASYLUM
INTERSECTION GRADING PLAN

PROJECT NO.
63-H137

DRAWING NO.
GRA-06

SHEET NO.
24

NOTES

1. SEE DRAWING NO. HWY-02 FOR LOCAL ROAD INFORMATION.
2. SINGLE MAIN TRACK SHALL BE ACTIVE TRACK DURING PROJECT 63-H137.
3. FOR PROPOSED DRAINAGE INFORMATION SEE DRAINAGE PLANS.

LEGEND

CONCRETE PAVEMENT

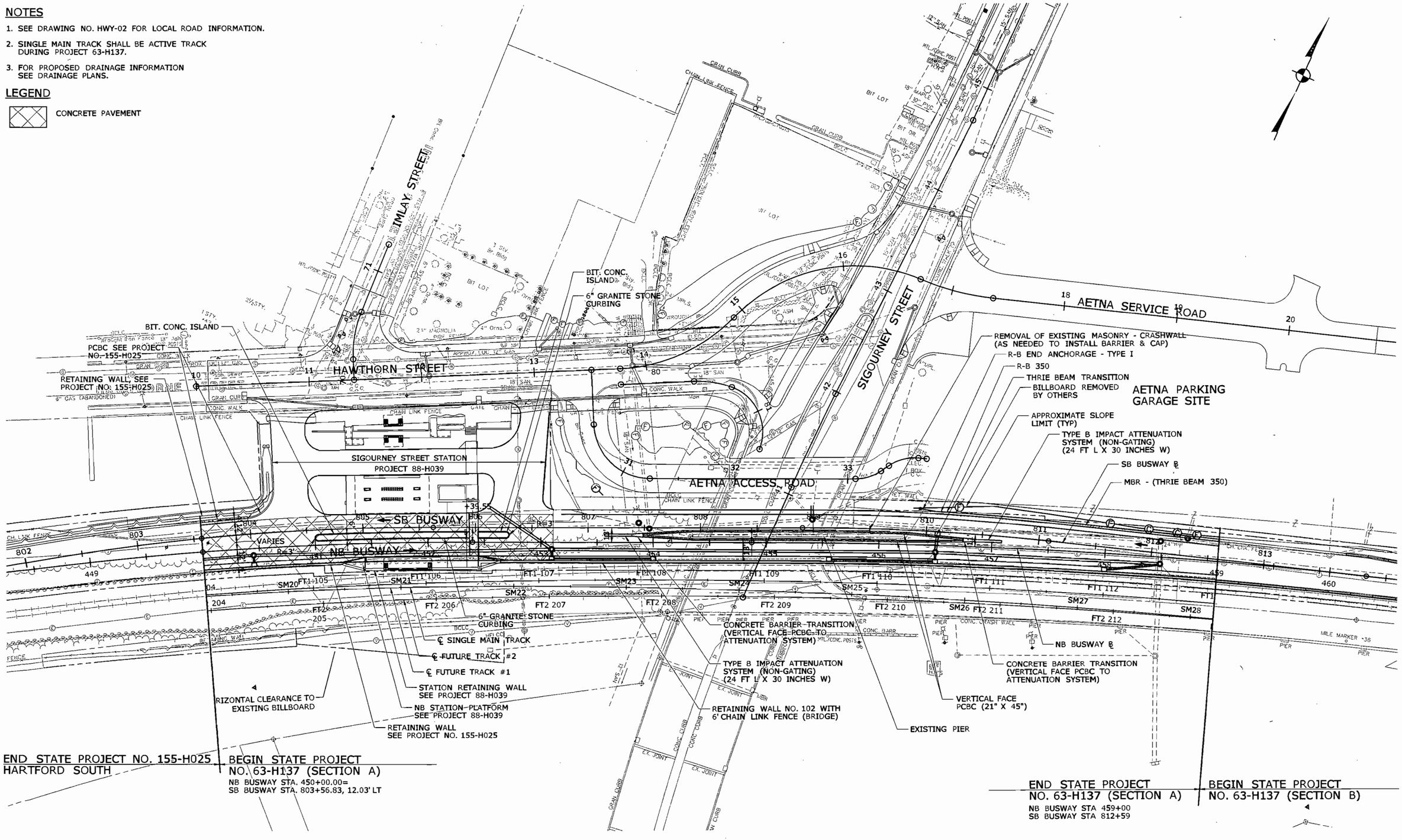

REV.	DATE	REVISION DESCRIPTION	SHEET NO.

Plotted: 7/30/2010

DESIGNER/DRAFTER:

CHECKED BY:

SCALE IN FEET 0 40 80

SCALE 1"=40'

STATE OF CONNECTICUT
DEPARTMENT OF TRANSPORTATION

Filename: ...\25_HW_MSH_063_H137-3_PLN-001.dgn

SIGNATURE/BLOCK: LOCHNER
H.W. LOCHNER, INC
2110 Silas Deane Highway
Rocky Hill, CT 06067

APPROVED BY: DATE:

PROJECT TITLE: NEW BRITAIN - HARTFORD BUSWAY HARTFORD NORTH (SECTION A)

TOWN: HARTFORD

DRAWING TITLE: ROADWAY PLAN

PROJECT NO. 63-H137

DRAWING NO. HWY-01

SHEET NO. 25

NOTES

1. SEE DRAWING NO. HWY-01 FOR BUSWAY PLAN INFORMATION
2. SINGLE MAIN TRACK SHALL BE ACTIVE TRACK DURING PROJECT 63-H137

LEGEND

MILL AND OVERLAY (2" HMA S0.5)

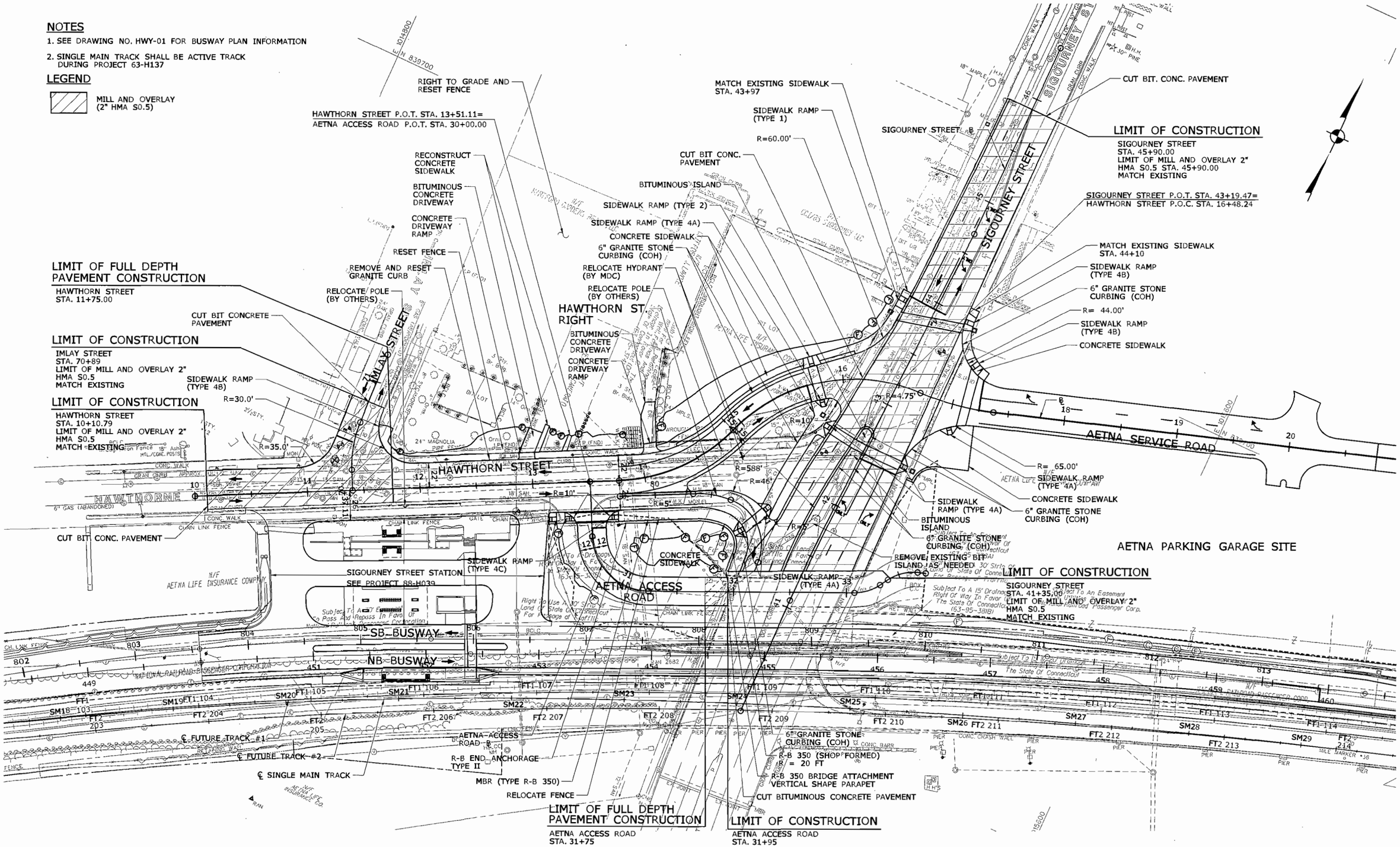

REV.	DATE	REVISION DESCRIPTION	SHEET NO.

Plotted: 7/30/2010

DESIGNER/DRAFTER:

CHECKED BY:

SCALE IN FEET 0 40 80

SCALE 1"=40'

STATE OF CONNECTICUT
DEPARTMENT OF TRANSPORTATION

Filename: ...\26_HW_MSH_063_H137-3_PLN-002.dgn

SIGNATURE/BLOCK: LOCHNER
H.W. LOCHNER, INC
2110 Silas Deane Highway
Rocky Hill, CT 06067

APPROVED BY: DATE:

PROJECT TITLE: NEW BRITAIN - HARTFORD BUSWAY HARTFORD NORTH (SECTION A)

TOWN: HARTFORD

DRAWING TITLE: ROADWAY PLAN

PROJECT NO. 63-H137

DRAWING NO. HWY-02

SHEET NO. 26

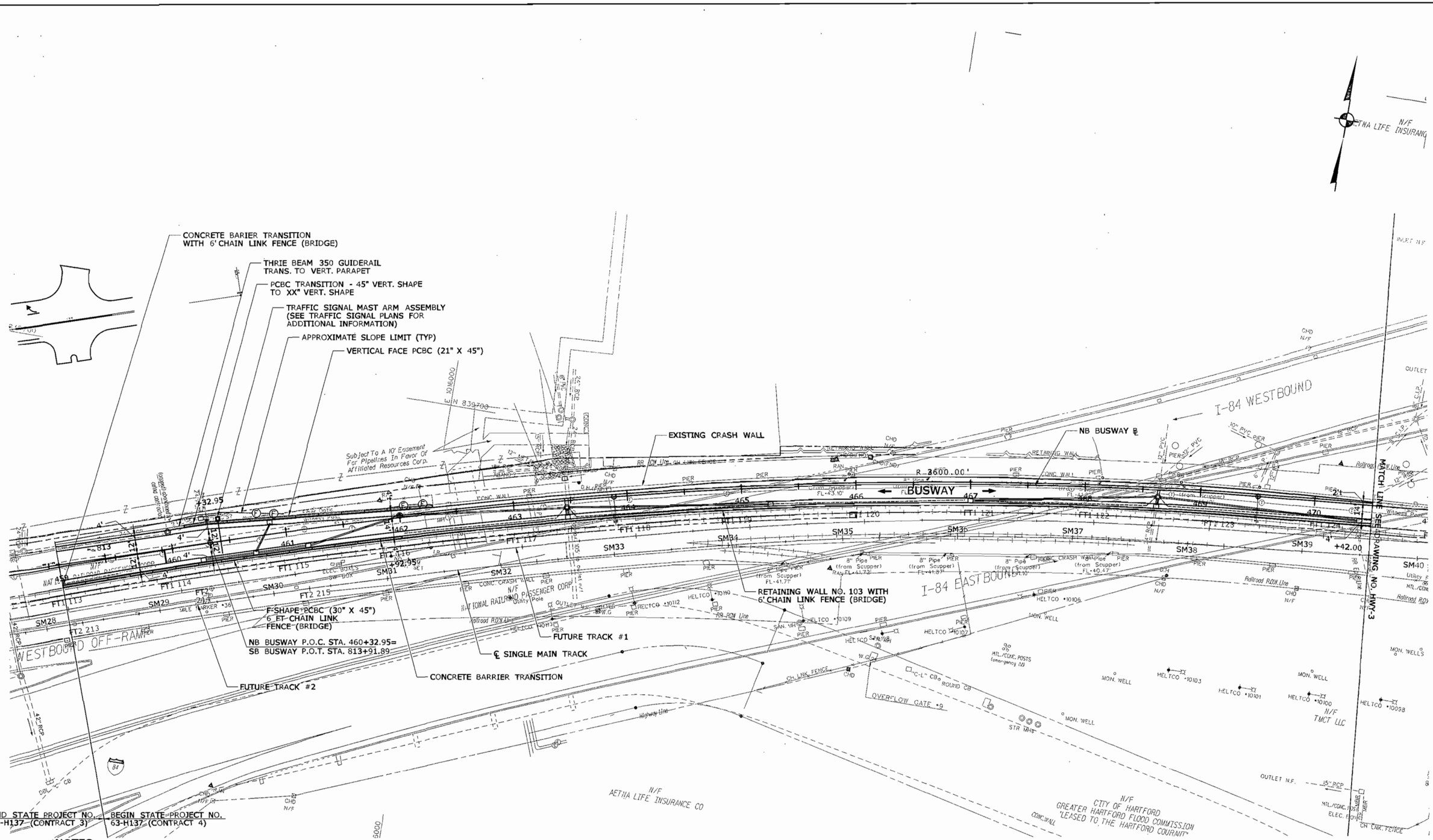

END STATE PROJECT NO. 63-H137 (CONTRACT 3)

BEGIN STATE PROJECT NO. 63-H137 (CONTRACT 4)

NOTES:

1. SINGLE MAIN TRACK SHALL BE ACTIVE TRACK DURING PROJECT 63-H137

REV.	DATE	REVISION DESCRIPTION	SHEET NO.
-	-	-	-
-	-	-	-
-	-	-	-
-	-	-	-
-	-	-	-
-	-	-	-

Plotted: 7/30/2010

DESIGNER/DRAFTER:

CHECKED BY:

SCALE IN FEET 0 40 80

SCALE 1"=40'

STATE OF CONNECTICUT
DEPARTMENT OF TRANSPORTATION

Filename: ...\27_HW_MSH_063_H137-4_PLN-003.dgn

SIGNATURE/BLOCK: LOCHNER
H.W. LOCHNER, INC
2110 Silas Deane Highway
Rocky Hill, CT 06067

APPROVED BY: DATE:

PROJECT TITLE: NEW BRITAIN - HARTFORD BUSWAY HARTFORD NORTH (SECTION B)

TOWN: HARTFORD

DRAWING TITLE: ROADWAY PLAN

PROJECT NO. 63-H137

DRAWING NO. HWY-03

SHEET NO. 27

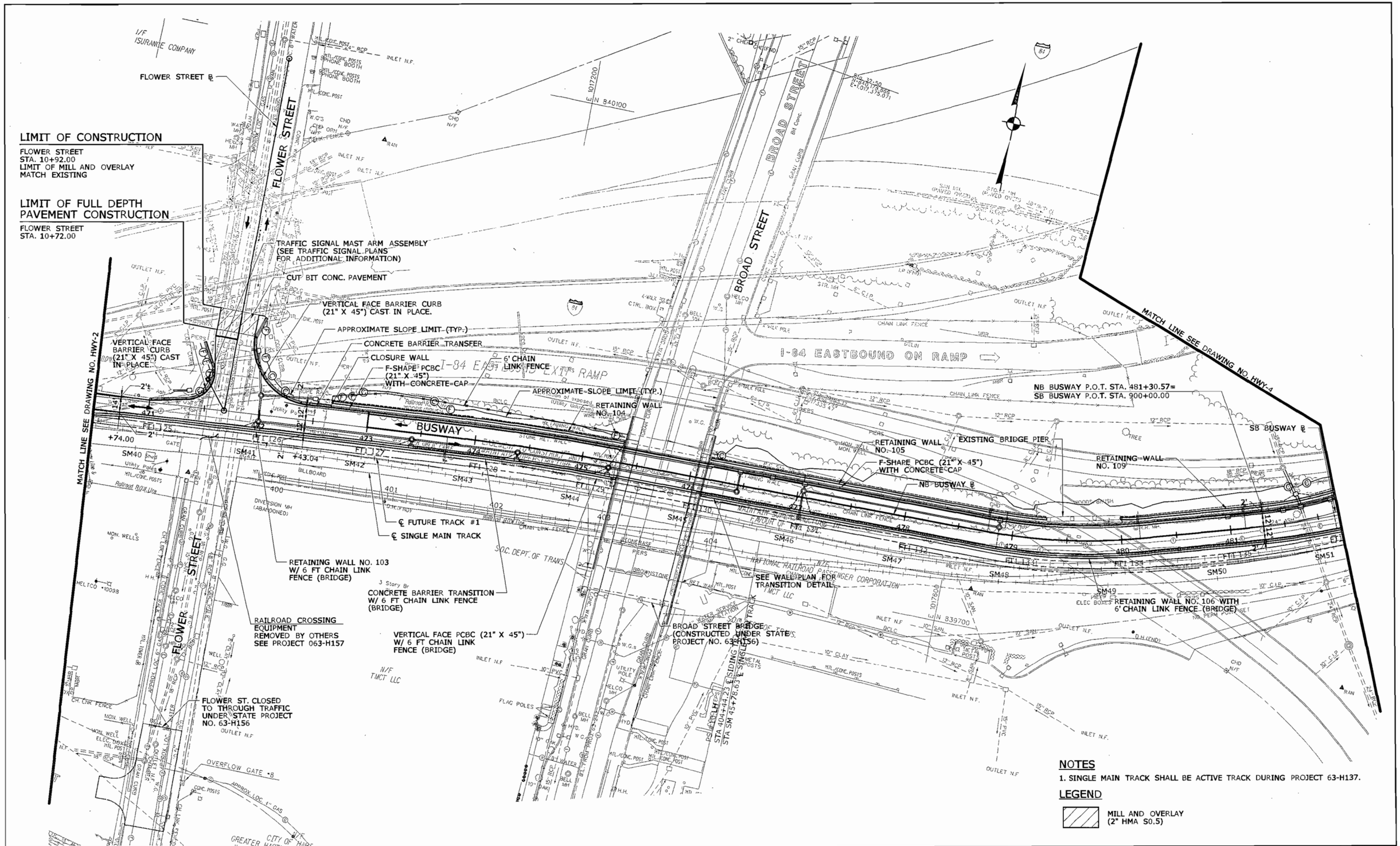

NOTES

1. SINGLE MAIN TRACK SHALL BE ACTIVE TRACK DURING PROJECT 63-H137.

LEGEND

MILL AND OVERLAY (2" HMA S0.5)

REV.	DATE	REVISION DESCRIPTION	SHEET NO.

Plotted: 7/30/2010

DESIGNER/DRAFTER:

CHECKED BY:

SCALE IN FEET 0 40 80

SCALE 1"=40'

STATE OF CONNECTICUT
DEPARTMENT OF TRANSPORTATION

Filename: ...\28_HW_MSH_063_H137-4_PLN-004.dgn

SIGNATURE/BLOCK:

LOCHNER
H.W. LOCHNER, INC
2110 Silas Deane Highway
Rocky Hill, CT 06067

APPROVED BY: DATE:

PROJECT TITLE:
NEW BRITAIN - HARTFORD BUSWAY HARTFORD NORTH (SECTION B)

TOWN: HARTFORD

DRAWING TITLE: ROADWAY PLAN

PROJECT NO. 63-H137

DRAWING NO. HWY-04

SHEET NO. 28

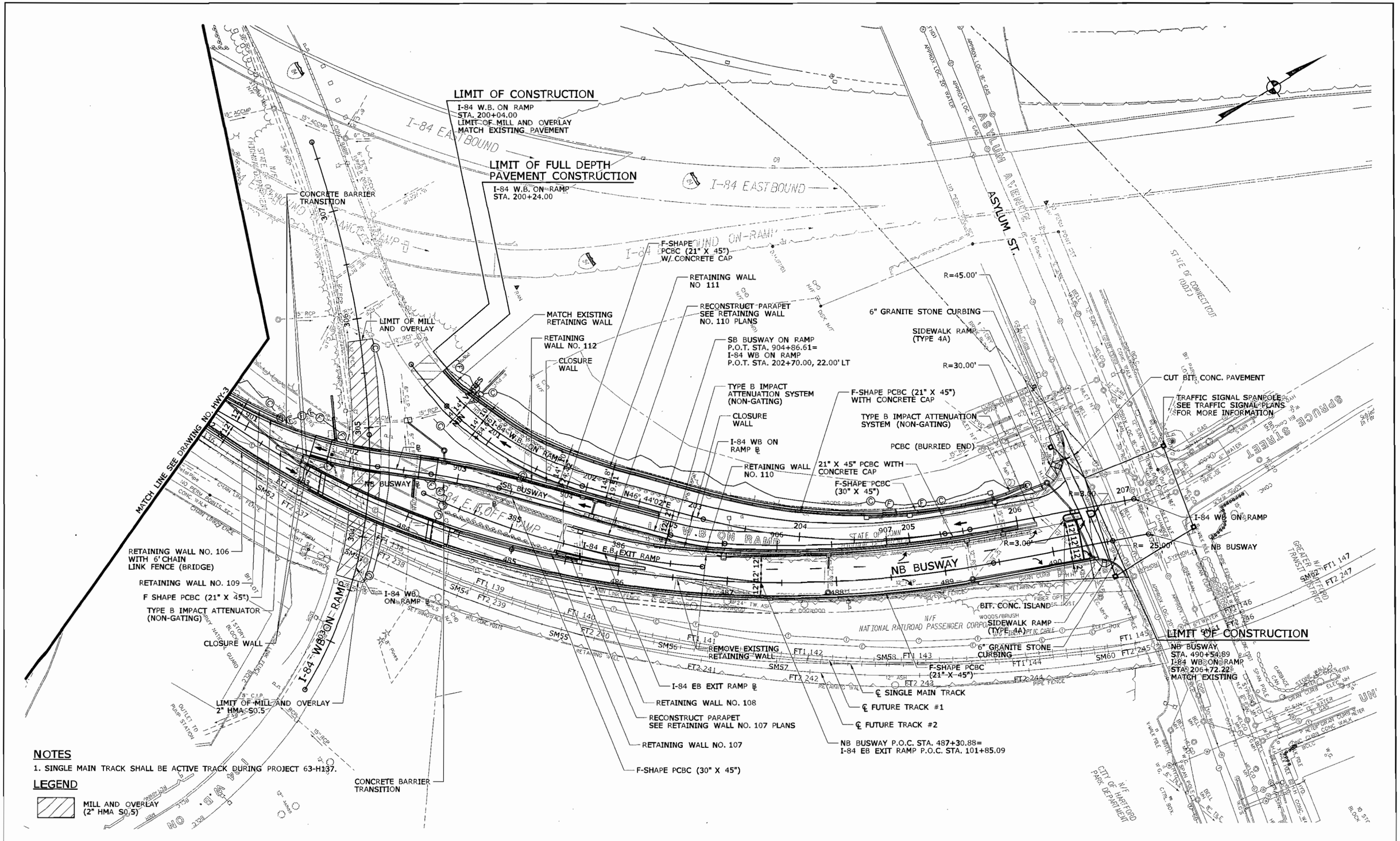

NOTES

1. SINGLE MAIN TRACK SHALL BE ACTIVE TRACK DURING PROJECT 63-H137.

LEGEND

MILL AND OVERLAY (2" HMA S0.5)

REV.	DATE	REVISION DESCRIPTION	SHEET NO.

Plotted: 7/30/2010

DESIGNER/DRAFTER:

CHECKED BY:

SCALE IN FEET 0 40 80

SCALE 1"=40'

STATE OF CONNECTICUT
DEPARTMENT OF TRANSPORTATION

Filename: ...\29_HW_MSH_063_H137-4_PLN-005.dgn

SIGNATURE/BLOCK: LOCHNER
H.W. LOCHNER, INC.
2110 Silas Deane Highway
Rocky Hill, CT 06067

APPROVED BY: DATE:

PROJECT TITLE: NEW BRITAIN - HARTFORD BUSWAY HARTFORD NORTH (SECTION B)

TOWN: HARTFORD

DRAWING TITLE: ROADWAY PLAN

PROJECT NO. 63-H137

DRAWING NO. HWY-05

SHEET NO. 29

END STATE PROJECT NO. 155-H025 | BEGIN STATE PROJECT NO. 63-H137

NB BUSWAY PVC STA. 450+00.00=
EL=56.34
SB BUSWAY PVC STA. 803+56.83, 12.03 LT
EL=56.67

NB BUSWAY STA. 454+00.28, ℄ SIGOURNEY STREET

NB BUSWAY STA 454+00, 16.00 RT
TYPE RPW CB

NB BUSWAY STA.450+44.59, 6.00 RT
STORM MH OVER 10 FT DEEP

NB BUSWAY STA.450+44.65, 16.00 RT
TYPE RPW CB

NB BUSWAY STA 453+96.90, 12.47 LT
RESET MANHOLE

NB BUSWAY STA 453+87.07, 17.59 LT
RESET SANITARY MH

NB BUSWAY STA 453+09.60, 16.00 RT
TYPE RPW CB

NB BUSWAY STA. 453+09.60, 6.00 RT
STORM MH OVER 10 FT DEEP

EXISTING SIGOURNEY STREET STRUCTURE

NB BUSWAY
STA 455+40.96, 20.91 LT
RESET MANHOLE
"TF" NOT YET AVAILABLE

NB BUSWAY
STA 455+56.08, 16.00 RT
TYPE RPW CB

NB BUSWAY STA 456+50.00, 6.00 RT
STORM MH OVER 10 FT DEEP

NB BUSWAY STA 456+50.00, 16.00 RT
TYPE RPW CB

NB BUSWAY STA 456+51.83, 12.04 LT
TYPE CM CB

NB BUSWAY STA 458+72.38, 18.27 LT
RESET MANHOLE

NB BUSWAY STA 458+49.30, 6.00 RT
STORM MH 5 FT DIA.
OVER 10 FT DEEP

NB BUSWAY STA 458+48.74,
14.02 LT RESET MANHOLE

NB BUSWAY STA 458+00.00, 16.00 RT
TYPE RPW CB

H.P.

PVT STA. 451+00.00
EL. 58.24

STA. 451+35.62
EL. 57.63

M.V.C. = 17' 7.5"

APPROX. PROPOSED GRADE
STATE PROJECT
155-H025

1.90%

-0.90%

PROPOSED
GRADE

-0.90%

PVT STA. 452+00.00
EL. 57.34

EXISTING GROUND ALONG ℄

18" RCP INSTALLED
UNDER 155-H025

12" RCP

12" RCP

18" RCP

24" RCP

30" RCP

12" RCP

LVC = 200.00 FT
K = 72
SD = 486 FT

12" WATERMAIN
JACKETED IN 24" RCP

24" RCP

24" RCP

24" RCP

24" RCP

24" RCP

12" SUBBASE

10" SUBBASE

LVC = 150.00 FT
K = 107

PVC STA. 459+75.00
EL. 50.36

MATCH LINE SEE DRAWING NO. PRO-02

100 95 90 85 80 75 70 65 60 55 50 45 40 35 30

450 451 452 453 454 455 456 457 458 459 460

REV.	DATE	REVISION DESCRIPTION	SHEET NO.

Plotted: 7/30/2010

DESIGNER/DRAFTER: D. MULLANEY
CHECKED BY: R. BRAY
SCALE IN FEET 1"=40'
0 40 80
VERT EXAGGERATED BY 10

STATE OF CONNECTICUT
DEPARTMENT OF TRANSPORTATION

Filename: ...\30_HW_MST_063_H137_PRO-001.dgn

SIGNATURE/BLOCK: LOCHNER
H.W. LOCHNER, INC
2110 Silas Deane Highway
Rocky Hill, CT 06067

APPROVED BY: DATE:

PROJECT TITLE:
NEW BRITAIN - HARTFORD
BUSWAY
HARTFORD NORTH

TOWN: HARTFORD

DRAWING TITLE: NB BUSWAY PROFILE

PROJECT NO. 63-H137
DRAWING NO. PRO-01
SHEET NO. 30

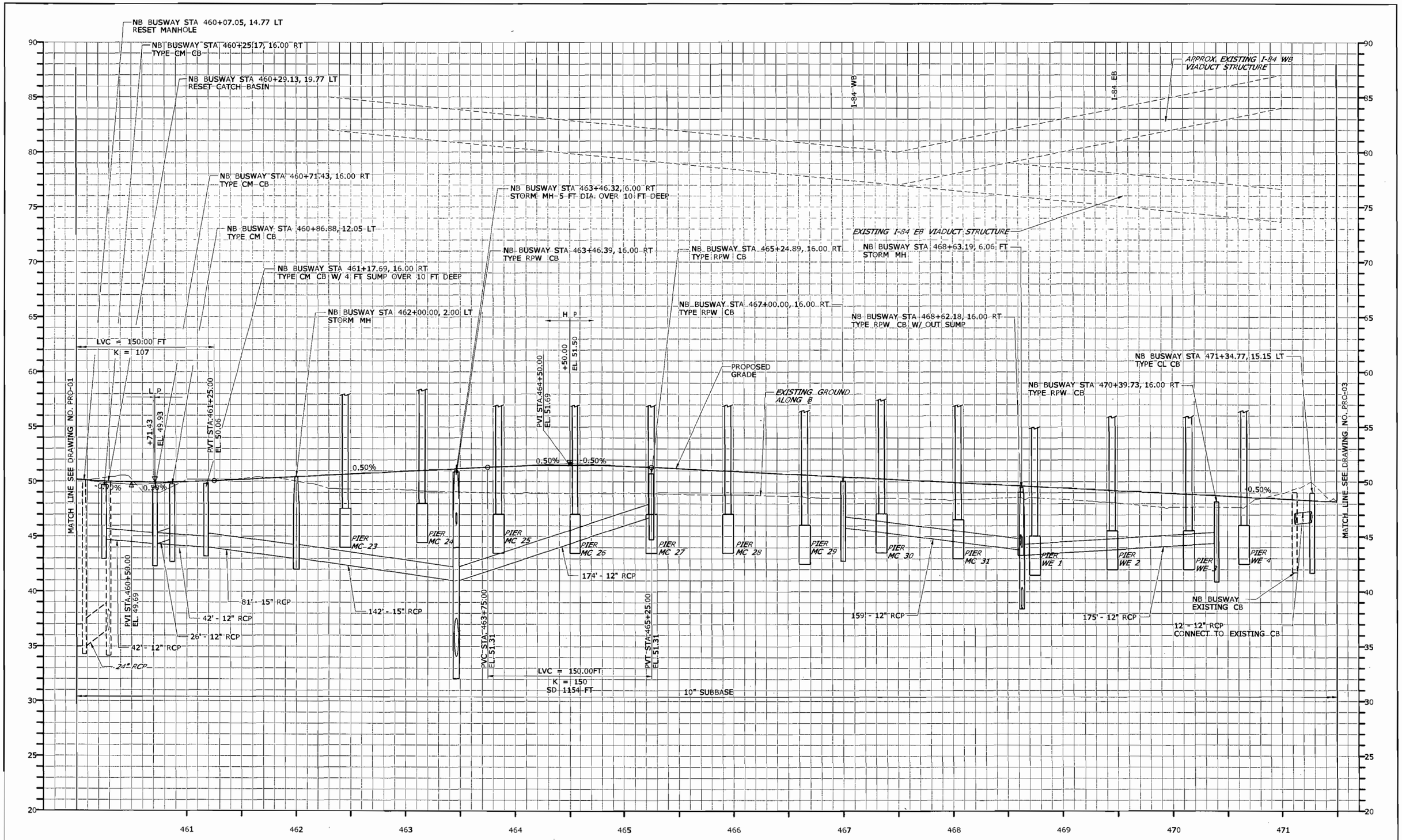

REV.	DATE	REVISION DESCRIPTION	SHEET NO.

Plotted: 7/30/2010

DESIGNER/DRAFTER: D. MULLANEY
CHECKED BY: R. BRAY
SCALE IN FEET 1"=40'
0 40 80
VERT EXAGGERATED BY 10

STATE OF CONNECTICUT
DEPARTMENT OF TRANSPORTATION

Filename: ...\31_HW_MST_063_H137_PRO-002.dgn

SIGNATURE/BLOCK: LOCHNER
H.W. LOCHNER, INC
2110 Silas Deane Highway
Rocky Hill, CT 06067

APPROVED BY: DATE:

PROJECT TITLE:
NEW BRITAIN - HARTFORD
BUSWAY
HARTFORD NORTH

TOWN: HARTFORD

DRAWING TITLE: NB BUSWAY PROFILE

PROJECT NO. 63-H137
DRAWING NO. PRO-02
SHEET NO. 31

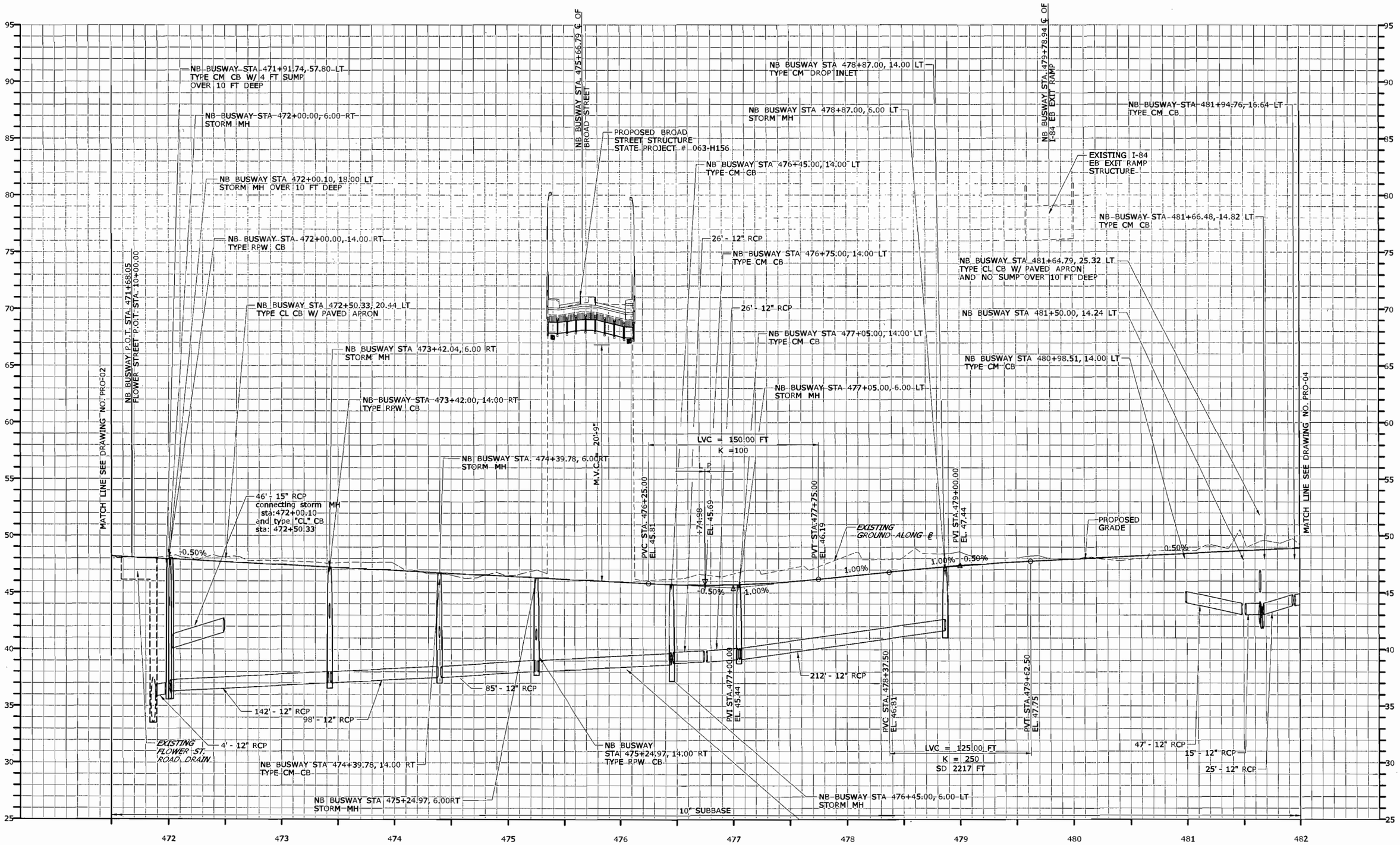

REV.	DATE	REVISION DESCRIPTION	SHEET NO.

Plotted: 7/30/2010

DESIGNER/DRAFTER: D. MULLANEY
CHECKED BY: R. BRAY
SCALE IN FEET 1"=40' (0 40 80)
VERT EXAGGERATED BY 10

STATE OF CONNECTICUT
DEPARTMENT OF TRANSPORTATION

Filename: ...\32_HW_MST_063_H137_PRO-003.dgn

SIGNATURE/BLOCK: LOCHNER
H.W. LOCHNER, INC
2110 Silas Deane Highway
Rocky Hill, CT 06067

APPROVED BY: DATE:

PROJECT TITLE: NEW BRITAIN - HARTFORD BUSWAY HARTFORD NORTH

TOWN: HARTFORD

DRAWING TITLE: NB BUSWAY PROFILE

PROJECT NO. 63-H137
DRAWING NO. PRO-03
SHEET NO. 32

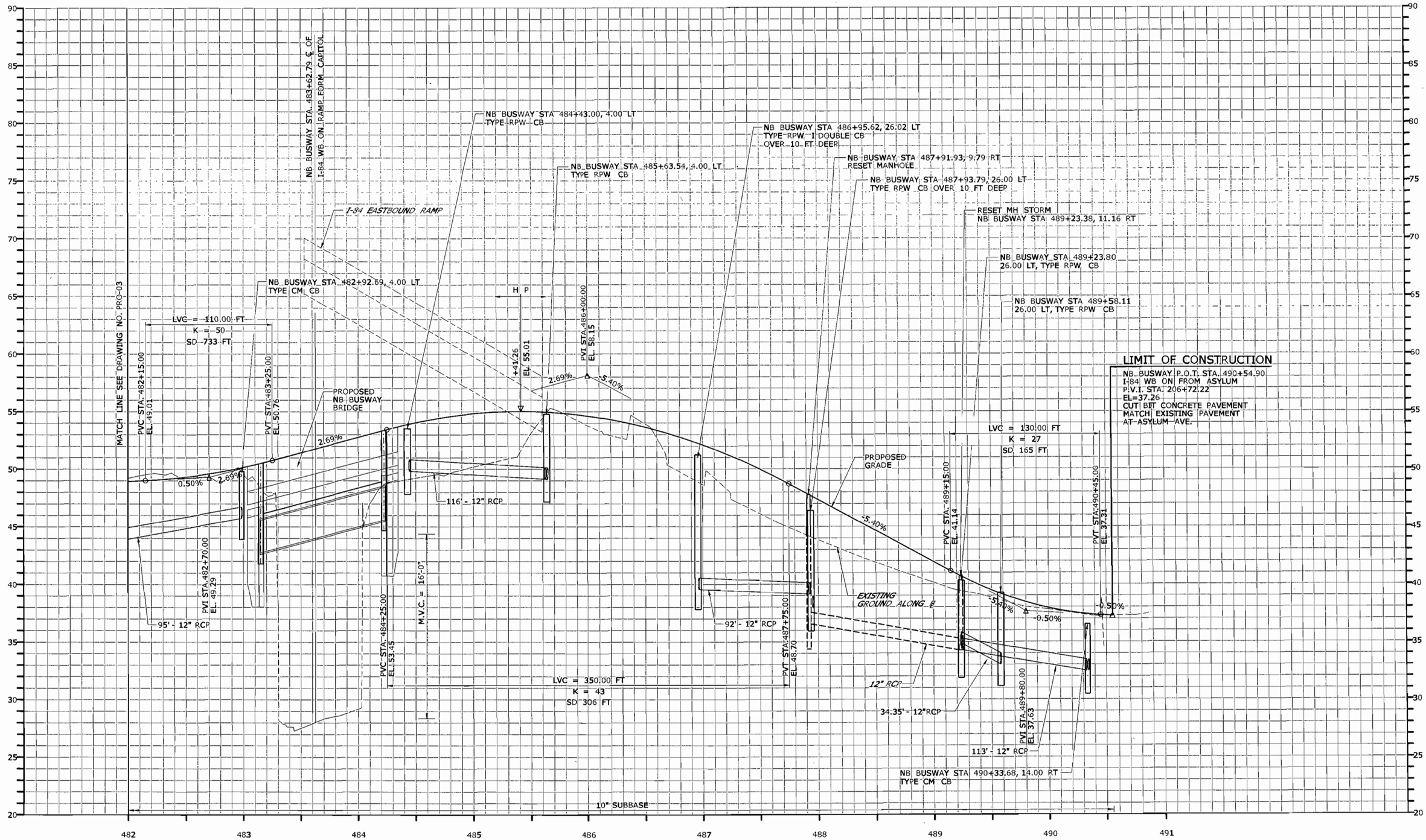

REV.	DATE	REVISION DESCRIPTION	SHEET NO.

Plotted: 7/30/2010

DESIGNER/DRAFTER: D. MULLANEY
CHECKED BY: R. BRAY
SCALE IN FEET 1"=40' (0 40 80)
VERT EXAGGERATED BY 10

STATE OF CONNECTICUT
DEPARTMENT OF TRANSPORTATION

Filename: ...\33_HW_MST_063_H137_PRO-004.dgn

SIGNATURE/BLOCK: LOCHNER
H.W. LOCHNER, INC
2110 Silas Deane Highway
Rocky Hill, CT 06067

APPROVED BY: DATE:

PROJECT TITLE: NEW BRITAIN - HARTFORD BUSWAY HARTFORD NORTH

TOWN: HARTFORD

DRAWING TITLE: NB BUSWAY PROFILE

PROJECT NO. 63-H137
DRAWING NO. PRO-04
SHEET NO. 33

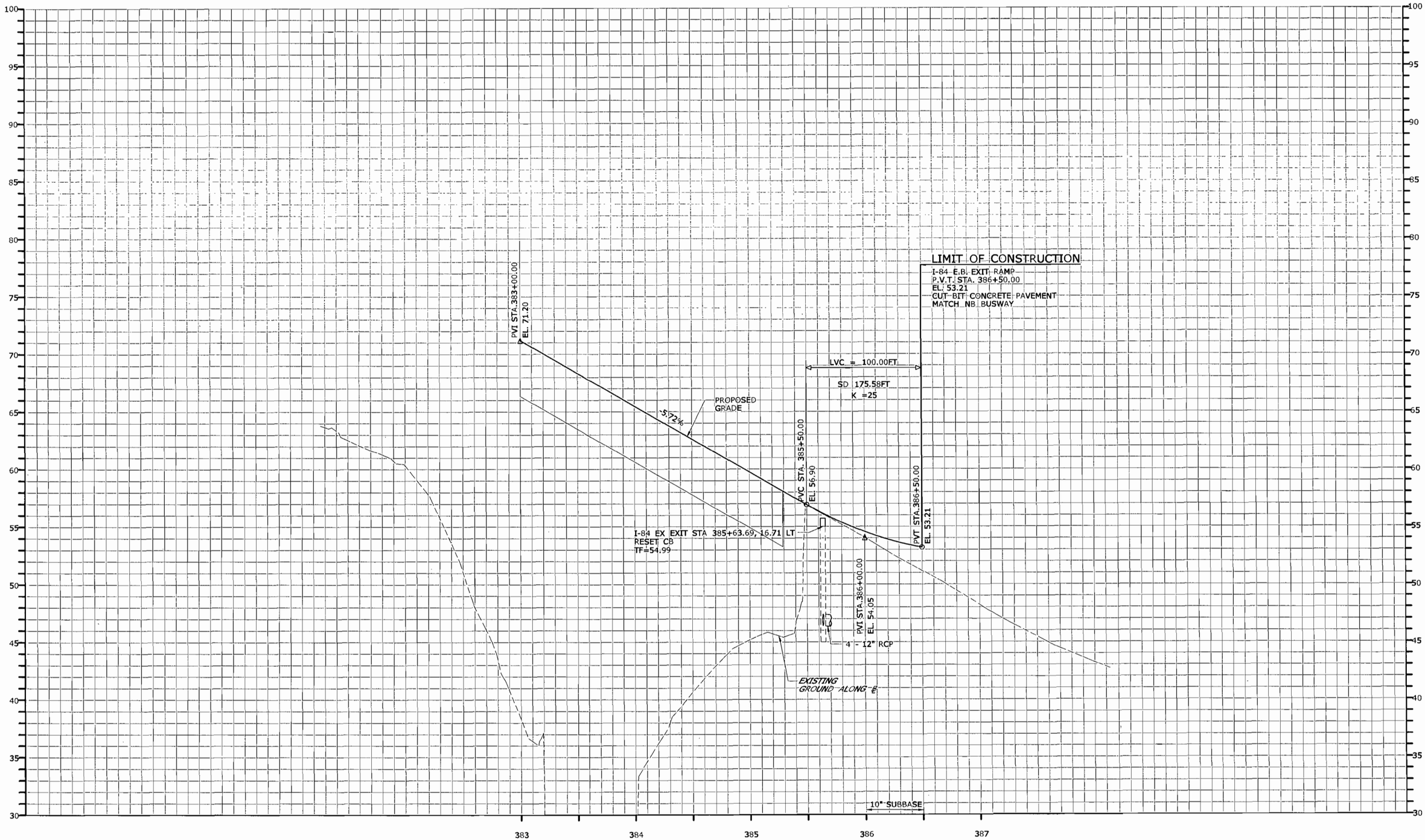

REV.	DATE	REVISION DESCRIPTION	SHEET NO.

Plotted: 7/30/2010

DESIGNER/DRAFTER: D. MULLANEY
CHECKED BY: R. BRAY
SCALE IN FEET 1"=40'
0 40 80
VERT EXAGGERATED BY 10

STATE OF CONNECTICUT
DEPARTMENT OF TRANSPORTATION

Filename: ...\34_HW_MST_063_H137_PRO-005.dgn

SIGNATURE/BLOCK: LOCHNER
H.W. LOCHNER, INC
2110 Silas Deane Highway
Rocky Hill, CT 06067

APPROVED BY: DATE:

PROJECT TITLE: NEW BRITAIN - HARTFORD BUSWAY HARTFORD NORTH

TOWN: HARTFORD

DRAWING TITLE: I-84 EB EXIT RAMP PROFILE

PROJECT NO. 63-H137
DRAWING NO. PRO-05
SHEET NO. 34

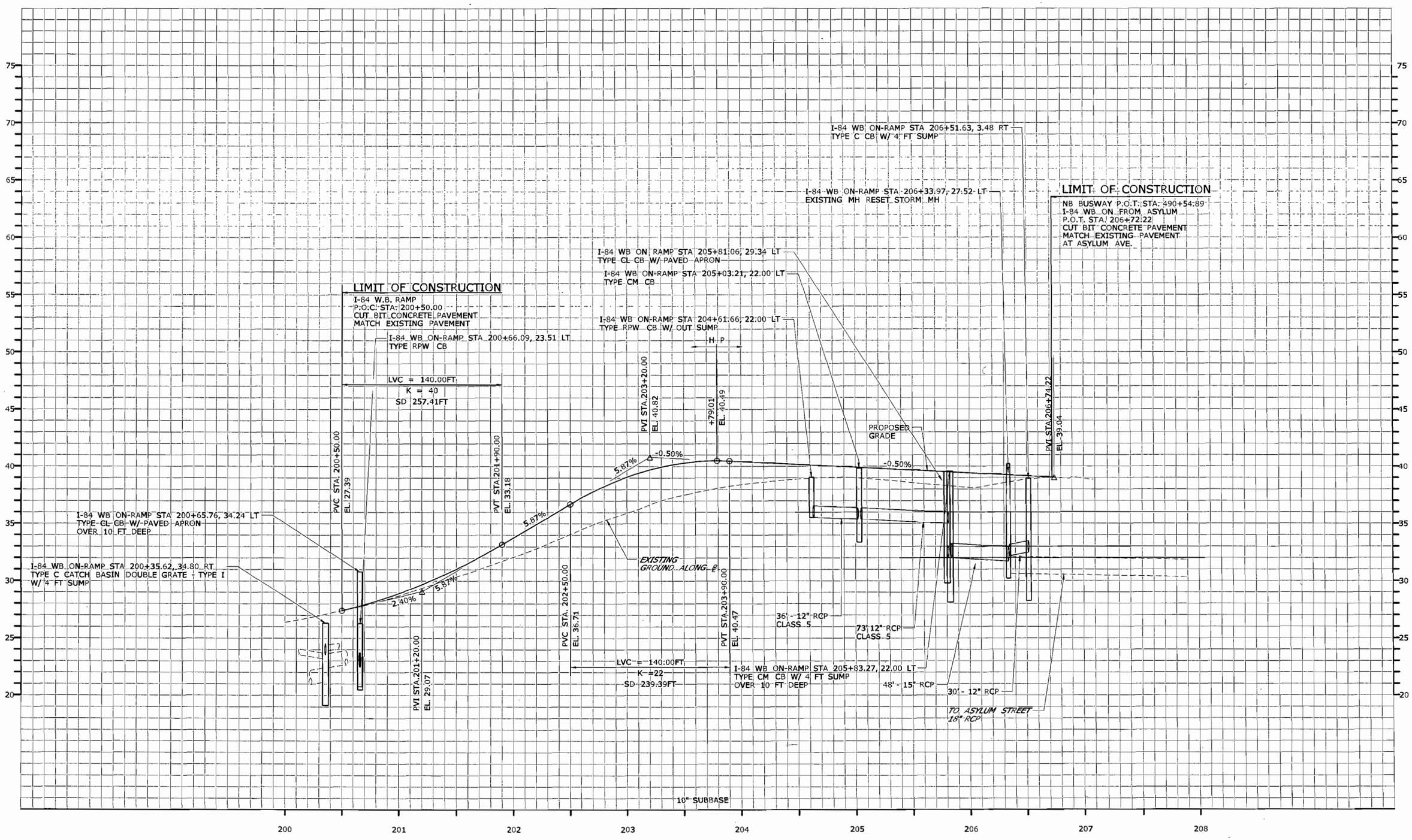

REV.	DATE	REVISION DESCRIPTION	SHEET NO.
-	-	-	-
-	-	-	-
-	-	-	-
-	-	-	-
-	-	-	-
-	-	-	-

Plotted: 7/30/2010

DESIGNER/DRAFTER: D. MULLANEY

CHECKED BY: R. BRAY

SCALE IN FEET 1"=40'
0 40 80
VERT EXAGGERATED BY 10

STATE OF CONNECTICUT
DEPARTMENT OF TRANSPORTATION

Filename: ...\35_HW_MST_063_H137_PRO-006.dgn

SIGNATURE/BLOCK:
LOCHNER
H.W. LOCHNER, INC
2110 Silas Deane Highway
Rocky Hill, CT 06067

PROJECT TITLE:
NEW BRITAIN - HARTFORD BUSWAY
HARTFORD NORTH

TOWN: HARTFORD

DRAWING TITLE:
I-84 WB ON RAMP PROFILE

PROJECT NO. 63-H137

DRAWING NO. PRO-06

SHEET NO. 35

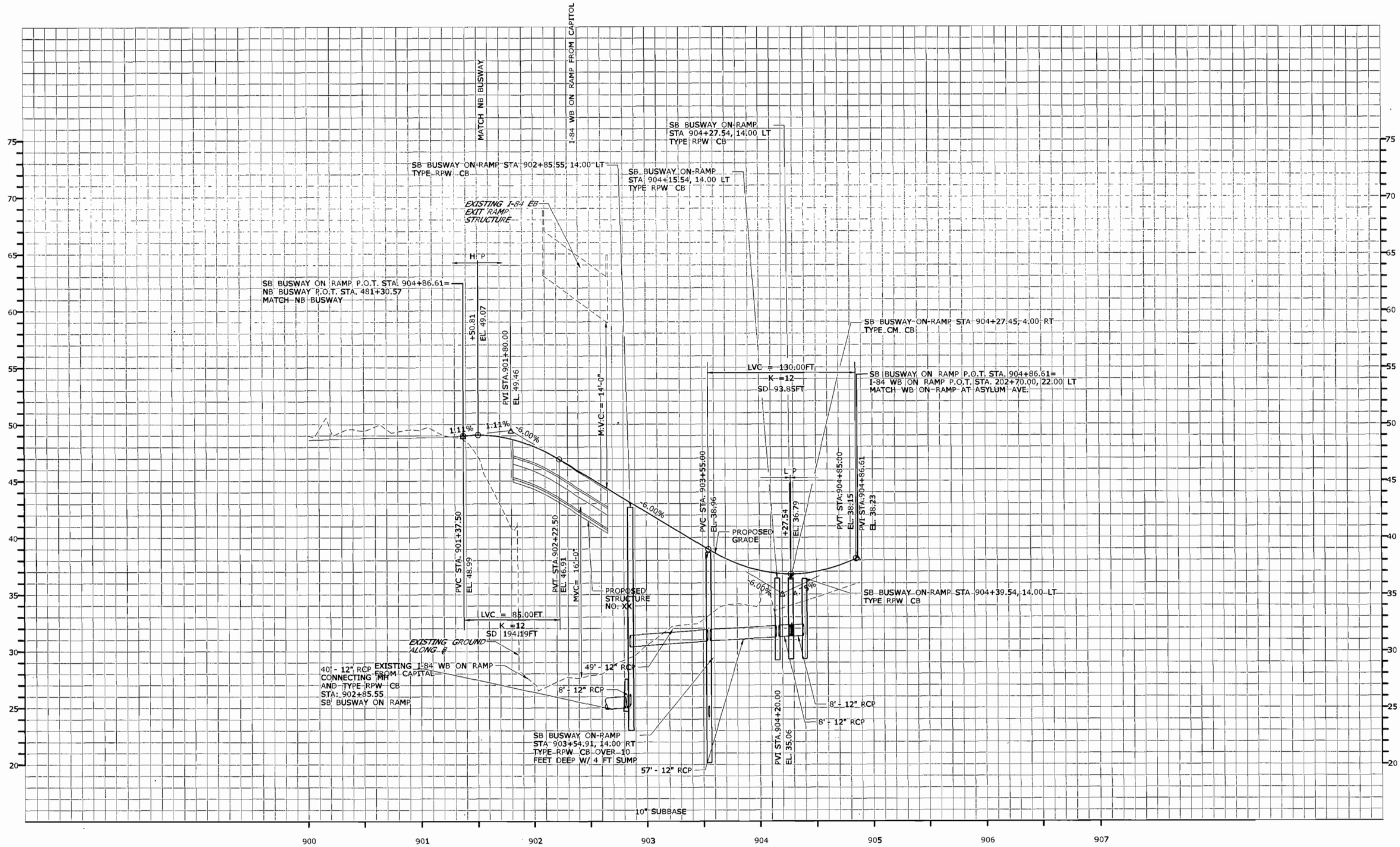

REV.	DATE	REVISION DESCRIPTION	SHEET NO.

Plotted: 7/30/2010

DESIGNER/DRAFTER:

CHECKED BY:

SCALE IN FEET 1"=40'
0 40 80
VERT EXAGGERATED BY 10

STATE OF CONNECTICUT
DEPARTMENT OF TRANSPORTATION

Filename: ...\36_HW_MST_063_H137_PRO-007.dgn

SIGNATURE/BLOCK:
LOCHNER
H.W. LOCHNER, INC
2110 Silas Deane Highway
Rocky Hill, CT 06067

APPROVED BY: DATE:

PROJECT TITLE:
NEW BRITAIN - HARTFORD
BUSWAY
HARTFORD NORTH

TOWN: HARTFORD

DRAWING TITLE: SB BUSWAY ON RAMP PROFILE

PROJECT NO. 63-H137

DRAWING NO. PRO-07

SHEET NO. 36

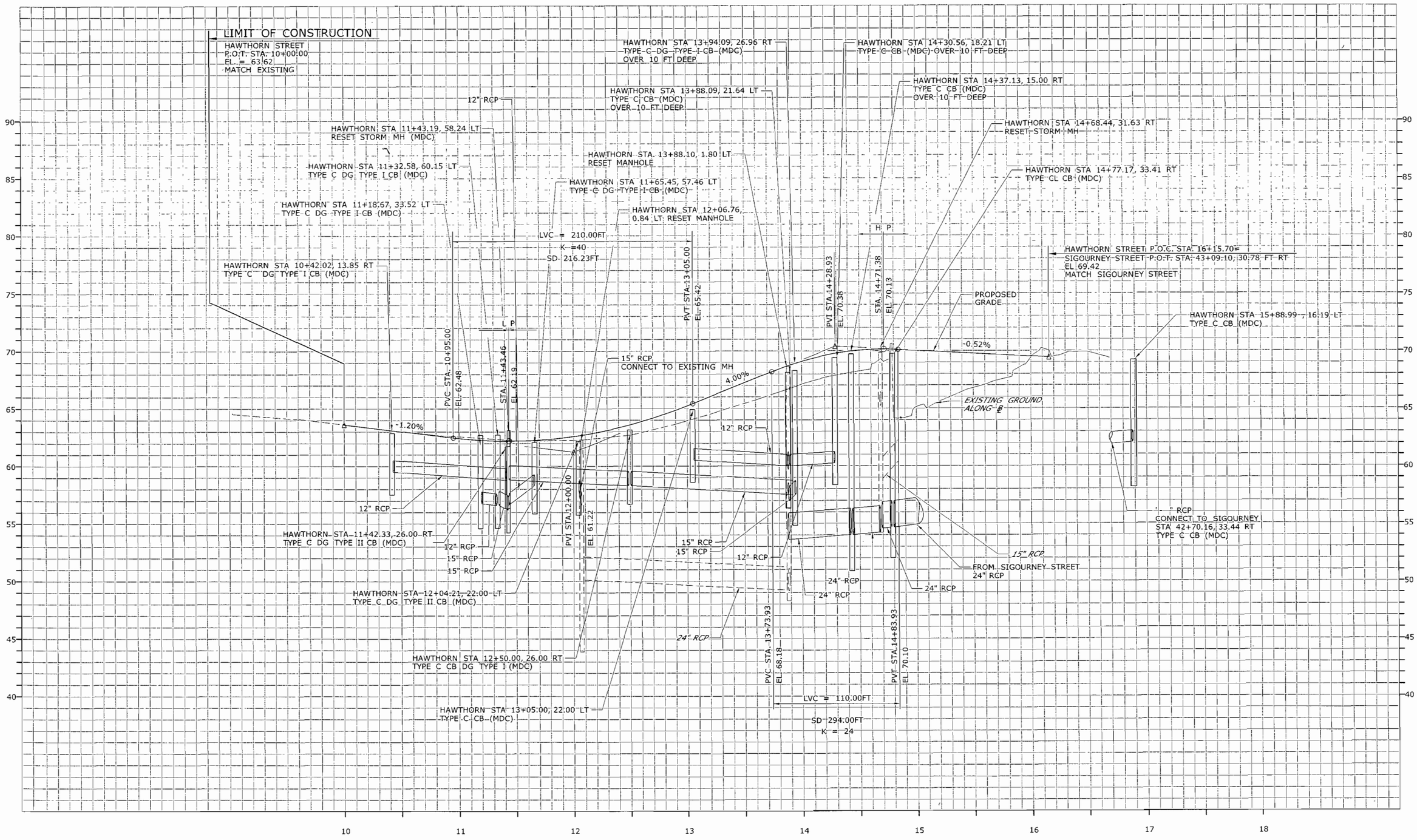

REV.	DATE	REVISION DESCRIPTION	SHEET NO.	Plotted: 7/30/2010

DESIGNER/DRAFTER:

CHECKED BY:

SCALE IN FEET 1"=40'
0 40 80
VERT EXAGGERATED BY 10

STATE OF CONNECTICUT
DEPARTMENT OF TRANSPORTATION

Filename: ...\37_HW_MST_063_H137-3_PRO-008.dgn

SIGNATURE/BLOCK: LOCHNER
H.W. LOCHNER, INC
2110 Silas Deane Highway
Rocky Hill, CT 06067

APPROVED BY: DATE:

PROJECT TITLE:
NEW BRITAIN - HARTFORD
BUSWAY HARTFORD NORTH
(SECTION A)

TOWN: HARTFORD

DRAWING TITLE: HAWTHORN STREET PROFILE

PROJECT NO. 63-H137

DRAWING NO. PRO-08

SHEET NO. 37

DRAINAGE NOTES:

1. FOR SEDIMENTATION CONTROL AROUND CATCH BASINS, SEE MISC. DETAILS.
2. TURF ESTABLISHMENT SHALL BE PERFORMED ON ALL DISTURBED AREAS.
3. ALL EXISTING CATCH BASINS AND MANHOLES TO BE RETAINED SHALL BE CLEANED.

DRAINAGE LEGEND

- (A) REMOVE DRAINAGE STRUCTURE
- (B) PLUG PIPE
- (C) REMOVE PIPE
- (D) FILL AND ABANDON DRAINAGE STRUCTURE
- (E) FILL AND ABANDON PIPE
- (F) CONNECT TO EXISTING DRAINAGE STRUCTURE
- (G) CLEAN PIPE
- (H) RESET CB
- (I) RESET MH
- (J) REBUILD DRAINAGE STRUCTURE
- (K) CONVERT CB TO (TYPE) CB
- (L) CONVERT CB TO MH
- (M) CONVERT MH TO CB (TYPE)
- (N) RESET CB WITH NEW FRAME AND GRATE (TYPE)
- (O) MATCH EXISTING INVERT
- (P) STRUCTURE UNDERDRAIN SEE STRUCTURE PLANS
- (Q) PROVIDE OUTLET FOR STRUCTURE UNDERDRAIN AT THIS LOCATION
- (R) RESET SANITARY MH
- (S) CLEAN DRAINAGE STRUCTURE
- (T) NEW MH TOP
- (U) NEW CB TOP

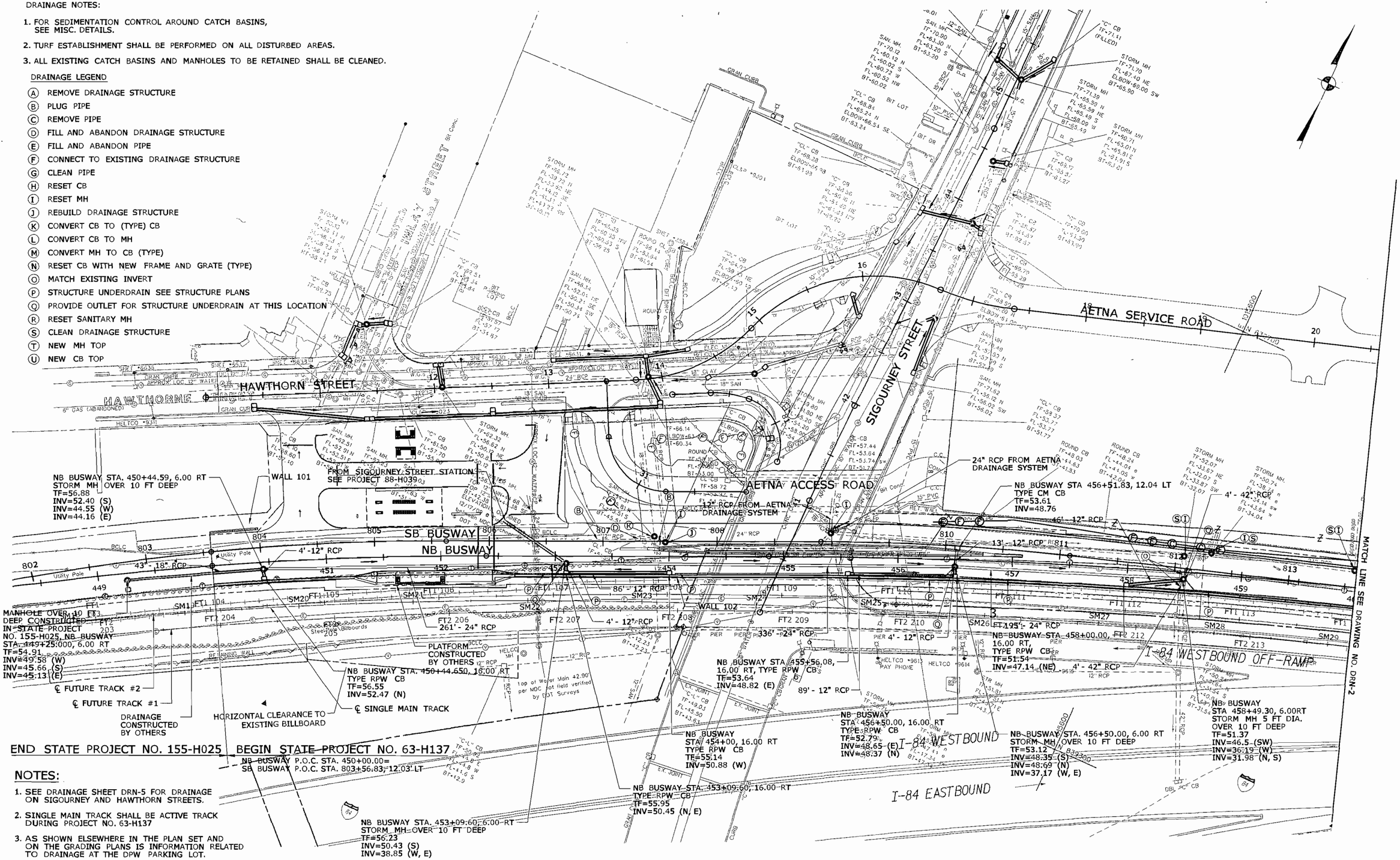

NOTES:

1. SEE DRAINAGE SHEET DRN-5 FOR DRAINAGE ON SIGOURNEY AND HAWTHORN STREETS.
2. SINGLE MAIN TRACK SHALL BE ACTIVE TRACK DURING PROJECT NO. 63-H137
3. AS SHOWN ELSEWHERE IN THE PLAN SET AND ON THE GRADING PLANS IS INFORMATION RELATED TO DRAINAGE AT THE DPW PARKING LOT.

REV.	DATE	REVISION DESCRIPTION	SHEET NO.

Plotted: 6/7/2010

DESIGNER/DRAFTER: D. MULLANEY
CHECKED BY: R. BRAY
SCALE IN FEET: 0 40 80
SCALE 1"=40'

STATE OF CONNECTICUT
DEPARTMENT OF TRANSPORTATION

Filename: ...\HW_MSH_063_H137_DRN-001.dgn

SIGNATURE/BLOCK: LOCHNER
H.W. LOCHNER, INC
2110 Silas Deane Highway
Rocky Hill, CT 06067

APPROVED BY: DATE:

PROJECT TITLE: NEW BRITAIN - HARTFORD BUSWAY HARTFORD NORTH

TOWN: HARTFORD

DRAWING TITLE: DRAINAGE PLAN

PROJECT NO. 63-H137
DRAWING NO. DRN-1
SHEET NO. 38

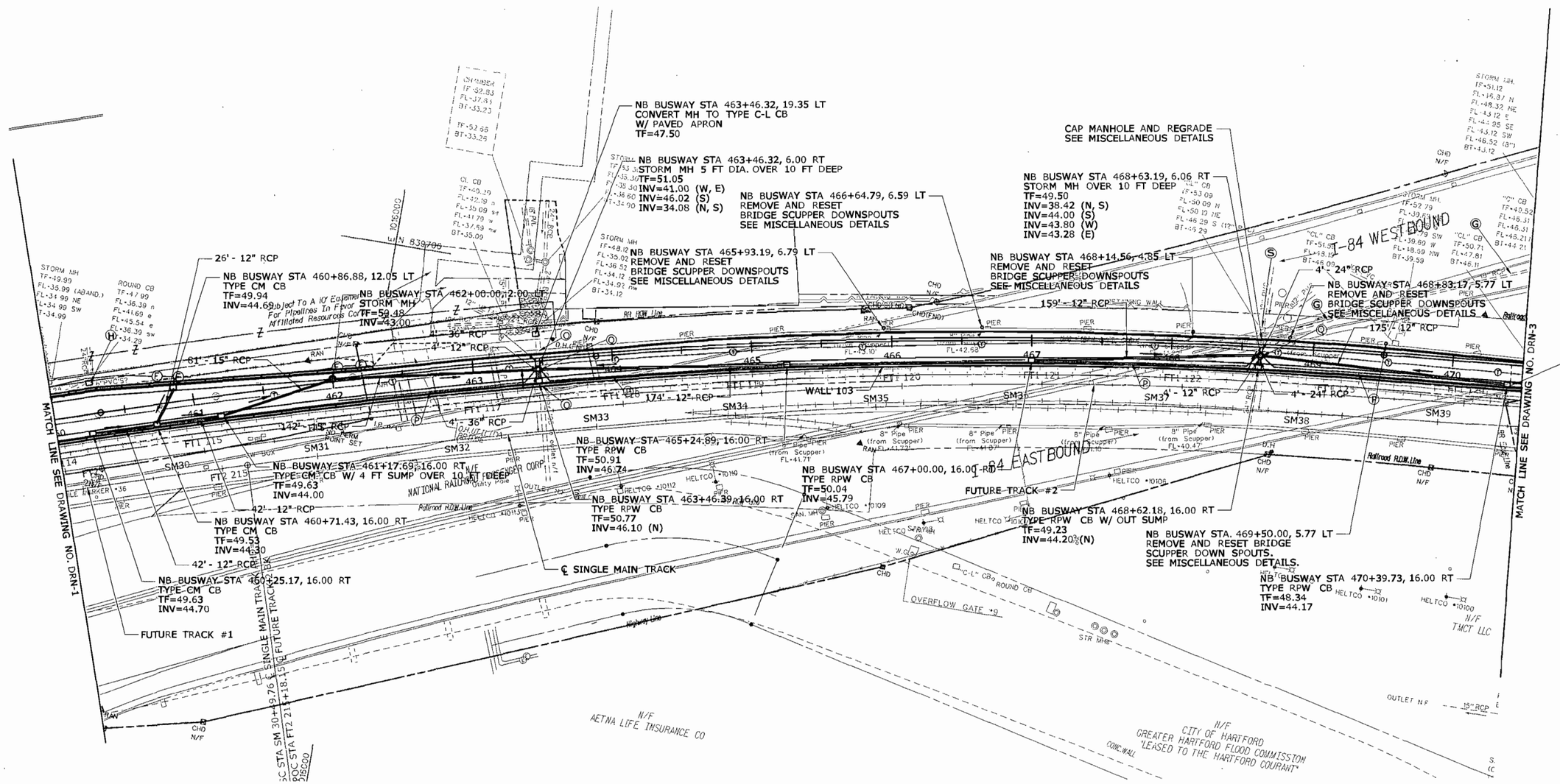

NOTES:

1. SINGLE MAIN TRACK SHALL BE ACTIVE TRACK DURING PROJECT NO. 63-H137

REV.	DATE	REVISION DESCRIPTION	SHEET NO.

Plotted: 6/7/2010

DESIGNER/DRAFTER: D. MULLANEY
CHECKED BY: R. BRAY
SCALE IN FEET 0 40 80
SCALE 1"=40'

STATE OF CONNECTICUT
DEPARTMENT OF TRANSPORTATION

Filename: ...\HW_MSH_063_H137_DRN-002.dgn

SIGNATURE/BLOCK: LOCHNER
H.W. LOCHNER, INC
2110 Silas Deane Highway
Rocky Hill, CT 06067

APPROVED BY: DATE:

PROJECT TITLE: NEW BRITAIN - HARTFORD BUSWAY HARTFORD NORTH

TOWN: HARTFORD

DRAWING TITLE: DRAINAGE PLAN

PROJECT NO. 63-H137
DRAWING NO. DRN-2
SHEET NO. 39

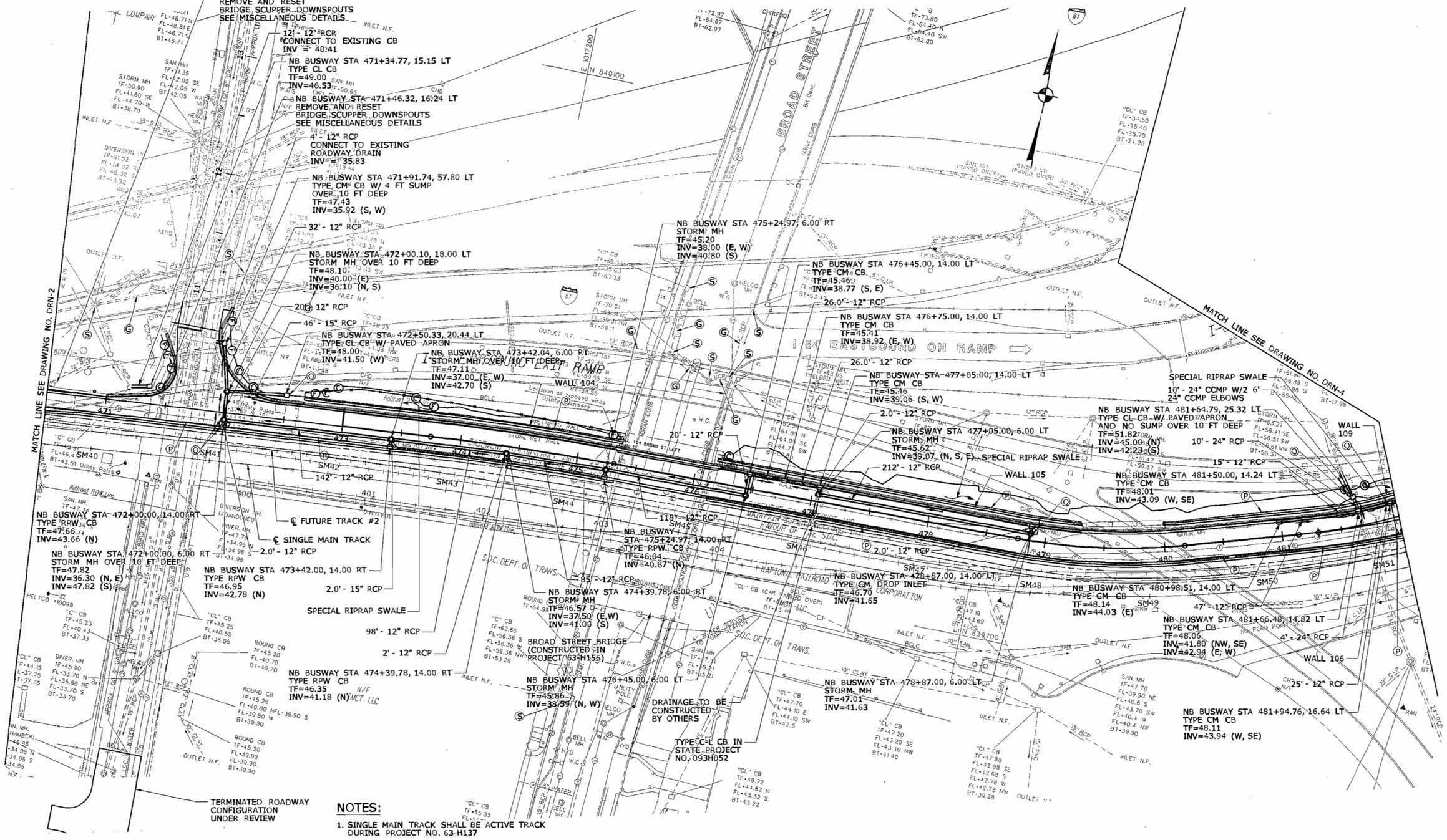

NOTES:

1. SINGLE MAIN TRACK SHALL BE ACTIVE TRACK DURING PROJECT NO. 63-H137

REV.	DATE	REVISION DESCRIPTION	SHEET NO.

Plotted: 6/7/2010

DESIGNER/DRAFTER: D. MULLANEY
CHECKED BY: R. BRAY
SCALE IN FEET 0 40 80
SCALE 1"=40'

STATE OF CONNECTICUT
DEPARTMENT OF TRANSPORTATION

Filename: ...\HW_MSH_063_H137_DRN-003.dgn

SIGNATURE/BLOCK: LOCHNER
H.W. LOCHNER, INC
2110 Silas Deane Highway
Rocky Hill, CT 06067
APPROVED BY: DATE:

PROJECT TITLE: NEW BRITAIN - HARTFORD BUSWAY HARTFORD NORTH

TOWN: HARTFORD

DRAWING TITLE: DRAINAGE PLAN

PROJECT NO. 63-H137
DRAWING NO. DRN-3
SHEET NO. 40

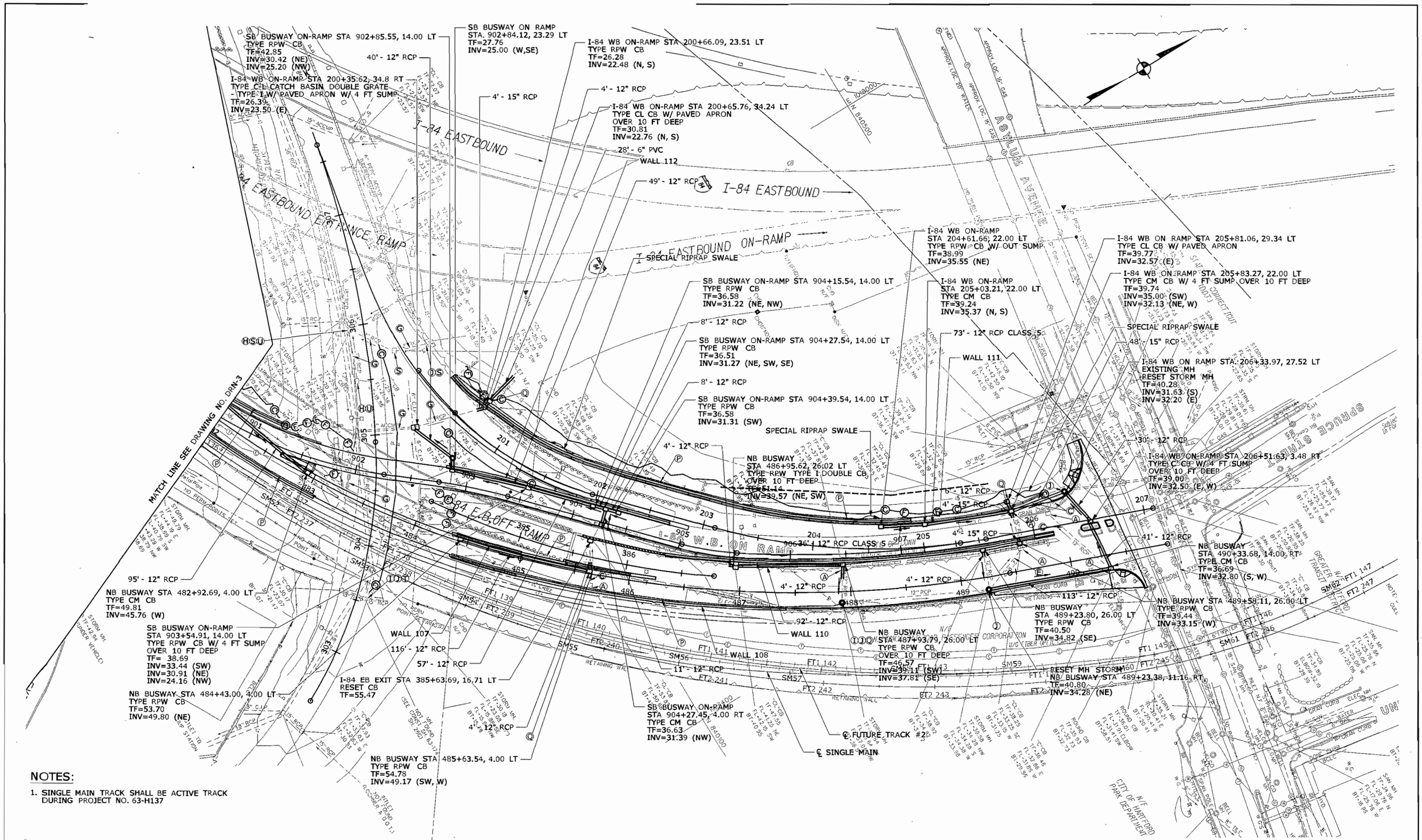

NOTES:

1. SINGLE MAIN TRACK SHALL BE ACTIVE TRACK DURING PROJECT NO. 63-H137

REV.	DATE	REVISION DESCRIPTION	SHEET NO.

Plotted: 6/7/2010

DESIGNER/DRAFTER: D. MULLANEY
CHECKED BY: R. BRAY
SCALE IN FEET 0 40 80
SCALE 1"=40'

STATE OF CONNECTICUT
DEPARTMENT OF TRANSPORTATION

Filename: ...\HW_MSH_063_H137_DRN-004.dgn

SIGNATURE/BLOCK: LOCHNER
H.W. LOCHNER, INC
2110 Silas Deane Highway
Rocky Hill, CT 06067
APPROVED BY: DATE:

PROJECT TITLE: NEW BRITAIN - HARTFORD BUSWAY HARTFORD NORTH

TOWN: HARTFORD

DRAWING TITLE: DRAINAGE PLAN

PROJECT NO. 63-H137
DRAWING NO. DRN-4
SHEET NO. 41

NOTE:

1. SEE DRAINAGE SHEETS 1-4 FOR DRAINAGE ON THE BUSWAY MAINLINE.

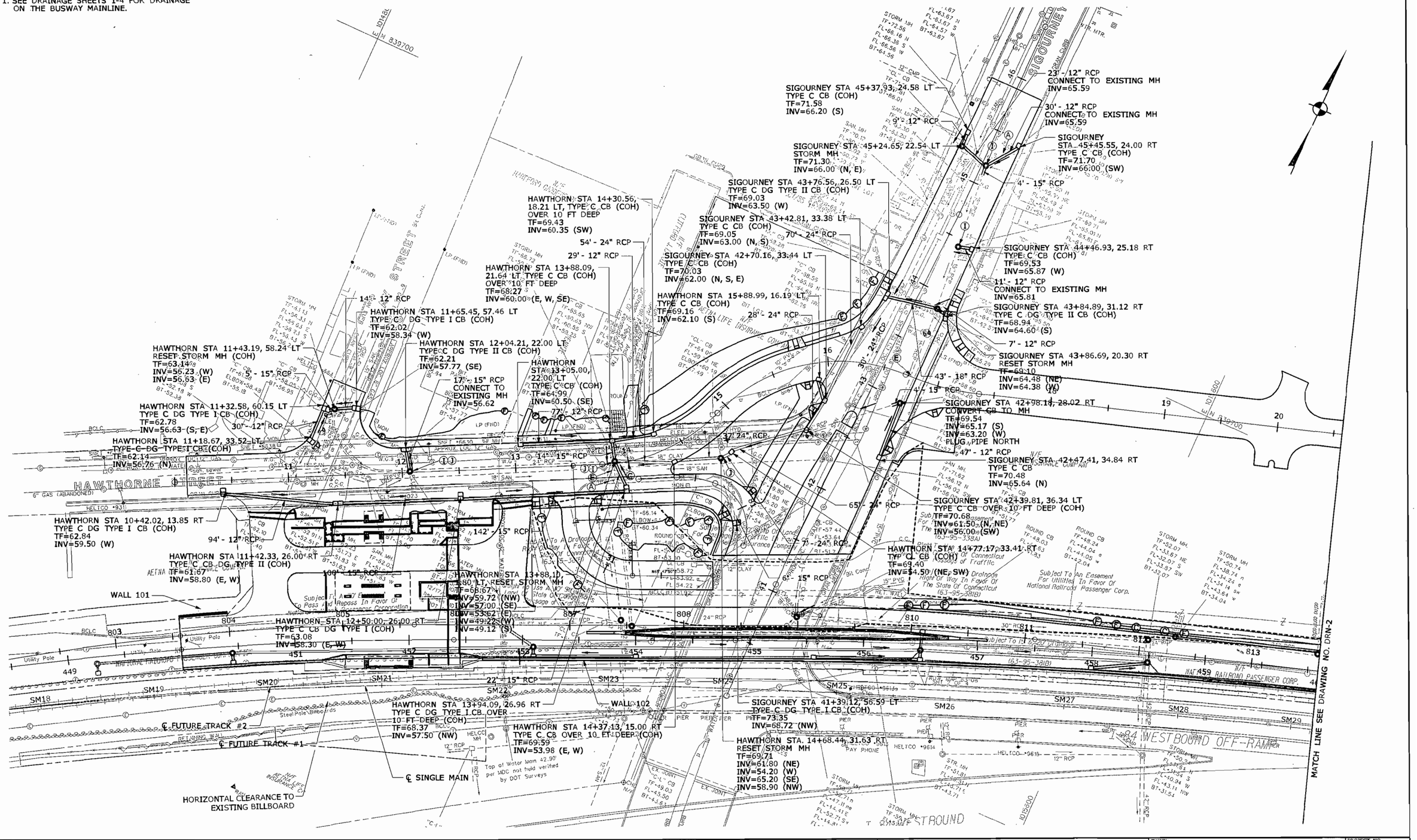

REV.	DATE	REVISION DESCRIPTION	SHEET NO.

Plotted: 6/7/2010

DESIGNER/DRAFTER: D. MULLANEY

CHECKED BY: R. BRAY

SCALE IN FEET 0 40 80

SCALE 1"=40'

STATE OF CONNECTICUT
DEPARTMENT OF TRANSPORTATION

Filename: ...\HW_MSH_063_H137_DRN-005.dgn

SIGNATURE/BLOCK: LOCHNER
H.W. LOCHNER, INC
2110 Silas Deane Highway
Rocky Hill, CT 06067

APPROVED BY: DATE:

PROJECT TITLE: NEW BRITAIN - HARTFORD BUSWAY HARTFORD NORTH

TOWN: HARTFORD

DRAWING TITLE: DRAINAGE PLAN

PROJECT NO. 63-H137

DRAWING NO. DRN-5

SHEET NO. 42

GENERAL NOTES:

1. THE CONTRACTOR SHALL MAINTAIN THE EARTHEN BERM AS DIRECTED BY THE ENGINEER.
2. WHEN USING A SEDIMENTATION CONTROL SYSTEM ALONG THE TOE OF SLOPE, ADD WINGS TO PREVENT SEDIMENT FROM MOVING ALONG THE FENCE AND OFF THE SITE. MINIMUM SPACING FOR WINGS IS 25' (7620).
3. CATCH BASIN ON SLOPE SHOULD NOT BE RINGED. THE SPACING OF SEDIMENTATION CONTROL SYSTEM SHALL VARY WITH SLOPE.
4. ELEVATION B = A + 12" (305) MIN.

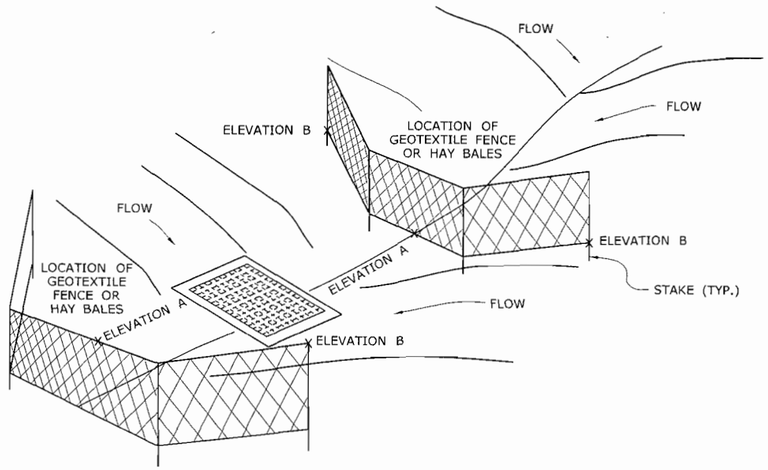

TREATMENT FOR A CATCH BASIN ON A SLOPE

(SEE NOTE 4)

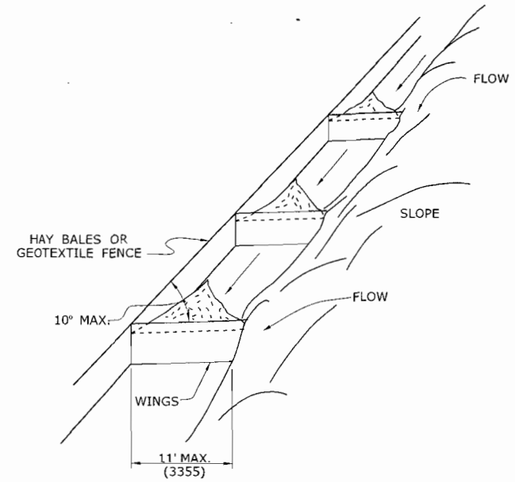

TREATMENT AT TOE OF SLOPE

(SEE NOTE 3)

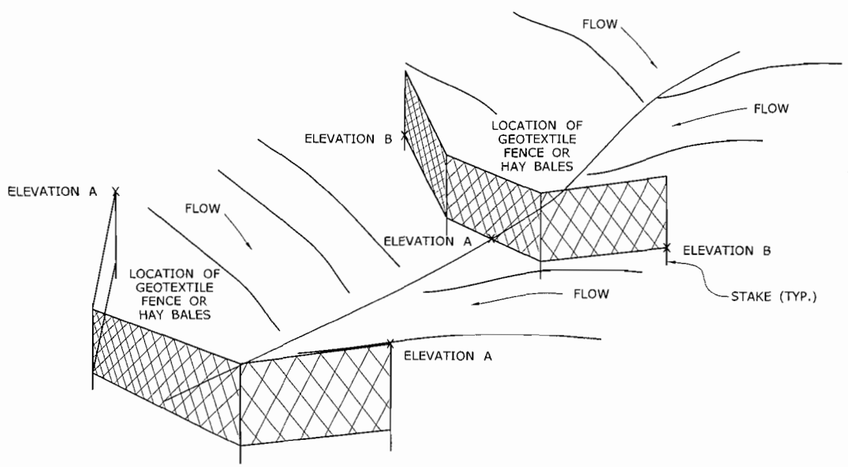

CHECK DAM

(SEE NOTE 4)

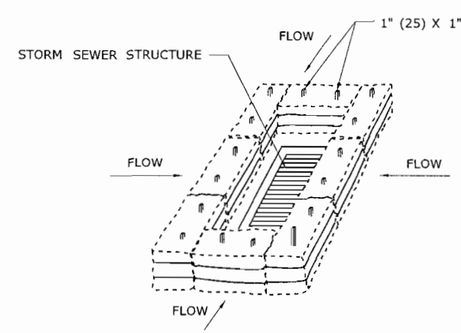

HAY BALE AT CATCH BASIN

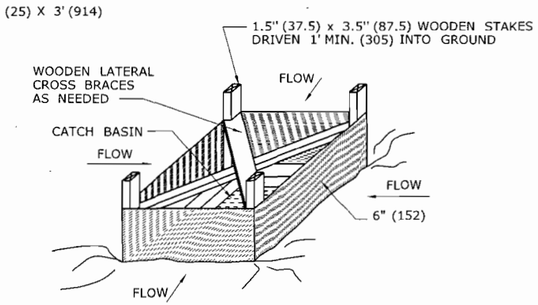

GEOTEXTILE FENCE AT CATCH BASIN

TREATMENT FOR A CATCH BASIN IN A DEPRESSION

ALL METRIC DIMENSIONS ARE IN MILLIMETERS (mm) UNLESS OTHERWISE NOTED.

REV.	DATE	REVISION DESCRIPTION	SHEET NO.

Plotted: 7/30/2010

DESIGNER/DRAFTER:

CHECKED BY:

NOT TO SCALE

STATE OF CONNECTICUT
DEPARTMENT OF TRANSPORTATION

Filename: ...\43_HW_MST_063_H137_MDS-01.dgn

SIGNATURE/BLOCK: LOCHNER
H.W. LOCHNER, INC
2110 Silas Deane Highway
Rocky Hill, CT 06067

APPROVED BY: DATE:

PROJECT TITLE: NEW BRITAIN - HARTFORD BUSWAY HARTFORD NORTH (SECTION B)

TOWN: HARTFORD

DRAWING TITLE: SEDIMENTATION CONTROL TREATMENT DETAILS

PROJECT NO. 63-H137

DRAWING NO. MDS-01

SHEET NO. 43

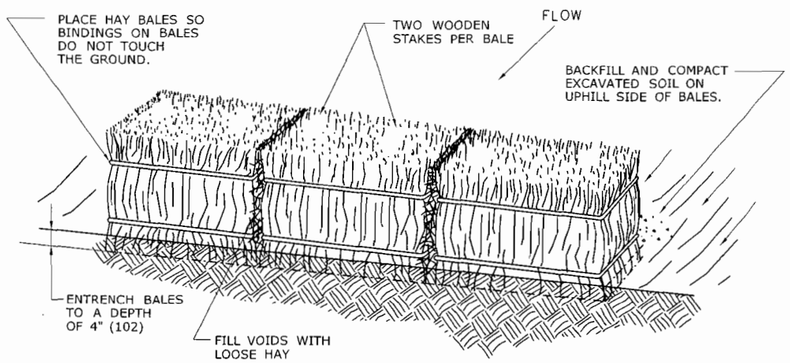

HAY BALE SYSTEM

GENERAL NOTES:

1. HAY BALES SHALL NOT BE USED IN A WATERCOURSE.
2. HAY BALES SHALL BE ENTRENCHED 4" (102) AND TIGHTLY BUTTED TOGETHER. REMOVE HEAVY BRUSH AND FILL ALL VOIDS WITH LOOSE HAY.
3. WOOD STAKES SHALL HAVE A MINIMUM CROSS-SECTION SIZE OF AT LEAST 1" (102) x 1" (102) AND MINIMUM LENGTH OF 4' (1219)
4. CLEAN OUT ACCUMULATED SEDIMENT WHEN ONE-HALF (1/2) OF THE ORIGINAL HEIGHT OF THE HAY BALE FENCE, AS INSTALLED, BECOMES FILLED WITH SEDIMENT OR AS DIRECTED BY THE ENGINEER.
5. NOT TO BE USED IN THE VICINITY OF URBAN AND RESIDENTIAL AREAS.

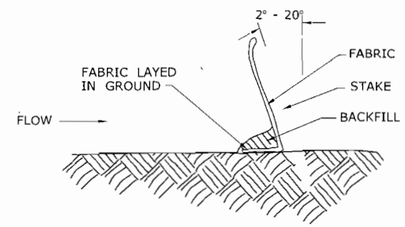

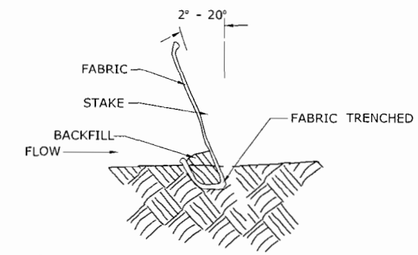

END VIEW

BACKFILLING GEOTEXTILE TOE

TRENCHING GEOTEXTILE TOE

GEOTEXTILE FENCE SYSTEM

GENERAL NOTES:

1. GEOTEXTILE FENCE SHOULD BE PLACED SO THE FENCE LEANS TOWARD THE SOURCE OF SEDIMENT.
2. MAXIMUM SPACING FOR WOODEN STAKES OR STEEL POSTS IS 10.0' (3048).
3. WOOD STAKES SHALL HAVE A MINIMUM CROSS-SECTION SIZE OF 1.5" (457) X 1.5" (457) AND MINIMUM LENGTH OF 4' (1219) STEEL POSTS SHALL BE AT LEAST 0.5 LB. PER FOOT (0.22KG PER CM) WITH A MINIMUM LENGTH OF 4' (1219).
4. WOODEN STAKES OR STEEL POSTS SHALL BE DRIVEN TO A MINIMUM OF 1' (305) INTO THE GROUND.
5. 6" (152) OF GEOTEXTILE SHALL BE BURIED BY BACKFILLING OR TRENCHING AND AT LEAST 2.5' (762) IN HEIGHT OF GEOTEXTILE SHALL BE EXPOSED.
6. FABRIC SHALL BE JOINED ONLY AT A SUPPORT POST WITH A MINIMUM OF 6" (152) OVERLAP AND SECURITY SEALED.
7. UPON RE-ESTABLISHMENT OF GROUND COVER IN DISTURBED AREAS AND WHEN DIRECTED BY THE ENGINEER, OR UPON FINAL INSPECTION FENCE AND ANY SEDIMENT SHALL BE REMOVED. AT NO TIME WILL THE FENCE REMAIN IN PLACE AFTER PROJECT COMPLETION.
8. GEOTEXTILE FENCE SHALL NOT BE USED IN A WATER COURSE.
9. ONLY GEOTEXTILE FROM THE DEPARTMENTS APPROVED PRODUCT LIST SHALL BE USED.
10. BACKFILLING OF GEOTEXTILE SHALL ONLY BE USED WHEN GROUND IS FROZEN OR WHERE OTHER OBSTRUCTIONS ARE ENCOUNTERED THAT PROHIBIT TRENCHING, IE, STUMPS OR ROCKS.
11. CLEAN OUT ACCUMULATED SEDIMENT WHEN ONE-HALF (1/2) OF THE ORIGINAL HEIGHT OF THE GEOTEXTILE FENCE, AS INSTALLED, BECOMES FILLED WITH SEDIMENT OR AS DIRECTED BY THE ENGINEER.

ALL METRIC DIMENSIONS ARE IN MILLIMETERS (mm) UNLESS OTHERWISE NOTED.

REV.	DATE	REVISION DESCRIPTION	SHEET NO.

Plotted: 7/30/2010

DESIGNER/DRAFTER:
CHECKED BY:
NOT TO SCALE

STATE OF CONNECTICUT
DEPARTMENT OF TRANSPORTATION

Filename: ...\44_HW_MST_063_H137_MDS-02.dgn

SIGNATURE/BLOCK: LOCHNER
H.W. LOCHNER, INC
2110 Silas Deane Highway
Rocky Hill, CT 06067

APPROVED BY: DATE:

PROJECT TITLE: NEW BRITAIN - HARTFORD BUSWAY HARTFORD NORTH (SECTION B)

TOWN: HARTFORD

DRAWING TITLE: SEDIMENTATION CONTROL SYSTEM DETAILS

PROJECT NO. 63-H137
DRAWING NO. MDS-02
SHEET NO. 44

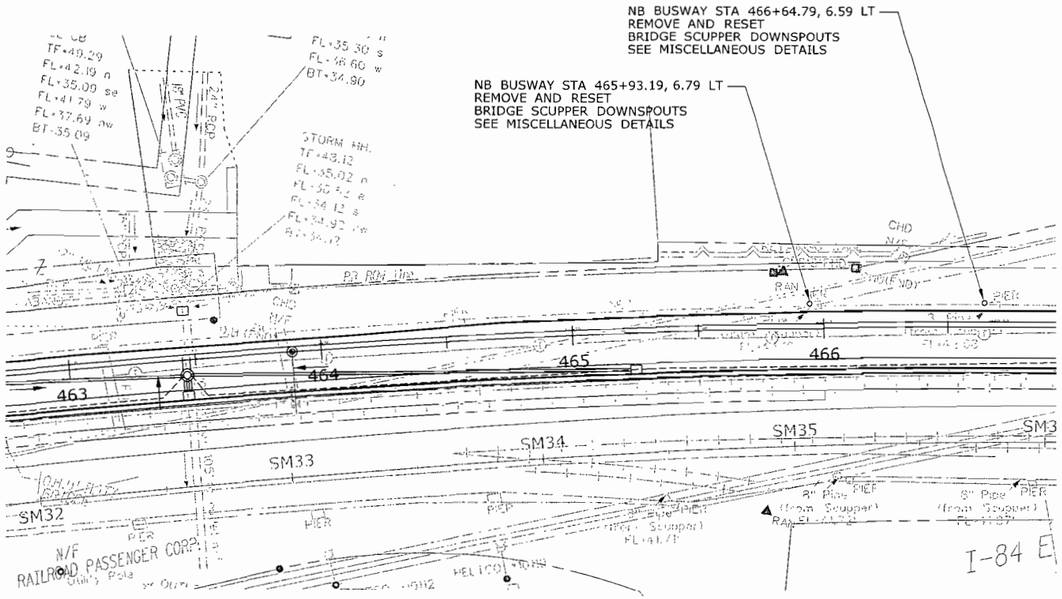

LOCATION A

CASE A LOCATIONS
NB BUSWAY STA 465+93.19, 6.79 LT
NB BUSWAY STA 466+64.79, 6.59 LT

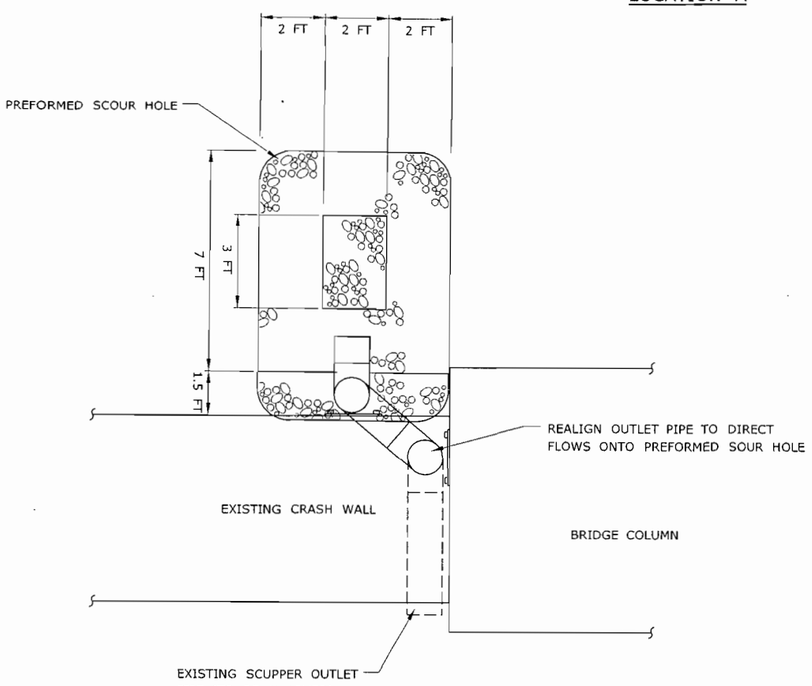

PLAN VIEW

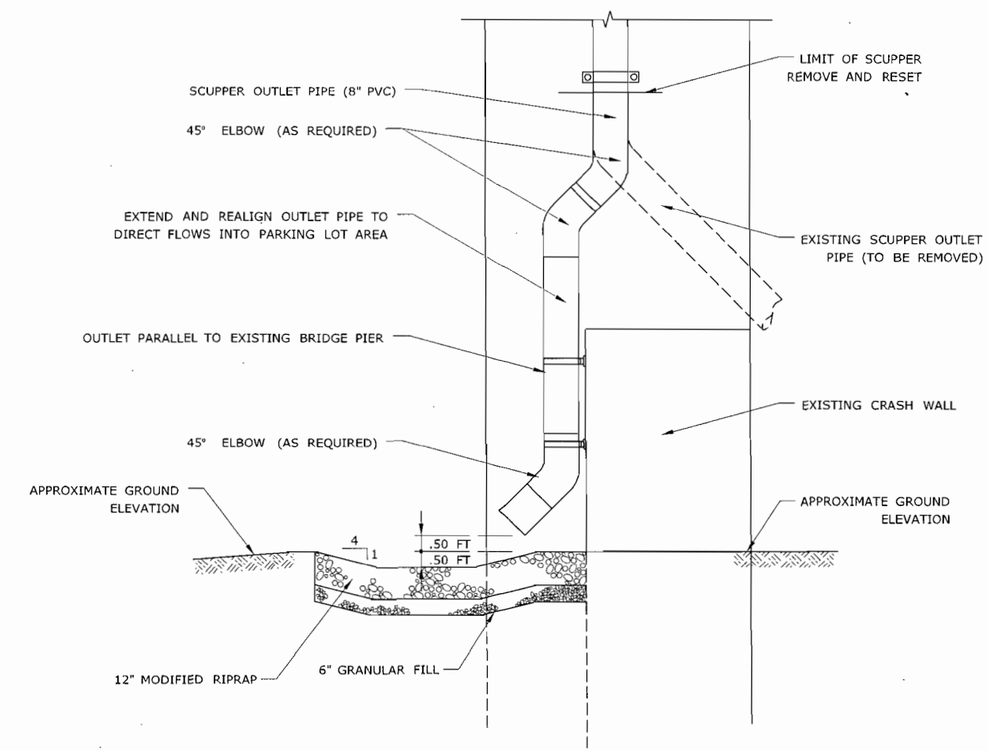

ELEVATION VIEW

NOTE: SCUPPER REALIGNMENT, INCLUDING ELBOWS, BRACKETS, ETC. TO BE PAID UNDER ITEM NO. 651745 - 8-INCH PVC.

SCUPPER OUTLET WITH PREFORMED SCOUR HOLE

REV.	DATE	REVISION DESCRIPTION	SHEET NO.

Plotted: 7/30/2010

DESIGNER/DRAFTER:
CHECKED BY:
NOT TO SCALE

STATE OF CONNECTICUT
DEPARTMENT OF TRANSPORTATION

Filename: ...\45_HW_MST_063_H137_MDS-03.dgn

SIGNATURE/BLOCK: LOCHNER
H.W. LOCHNER, INC
2110 Silas Deane Highway
Rocky Hill, CT 06067

APPROVED BY: DATE:

PROJECT TITLE: NEW BRITAIN - HARTFORD BUSWAY HARTFORD NORTH (SECTION B)

TOWN: HARTFORD

DRAWING TITLE: MISCELLANEOUS DETAILS: SCUPPER OUTLET 1 OF 3

PROJECT NO. 63-H137
DRAWING NO. MDS-03
SHEET NO. 45

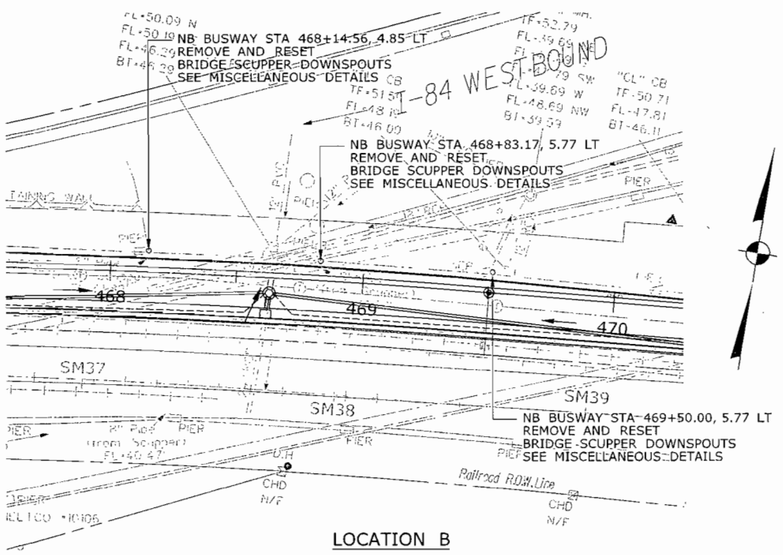

LOCATION B

CASE B LOCATIONS
NB BUSWAY STA 468+14.56, 4.85 LT
NB BUSWAY STA 468+83.17, 5.77 LT
NB BUSWAY STA 469+50.00, 5.77 LT

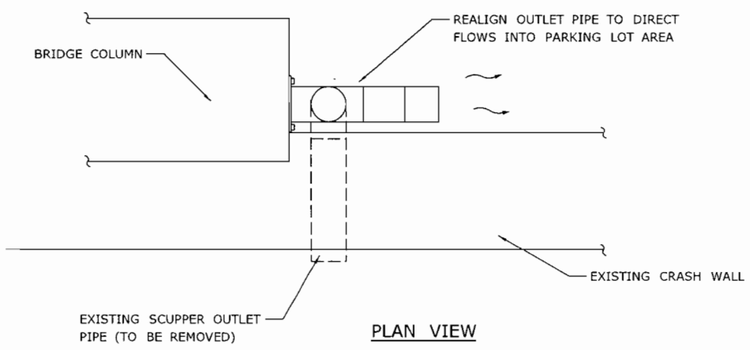

PLAN VIEW

NOTE: SCUPPER REALIGNMENT, INCLUDING ELBOWS, BRACKETS, ETC. TO BE PAID UNDER ITEM NO. 651745 - 8-INCH PVC.

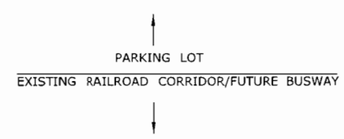

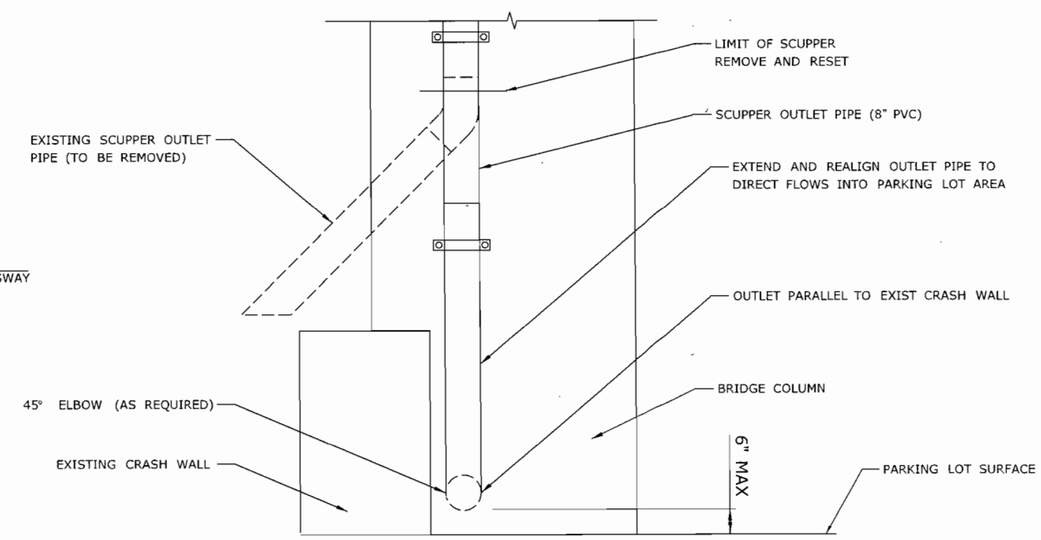

ELEVATION VIEW

SCUPPER OUTLET AT BRIDGE COLUMNS

REV.	DATE	REVISION DESCRIPTION	SHEET NO.

Plotted: 7/30/2010

DESIGNER/DRAFTER:
CHECKED BY:
NOT TO SCALE

STATE OF CONNECTICUT
DEPARTMENT OF TRANSPORTATION

Filename: ...\46_HW_MST_063_H137_MDS-04.dgn

SIGNATURE/BLOCK: LOCHNER
H.W. LOCHNER, INC
2110 Silas Deane Highway
Rocky Hill, CT 06067

APPROVED BY: DATE:

PROJECT TITLE: NEW BRITAIN - HARTFORD BUSWAY HARTFORD NORTH (SECTION B)

TOWN: HARTFORD

DRAWING TITLE: MISCELLANEOUS DETAILS: SCUPPER OUTLET 2 OF 3

PROJECT NO. 63-H137
DRAWING NO. MDS-04
SHEET NO. 46

CASE C LOCATION
NB BUSWAY STA. 470+90.00, 12.00 LT

NB BUSWAY STA 470+90.00, 12.00 LT
REMOVE AND RESET
BRIDGE SCUPPER DOWNSPOUTS
SEE MISCELLANEOUS DETAILS

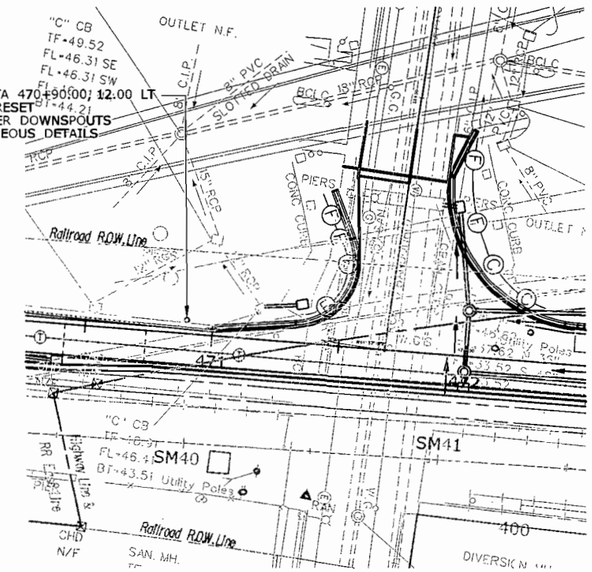

LOCATION C

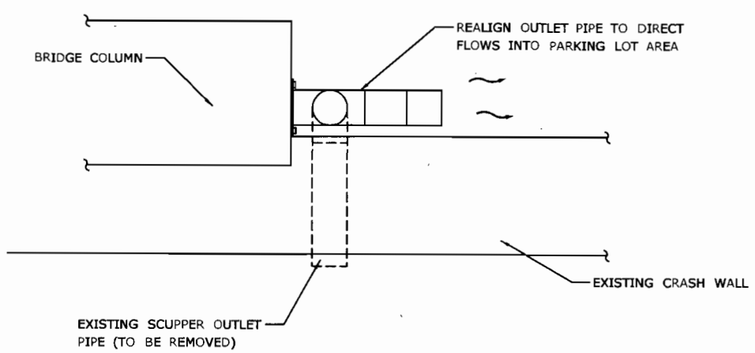

PLAN VIEW

NOTE: SCUPPER REALIGNMENT, INCLUDING ELBOWS, BRACKETS, ETC. TO BE PAID UNDER ITEM NO. 651745 - 8-INCH PVC.

PARKING LOT

EXISTING RAILROAD CORRIDOR/FUTURE BUSWAY

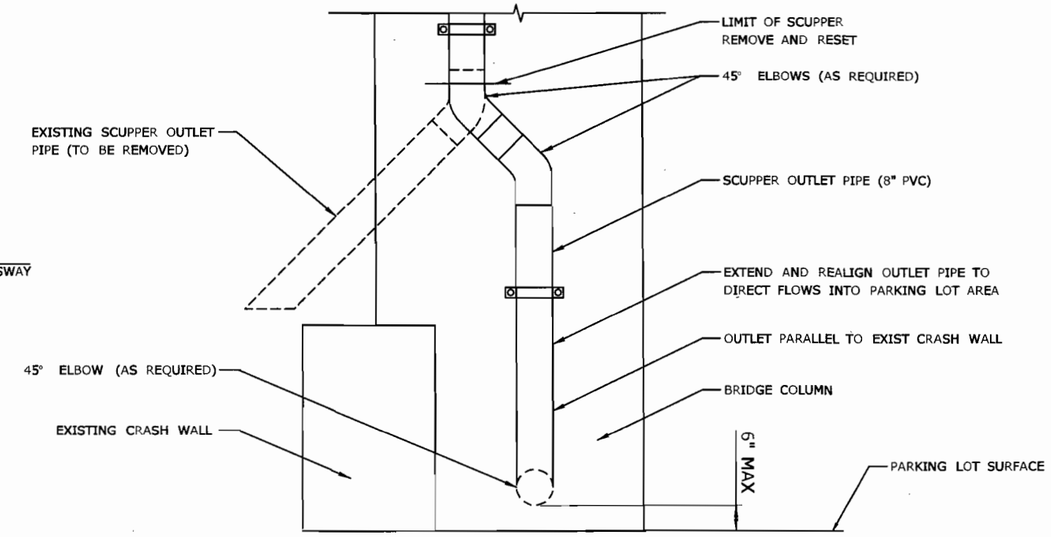

ELEVATION VIEW

EXISTING RAILROAD CORRIDOR/FUTURE BUSWAY

PARKING LOT

SCUPPER OUTLET AT BRIDGE COLUMNS

REV.	DATE	REVISION DESCRIPTION	SHEET NO.	Plotted: 6/7/2010

DESIGNER/DRAFTER: D. MULLANEY
CHECKED BY: R. BRAY
NOT TO SCALE

STATE OF CONNECTICUT
DEPARTMENT OF TRANSPORTATION

Filename: ...\HW_MST_063_H137_MDS-027.dgn

SIGNATURE/BLOCK: LOCHNER
H.W. LOCHNER, INC
2110 Silas Deane Highway
Rocky Hill, CT 06067
APPROVED BY: DATE:

PROJECT TITLE: NEW BRITAIN - HARTFORD BUSWAY HARTFORD NORTH

TOWN: HARTFORD

DRAWING TITLE: MISCELLANEOUS DETAILS

PROJECT NO. 63-H137
DRAWING NO. MDS-05
SHEET NO. 47

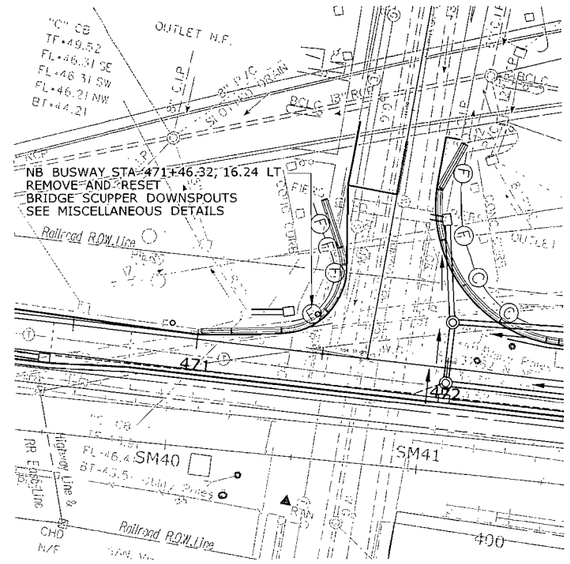

LOCATION D

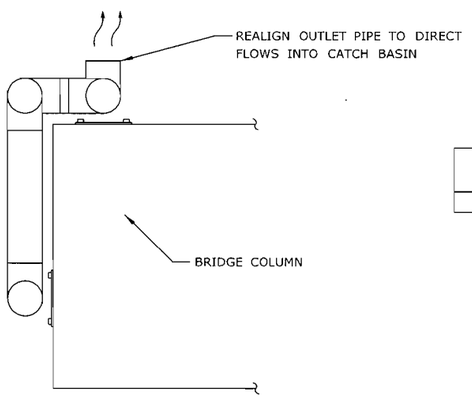

CASE D LOCATION
NB BUSWAY STA 471+46.32, 16.24 LT

PLAN VIEW

NOTE: SCUPPER REALIGNMENT, INCLUDING ELBOWS, BRACKETS, ETC. TO BE PAID UNDER ITEM NO. 651745 - 8-INCH PVC.

SCUPPER OUTLET AT
BRIDGE COLUMN
(FLOWER STREET)

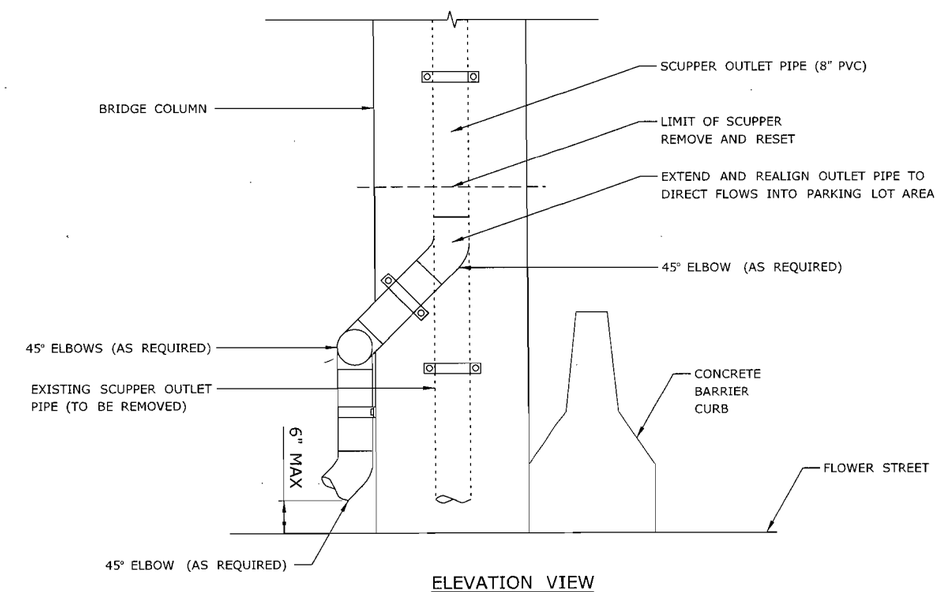

ELEVATION VIEW

REV.	DATE	REVISION DESCRIPTION	SHEET NO.	Plotted: 7/30/2010

DESIGNER/DRAFTER:
CHECKED BY:
NOT TO SCALE

STATE OF CONNECTICUT
DEPARTMENT OF TRANSPORTATION
Filename: ...\48_HW_MST_063_H137_MDS-06.dgn

SIGNATURE/BLOCK: LOCHNER
H.W. LOCHNER, INC
2110 Silas Deane Highway
Rocky Hill, CT 06067
APPROVED BY: DATE:

PROJECT TITLE: NEW BRITAIN - HARTFORD BUSWAY HARTFORD NORTH (SECTION B)

TOWN: HARTFORD

DRAWING TITLE: MISCELLANEOUS DETAILS: SCUPPER OUTLET 3 OF 3

PROJECT NO. 63-H137
DRAWING NO. MDS-06
SHEET NO. 48

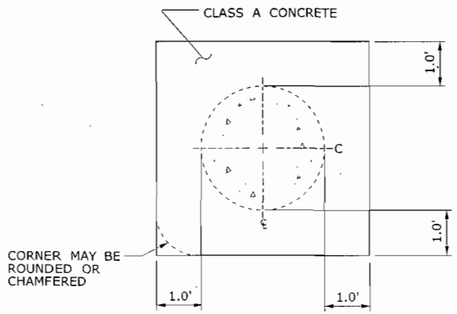

SECTION C-C

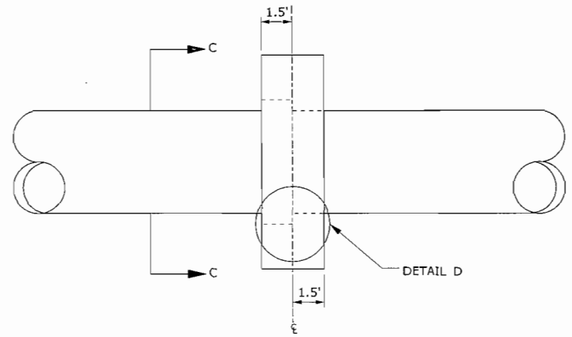

ELEVATION

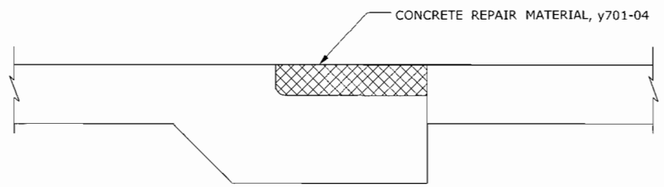

DETAIL D

CONCRETE PIPE CONNECTION

NOTES:

1. NOTE CONCRETE PIPE CONNECTION TO BE USED WITH PIPES WHERE PROPER CONNECTION CAN NOT BE ACHIEVER OR AS DIRECTED BY THE ENGINEER.

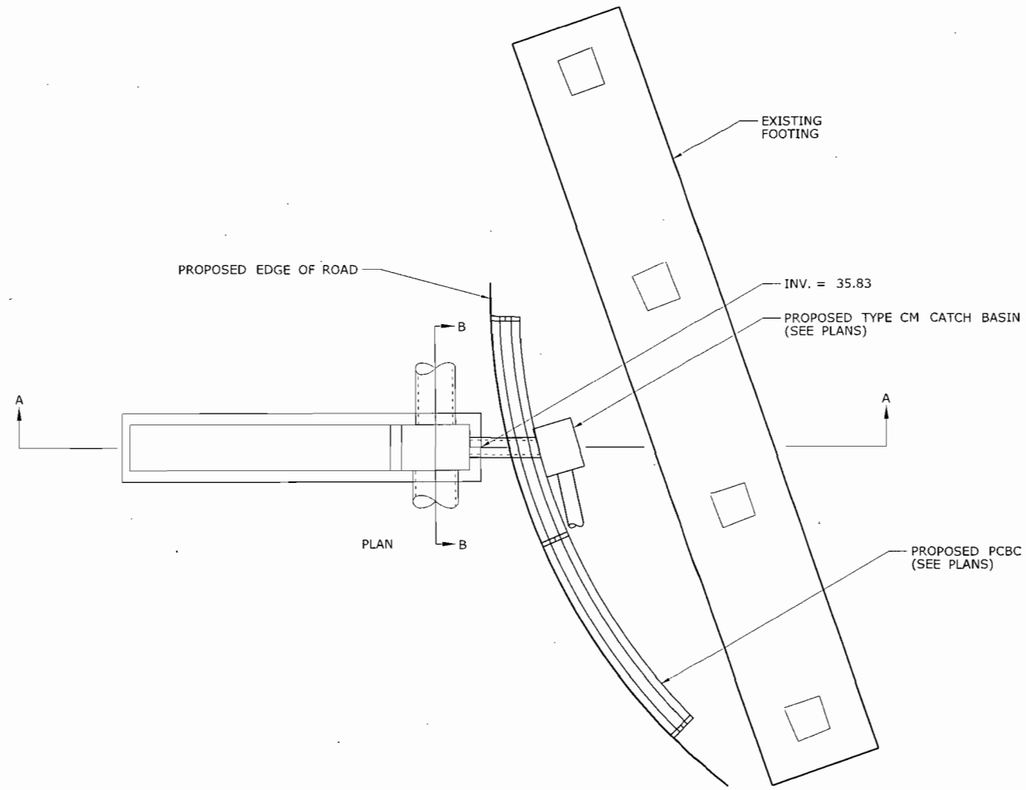

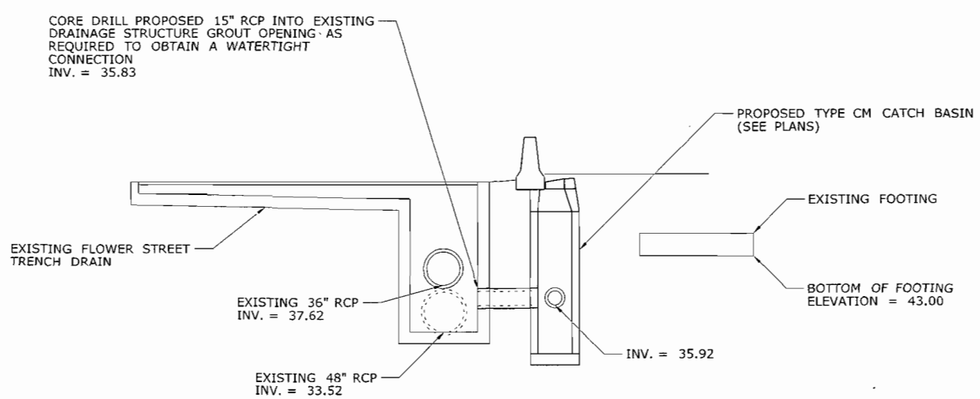

SECTION A-A

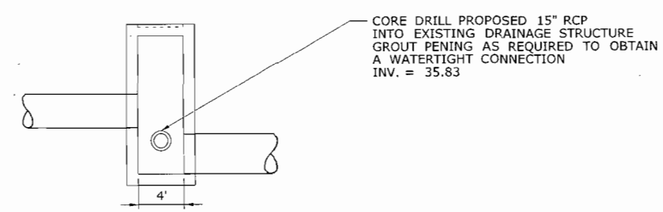

SECTION B-B

CATCH BASIN CONNECTION

REV.	DATE	REVISION DESCRIPTION	SHEET NO.

THE INFORMATION, INCLUDING ESTIMATED QUANTITIES OF WORK, SHOWN ON THESE SHEETS IS BASED ON LIMITED INVESTIGATIONS BY THE STATE AND IS IN NO WAY WARRANTED TO INDICATE THE CONDITIONS OF ACTUAL QUANTITIES OF WORK WHICH WILL BE REQUIRED.

Plotted: 7/30/2010

DESIGNER/DRAFTER:

CHECKED BY:

NOT TO SCALE

STATE OF CONNECTICUT
DEPARTMENT OF TRANSPORTATION

Filename: ...\49_HW_MST_063_H137_MDS-07.dgn

SIGNATURE/BLOCK: LOCHNER
H.W. LOCHNER, INC
2110 Silas Deane Highway
Rocky Hill, CT 06067

APPROVED BY: DATE:

PROJECT TITLE: NEW BRITAIN - HARTFORD BUSWAY HARTFORD NORTH (SECTION B)

TOWN: HARTFORD

DRAWING TITLE: MISCELLANEOUS DETAILS: CATCH BASIN CONNECTION

PROJECT NO. 63-H137

DRAWING NO. MDS-07

SHEET NO. 49