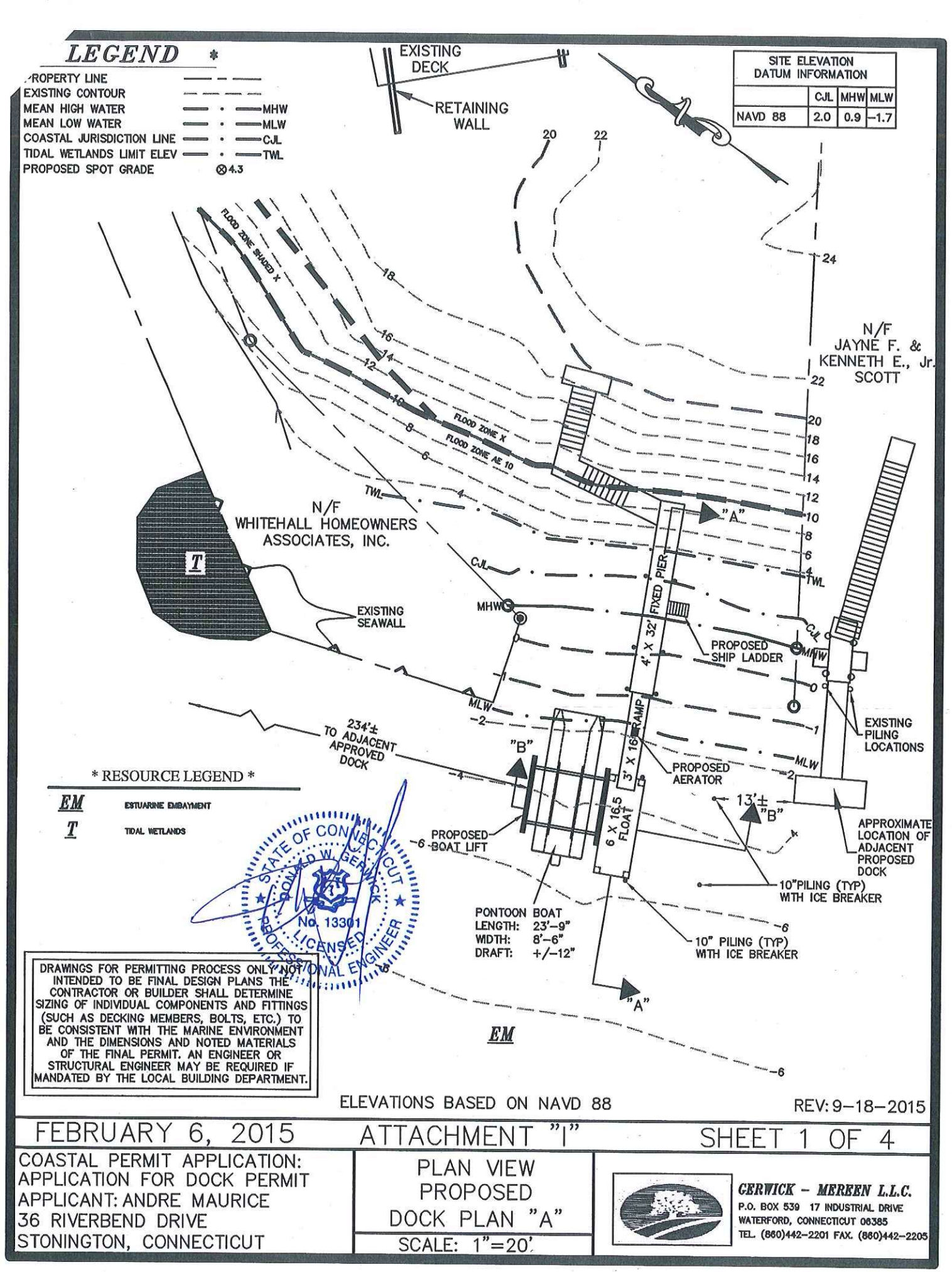

ELEVATIONS BASED ON NAVD 88

REV: 9-18-2015

FEBRUARY 6, 2015 | ATTACHMENT "1" | SHEET 1 OF 4

COASTAL PERMIT APPLICATION:
APPLICATION FOR DOCK PERMIT
APPLICANT: ANDRE MAURICE
36 RIVERBEND DRIVE
STONINGTON, CONNECTICUT

PLAN VIEW
PROPOSED
DOCK PLAN "A"
SCALE: 1"=20'

GERWICK - MEREEN L.L.C.
P.O. BOX 539 17 INDUSTRIAL DRIVE
WATERFORD, CONNECTICUT 06385
TEL. (860)442-2201 FAX. (860)442-2205

SITE ELEVATION DATUM INFORMATION			
	CJL	MHW	MLW
NAVD 88	2.0	0.9	-1.7

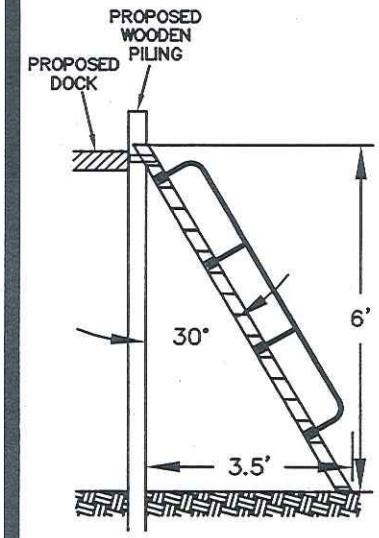

SHIPS LADDER
SCHEMATIC
N.T.S.

CROSS SECTION "A–A"

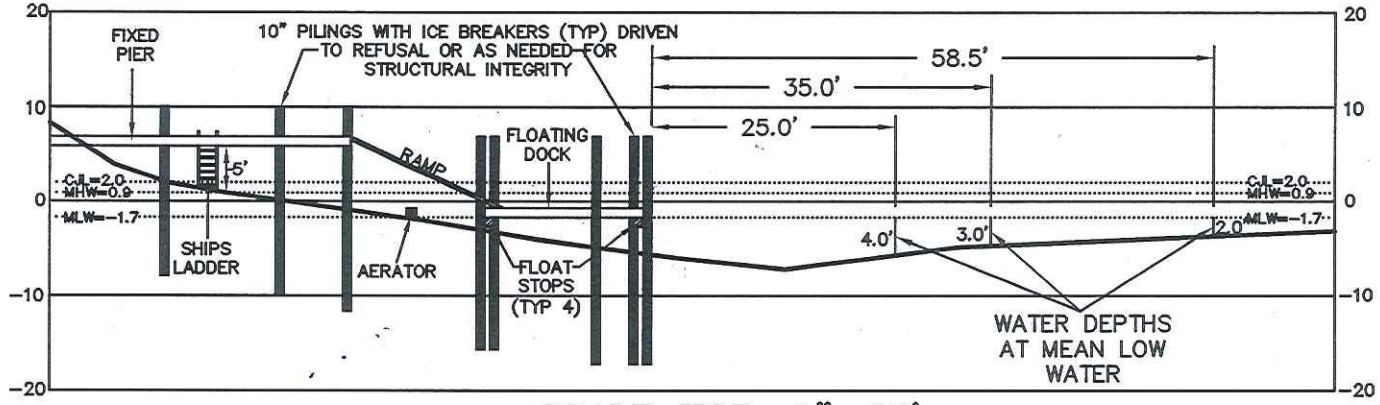

SCALE HOR: 1"=20'
VERT: 1"=20'

CROSS SECTION "B–B"

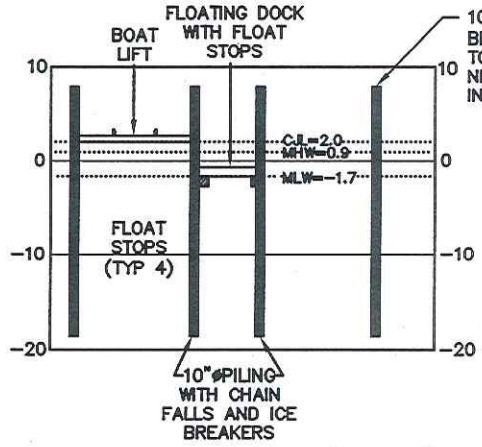

SCALE HOR: 1"=20'
VERT: 1"=20'

ELEVATIONS BASED ON NAVD 88

DRAWINGS FOR PERMITTING PROCESS ONLY NOT INTENDED TO BE FINAL DESIGN PLANS THE CONTRACTOR OR BUILDER SHALL DETERMINE SIZING OF INDIVIDUAL COMPONENTS AND FITTINGS (SUCH AS DECKING MEMBERS, BOLTS, ETC.) TO BE CONSISTENT WITH THE MARINE ENVIRONMENT AND THE DIMENSIONS AND NOTED MATERIALS OF THE FINAL PERMIT. AN ENGINEER OR STRUCTURAL ENGINEER MAY BE REQUIRED IF MANDATED BY THE LOCAL BUILDING DEPARTMENT.

REV: 9–18–2015

FEBRUARY 6, 2015 | ATTACHMENT "I" | SHEET 2 OF 4

COASTAL PERMIT APPLICATION:
APPLICATION FOR DOCK PERMIT
APPLICANT: ANDRE MAURICE
36 RIVERBEND DRIVE
STONINGTON, CONNECTICUT

ELEVATION VIEW
SCALE: AS NOTED

PLAN "A"

GERWICK – MEREEN L.L.C.
P.O. BOX 539 17 INDUSTRIAL DRIVE
WATERFORD, CONNECTICUT 06385
TEL. (860)442–2201 FAX. (860)442–2205

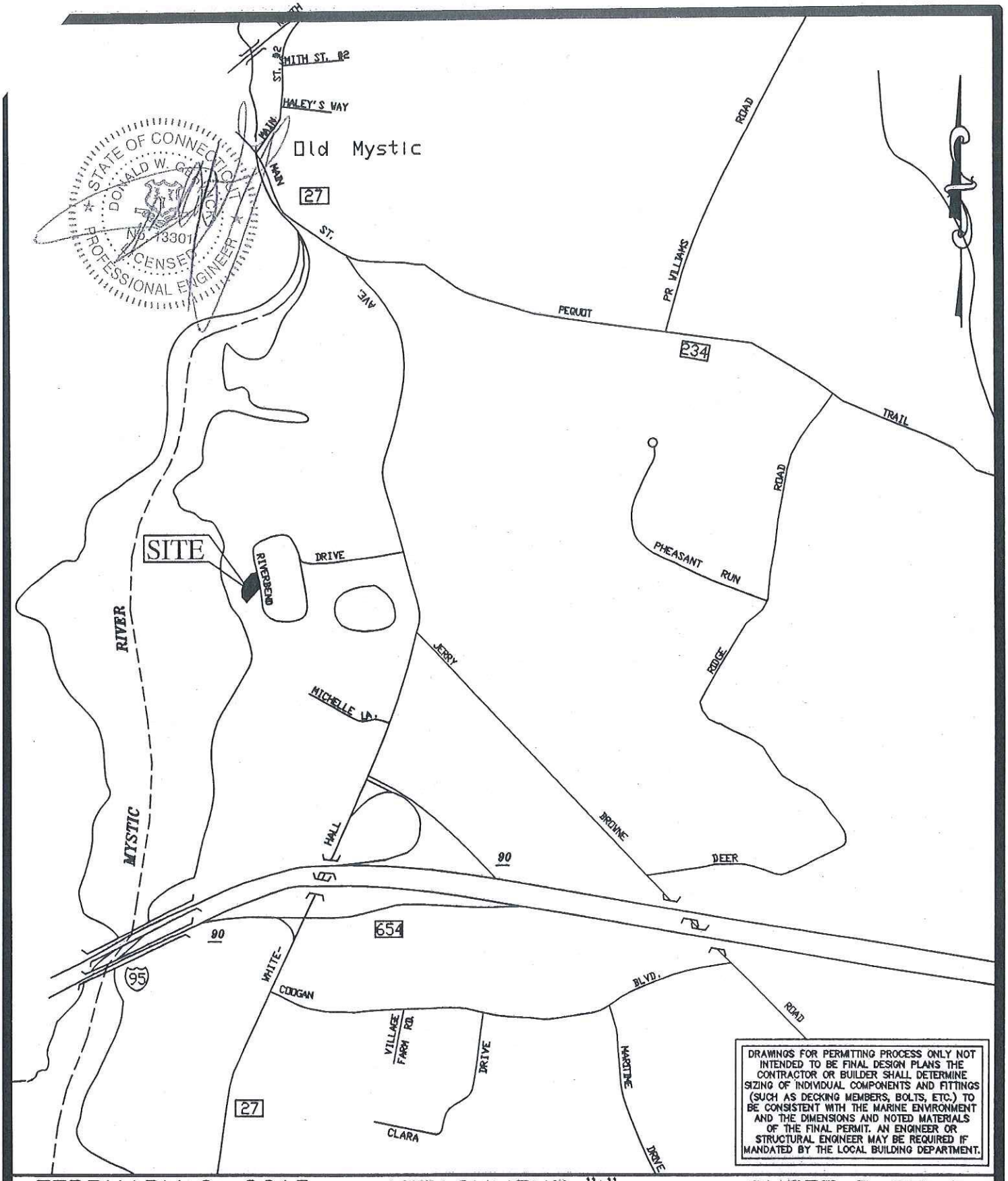

DRAWINGS FOR PERMITTING PROCESS ONLY NOT INTENDED TO BE FINAL DESIGN PLANS THE CONTRACTOR OR BUILDER SHALL DETERMINE SIZING OF INDIVIDUAL COMPONENTS AND FITTINGS (SUCH AS DECKING MEMBERS, BOLTS, ETC.) TO BE CONSISTENT WITH THE MARINE ENVIRONMENT AND THE DIMENSIONS AND NOTED MATERIALS OF THE FINAL PERMIT. AN ENGINEER OR STRUCTURAL ENGINEER MAY BE REQUIRED IF MANDATED BY THE LOCAL BUILDING DEPARTMENT.

FEBRUARY 6, 2015 ATTACHMENT "1" SHEET 3 OF 4

COASTAL PERMIT APPLICATION:
APPLICATION FOR DOCK PERMIT
APPLICANT: ANDRE MAURICE
36 RIVERBEND DRIVE
STONINGTON, CONNECTICUT

VICINITY MAP
SCALE: 1"=1000'±

GERWICK - MEREEN L.L.C.
P.O. BOX 539 17 INDUSTRIAL DRIVE
WATERFORD, CONNECTICUT 06385
TEL. (860)442-2201 FAX. (860)442-2205

OWNERS	PROPERTY ADDRESS	MAILING ADDRESS
WILLIAM S FERGUSON	33 RIVERBEND DR STONINGTON, CT. 06378	SAME AS PROPERTY
JOHN COUTO	34 RIVERBEND DR STONINGTON, CT. 06378	34 RIVERBEND DR STONINGTON, CT. 06378
GREGORY K REIZIAN	35 RIVERBEND DR STONINGTON, CT. 06378	SAME AS PROPERTY
WILLIAM V ABT	37 RIVERBEND DR STONINGTON, CT. 06378	SAME AS PROPERTY
KENNETH E JR SCOTT & F JAYNE	38 RIVERBEND DR STONINGTON, CT. 06378	SAME AS PROPERTY
WHITEHALL HOMEOWNERS ASSOCIATION INC. C/O CAROL BARNES CRAIG	RIVERBEND DR STONINGTON, CT. 06378	18 RIVERBEND DRIVE STONINGTON, CT. 06378

STATE OF CONNECTICUT
DONALD W. GERWICK
No. 13301
LICENSED
PROFESSIONAL ENGINEER

DRAWINGS FOR PERMITTING PROCESS ONLY NOT INTENDED TO BE FINAL DESIGN PLANS THE CONTRACTOR OR BUILDER SHALL DETERMINE SIZING OF INDIVIDUAL COMPONENTS AND FITTINGS (SUCH AS DECKING MEMBERS, BOLTS, ETC.) TO BE CONSISTENT WITH THE MARINE ENVIRONMENT AND THE DIMENSIONS AND NOTED MATERIALS OF THE FINAL PERMIT. AN ENGINEER OR STRUCTURAL ENGINEER MAY BE REQUIRED IF MANDATED BY THE LOCAL BUILDING DEPARTMENT.

FEBRUARY 6, 2015 ATTACHMENT "I&K" SHEET 4 OF 4

COASTAL PERMIT APPLICATION:
APPLICATION FOR DOCK PERMIT
APPLICANT: ANDRE MAURICE
36 RIVERBEND DRIVE
STONINGTON, CONNECTICUT

LIST OF ADJOINING PROPERTY OWNERS
SCALE: 1"=100'

GERWICK - MEREEN L.L.C.
P.O. BOX 539 17 INDUSTRIAL DRIVE
WATERFORD, CONNECTICUT 06385
TEL. (860)442-2201 FAX. (860)442-2205