CTDEP Lean Project
Major Source Air Permit Modeling

Presented by Dave Wackter to SIPRAC September 11,2008

What is LEAN?

Lean is an approach and set of methods that seeks to eliminate all non-value added activity or “waste” from a process.

The Lean Modeling Team

(Team champion: Tracy Babbidge)

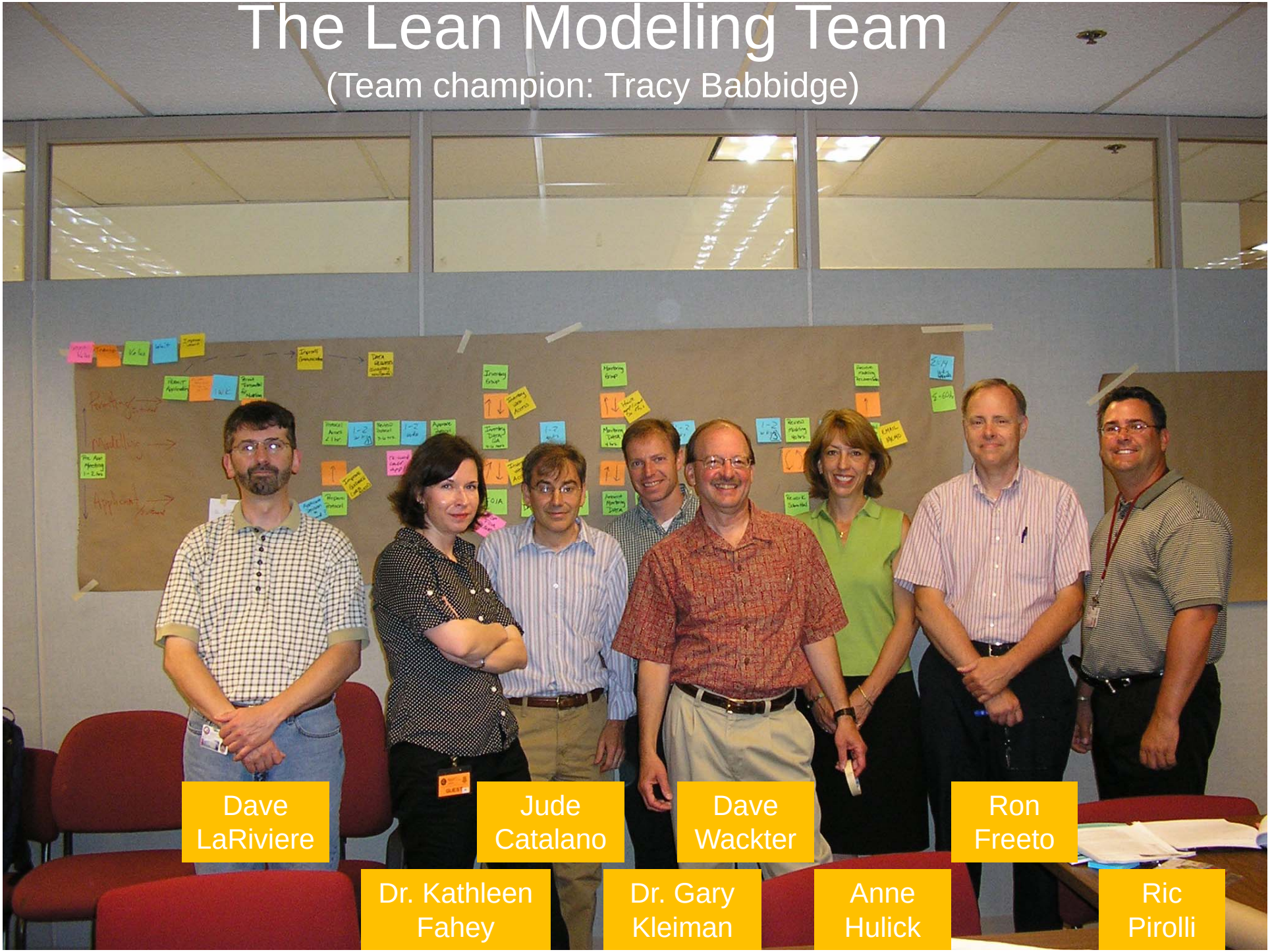

Why Are We doing this?

- Connecticut needs
  - Electricity Reliability
  - Competitive Power Prices
  - Improved Air Quality

- Minimizing regulatory uncertainty can support investments in clean, new generation.

Modeling Basics

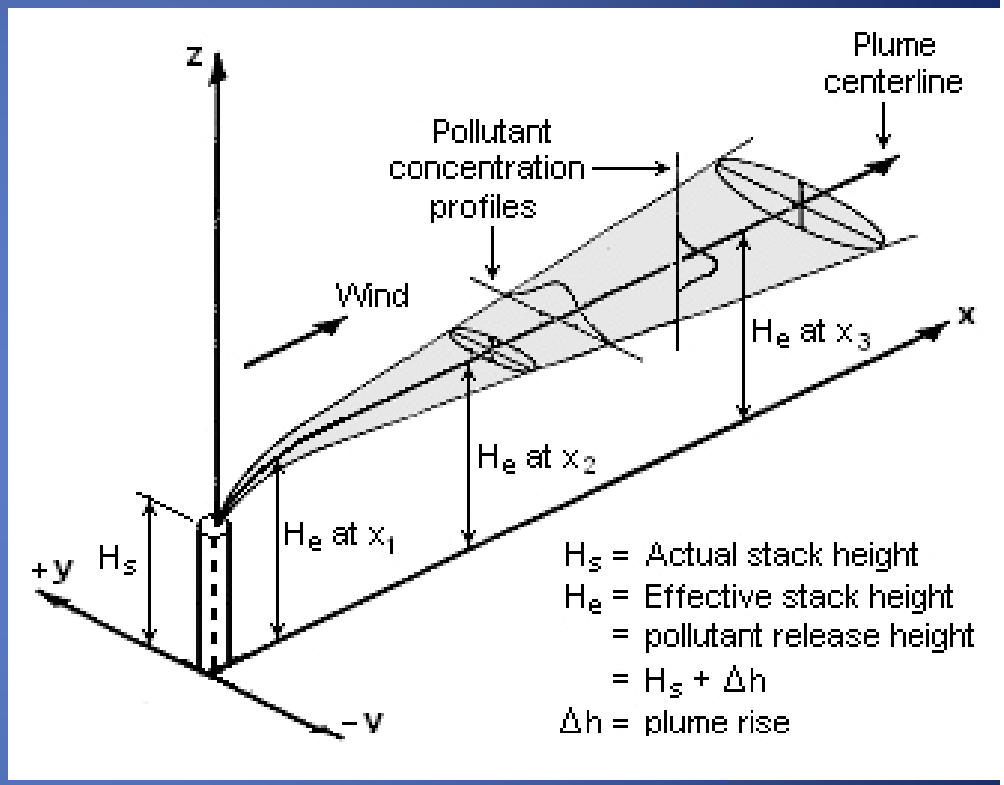

<u>Dispersion Modeling Objectives</u>

1. **Support permit and enforcement reviews**
2. **Ensure proposed project will not degrade air quality**

Overview of Presentation

- Introduction
- The Kaizen event
- Progress to date

  (Visuals, Web pages, Directives, Guidance)
- Lessons learned; What's next?

Leanovations International

Transforming Tomorrow Today

Lean Project Team Charter

Sensei: Fred Shamburg

Project Name:	**Major Source Air Permit Modeling**	**Dates:** **Times:** **Location:**	**6/9-6/12** **8:30 – 4:30** **DEP HQ, Room TBD**
Training and Brainstorming Session:	**To document current state and identify areas of efficiency**	**Dates:** **Times:** **Location**	**6/9-6/10** **8:30 – 4:3** **DEP HQ, Room TBD**
Daily Update Meetings:	**6/9- 6/12 @3:45-4:30pm**	**Final Presentation**	**6/12** **3:00**
Champion (s):	**Tracy Babbidge**	**Team Leader**	**Dave Wackter**

1	**Problem Statement:**	Major source air modeling review is affecting the timely issuance of new source review permits.
2	**Project Scope / Objectives:**	Update and streamline modeling process to eliminate delay. Develop Project Plan to implement changes.
3	**Key Team members:**	Dave Wackter, Dave Catalano, Dave LaRiviere, Ric Pirolli, Ron Freeto, Anne Hulick, NESCAUM
4	**Goals**	Reduce the processing time by 1/3. ~ 90 days to 60 days Develop time measurement system for tracking and reporting projects Increase efficiencies in disseminating inventory data Update guidance and make process more visible to stakeholders

Tools		
	M	Charter Form
	M	Idea Tracking Chart (ITC)
	M	Progress Report
		Cost Reduction Form (Form 3)
		Training Plan Form
		Standard Combination Work Sheet
M = Mandatory Use		Measurement Graphs / Improvement Suggestion Logs

Where we started…

LEAN Modeling Team Objectives

- Learn and apply Lean principles
- Reduce the processing time by 1/3
- Develop and track key performance indicators (KPI)
- Improve information transfer
- Develop project plan for implementation.

We did a 4 day Kaizen

Kaizen activities lead to continual improvement

Plan… Do… Check… Act

- Define the Baseline Process
- Value Stream Mapping (a visual process flow)
- Spaghetti charts of current flow
- Idea tracking
- Just do it! (Eliminate non-value added steps)
- Project Plan

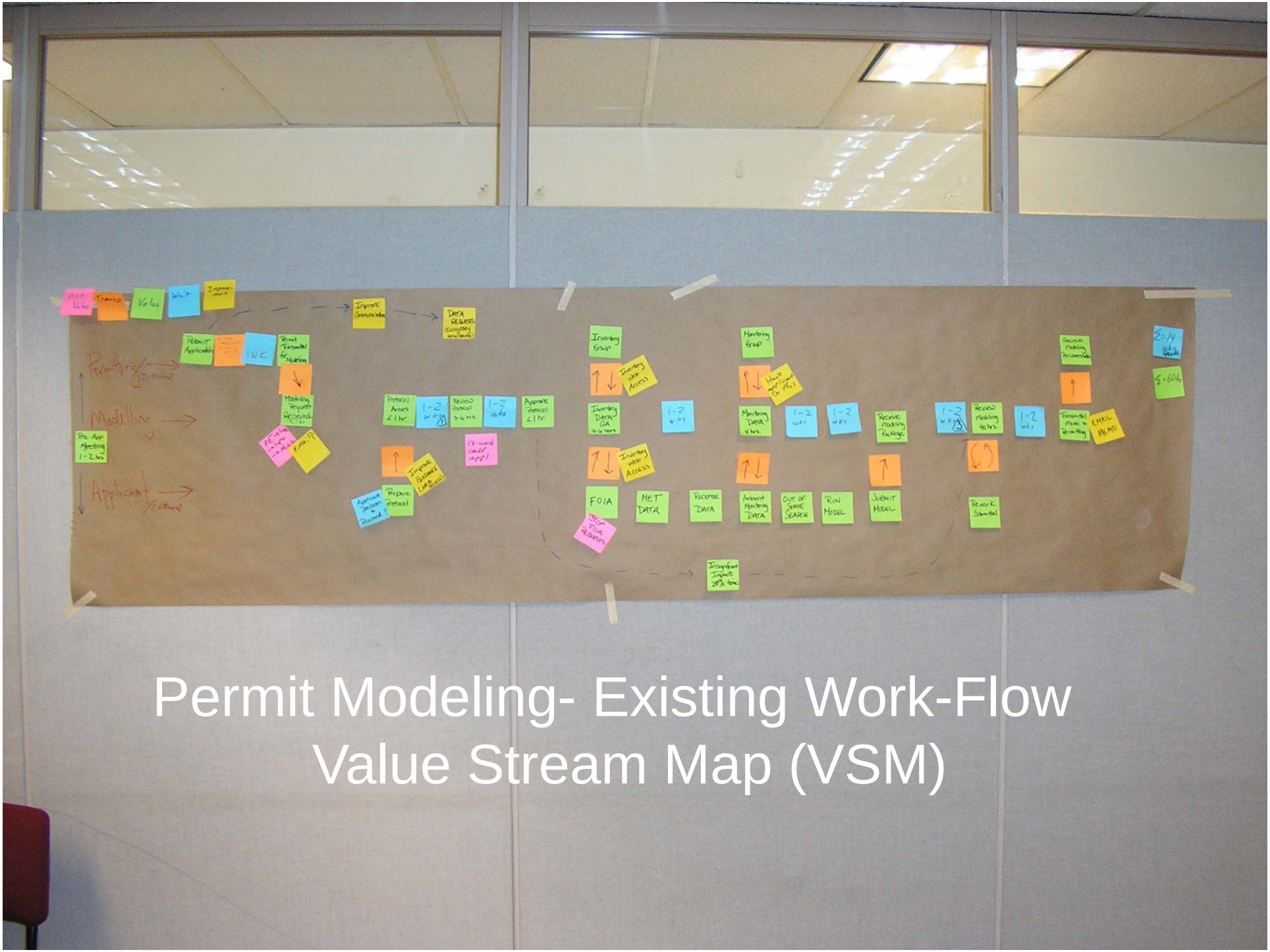

Permit Modeling- Existing Work-Flow Value Stream Map (VSM)

NEW BUSINESS RULES

Now 1. Request Modeling Protocol as part of permit application
- Require 2 Applications 1 permitting + 1 modeling — R.A.P

'09 2. Inventory Group QA inventory data. Tracy - Bill

Now 3. Communicate electronically
- Creates Time Record
- Eliminate Sup. sign-off
- Application

Now 4. Request Modeling Meeting

Now 5. Permit Pre App meetings w/o Modeling

Key Performance Indicators

- Track In/Out Dates:
  1) Permit Application Receipt
  2) Protocol transmittal date
  3) Pre-modeling meeting date
  4) Protocol Approval date
  5) Receipt of modeling report
  6) Rework request
  7) Rework receipt
  8) Approval of modeling

Lean Modeling Team Project Plan (6 12 08).xlsx

Initial Project Plan June 12, 2008 (Page 1 of 2)

TASK/ACTIVITY	TASK OWNER(S)	PARTICIPANTS	June '08	July '08	Aug '08	Sept '08	Oct '08	Nov '08	Dec '08	Jan '09	Feb '09	March '09	Apr '09	May '09	June '09	EXPECTED RESULTS
1. Rewrite modeling guidance	Tracy	Dave, Jude, Sam														New Guidance on web
Review current guidance from other states		Jude, Sam														
Meeting with region modeling contacts		Dave, Jude	Jun 24/25													Input from States
Identify best guidance for possible template		Jude, Sam														
Draft CT version of guidance		Jude														
Provide to SIPRAC for comment		Dave														
Finalize document		Jude														Input from Applicants/Consultants
Post on web		Allie														
2. Implement new business rules	Management	Anne, Tracy, Ric														
Permit pre-app meetings w/out modeling		Ric														
Require 2 copies of permit application		Ric														
Request modeling protocol w/ permit appl		Ric														
Request Modeling Protocol electronically		Ric														
QA inventory data		Tracy, Bill S.														
Communicate e[illegible] Creates time [illegible] Eliminate super[illegible] sign [illegible]		Tracy, Ric														
Request modeling meeting w/ applicant		Jude														
Eliminate FOIA request for inventory data		Tracy														
Periodic meetings of LEAN team		Anne, Tracy, Ric														
Electronic records retention		Liz														
		Color Code Key	N Targ	trugglin	O Actio	Future										

Where we started...

Lean Modeling Team Project Plan (6 12 08).xlsx

Initial Project Plan June 12, 2008 (Page 2 of 2)

TASK/ACTIVITY	TASK OWNER(S)	PARTICIPANTS	June '08	July '08	Aug '08	Sept '08	Oct '08	Nov '08	Dec '08	Jan '09	Feb '09	March '09	Apr '09	May '09	June '09	EXPECTED RESULTS
3. Meteorology data on web	David Wackter	Jude, Sam, Allie														Met data posted on web
Download met data & USGS data		Jude, Sam														
QA data		Jude, Sam														
Run AERMET& AERSURFACE (site & year)		Jude, Sam														
Post on Web		Allie													annual	
4. Ambient monitoring data on web	Tracy	Monitoring group														Monitoring data posted on web
Prepare spreadsheet of Criteria pollutants		Monitoring group														
Post on web		Allie													annual	
5. PM 2.5 data on web	Tracy	Monitoring group														Monitoring data posted on web
Prepare spreadsheet form for each site		Monitoring group														
Post on web		Allie													annual	
6. Emissions inventory data on web	Tracy	Bill, Jude, Allie														Emission Inventory posted on web
Identify data elements		Jude														
Write SAS program to extract data		Bill														
QA/QC data		Bill														
Post on web (update annually)		Allie													annual	
Public access of EMIT inventory system		Holly, Bill														
7. Create & Maintain Visual Boards	Tracy, Ric	Ric, Dave, Jude														Visual Boards of Modeling Status
Design		Dave														
Post		Ric, Jude														
Maintain		Ric, Jude														
		Color Code Key	N Targ	trugglin	O Actic	Future										

Where we started...

KPI NSR modelng [Compatibility Mode] - Microsoft Excel

Data Review View

Wrap Text | Merge & Center | Alignment | General | Number | Conditional Formatting | Format as Table | Cell Styles | Styles | Insert | Delete | Format | Cells | AutoSum | Fill | Clear | Sort & Filter | Find & Select | Editing

D PERMIT MODELING KEY PERFORMANCE INDICATORS

Permit Applications Received After January 1, 2006

iscription	Permit App. Receipt	Pre-modeling Meeting	Protocol Received	Protocol Approved	Received Modeling	Re-work Requested	Re Re
New Haven, CT: d Power.	Mar-08	?			pending		
tion., Montville, CT: mbustion turbines; ric power.	Jan-08	?	Nov-07	Dec-07	1/11/2008		
CT: rbine;	Apr-07	?	Apr-07	Sep-07	4/1/2007	Jul-07 Apr-08	
t Power), Waterbury, CT n turbine; er generation.	Aug-07	?	Oct-07	Dec-07	3/13/2008		
nergy, Watertown, CT: ion boiler;	Sep-07	?	NA	NA	10/30/2007		
Ansonia, CT: d Power.	Jun-07	NA	NA	NA	9/21/2007	Mar-08	
burner;	Mar-07	?	NA	NA	11/5/2007		

Current Status of NSR Modeling Projects

For Applications Received After January 1, 2006

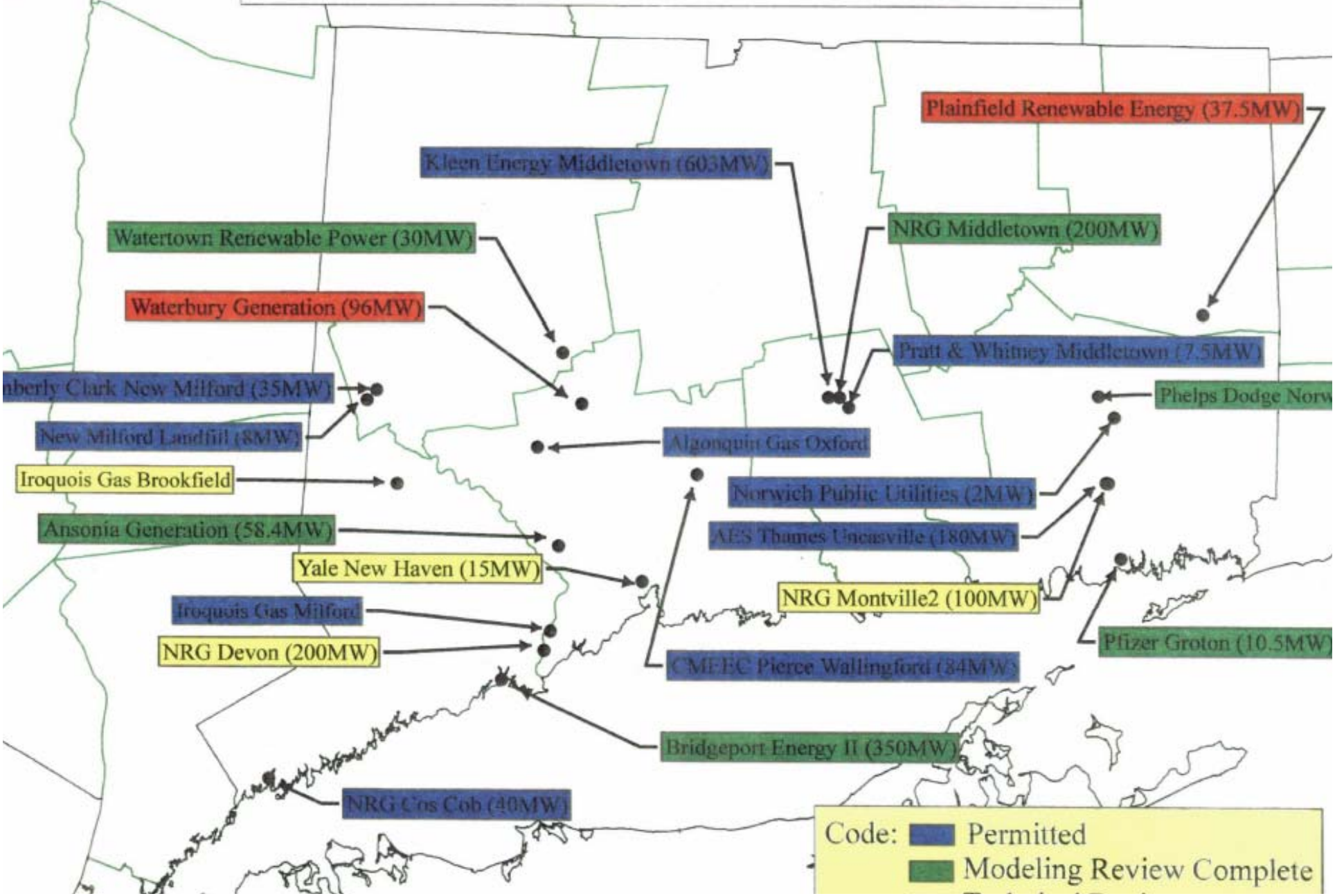

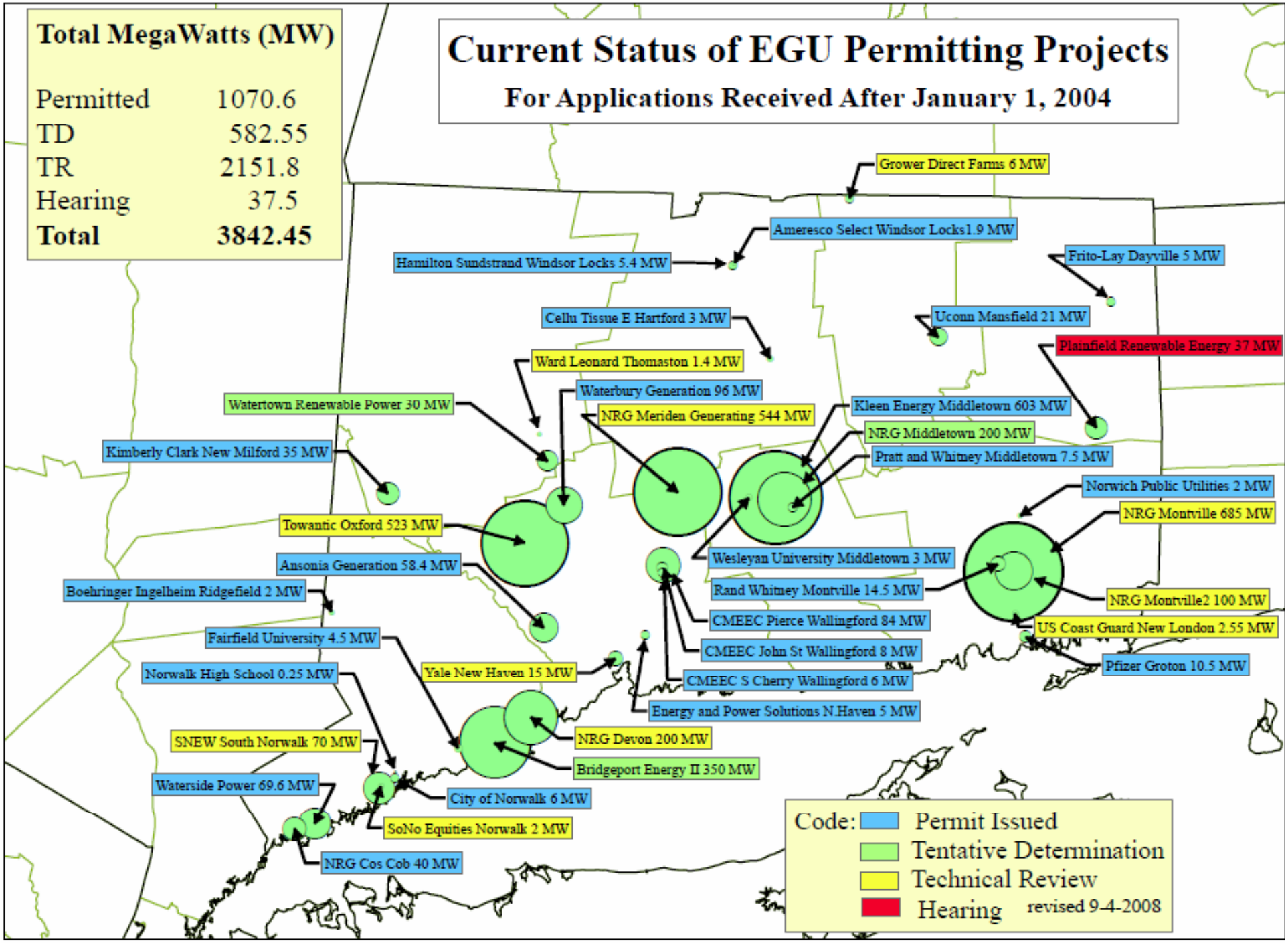
Current Status of EGU Permitting Projects
For Applications Received After January 1, 2004
Total MegaWatts (MW)
Permitted 1070.6
TD 582.55
TR 2151.8
Hearing 37.5
Total 3842.45
Grower Direct Farms 6 MW
Ameresco Select Windsor Locks1.9 MW
Hamilton Sundstrand Windsor Locks 5.4 MW
Frito-Lay Dayville 5 MW
Cellu Tissue E Hartford 3 MW
Uconn Mansfield 21 MW
Plainfield Renewable Energy 37 MW
Ward Leonard Thomaston 1.4 MW
Waterbury Generation 96 MW
Watertown Renewable Power 30 MW
NRG Meriden Generating 544 MW
Kleen Energy Middletown 603 MW
NRG Middletown 200 MW
Pratt and Whitney Middletown 7.5 MW
Kimberly Clark New Milford 35 MW
Norwich Public Utilities 2 MW
NRG Montville 685 MW
Towantic Oxford 523 MW
Wesleyan University Middletown 3 MW
Ansonia Generation 58.4 MW
Rand Whitney Montville 14.5 MW
Boehringer Ingelheim Ridgefield 2 MW
NRG Montville2 100 MW
CMEEC Pierce Wallingford 84 MW
US Coast Guard New London 2.55 MW
Fairfield University 4.5 MW
CMEEC John St Wallingford 8 MW
Pfizer Groton 10.5 MW
Norwalk High School 0.25 MW
Yale New Haven 15 MW
CMEEC S Cherry Wallingford 6 MW
Energy and Power Solutions N.Haven 5 MW
SNEW South Norwalk 70 MW
NRG Devon 200 MW
Bridgeport Energy II 350 MW
Waterside Power 69.6 MW
City of Norwalk 6 MW
SoNo Equities Norwalk 2 MW
NRG Cos Cob 40 MW
Code:
Permit Issued
Tentative Determination
Technical Review
Hearing
revised 9-4-2008

Visual Keys to Our Progress

Color Code Key	ON Target	Struggling	NO Action	Future	Completed

Project Plan (updated 9 9 08)

TASK/ACTIVITY	TASK OWNER(S)	PARTICIPANTS	June '08	July '08	Aug '08	Sept '08	Oct '08	Nov '08	Dec '08	Jan '09	Feb '09	Mar '09	Apr '09	May '09	June '09	EXPECTED RESULTS
1. Rewrite modeling guidance	Dave Wackter								Dec 30							New Guidance on web
Review current guidance from other states		Jude, Sam														Review other modeling guidance
Meeting with region's modeling contacts		Dave, Jude	Jun 23/24													Input from States
Identify best guidance as a template		Jude, Sam				Sep 30										Select best guidance
Draft CT version of guidance		Jude														Draft CT version
Provide to SIPRAC for comment		Dave														Input from Applicants/Consultants
Finalize document		Jude, Sam														Finalize modeling guidance
Post on web		Allie							Dec 30							Post modeling guidance on web
2. Implement new business rules	Tracy, Ric															Streamline the process
Permit pre-app meetings w/out modeling attendance Issue Directive		Ric		Aug 1												Issue Directive
Request modeling meeting w/ applicant Issue Directive		Ric		Aug 1												Issue Directive
Amend Permit Application Instructions Require submission of 2 paper & 1 electronic copy of permit application Request modeling protocol w/ permit application		Kleman, Ron		Aug 1												Update web site
Communicate electronically Creates time record Eliminate supervisor sign off Issue Directive		Tracy, Ric		Aug 1												Issue Directive
Eliminate FOIA request for inventory data		Tracy		Aug 1												Issue Directive
Rules for Electronic Records Storage (SIMS)		Liz		Aug 1												Implement SIMS rules
Periodic meetings of LEAN team		Anne, Tracy, Ric	Jun 18	Jul 15	Aug 14	Sep 16			Dec 11			1st Qtr			2nd Qtr	Review progress
		Color Code Key	ON Target		Struggling		NO Action		Future		Completed					

Project Plan (updated 9 9 08) (Page 2 of 2)

TASK/ACTIVITY	TASK OWNER(S)	PARTICIPANTS	June '08	July '08	Aug '08	Sept '08	Oct '08	Nov '08	Dec '08	Jan '09	Feb '09	Mar '09	Apr '09	May '09	June '09	EXPECTED RESULTS
3. Meteorology data on web - Update Annually 6/1	David Wackter														annual update	Met data posted on web
Discuss Regional data set development with NESCAUM		Dave, Jude	Jun 23/24													Input from States
Prepare useable existing data sets for web posting		Jude, Sam				Sep 30										Prepare data
Post useable data sets on Web		Allie							Dec 30							Post data on web
Develop work plan for building additional data sets		Jude, Sam					Oct 30									Develop work plan
Prepare additional existing data sets for web posting Download met data & USGS data Work Plan for data gap filling Run AERMET & AERSURFACE QA data		Jude, Sam											Apr 30			Prepare data
Post additional data sets on Web		Allie											Apr 30			Post data on web
4. Ambient monitoring data on web - Update Annually 6/1	Tracy			Aug 1											annual update	Monitoring data posted on web
Prepare spreadsheet design concentrations for Criteria Pollutants		Randy S.		Aug 1												Prepare data
Post Map of Sites on web		Allie		Aug 1												Post map on web
Post data on web		Allie		Aug 15											annual update	Post data on web
5. PM 2.5 data on web - Update Annually 6/1	Tracy			Aug 15												
Prepare spreadsheet of daily PM data for each monitoring site		Randy S.		Aug 15												Prepare data
Post data on web		Allie		Aug 15												Post data on web
6. Emissions Inventory data on web - Update Annually 6/1	Tracy														annual update	Emission Inventory posted on web
Develop Work Plan		Tracy		Aug 1												Develop work plan
QA Inventory data		Tracy, Bill S.														QA Inventory data
Post data on web		Allie														Post data on web
7. Create & Maintain Visual Boards	Ric															Visual Boards of Modeling Status
Develop Modeling Project Status Spreadsheet		Jude		Jul 15												Develop spreadsheet
Post Spreadsheet outside Jude's Cube		Jude		Jul 15												Post spreadsheet
Maintain Spreadsheet		Jude														Maintain spreadsheet
Design Visual Map of Modeling Projects		Michael G., Jude			Aug 15											Design Map
Place Map in 5th Floor Lobby)		Michael G., Jude			Aug 15											Post Map in lobby
Maintain Map		Michael G., Jude														Maintain map
		Color Code Key	ON Target		Struggling		NO Action		Future		Completed					

New Business Rules

- Permit application process
- Inventory
- Improving communication flow
- Modeling process
- Streamlining information sharing with customers

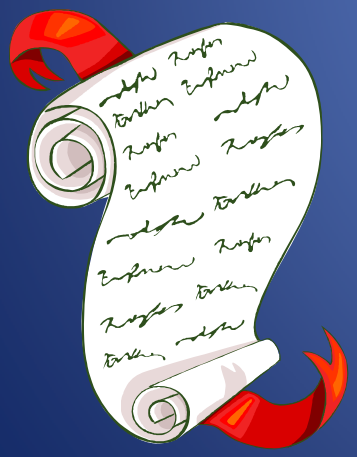

AIR

- AIR QUALITY & HEALTH
- AIR POLLUTANTS & CONTROL STRATEGIES
- AIR MONITORING
- ENERGY
- FUELS
- MOBILE SOURCES
- OPEN BURNING
- REGULATING AIR EMISSIONS
- ENVIRONMENTAL PROTECTION BEGINS WITH YOU
- AIR MAIN PAGE
- DEP MAIN MENU

GOVERNOR'S CARE & SHARE

Department of Environmental Protection
79 Elm Street
Hartford, CT 06106-5127

Phone:
(860) 424-3000

Air Quality Modeling

Background on Air Quality Modeling:

The Clean Air Act – as amended in 1977 – mandated that air quality modeling be used as a tool to assess compliance with certain provisions of the Act. These provisions include attainment and maintenance of national Ambient Air Quality Standards and prevention of significant deterioration of air quality.

What is Air Quality Modeling?

Air quality models use mathematical techniques to simulate the physical and chemical processes that affect air pollutants as they scatter throughout the atmosphere. Based on inputs of meteorological data and source information, these models are designed to characterize both primary and secondary pollutants that are either emitted into the atmosphere or are formed as a result of complex chemical reactions within the atmosphere. Monitoring of air quality, on the other hand, is normally only performed at a fixed location for a limited duration. Modeling, therefore, complements monitoring by filling in information gaps in space and time.

What is the purpose of Air Quality Modeling?

Air Quality Modeling is used to assess the impact of air pollution from stationary sources. The Connecticut Regulations for the Abatement of Air Pollution require stationary sources of air pollution to be registered through the DEP, so Modeling is also the way to obtain a Permit to construct new sources or to modify existing sources. Air Quality Models can help in determining the needed controls to bring a source to attainment standards as well.

Further information:

EPA Air Quality Modeling Information

Air Quality Modeling Guidance **<= This link will lead to Guidance Page now in draft form**

Air Quality Modeling Guidance

General Requirements	Model Selection	Source Data
Meteorological Data	Background Air Quality	Analysis

An air quality modeling demonstration is a key step in the licensing process. As with any licensing effort, great care must be taken to insure that the results are not only as accurate as possible, but also conform to all applicable state and federal modeling requirements.

The information presented here is intended to clearly inform you of what the Connecticut Department of Environmental Protection - Bureau of Air Management (CTDEP-BAM) expects and requires for modeling submittals. Following these recommendations should greatly reduce the time, effort and expense of air quality modeling.

The following pages (and links) are provided as general guidance to help you through the air quality modeling process. Some currently approved models are identified and discussed in this document. Although the intent is for information to be as complete as possible, this guidance is also meant to be somewhat broad, as modeling methodologies and analyses can greatly vary from one project to the next. It is very important that you work in close consultation with the CTDEP-BAM as you prepare to submit a valid modeling protocol and demonstration.

General Requirements

(text to be added)

Model Selection

GOVERNOR'S CARE & SHARE

Department of Environmental Protection
79 Elm Street
Hartford, CT 06106-5127

Phone:
(860) 424-3000

NESCAUM States

Founded in 1967 to address air pollution problems in New England, New York and New Jersey.

Air Pollutant Emissions

- EMIT *On-Line*
  - Streamline, standardize, modernize inventory process.
  - Extracts for modeling.
- Create a model for e-government.
- Past Process Streamlining Efforts
  - Small Business Assistance efforts

Lessons Learned

- Learning and applying Lean principles
- On our way to reduce the processing time by 1/3
- Developed and are tracking key performance indicators (KPI)
- Improving information transfer
- Implementing our project plan- completed 20 tasks out of 38 so far!
- On the road to e-government solutions.
  - New tools for our business.
  - Enhanced web access for our customers.