Basic Structural Design for Code Officials

Milton Gregory Grew, AIA
Licensed Architect / Building Official
Codes Consultant, Grew Design Inc
Acting Building Official, Town of East Hartford

Spring 2012 Career Development Program
Office of Education and Data Management
Connecticut Dept. of Construction Services

Material to be covered

- Overview 2003 IRC structural requirements
- ***Basic*** design of rafters, rafter ties, ceiling joists, floor joists, girders, beams
  - Gravity loads
- How to evaluate residential framing design for code compliance

Who's the structural designer?

- Not the code official!!!
- What we do:
  - R104.1 – enforce the provisions of this code
  - R104.2 – receive applications, review construction documents, and issue permits
  - R104.11 – approve alternative materials, designs & methods of construction
  - R105.3.1 – examine construction documents
  - R106.3 – examine construction documents for code compliance
  - R109.1.4 – inspection of framing
- We check what someone else designs

Who's the structural designer?

- Most IRC projects are exempt from requiring a licensed architect
  - CGS Sec. 20-298. Exempted activities.
    - (2) the construction or alteration of a residential ***building*** to provide dwelling space for ***not more than two families***, or of a private garage or other accessory building intended for use with such residential building, or of any farm building or structure for agricultural use
    - (8) the making of plans and specifications for or supervising the erection of any building, any building addition or any alteration to an existing building, where the building, including any addition, contains ***less than 5,000 square feet*** total area…exterior dimensions of the outside walls of the building and shall include all occupiable floors or levels

Who's the structural designer?

R106.1 Submittal documents. Construction documents, special inspection and structural observation programs, and other data shall be submitted in one or more sets with each application for a permit. The construction documents shall be prepared by a registered design professional where required by the statutes of the jurisdiction in which the project is to be constructed. Where special conditions exist, the building official is authorized to require additional construction documents to be prepared by a registered design professional.

Exception: The building official is authorized to waive the submission of construction documents and other data not required to be prepared by a registered design professional if it is found that the nature of the work applied for is such that reviewing of construction documents is not necessary to obtain compliance with this code.

Who's the structural designer?

- Engineer

R301.1.3 Engineered design. When a building of otherwise conventional construction contains structural elements exceeding the limits of Section R301 or otherwise, not conforming to this code, these elements shall be designed in accordance with accepted engineering practice. The extent of such design need only demonstrate compliance of nonconventional elements with other applicable provisions and shall be compatible with the performance of the conventional framed system. Engineered design in accordance with the *International Building Code* is permitted for all buildings and structures, and parts thereof, included in the scope of this code.

Loads – Code Requirements

SECTION R301
DESIGN CRITERIA

R301.1 Design. Buildings and structures, and all parts thereof, shall be constructed to safely support all loads, including dead loads, live loads, roof loads, flood loads, snow loads, wind loads and seismic loads as prescribed by this code. The construction of buildings and structures shall result in a system that provides a complete load path capable of transferring all loads from their point of origin through the load-resisting elements to the foundation.

R301.1.1 Alternative provisions. As an alternative to the requirements in Section R301.1 the following standards are permitted subject to the limitations of this code and the limitations therein. Where engineered design is used in conjunction with these standards the design shall comply with the *International Building Code*.

1. American Forest and Paper Association (AF&PA) *Wood Frame Construction Manual* (WFCM).
2. American Iron and Steel Institute (AISI), *Standard for Cold-Formed Steel Framing—Prescriptive Method for One- and Two-family Dwellings* (COFS/PM).

Load Path

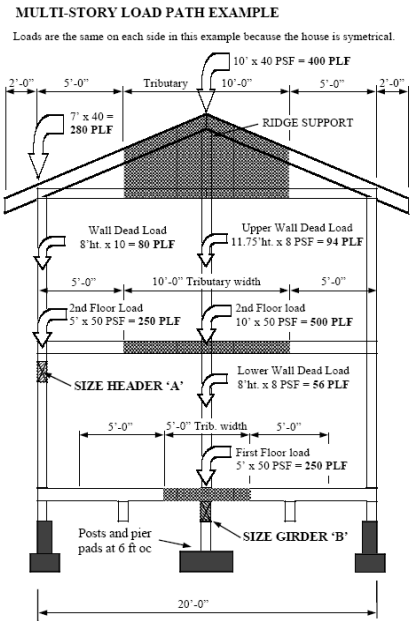

Loads - Types

- Dead Loads
- Live Loads
- Roof Loads
- Snow Loads

Uniform Loads

THE PLF ALL ALONG THIS RAFTER OR FLOOR JOIST IS ONE SQUARE FOOT x **1.33** BECAUSE THE SPACING IS 16" o.c. (16" / 12" = 1.33)
Similarly 24" o.c. would equal the load in PSF x **2.0**

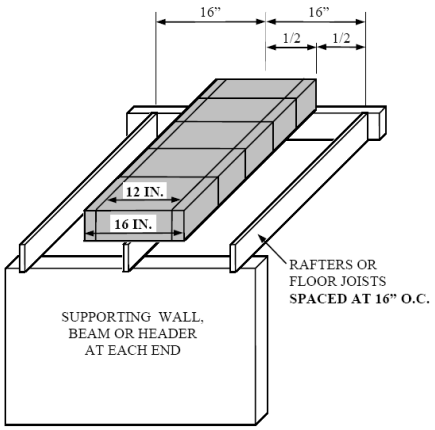

Dead Loads

- Definition

  [B] DEAD LOADS. The weight of all materials of construction incorporated into the building, including but not limited to walls, floors, roofs, ceilings, stairways, built-in partitions, finishes, cladding, and other similarly incorporated architectural and structural items, and fixed service equipment.

- If you can't move it, it's dead load.
- Weights of materials not in code
- Load tables in code assume some basic dead loads
- Framing has to carry itself

Dead Loads

- Commentary for definition

  - Dead loads are considered in the structural design of a building and are used in the span tables for sizing floor joists, ceiling joists and rafters. The weight of the materials of construction joists, sheathing, studs and gypsum board is counted as the dead load, as are stairways, cladding and fixed service equipment. The dead loads make up the fixed load that is placed in the building and are independent from the live loads.

Dead Loads

- Commentary for R301.4

- The actual weights of materials of construction must be used to determine the dead loads. The code requires the weight of fixed service equipment (see the definition in Chapter 2) to be included as well. It is important to verify that the actual dead loads of proposed buildings are within the limits of the dead load allowance in the prescriptive design tables of subsequent chapters. Otherwise, in accordance with Section R301.1, a design is required. Also, the dead load limits of Section R301.2.2.2 must be met where required by a structure's seismic design category as explained in the commentary for Section R301.2.2.

  The dead load of a building or other structure is the weight of all permanent construction, such as floors, roofs, permanent partitions, stairways, and walls. The actual weights of materials and construction should be considered along with the dead load of fixed service equipment in building design. Commentary Table R301.4 provides the weight of typical residential building components. Sources of information for weights of fixed service equipment include manufacturer's literature and trade association publications.

Dead Loads

TABLE R301.4
MINIMUM DESIGN DEAD LOADS FOR TYPICAL RESIDENTIAL COMPONENTS

COMPONENT	LOAD (psf)
CEILINGS	
Acoustical fiber tile	1
Gypsum board (per $^1/_8$ inch thickness)	0.55
Mechanical duct allowance	4
Plaster on tile or concrete	5
Plaster on wood lath	8
Suspended steel channel system	2
Suspended metal lath and cement plaster	15
Suspended metal lath and gypsum plaster	10
Wood-furring suspension system	2.5
COVERINGS, ROOF AND WALL	
Asbestos-cement shingles	4
Asphalt shingles	2
Cement tile	16
Clay tile (for mortar add 10 lb.)	
Book tile, 2-inch	12
Book tile, 3-inch	20
Ludowici	10
Roman	12
Spanish	19
Composition:	
Three-ply ready roofing	1
Four-ply felt and gravel	5.5
Five-ply felt and gravel	6

TABLE R301.4 — (continued)

FLOORS AND FLOOR FINISHES—(continued)	
Ceramic or quarry tile ($^3/_4$-inch) on 2-inch mortar bed	16
Ceramic or quarry tile ($^3/_4$-inch) on 1-inch mortar bed	23
Concrete fill finish (per inch thickness)	12
Hardwood flooring, $^7/_8$-inch	4
Linoleum or asphalt tile, $^1/_4$-inch	1
Marble and mortar on stone-concrete fill	33
Slate (per inch thickness)	15
Solid flat tile on 1-inch mortar base	23
Subflooring, $^3/_4$-inch	3
Terrazzo (12-inch) directly on slab	19
Terrazzo (1-inch) on stone-concrete fill	32
Terrazzo (1-inch) 2-inch stone concrete	32
Wood block (3-inch) on mastic, no fill	10
Wood block (3-inch) on 2-inch mortar base	16

FLOORS, WOOD-JOIST (NO PLASTER) DOUBLE WOOD FLOOR

Joint Sizes (inches)	12-in. Spacing (lb./ft.^{2})	16-in. Spacing (lb./ft.^{2})	24-in. Spacing (lb./ft.^{2})
2 × 6	6	5	5
2 × 8	6	6	5
2 × 10	7	6	6
2 × 12	8	7	6

Dead Loads

Clay tile (for mortar add 10 lb.)	
Book tile, 2-inch	12
Book tile, 3-inch	20
Ludowici	10
Roman	12
Spanish	19
Composition:	
Three-ply ready roofing	1
Four-ply felt and gravel	5.5
Five-ply felt and gravel	6
Copper or tin	1
Corrugated asbestos-cement roofing	4
Deck, metal, 20 gage	2.5
Deck, metal, 18 gage	3
Decking, 2-inch wood (Douglas fir)	5
Decking, 3-inch wood (Douglas fir)	8
Fiberboard, 2-inch	0.75
Gypsum sheathing, 2-inch	2
Insulation, roof boards (per inch thickness)	
Cellular glass	0.7
Fibrous glass	1.1
Fiberboard	1.5
Perlite	0.8
Polystyrene foam	0.2

FLOORS, WOOD-JOIST (NO PLASTER) DOUBLE WOOD FLOOR			
Joint Sizes (inches)	12-in. Spacing (lb./ft.^{2})	16-in. Spacing (lb./ft.^{2})	24-in. Spacing (lb./ft.^{2})
2 × 6	6	5	5
2 × 8	6	6	5
2 × 10	7	6	6
2 × 12	8	7	6
FRAME PARTITIONS			
Moveable steel partitions			4
Wood or steel studs, 2-inch gypsum board each side			8
Wood studs, 2 × 4, unplastered			4
Wood studs, 2 × 4, plastered one side			12
Wood studs, 2 × 4, plastered two sides			20
FRAME WALLS			
Exterior stud walls:			
2 × 4 @ 16 inches, $^5/_8$-inch gypsum insulated, $^3/_8$-inch siding			11
2 × 6 @ 16 inches, $^5/_8$-inch gypsum insulated, $^3/_8$-inch siding			12
Exterior stud walls, with brick veneer			48
Windows, glass, frame and sash			8

Dead Loads

Urethane foam with skin	0.5
Plywood (per $^1/_8$-inch thickness)	0.4
Rigid insulation, 2-inch	0.75
Skylight, metal frame, $^3/_8$-inch wired glass	8
Slate, $^3/_{16}$-inch	7
Slate, $^1/_4$-inch	10
Waterproofing membranes	
Bituminous, gravel-covered	5.5
Bituminous, smooth surface	1.5
Liquid applied	1.0
Single-ply, sheet	0.7
Wood sheathing (per 1-inch thickness)	3
Wood shingles	3
FLOORS AND FLOOR FINISHES	
Asphalt block (2-inch), 2-inch mortar	30
Cement finish (1-inch) on stone-concrete fill	32

(continued)

MASONRY PARTITIONS AND WALLS	
Clay tile:	
4-inch	18
6-inch	24
8-inch	24
Concrete block, heavy aggregate:	
4-inch	30
6-inch	42
8-inch	55
12-inch	85
Concrete block, light aggregate:	
4-inch	20
6-inch	28
8-inch	38
12-inch	55

For SI: 1 psf = 0.0479 kN/m^2, 1 inch = 25.4 mm, 1 pound = 0.4536 kg, 1 psf = 4.882 kg/m^2.

NOTE: Weights of masonry include mortar but not plaster. For plaster add 5 lbs./ft.^{2} for each inch of plaster. Values given represent averages. In some cases there is a considerable range of weight for the same construction.

Live Loads

- Definition

[B] LIVE LOADS. Those loads produced by the use and occupancy of the building or other structure and do not include construction or environmental loads such as wind load, snow load, rain load, earthquake load, flood load or dead load.

Live Loads

- Commentary

- A variety of loads are imposed on a structure that must be considered in the building design. One group is live loads, produced through the use of the building. Different types of uses or occupancies result in different live loads, due primarily to the number of people involved, the type of activity that takes place and the movable furnishings and equipment that are typically a part of the use.

  Design loads that are not live loads include environmental loads such as wind loads, snow loads, rain loads, earthquake loads and flood loads, as well as construction loads. Fixed-in-place equipment is a dead load rather than a live load.

Live Loads in IRC

TABLE R301.5
MINIMUM UNIFORMLY DISTRIBUTED LIVE LOADS
(in pounds per square foot)

USE	LIVE LOAD
Attics with storage[b]	20
Attics without storage[b]	10
Decks[e]	40
Exterior balconies	60
Fire escapes	40
Guardrails and handrails[d]	200
Guardrails in-fill components[f]	50
Passenger vehicle garages[a]	50[a]
Rooms other than sleeping rooms	40
Sleeping rooms	30
Stairs	40[c]

For SI: 1 pound per square foot = 0.0479 kN/m^2, 1 square inch = 645 mm^2, 1 pound = 4.45 N.

a. Elevated garage floors shall be capable of supporting a 2,000-pound load applied over a 20-square-inch area.

b. No storage with roof slope not over 3 units in 12 units.

c. Individual stair treads shall be designed for the uniformly distributed live load or a 300-pound concentrated load acting over an area of 4 square inches, whichever produces the greater stresses.

d. A single concentrated load applied in any direction at any point along the top.

e. See Section R502.2.1 for decks attached to exterior walls.

f. Guard in-fill components (all those except the handrail), balusters and panel fillers shall be designed to withstand a horizontally applied normal load of 50 pounds on an area equal to 1 square foot. This load need not be assumed to act concurrently with any other live load requirement.

Roof Load = Snow Load in CT

R301.6 Roof load. Roofs shall be designed for the 30 pound snow load indicated in Table R301.2(1).

TABLE R301.2(1)
CLIMATIC AND GEOGRAPHIC DESIGN CRITERIA

GROUND SNOW LOAD	WIND SPEED[b] (mph)	SEISMIC DESIGN CATEGORY	SUBJECT TO DAMAGE FROM				WINTER DESIGN TEMP	ICE SHIELD UNDER-LAYMENT REQUIRED	FLOOD HAZARDS	AIR FREEZING INDEX	MEAN ANNUAL TEMP
			Weathering[a]	Frost line depth	Termite	Decay					
30	Appendix M	All locations: B	Severe	42 inches	Moderate to heavy	Slight to moderate	7°F	Yes	To be determined locally	1,500 or less	50°F

For SI: 1 pound per square foot = 0.0479 kPa, 1 mile per hour = 0.447 m/s.

a. Weathering may require a higher strength concrete or grade of masonry than necessary to satisfy the structural requirements of this code.

b. Wind exposure category shall be determined on a site-specific basis in accordance with Section R301.2.1.4.

Deflection

R301.7 Deflection. The allowable deflection of any structural member under the live load listed in Sections R301.5 and R301.6 shall not exceed the values in Table R301.7.

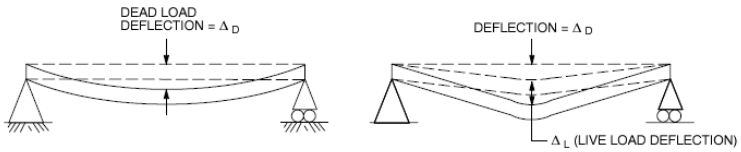

Figure R301.7
BEAM DEFLECTION

Deflection

TABLE R301.7
ALLOWABLE DEFLECTION OF STRUCTURAL MEMBERS[a,b,c]

STRUCTURAL MEMBER	ALLOWABLE DEFLECTION
Rafters having slopes greater than 3/12 with no finished ceiling attached to rafters	L/180
Interior walls and partitions	H/180
Floors and plastered ceilings	L/360
All other structural members	L/240
Exterior walls with plaster or stucco finish	H/360
Exterior walls—wind loads[a] with brittle finishes	L/240
Exterior walls—wind loads[a] with flexible finishes	L/120

Note: L = span length, H = span height.

a. The wind load shall be permitted to be taken as 0.7 times the Component and Cladding loads for the purpose of the determining deflection limits herein.

b. For cantilever members, L shall be taken as twice the length of the cantilever.

c. For aluminum structural members or panels used in roofs or walls of sunroom additions or patio covers, not supporting edge of glass or sandwich panels, the total load deflection shall not exceed L/60. For sandwich panels used in roofs or walls of sunroom additions or patio covers, the total load deflection shall not exceed L/120.

Framing Members

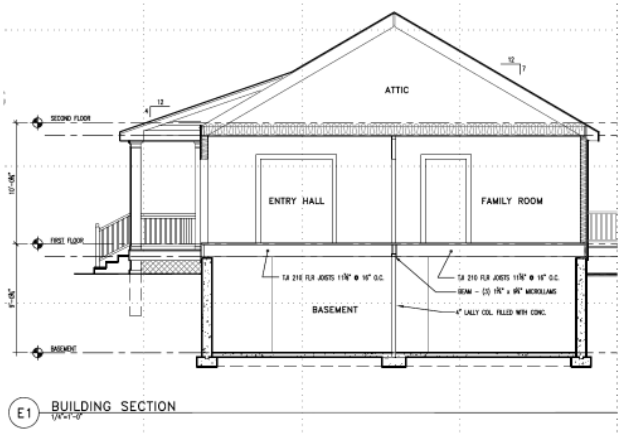

Framing Members

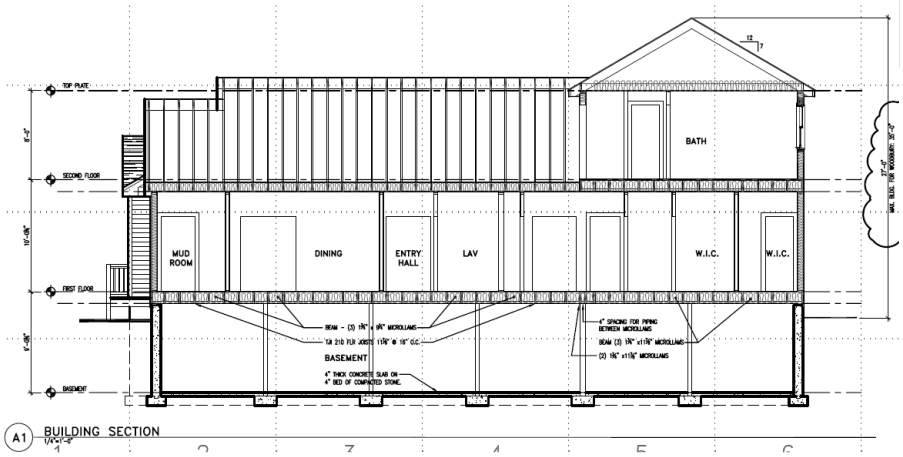

Framing Members

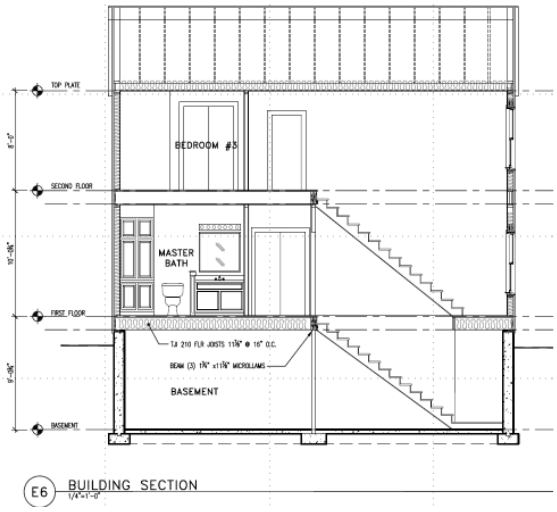

Joists

R502.3 Allowable joist spans. Spans for floor joists shall be in accordance with Tables R502.3.1(1) and R502.3.1(2). For other grades and species and for other loading conditions, refer to the AF&PA Span Tables for Joists and Rafters.

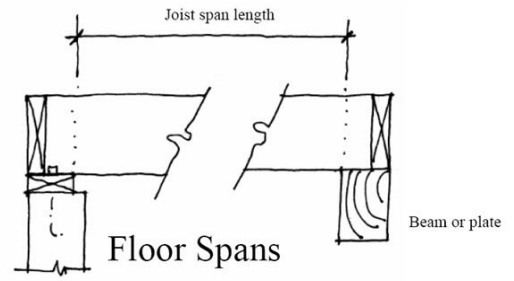

Joists – Sleeping areas

TABLE R502.3.1(1)
FLOOR JOIST SPANS FOR COMMON LUMBER SPECIES
(Residential sleeping areas, live load = 30 psf, L/Δ = 360)

JOIST SPACING (inches)	SPECIES AND GRADE		DEAD LOAD = 10 psf				DEAD LOAD = 20 psf			
			2×6	2×8	2×10	2×12	2×6	2×8	2×10	2×12
			Maximum floor joist spans							
			(ft.- in.)	(ft.- in.)	(ft.- in.)	(ft.- in.)	(ft.- in.)	(ft.- in.)	(ft.- in.)	(ft.- in.)
16	Douglas fir-larch	SS	11- 4	15- 0	19- 1	23- 3	11- 4	15- 0	19- 1	23- 0
	Douglas fir-larch	#1	10-11	14- 5	18- 5	21- 4	10- 8	13- 6	16- 5	19- 1
	Douglas fir-larch	#2	10- 9	14- 1	17- 2	19-11	9-11	12- 7	15- 5	17-10
	Douglas fir-larch	#3	8- 5	10- 8	13- 0	15- 1	7- 6	9- 6	11- 8	13- 6
	Hem-fir	SS	10- 9	14- 2	18- 0	21-11	10- 9	14- 2	18- 0	21-11
	Hem-fir	#1	10- 6	13-10	17- 8	20- 9	10- 4	13- 1	16- 0	18- 7
	Hem-fir	#2	10- 0	13- 2	16-10	19- 8	9-10	12- 5	15- 2	17- 7
	Hem-fir	#3	8- 5	10- 8	13- 0	15- 1	7- 6	9- 6	11- 8	13- 6
	Southern pine	SS	11- 2	14- 8	18- 9	22-10	11- 2	14- 8	18- 9	22-10
	Southern pine	#1	10-11	14- 5	18- 5	22- 5	10-11	14- 5	17-11	21- 4
	Southern pine	#2	10- 9	14- 2	18- 0	21- 1	10- 5	13- 6	16- 1	18-10
	Southern pine	#3	9- 0	11- 6	13- 7	16- 2	8- 1	10- 3	12- 2	14- 6
	Spruce-pine-fir	SS	10- 6	13-10	17- 8	21- 6	10- 6	13-10	17- 8	21- 4
	Spruce-pine-fir	#1	10- 3	13- 6	17- 2	19-11	9-11	12- 7	15- 5	17-10
	Spruce-pine-fir	#2	10- 3	13- 6	17- 2	19-11	9-11	12- 7	15- 5	17-10
	Spruce-pine-fir	#3	8- 5	10- 8	13- 0	15- 1	7- 6	9- 6	11- 8	13- 6

Joists – Sleeping areas

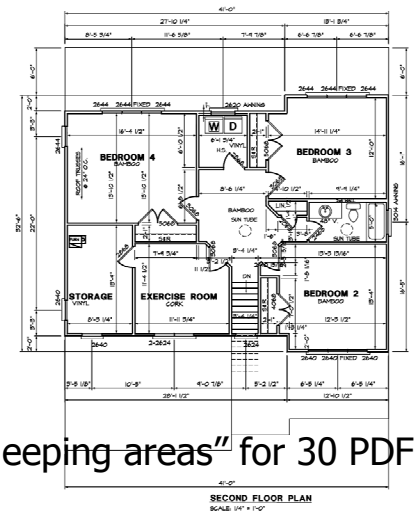

What are the "sleeping areas" for 30 PDF LL?

Joists – Species & grade

- Excerpt from supplier's website:
  - *{Company} stocks dimensional framing lumber exclusively in Douglas fir, the strongest and most stable species on the market. The quality of this lumber is #2 or better, making {Company} the top choice for dependable framing lumber.*
  - *Green Douglas Fir • #2 & Better • Premium Quality*

Joists – Species & grade

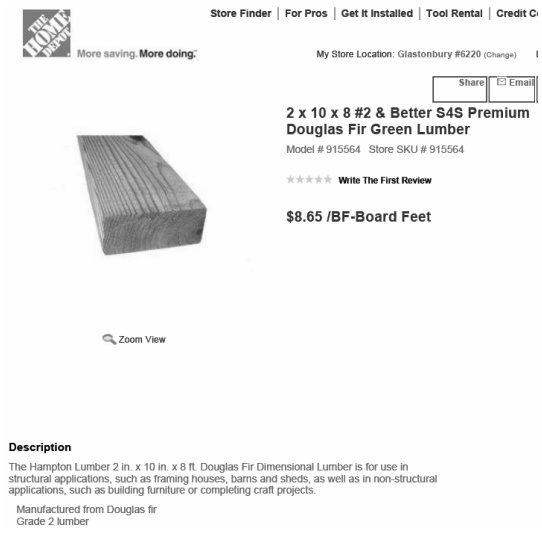

Joists – Species & grade

- What is **Douglas Fir – Larch** on span tables?
  - "Douglas Fir lumber products are identified by region. Products from trees growing west of the Cascade Crest to the Pacific Ocean, the most abundant region for Douglas Fir, are simply identified as "DF" on the grade stamp. East of the Cascades, Western Larch grows intermixed with Douglas Fir. The two species are often kept separate in appearance grade products but are combined in Dimension products and marketed as "DF-L". Because ***Douglas Fir and Western Larch share nearly identical structural characteristics and physical working properties, the two species are interchangeable*** in Dimension products." *[copied from WWPA website]*

Joists – Species & grade

- What is **Hem-Fir** on span tables?
  - "Hem-Fir is a species combination of Western Hemlock and five of the True Firs: California Red Fir, Grand Fir , Noble Fir , Pacific Silver Fir , and White Fir. While Western Hemlock and the True Firs are sometimes marketed separately in products graded for appearance, **these species share similar design values making products graded for structural applications interchangeable**. The Hem-Fir species combination is one of the most important in the Western region, second only to the Douglas Fir-Larch species group in terms of abundance, production volumes, strength, and versatility in end use." *[copied from WWPA website]*

Joists – Species & grade

SPIB Issues New Design Values
Effective June 1, 2012
for Only No.2 and Lower Grades
2"-4" thick and 2"-4" wide

January 31, 2012

The Southern Pine Inspection Bureau (SPIB) has issued Supplement No. 9 to SPIB's 2002 Standard Grading Rules for Southern Pine Lumber providing new designvalues effective June 1, 2012. The ***only*** *design values that will change on June 1 apply to visually graded Southern Pine and Mixed Southern Pine sized 2" to 4" wide and 2" to 4" thick (2x2s through 4x4s) in No.2 and lower grades (No.2, No.3, Stud, Construction, Standard and Utility). New design values for No.2 Dense and No.2 NonDense, pending approval by the Board of Review of the American Lumber Standard Committee (ALSC), will also become effective June 1, 2012.*

Design values for all other grades and sizes of visually graded Southern Pine remain the same, pending results of testing scheduled for completion later in 2012.

NOTE: *The design value pages on this website are updated as new information becomes available. Check frequently for updates.* [www.southernpine.com]

Joists – Species & grade

Spruce-pine-fir refers to Canadian woods of *similar characteristics* that have been grouped for production and marketing. SPF species have moderate strength, are worked easily, take paint readily, and hold nails well. They are white to pale yellow in color. There are two types of SPF woods:

- Eastern Canada (Saskatchewan and east), comprising timber from the Red Spruce, Black Spruce, Jack Pine, and Balsam Fir species.
- Western Canada (British Columbia and Alberta), comprising timber from the White Spruce, Engelmann Spruce, Lodgepole Pine, and Alpine fir, species.

Joists – Dead Load 20/10/?

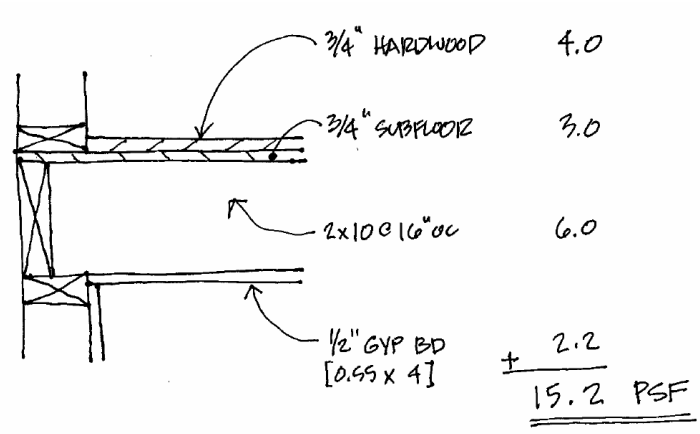

Joists – Dead load

- Granite countertops
  - ¾″ = 13 PSF
  - 1-1/4″ = 18-20 PSF
  - 2″ = 30 PSF

Joists – Dead load

- Tub – 450 LBS
- Water – 420 LBS
- DL – 109 PSF

Joists – Living areas

TABLE R502.3.1(2)
FLOOR JOIST SPANS FOR COMMON LUMBER SPECIES
(Residential living areas, live load = 40 psf, L/Δ = 360)

JOIST SPACING (inches)	SPECIES AND GRADE		DEAD LOAD = 10 psf				DEAD LOAD = 20 psf			
			2×6	2×8	2×10	2×12	2×6	2×8	2×10	2×12
			Maximum floor joist spans							
			(ft.- in.)	(ft.- in.)	(ft.- in.)	(ft.- in.)	(ft.- in.)	(ft.- in.)	(ft.- in.)	(ft.- in.)
16	Douglas fir-larch	SS	10- 4	13- 7	17- 4	21- 1	10- 4	13- 7	17- 4	21- 0
	Douglas fir-larch	#1	9-11	13- 1	16- 5	19- 1	9- 8	12- 4	15- 0	17- 5
	Douglas fir-larch	#2	9- 9	12- 7	15- 5	17-10	9- 1	11- 6	14- 1	16- 3
	Douglas fir-larch	#3	7- 6	9- 6	11- 8	13- 6	6-10	8- 8	10- 7	12- 4
	Hem-fir	SS	9- 9	12-10	16- 5	19-11	9- 9	12-10	16- 5	19-11
	Hem-fir	#1	9- 6	12- 7	16- 0	18- 7	9- 6	12- 0	14- 8	17- 0
	Hem-fir	#2	9- 1	12- 0	15- 2	17- 7	8-11	11- 4	13-10	16- 1
	Hem-fir	#3	7- 6	9- 6	11- 8	13- 6	6-10	8- 8	10- 7	12- 4
	Southern pine	SS	10- 2	13- 4	17- 0	20- 9	10- 2	13- 4	17- 0	20- 9
	Southern pine	#1	9-11	13- 1	16- 9	20- 4	9-11	13- 1	16- 4	19- 6
	Southern pine	#2	9- 9	12-10	16- 1	18-10	9- 6	12- 4	14- 8	17- 2
	Southern pine	#3	8- 1	10- 3	12- 2	14- 6	7- 4	9- 5	11- 1	13- 2
	Spruce-pine-fir	SS	9- 6	12- 7	16- 0	19- 6	9- 6	12- 7	16- 0	19- 6
	Spruce-pine-fir	#1	9- 4	12- 3	15- 5	17-10	9- 1	11- 6	14- 1	16- 3
	Spruce-pine-fir	#2	9- 4	12- 3	15- 5	17-10	9- 1	11- 6	14- 1	16- 3
	Spruce-pine-fir	#3	7- 6	9- 6	11- 8	13- 6	6-10	8- 8	10- 7	12- 4

I-Joists

TrusJoist™
ENGINEERED WOOD PRODUCTS

L/480 Live Load Deflection

Depth	TJI®	40 PSF Live Load / 10 PSF Dead Load				40 PSF Live Load / 20 PSF Dead Load			
		12" o.c.	16" o.c.	19.2" o.c.	24" o.c.	12" o.c.	16" o.c.	19.2" o.c.	24" o.c.
9½"	110	16'-11"	15'-6"	14'-7"	13'-7"	16'-11"	15'-6"	14'-3"	12'-9"
	210	17'-9"	16'-3"	15'-4"	14'-3"	17'-9"	16'-3"	15'-4"	14'-0"
	230	18'-3"	16'-8"	15'-9"	14'-8"	18'-3"	16'-8"	15'-9"	14'-8"
11⅞"	110	20'-2"	18'-5"	17'-4"	15'-9"(1)	20'-2"	17'-8"	16'-1"(1)	14'-4"(1)
	210	21'-1"	19'-3"	18'-2"	16'-11"	21'-1"	19'-3"	17'-8"	15'-9"(1)
	230	21'-8"	19'-10"	18'-8"	17'-5"	21'-8"	19'-10"	18'-7"	16'-7"(1)
	360	22'-11"	20'-11"	19'-8"	18'-4"	22'-11"	20'-11"	19'-8"	17'-10"(1)
	560	26'-1"	23'-8"	22'-4"	20'-9"	26'-1"	23'-8"	22'-4"	20'-9"(1)
14"	110	22'-10"	20'-11"	19'-2"	17'-2"(1)	22'-2"	19'-2"	17'-6"(1)	15'-0"(1)
	210	23'-11"	21'-10"	20'-8"	18'-10"(1)	23'-11"	21'-1"	19'-2"(1)	16'-7"(1)
	230	24'-8"	22'-6"	21'-2"	19'-9"(1)	24'-8"	22'-2"	20'-3"(1)	17'-6"(1)
	360	26'-0"	23'-8"	22'-4"	20'-9"(1)	26'-0"	23'-8"	22'-4"(1)	17'-10"(1)
	560	29'-6"	26'-10"	25'-4"	23'-6"	***29'-6"***	***26'-10"***	25'-4"(1)	20'-11"(1)
16"	210	26'-6"	24'-3"	22'-6"(1)	19'-11"(1)	26'-0"	22'-6"(1)	20'-7"(1)	16'-7"(1)
	230	27'-3"	24'-10"	23'-6"	21'-1"(1)	***27'-3"***	23'-9"	21'-8"(1)	17'-6"(1)
	360	28'-9"	26'-3"	24'-8"(1)	21'-5"(1)	***28'-9"***	26'-3"(1)	22'-4"(1)	17'-10"(1)
	560	32'-8"	29'-8"	28'-0"	25'-2"(1)	***32'-8"***	***29'-8"***	26'-3"(1)	20'-11"(1)

L/360 Live Load Deflection (Minimum Criteria per Code)

Depth	TJI®	40 PSF Live Load / 10 PSF Dead Load				40 PSF Live Load / 20 PSF Dead Load			
		12" o.c.	16" o.c.	19.2" o.c.	24" o.c.	12" o.c.	16" o.c.	19.2" o.c.	24" o.c.
9½"	110	18'-9"	17'-2"	15'-8"	14'-0"	18'-1"	15'-8"	14'-3"	12'-9"
	210	19'-8"	18'-0"	17'-0"	15'-4"	19'-8"	17'-2"	15'-8"	14'-0"
	230	20'-3"	18'-6"	17'-5"	16'-2"	***20'-3"***	18'-1"	16'-6"	14'-9"
11⅞"	110	22'-3"	19'-4"	17'-8"	15'-9"(1)	20'-5"	17'-8"	16'-1"(1)	14'-4"(1)
	210	23'-4"	21'-2"	19'-4"	17'-3"(1)	***22'-4"***	19'-4"	17'-8"	15'-9"(1)
	230	24'-0"	21'-11"	20'-5"	18'-3"	***23'-7"***	20'-5"	18'-7"	16'-7"(1)
	360	25'-4"	23'-2"	21'-10"	20'-4"(1)	***25'-4"***	***23'-2"***	***21'-10"(1)***	17'-10"(1)
	560	28'-10"	26'-3"	24'-9"	23'-0"	***28'-10"***	***26'-3"***	***24'-9"***	20'-11"(1)
14"	110	24'-4"	21'-0"	19'-2"	17'-2"(1)	22'-2"	19'-2"	17'-6"(1)	15'-0"(1)
	210	26'-6"	23'-1"	21'-1"	18'-10"(1)	24'-4"	21'-1"	19'-2"(1)	16'-7"(1)
	230	27'-3"	24'-4"	22'-2"	19'-10"(1)	***25'-8"***	22'-2"	20'-3"(1)	17'-6"(1)
	360	28'-9"	26'-3"	24'-9"(1)	21'-5"(1)	***28'-9"***	***26'-3"(1)***	22'-4"(1)	17'-10"(1)
	560	32'-8"	29'-9"	28'-0"	25'-2"(1)	***32'-8"***	***29'-9"***	***26'-3"(1)***	20'-11"(1)
16"	210	28'-6"	24'-8"	22'-6"(1)	19'-11"(1)	26'-0"	22'-6"(1)	20'-7"(1)	16'-7"(1)
	230	30'-1"	26'-0"	23'-9"	21'-1"(1)	***27'-5"***	23'-9"	21'-8"(1)	17'-6"(1)
	360	31'-10"	29'-0"	26'-10"(1)	21'-5"(1)	***31'-10"***	***26'-10"(1)***	22'-4"(1)	17'-10"(1)
	560	36'-1"	32'-11"	31'-0"(1)	25'-2"(1)	***36'-1"***	***31'-6"(1)***	26'-3"(1)	20'-11"(1)

I-Joists

LP BUILDING PRODUCTS
SOLIDSTART®
ENGINEERED WOOD PRODUCTS

SIMPLE SPAN

Series	Depth	L/480				L/360			
		12" oc	16" oc	19.2" oc	24" oc	12" oc	16" oc	19.2" oc	24" oc
LPI 18	9-1/2"	16'-6"	15'-1"	14'-3"	13'-4"	18'-3"	16'-8"	15'-3"	13'-7"
	11-7/8"	19'-9"	18'-1"	17'-1"	15'-7"	21'-10"	19'-1"	17'-5"	15'-7"
	14"	22'-6"	20'-7"	19'-1"	17'-1"	24'-3"	21'-0"	19'-1"	17'-1"
LPI 20Plus	9-1/2"	17'-9"	16'-2"	15'-3"	14'-3"	19'-7"	17'-11"	16'-7"	14'-10"
	11-7/8"	21'-2"	19'-4"	18'-3"	17'-0"	23'-5"	21'-1"	19'-3"	17'-2"
	14"	24'-1"	22'-0"	20'-9"	18'-7"	26'-4"	22'-10"	20'-10"	18'-7"
	16"	26'-9"	24'-5"	22'-4"	19'-7"	28'-3"	24'-5"	22'-4"	19'-7"
LPI 32Plus	9-1/2"	18'-9"	17'-0"	16'-0"	14'-9"	20'-10"	18'-11"	17'-10"	16'-6"
	11-7/8"	22'-3"	20'-2"	19'-0"	17'-7"	24'-9"	22'-6"	21'-2"	19'-2"
	14"	25'-2"	22'-10"	21'-6"	19'-6"	28'-0"	25'-5"	23'-7"	19'-6"
	16"	27'-10"	25'-3"	23'-9"	19'-7"	30'-11"	27'-10"	24'-7"	19'-7"
LPI 36	11-7/8"	23'-1"	21'-1"	19'-10"	18'-6"	25'-5"	23'-4"	22'-0"	20'-6"
	14"	26'-2"	23'-10"	22'-6"	20'-11"	28'-11"	26'-5"	24'-11"	23'-2"
	16"	28'-10"	26'-3"	24'-10"	23'-1"	31'-11"	29'-1"	27'-6"	23'-8"
LPI 42Plus	9-1/2"	20'-10"	19'-0"	17'-11"	16'-8"	23'-1"	21'-1"	19'-11"	18'-6"
	11-7/8"	24'-11"	22'-8"	21'-4"	19'-10"	27'-6"	25'-1"	23'-8"	22'-0"
	14"	28'-3"	25'-9"	24'-3"	22'-6"	31'-3"	28'-6"	26'-10"	25'-0"
	16"	31'-4"	28'-6"	26'-10"	25'-0"	34'-7"	31'-7"	29'-9"	26'-1"
LPI 52Plus	11-7/8"	25'-9"	23'-5"	22'-1"	20'-7"	28'-5"	25'-11"	24'-6"	22'-10"
	14"	29'-2"	26'-7"	25'-0"	23'-4"	32'-3"	29'-5"	27'-9"	25'-10"
	16"	32'-3"	29'-4"	27'-8"	25'-9"	35'-7"	32'-6"	30'-8"	27'-9"
LPI 56	11-7/8"	26'-5"	24'-1"	22'-8"	21'-1"	29'-3"	26'-8"	25'-2"	23'-5"
	14"	29'-11"	27'-3"	25'-8"	23'-10"	33'-1"	30'-2"	28'-5"	26'-5"
	16"	33'-0"	30'-1"	28'-4"	26'-4"	36'-6"	33'-3"	31'-4"	26'-7"

I-Joists

- Commentary

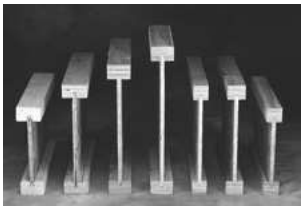

R502.1.4 Prefabricated wood I-joists. Structural capacities and design provisions for prefabricated wood I-joists shall be established and monitored in accordance with ASTM D 5055.

- Prefabricated wood I-joists are some of the many engineered wood products currently available. These structural members consist of sawn lumber of structural composite lumber flanges bonded to wood structural panel webs, forming an I-shaped cross section. Since these products are widely used in residential floor construction ASTM D 5055, *Standard Specification for Establishing and Monitoring Structural Capacities of Prefabricated Wood I-joists* is referenced as the appropriate standard.

  This standard does not specify the makeup of the component materials or how they must be assembled. Each manufacturer must develop product specifications and construction details for its products. These are subject to qualification tests, which are conducted or witnessed by qualified, independent agencies. The best results are used to establish the following design values:
  - Allowable bending moment.
  - Allowable shear.
  - Member stiffness (EI).
  - Sheer deflection factor (K).
  - Allowable reactions.
  - Bearing length requirements.
  - Web stiffener requirements.
  - A chart detailing the size, location, shape and spacing of any holes permitted in the web.

Floor cantilevers

R502.3.3 Floor cantilevers. Floor cantilever spans shall not exceed the nominal depth of the wood floor joist. Floor cantilevers constructed in accordance with Table R502.3.3(1) shall be permitted when supporting a light-frame bearing wall and roof only. Floor cantilevers supporting an exterior balcony are permitted to be constructed in accordance with Table R502.3.3(2).

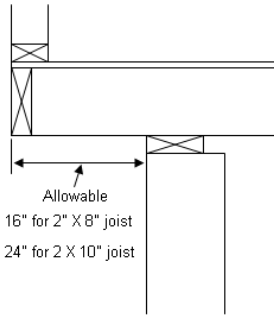

Floor cantilevers

TABLE R502.3.3(1)
CANTILEVER SPANS FOR FLOOR JOISTS SUPPORTING LIGHT-FRAME EXTERIOR BEARING WALL AND ROOF ONLY[a, b, c, f, g, h]
(Floor Live Load ≤ 40 psf, Roof Live Load ≤ 20 psf)

Member & Spacing	Maximum Cantilever Span (Uplift Force at Backspan Support in Lbs.)[d, e]											
	Ground Snow Load											
	≤ 20 psf			30 psf			50 psf			70 psf		
	Roof Width			Roof Width			Roof Width			Roof Width		
	24 ft.	32 ft.	40 ft.	24 ft.	32 ft.	40 ft.	24 ft.	32 ft.	40 ft.	24 ft.	32 ft.	40 ft.
2 × 8 @ 12″	20″ (177)	15″ (227)	—	18″ (209)	—	—	—	—	—	—	—	—
2 × 10 @ 16″	29″ (228)	21″ (297)	16″ (364)	26″ (271)	18″ (354)	—	20″ (375)	—	—	—	—	—

TABLE R502.3.3(2)
CANTILEVER SPANS FOR FLOOR JOISTS SUPPORTING EXTERIOR BALCONY[a, b, e, f]

Member Size	Spacing	Maximum Cantilever Span (Uplift Force at Backspan Support in Lbs.)[c, d]		
		Ground Snow Load		
		≤ 30 psf	50 psf	70 psf
2 × 8	12″	42″ (139)	39″ (156)	34″ (165)
2 × 8	16″	36″ (151)	34″ (171)	29″ (180)
2 × 10	12″	61″ (164)	57″ (189)	49″ (201)
2 × 10	16″	53″ (180)	49″ (208)	42″ (220)

Joists under bearing partitions

R502.4 Joists under bearing partitions. Joists under parallel bearing partitions shall be of adequate size to support the load. Double joists, sized to adequately support the load, that are separated to permit the installation of piping or vents shall be full depth solid blocked with lumber not less than 2 inches (51 mm) in nominal thickness spaced not more than 4 feet (1219 mm) on center. Bearing partitions perpendicular to joists shall not be offset from supporting girders, walls or partitions more than the joist depth unless such joists are of sufficient size to carry the additional load.

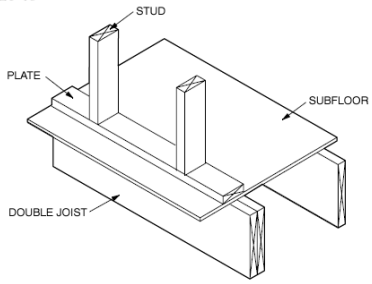

Figure R502.4(1)
DOUBLE JOIST UNDER BEARING PARTITION

Joists under bearing partitions

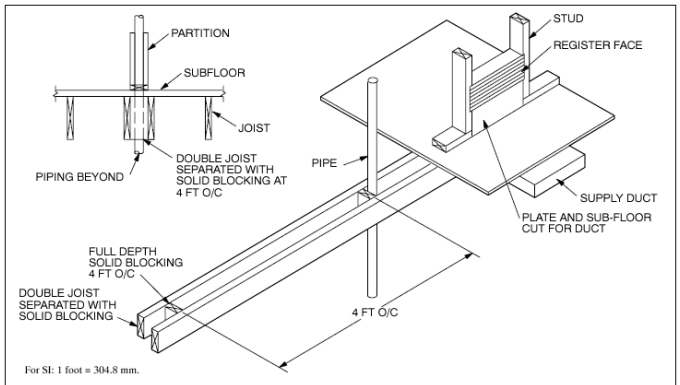

Figure R502.4(2)
SPACED JOISTS UNDER BEARING PARTITION WITH BLOCKING AT PENETRATION

Girders / Headers / Beams

R502.5 Allowable girder spans. The allowable spans of girders fabricated of dimension lumber shall not exceed the values set forth in Tables R502.5(1) and R502.5(2).

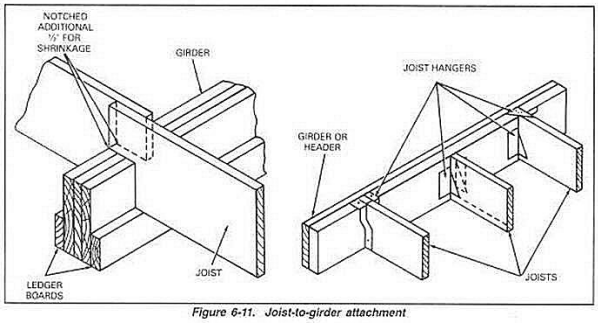

Figure 6-11. Joist-to-girder attachment

Girders

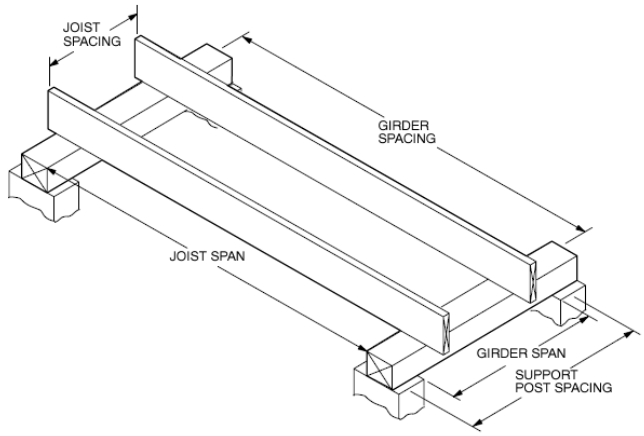

Figure R502.5(1)
GIRDER SPAN-SPACING RELATIONSHIP

Exterior Girders & Headers

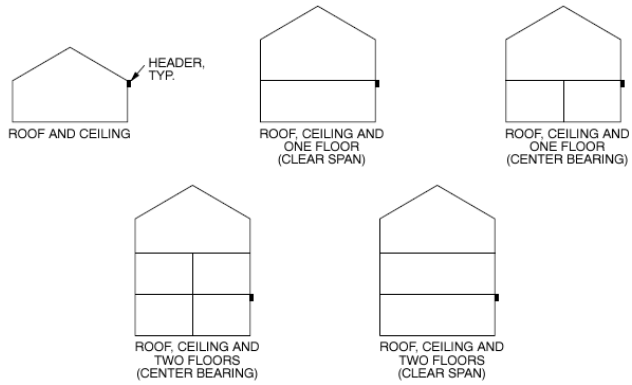

SOURCE: AF&PA WOOD FRAME CONSTRUCTION MANUAL FOR ONE- AND TWO-FAMILY DWELLINGS, 1995 SBC HIGH WIND EDITION

Figure R502.5(2)
HEADER SPANS FOR EXTERIOR LOAD BEARING WALLS

Girders

TABLE R502.5(1)
GIRDER SPANS[a] AND HEADER SPANS[a] FOR EXTERIOR BEARING WALLS
(Maximum spans for Douglas fir-larch, hem-fir, southern pine and spruce-pine-fir[b] and required number of jack studs)

GIRDERS AND HEADERS SUPPORTING	SIZE	GROUND SNOW LOAD (psf)[e]											
		30						50					
		Building width[c] (feet)											
		20		28		36		20		28		36	
		Span	NJ[d]	Span	NJ[d]	Span	NJ[d]	Span	NJ[d]	Span	NJ[d]	Span	NJ[d]
Roof and ceiling	2-2×4	3-6	1	3-2	1	2-10	1	3-2	1	2-9	1	2-6	1
	2-2×6	5-5	1	4-8	1	4-2	1	4-8	1	4-1	1	3-8	2
	2-2×8	6-10	1	5-11	2	5-4	2	5-11	2	5-2	2	4-7	2
	2-2×10	8-5	2	7-3	2	6-6	2	7-3	2	6-3	2	5-7	2
	2-2×12	9-9	2	8-5	2	7-6	2	8-5	2	7-3	2	6-6	2
	3-2×8	8-4	1	7-5	1	6-8	1	7-5	1	6-5	2	5-9	2
	3-2×10	10-6	1	9-1	2	8-2	2	9-1	2	7-10	2	7-0	2
	3-2×12	12-2	2	10-7	2	9-5	2	10-7	2	9-2	2	8-2	2
	4-2×8	7-0	1	6-1	2	5-5	2	6-1	2	5-3	2	4-8	2
	4-2×10	11-8	1	10-6	1	9-5	2	10-6	1	9-1	2	8-2	2
	4-2×12	14-1	1	12-2	2	10-11	2	12-2	2	10-7	2	9-5	2
Roof, ceiling and one center-bearing floor	2-2×4	3-1	1	2-9	1	2-5	1	2-9	1	2-5	1	2-2	1
	2-2×6	4-6	1	4-0	1	3-7	2	4-1	1	3-7	2	3-3	2
	2-2×8	5-9	2	5-0	2	4-6	2	5-2	2	4-6	2	4-1	2
	2-2×10	7-0	2	6-2	2	5-6	2	6-4	2	5-6	2	5-0	2
	2-2×12	8-1	2	7-1	2	6-5	2	7-4	2	6-5	2	5-9	3
	3-2×8	7-2	1	6-3	2	5-8	2	6-5	2	5-8	2	5-1	2
	3-2×10	8-9	2	7-8	2	6-11	2	7-11	2	6-11	2	6-3	2
	3-2×12	10-2	2	8-11	2	8-0	2	9-2	2	8-0	2	7-3	2

Interior Girders & Headers

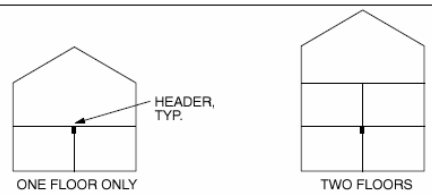

SOURCE: AF&PA WOOD FRAME CONSTRUCTION MANUAL FOR ONE- AND TWO-FAMILY DWELLINGS, 1995 SBC HIGH WIND EDITION

Figure R502.5(3)
HEADER SPANS FOR INTERIOR LOAD BEARING WALLS

Girders

TABLE R502.5(2)
GIRDER SPANS[a] AND HEADER SPANS[a] FOR INTERIOR BEARING WALLS
(Maximum spans for Douglas fir-larch, hem-fir, southern pine and spruce-pine-fir[b] and required number of jack studs)

HEADERS AND GIRDERS SUPPORTING	SIZE	BUILDING WIDTH[c] (feet)					
		20		28		36	
		Span	NJ[d]	Span	NJ[d]	Span	NJ[d]
One floor only	2-2×4	3-1	1	2-8	1	2-5	1
	2-2×6	4-6	1	3-11	1	3-6	1
	2-2×8	5-9	1	5-0	2	4-5	2
	2-2×10	7-0	2	6-1	2	5-5	2
	2-2×12	8-1	2	7-0	2	6-3	2
	3-2×8	7-2	1	6-3	1	5-7	2
	3-2×10	8-9	1	7-7	2	6-9	2
	3-2×12	10-2	2	8-10	2	7-10	2
	4-2×8	9-0	1	7-8	1	6-9	1
	4-2×10	10-1	1	8-9	1	7-10	2
	4-2×12	11-9	1	10-2	2	9-1	2
Two floors	2-2×4	2-2	1	1-10	1	1-7	1
	2-2×6	3-2	2	2-9	2	2-5	2
	2-2×8	4-1	2	3-6	2	3-2	2
	2-2×10	4-11	2	4-3	2	3-10	3
	2-2×12	5-9	2	5-0	3	4-5	3
	3-2×8	5-1	2	4-5	2	3-11	2
	3-2×10	6-2	2	5-4	2	4-10	2
	3-2×12	7-2	2	6-3	2	5-7	3
	4-2×8	6-1	1	5-3	2	4-8	2
	4-2×10	7-2	2	6-2	2	5-6	2
	4-2×12	8-4	2	7-2	2	6-5	2

For SI: 1 inch = 25.4 mm, 1 foot = 304.8 mm.
a. Spans are given in feet and inches.
b. Tabulated values assume #2 grade lumber.
c. Building width is measured perpendicular to the ridge. For widths between those shown, spans are permitted to be interpolated.
d. NJ - Number of jack studs required to support each end. Where the number of required jack studs equals one, the header is permitted to be supported by an approved framing anchor attached to the full-height wall stud and to the header.

Ceiling joists

R802.4 Allowable ceiling joist spans. Spans for ceiling joists shall be in accordance with Tables R802.4(1) and R802.4(2). For other grades and species and for other loading conditions, refer to the AF&PA Span Tables for Joists and Rafters.

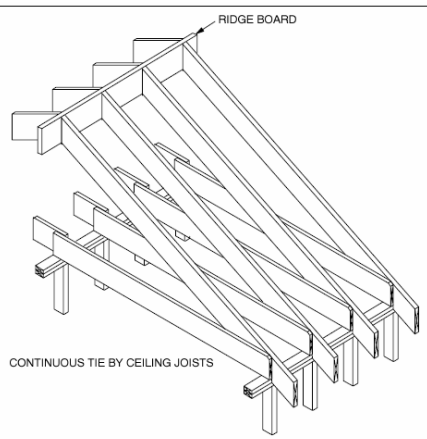

Figure R802.3.1(3)
ROOF FRAMING WITH CEILING JOISTS PARALLEL TO RAFTERS

Ceiling Joists

TABLE R802.4(1)
CEILING JOIST SPANS FOR COMMON LUMBER SPECIES
(Uninhabitable attics without storage, live load = 10 psf, L/Δ = 240)

CEILING JOIST SPACING (inches)	SPECIES AND GRADE		DEAD LOAD = 5 psf			
			2 × 4	2 × 6	2 × 8	2 × 10
			Maximum ceiling joist spans			
			(feet - inches)	(feet - inches)	(feet - inches)	(feet - inches)
16	Douglas fir-larch	SS	11-11	18-9	24-8	Note a
	Douglas fir-larch	#1	11-6	18-1	23-10	Note a
	Douglas fir-larch	#2	11-3	17-8	23-0	Note a
	Douglas fir-larch	#3	9-5	13-9	17-5	21-3
	Hem-fir	SS	11-3	17-8	23-4	Note a
	Hem-fir	#1	11-0	17-4	22-10	Note a
	Hem-fir	#2	10-6	16-6	21-9	Note a
	Hem-fir	#3	9-5	13-9	17-5	21-3
	Southern pine	SS	11-9	18-5	24-3	Note a
	Southern pine	#1	11-6	18-1	23-1	Note a
	Southern pine	#2	11-3	17-8	23-4	Note a
	Southern pine	#3	10-0	14-9	18-9	22-2
	Spruce-pine-fir	SS	11-0	17-4	22-10	Note a
	Spruce-pine-fir	#1	10-9	16-11	22-4	Note a
	Spruce-pine-fir	#2	10-9	16-11	22-4	Note a
	Spruce-pine-fir	#3	9-5	13-9	17-5	21-3

Ceiling Joists

TABLE R802.4(2)
CEILING JOIST SPANS FOR COMMON LUMBER SPECIES
(Uninhabitable attics with limited storage, live load = 20 psf, L/Δ = 240)

CEILING JOIST SPACING (inches)	SPECIES AND GRADE		DEAD LOAD = 10 psf			
			2 × 4	2 × 6	2 × 8	2 × 10
			Maximum ceiling joist spans			
			(feet - inches)	(feet - inches)	(feet - inches)	(feet - inches)
16	Douglas fir-larch	SS	9-6	14-11	19-7	25-0
	Douglas fir-larch	#1	9-1	13-9	17-5	21-3
	Douglas fir-larch	#2	8-9	12-10	16-3	19-10
	Douglas fir-larch	#3	6-8	9-8	12-4	15-0
	Hem-fir	SS	8-11	14-1	18-6	23-8
	Hem-fir	#1	8-9	13-5	16-10	20-8
	Hem-fir	#2	8-4	12-8	16-0	19-7
	Hem-fir	#3	6-8	9-8	12-4	15-0
	Southern pine	SS	9-4	14-7	19-3	24-7
	Southern pine	#1	9-1	14-4	18-11	23-1
	Southern pine	#2	8-11	13-6	17-5	20-9
	Southern pine	#3	7-1	10-5	13-3	15-8
	Spruce-pine-fir	SS	8-9	13-9	18-1	23-1
	Spruce-pine-fir	#1	8-7	12-10	16-3	19-10
	Spruce-pine-fir	#2	8-7	12-10	16-3	19-10
	Spruce-pine-fir	#3	6-8	9-8	12-4	15-0

Rafters

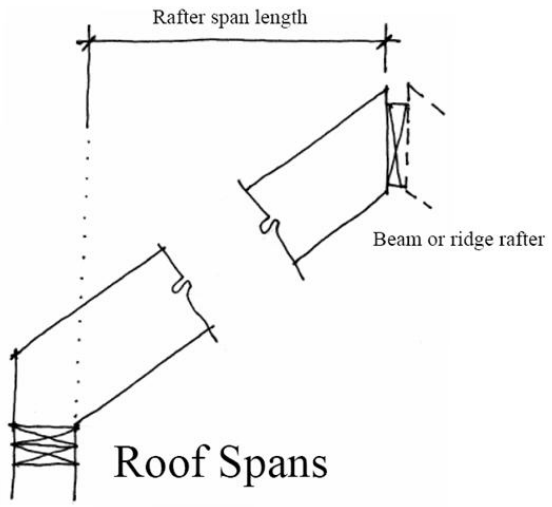

Rafters – Dead Load

Roofing shingles	2.0*
½" sheathing	1.6
2x10@16"oc rafters	6.0
Total dead load =	9.6 PSF

* *Architectural laminated roofing shingles can run up to 4.8 PSF*

Rafters

TABLE R802.5.1(3)
RAFTER SPANS FOR COMMON LUMBER SPECIES
(Ground snow load=30 psf, ceiling not attached to rafters, L/Δ = 180)

RAFTER SPACING (inches)	SPECIES AND GRADE		DEAD LOAD = 10 psf					DEAD LOAD = 20 psf				
			2 × 4	2 × 6	2 × 8	2 × 10	2 × 12	2 × 4	2 × 6	2 × 8	2 × 10	2 × 12
			Maximum rafter spans[a]									
			(feet - inches)	(feet - inches)	(feet - inches)	(feet - inches)	(feet - inches)	(feet - inches)	(feet - inches)	(feet - inches)	(feet - inches)	(feet - inches)
16	Douglas fir-larch	SS	9-1	14-4	18-10	23-9	Note b	9-1	13-9	17-5	21-3	24-8
	Douglas fir-larch	#1	8-9	12-9	16-2	19-9	22-10	7-10	11-5	14-5	17-8	20-5
	Douglas fir-larch	#2	8-2	11-11	15-1	18-5	21-5	7-3	10-8	13-6	16-6	19-2
	Douglas fir-larch	#3	6-2	9-0	11-5	13-11	16-2	5-6	8-1	10-3	12-6	14-6
	Hem-fir	SS	8-7	13-6	17-10	22-9	Note b	8-7	13-6	17-1	20-10	24-2
	Hem-fir	#1	8-5	12-5	15-9	19-3	22-3	7-7	11-1	14-1	17-2	19-11
	Hem-fir	#2	8-0	11-9	14-11	18-2	21-1	7-2	10-6	13-4	16-3	18-10
	Hem-fir	#3	6-2	9-0	11-5	13-11	16-2	5-6	8-1	10-3	12-6	14-6
	Southern pine	SS	8-11	14-1	18-6	23-8	Note b	8-11	14-1	18-6	23-8	Note b
	Southern pine	#1	8-9	13-9	18-1	21-5	25-7	8-8	12-10	16-2	19-2	22-10
	Southern pine	#2	8-7	12-6	16-2	19-3	22-7	7-10	11-2	14-5	17-3	20-2
	Southern pine	#3	6-7	9-8	12-4	14-7	17-4	5-10	8-8	11-0	13-0	15-6
	Spruce-pine-fir	SS	8-5	13-3	17-5	22-1	25-7	8-5	12-9	16-2	19-9	22-10
	Spruce-pine-fir	#1	8-2	11-11	15-1	18-5	21-5	7-3	10-8	13-6	16-6	19-2
	Spruce-pine-fir	#2	8-2	11-11	15-1	18-5	21-5	7-3	10-8	13-6	16-6	19-2
	Spruce-pine-fir	#3	6-2	9-0	11-5	13-11	16-2	5-6	8-1	10-3	12-6	14-6

Rafters

TABLE R802.5.1(5)
RAFTER SPANS FOR COMMON LUMBER SPECIES
(Ground snow load=30 psf, ceiling attached to rafters, L/Δ = 240)

RAFTER SPACING (inches)	SPECIES AND GRADE		DEAD LOAD = 10 psf					DEAD LOAD = 20 psf				
			2 × 4	2 × 6	2 × 8	2 × 10	2 × 12	2 × 4	2 × 6	2 × 8	2 × 10	2 × 12
			Maximum rafter spans[a]									
			(feet - inches)	(feet - inches)	(feet - inches)	(feet - inches)	(feet - inches)	(feet - inches)	(feet - inches)	(feet - inches)	(feet - inches)	(feet - inches)
16	Douglas fir-larch	SS	8-3	13-0	17-2	21-10	Note b	8-3	13-0	17-2	21-3	24-8
	Douglas fir-larch	#1	8-0	12-6	16-2	19-9	22-10	7-10	11-5	14-5	17-8	20-5
	Douglas fir-larch	#2	7-10	11-11	15-1	18-5	21-5	7-3	10-8	13-6	16-6	19-2
	Douglas fir-larch	#3	6-2	9-0	11-5	13-11	16-2	5-6	8-1	10-3	12-6	14-6
	Hem-fir	SS	7-10	12-3	16-2	20-8	25-1	7-10	12-3	16-2	20-8	24-2
	Hem-fir	#1	7-8	12-0	15-9	19-3	22-3	7-7	11-1	14-1	17-2	19-11
	Hem-fir	#2	7-3	11-5	14-11	18-2	21-1	7-2	10-6	13-4	16-3	18-10
	Hem-fir	#3	6-2	9-0	11-5	13-11	16-2	5-6	8-1	10-3	12-6	14-6
	Southern pine	SS	8-1	12-9	16-10	21-6	Note b	8-1	12-9	16-10	21-6	Note b
	Southern pine	#1	8-0	12-6	16-6	21-1	25-7	8-0	12-6	16-2	19-2	22-10
	Southern pine	#2	7-10	12-3	16-2	19-3	22-7	7-10	11-2	14-5	17-3	20-2
	Southern pine	#3	6-7	9-8	12-4	14-7	17-4	5-10	8-8	11-0	13-0	15-6
	Spruce-pine-fir	SS	7-8	12-0	15-10	20-2	24-7	7-8	12-0	15-10	19-9	22-10
	Spruce-pine-fir	#1	7-6	11-9	15-1	18-5	21-5	7-3	10-8	13-6	16-6	19-2
	Spruce-pine-fir	#2	7-6	11-9	15-1	18-5	21-5	7-3	10-8	13-6	16-6	19-2
	Spruce-pine-fir	#3	6-2	9-0	11-5	13-11	16-2	5-6	8-1	10-3	12-6	14-6

Rafters – adjust for ceiling hgt

a. The tabulated rafter spans assume that ceiling joists are located at the bottom of the attic space or that some other method of resisting the outward push of the rafters on the bearing walls, such as rafter ties, is provided at that location. When ceiling joists or rafter ties are located higher in the attic space, the rafter spans shall be multiplied by the factors given below:

H_C/H_R	Rafter Span Adjustment Factor
2/3 or greater	0.50
1/2	0.58
1/3	0.67
1/4	0.76
1/5	0.83
1/6	0.90
1/7.5 and less	1.00

where: H_C = Height of ceiling joists or rafter ties measured vertically above the top of the rafter support walls.

H_R = Height of roof ridge measured vertically above the top of the rafter support walls.

Rafters – adjust for ceiling hgt

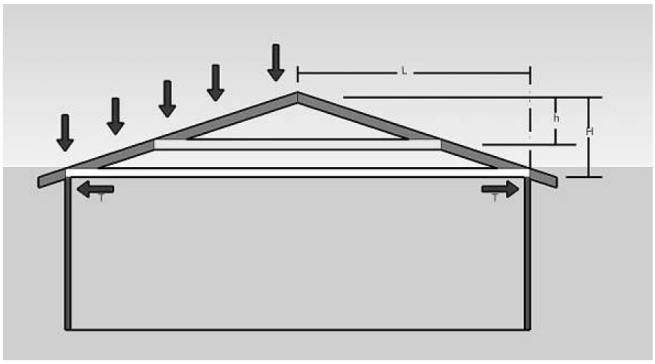

Thrust in a Raised Rafter Tie

This Raised Tie Rafter Thrust Calculator is for use with a roof system with thrust being restrained by ties raised above the plates.
Building code limits the tie to the lower third of the distance between the plate and ridge
Consult IRC Table R802.5.1 for rafter span adjustment factors for rafter sizing with raised ties

Hip / Valley Rafters

R802.3 Framing details. Rafters shall be framed to ridge board or to each other with a gusset plate as a tie. Ridge board shall be at least 1-inch (25.4 mm) nominal thickness and not less in depth than the cut end of the rafter. At all valleys and hips there shall be a valley or hip rafter not less than 2-inch (51 mm) nominal thickness and not less in depth than the cut end of the rafter. Hip and valley rafters shall be supported at the ridge by a brace to a bearing partition or be designed to carry and distribute the specific load at that point. Where the roof pitch is less than three units vertical in 12 units horizontal (25-percent slope), structural members that support rafters and ceiling joists, such as ridge beams, hips and valleys, shall be designed as beams.

Hip Rafters

(INCREASING LOAD FROM ZERO TO A MAXIMUM)

Through common practice it has been shown that there is some buttressing effect from steep rafters pushing against each other at a hip rafter, however there isn't any provision for this in the building code and hips must be designed as a common beam as if it were horizontal.

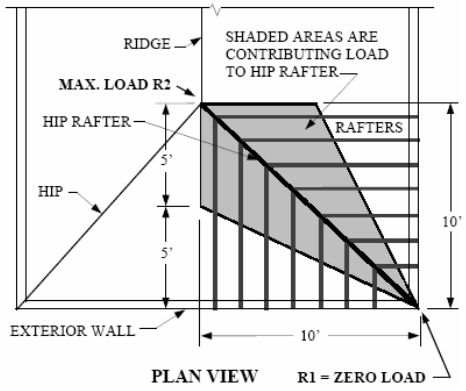

Valley Rafters

Valley members supporting rafters are sized as beams with an increasing load from zero to a maximum. The amount of load carried by the valley depends upon the how the surrounding roof is is framed.

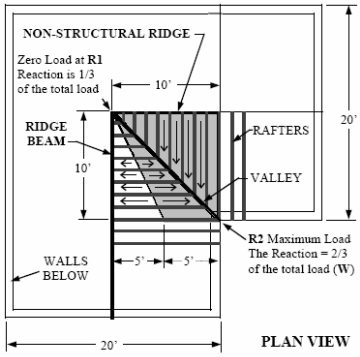

Valley Loads are totaled similarly to hip rafters, however care must be taken when determining whether the supported rafters are contributing all or only half of their load to the valley beam. The example above shows both of the possible conditions. The *ridge beam* on the left might be representative of a cathedral ceiling and the top, *non-structural ridge* might be rafters meeting at a 1x6 ridge board and typical ceiling joists below supporting a flat ceiling.

The load to the Ridge Beam shown above is an increasing load from the rafters on the valley side plus a typical uniform load from the rafters on the opposite side (1/2 the rafter span from the ridge to the outside wall). The location of the ridge beam's supporting posts would, of course, dictate whether the increasing load was uniformly increasing over the entire span or just a portion of it.

Questions?

- Milton Gregory Grew, AIA
  - Licensed Architect
  - Building Official
  - Codes Consultant
- T: 203-263-0292 C: 203-217-1074
- Email: mggrew@grewdesign.com
- www.ctbuildingcodes.com