R87-07

# *Feasibility Study Report for the Proposed Biomass 38 MW Project (#191) Tapping 115kV Line 1191 or Line 1238 near Frost Bridge 115 kV Substation in Connecticut*

Prepared for

**ISO New England, Inc.**

Submitted by:
Alan Ng
Lengcheng Huang
Baldwin P. Lam

February 28, 2008

Siemens PTI Project Number P/21-113177

**Siemens Power Transmission & Distribution, Inc.**
**Power Technologies International**
1482 Erie Boulevard • P.O. Box 1058
Schenectady, New York 12301-1058 US
Tel: 518-395-5000 • Fax: 518-346-2777
www.usa.siemens.com/PTI

SIEMENS

This document may contain Critical Energy Infrastructure Information -Do Not Release

This page intentionally left blank.

This document may contain Critical Energy Infrastructure Information -Do Not Release

# Contents

**Legal Notice** ..... **v**

**Executive Summary** ..... **vii**

N-1 Thermal Analysis ..... vii

N-2 Analysis Thermal Analysis ..... vii

Interface Transfer Limit Analysis ..... viii

**Section 1 Introduction** ..... **1-1**

**Section 2 Study Methodology** ..... **2-1**

2.1 Criteria ..... 2-1

2.1.1 Voltage Criteria ..... 2-1

2.1.2 Thermal Criteria ..... 2-1

2.2 Thermal and Voltage Analysis ..... 2-2

2.2.1 Thermal Analysis ..... 2-2

2.2.2 Voltage Analysis ..... 2-2

2.2.3 Contingencies ..... 2-2

2.2.4 Monitored Elements ..... 2-2

2.2.5 Load Flow Solution Options ..... 2-2

2.3 Transfer Analysis ..... 2-3

2.4 Short Circuit Analysis ..... 2-3

**Section 3 Project Description and Modeling** ..... **3-1**

3.1 Project Description ..... 3-1

3.2 Project Modeling ..... 3-2

3.3 Generator and GSU Transformer Modeling ..... 3-3

**Section 4 Base Cases and Generation Dispatch** ..... **4-1**

4.1 Development of Base Cases ..... 4-1

4.2 Power Flow Scenarios ..... 4-3

4.2.1 Interface and Generation Dispatch Scenarios ..... 4-3

4.2.2 Project Dispatch ..... 4-3



This document may contain Critical Energy Infrastructure Information -Do Not Release

4.3 Generation Dispatch Scenarios ..... 4-4

**Section 5 Line out Testing (N-2) ..... 5-1**

5.1 Without Project ..... 5-1

5.2 With Project -- Line 1238 (Frost Bridge - Carmel Hill) option ..... 5-1

5.3 With Project -- Line 1191 (Frost Bridge – Campville) option ..... 5-1

**Section 6 N-1 Thermal and Voltage Analysis Results ..... 6-1**

6.1 Project Impact in N-1 Contingency Conditions ..... 6-1

6.2 Thermal and Voltage Impacts ..... 6-1

6.2.1 2010 Summer Peak Case, NE is importing 1000 MW from NY ..... 6-1

6.2.2 2010 Summer Peak Case, NE is exporting 1000 MW to NY ..... 6-2

6.2.3 2010 Shoulder Case, NE is importing 1000 MW from NY ..... 6-2

6.2.4 2010 Shoulder Case, NE is exporting 1000 MW to NY ..... 6-2

**Section 7 N-2 Thermal and Voltage Analysis Results ..... 7-1**

7.1 N-2 Thermal and Voltage Impacts with Project Tapping Line 1238 ..... 7-1

7.1.1 Line out - Frost Bridge - Campville 1191 Line ..... 7-1

7.1.2 Line out – New ring bus to Frost Bridge ..... 7-2

7.1.3 Line out - New ring bus to Carmel Hill ..... 7-2

7.2 N-2 Thermal and Voltage Impacts with Project Tapping Line 1191 ..... 7-2

7.2.1 Line out - New tap point – Campville ..... 7-2

7.2.2 Line out – Thomaston - Campville 1921 Line ..... 7-3

**Section 8 Transfer Limit Analysis ..... 8-1**

8.1 Project connected to the 1191 Line ..... 8-2

8.2 Project connected to the 1238 Line ..... 8-2

**Section 9 Short Circuit Results ..... 9-1**

**Section 10 Cost Estimation ..... 10-1**

**Section 11 Conclusions ..... 11-1**

N-1 Thermal Analysis ..... 11-1

N-2 Analysis Thermal Analysis ..... 11-1

Interface Transfer Limit Analysis ..... 11-1

Short Circuit Results (TBD by NU & UI) ..... 11-2



This document may contain Critical Energy Infrastructure Information -Do Not Release

Conclusion..... 11-2

**Appendix A Load Flow Summaries ..... A-1**

**Appendix B New England 345kV and Eastern CT One-Line Power Flow Diagrams..... B-1**

**Appendix C List of Contingencies ..... C-1**

**Appendix D N-1 Analysis – Detailed Results..... D-1**

**Appendix E N-2 Analysis – Detailed Results..... E-1**

**Appendix F Transfer Analysis Results..... F-1**

**Appendix G Interface Definitions - Sources & Sinks..... G-1**

**Appendix H Short Circuit Scope..... H-1**



This document may contain Critical Energy Infrastructure Information -Do Not Release

# Legal Notice

This document was prepared by Siemens Power Transmission & Distribution, Inc., Power Technologies International (Consultant), on behalf of ISO-NE with the intention of meeting the requirements of the ISO New England Transmission, Market and Services Tariff. None of Consultants, ISO-NE, nor their parent corporations or affiliates, nor any person acting in their behalf (a) makes any warranty, expressed or implied, with respect to the use of any information or methods disclosed in this document or (b) assumes any liability with respect to the use of any information or methods disclosed in this document, in either case except as set out in the aforementioned Tariff. None of Consultants or ISO-NE assumes any responsibility for any damages incurred by any entities other than those named in this Study.



This document may contain Critical Energy Infrastructure Information -Do Not Release

This page intentionally left blank.



This document may contain Critical Energy Infrastructure Information -Do Not Release

# Executive Summary

Siemens Power Transmission & Distribution, Inc., Power Technologies International (Siemens PTI) has conducted a Feasibility Study for the proposed 38 MW Biomass Project (#191) near the 115kV Frost Bridge Substation in Connecticut.

The Project will consist of one biomass fired boiler coupled with a steam turbine generator which has a summer (50$^{o}$F or above) gross output of 38 MW. The Project will be interconnected to a tap point on either the 115 kV Frost Bridge-Carmel line #1238 or the Frost Bridge-Campville 115 kV line #1191, both at approximately 4,500 feet from the Frost Bridge Substation. The two interconnection options are both included in this study. For the analysis, the 34 MW net output of the project is dispatched against the Franklin Drive 22MW and Forest PF 13MW units. The Project is expected to begin operation in January 2010.

The thermal and voltage analysis was carried out for Year 2010 (Post Middletown-Norwalk project) conditions. The study results are summarized below.

## N-1 Thermal and Voltage Analysis

The project has a thermal violation, which will be corrected by an approved reliability project, for the peak load scenario with NY importing 1000 MW from NE for both interconnection options.

The overloaded element is the 115kV 1784 line between Northeast Simsbury and North Bloomfield This line is overloaded to 100.3% or 100.5% of its normal rating without any contingency with the Project tapping to 1191 line or 1238 line. The line is loaded to about 98% pre-contingency without the Project. The impact of the Project is about 2%. The thermal violations can be eliminated by using the 2% series reactor on the 1784 line at North Bloomfield, which is part of the approved Frost Bridge autotransformer project and will be in service the same time with the Middletown – Norwalk project. With the 2% series reactor and the Project in service, the loadings of the line are reduced to 91% for both interconnection options. Therefore, the project does not cause any significant thermal impact in New England under N-1 conditions.

The analysis shows that the project does not cause any significant voltage impact in New England under N-1 conditions.

## N-2 Analysis Thermal and Voltage Analysis

The analysis shows that the project causes significant thermal impact on the following transmission facility for both interconnection options.

- Chippen Hill – Chippen Hill Tap 115 kV line

The thermal impact is mainly caused by the Project being dispatched against the 22MW Franklin Drive (Bus 73543) and 13MW Forest PF (Bus 73536) units. It can be resolved by re-dispatching against some other local generation.



This document may contain Critical Energy Infrastructure Information -Do Not Release

The analysis shows that the project does not cause voltage impact on transmission facilities in New England under N-2 conditions.

## Interface Transfer Limit Analysis

A linear transfer limit analysis was conducted to evaluate the impact of the project on the Southwest Connecticut (SWCT) interface. The peak load and shoulder load scenarios with NY exporting 0 MW to NE were studied in this analysis. Both interconnection options have similar results.

The maximum negative impact is about 23 MW on the SWCT interface. This occurs for the peak load scenario with NE -NY interface equal to zero. The limiting element is the Shaws Hill – Bunker Hill 115 kV for contingency FROSTBR27T at a transfer limit of 3685MW.

In this transfer level (3685MW), there are only about 100 MW machines in service in SWCT. This is considered as an unrealistic scenario. Base on this fact, the negative 23 MW impact will not be considered a significant impact for the project.

## Short Circuit Results

The breaker duty study results show that the project does not specifically cause any circuit breakers to be over-dutied on either the UI or the NU system.

## Cost Estimate

The cost of interconnecting the project will be provided in the System Impact Study.

## Conclusion

The thermal and voltage analysis for the conditions tested shows that the study Project has no significant adverse impacts on the transmission system that may require transmission upgrades or system reinforcements.



This document may contain Critical Energy Infrastructure Information -Do Not Release

Section

1

# Introduction

This document presents the feasibility study results of the thermal and voltage analysis for the interconnection of the proposed Biomass 38 MW Project (#191) tapping 115kV Line 1191 or Line 1238 near Frost Bridge 115 kV Substation in Connecticut ("the Project"). It is being developed by Tamarack Energy, Inc.

The Project will consist of one biomass fired boiler coupled with a steam turbine generator which has a summer (50$^{o}$F or above) gross output of 38 MW. The Project will be interconnected to a tap point on either the 115 kV Frost Bridge-Carmel line #1238 or the Frost Bridge-Campville 115 kV line #1191, at approximately 4,500 feet from the Frost Bridge Substation. The generator will be connected to the 115 kV system through a three-phase two-winding 13.8/118 kV generator step-up transformer. The Project is expected to begin operation in January 2010. (Note: Developer has requested to have the original July 1, 2009 in-service date delayed).

The thermal and voltage analysis was carried out for the Year 2010 system with the Middletown-Norwalk Project in service (Post M-N).



This document may contain Critical Energy Infrastructure Information -Do Not Release

Section

2

# Study Methodology

## 2.1 Criteria

The study was conducted under the ISO-NE Minimum Interconnection Standard, PP5-6. The analysis was performed for normal conditions with all lines in service and with line out conditions for cases, with and without the Project, to identify thermal and voltage problems that may be attributed to the Project. The line out conditions are described in Section 5.

Load flow results were analyzed using the criteria in the Reliability Standards for the New England Area Bulk Power Supply System, dated February 2005, and in the Transmission Reliability Standards for Northeast Utilities, dated January 2004.

### 2.1.1 Voltage Criteria

Table 3-1 shows the voltage criteria that were applied in the study

**Table 3-1. Normal and Emergency Voltage Criteria**

| Voltage Level | Bus Voltage Limits (% of Nominal) | |
|---|---|---|
| | Normal Conditions | Emergency Conditions |
| > 115-kV | 95 to 105% | 95 to 105% |
| < 115-kV (NU) | 95 to 105% | 95 to 105% |
| < 115-kV (UI) | 95 to 105% | 90 to 105% |
| Millstone 345-kV | 100 to 105% | 100 to 105% |

### 2.1.2 Thermal Criteria

Table 3-2 shows the thermal criteria that were applied in the study.

**Table 3-2. Thermal Criteria**

| SYSTEM CONDITION | MAXIMUM ALLOWABLE FACILITY LOADING |
|---|---|
| Pre-contingency | Normal Rating |
| Post-contingency | Long Time Emergency Rating (LTE) |



This document may contain Critical Energy Infrastructure Information -Do Not Release

## 2.2 Thermal and Voltage Analysis

Power flow cases were tested for both thermal and voltage violations. The AC contingency analysis function of Siemens PTI's PSS™E Version 30 was used to compare the steady state performance of the New England interconnected system, with and without the proposed Project.

### 2.2.1 Thermal Analysis

The power flow base cases (without the project) were adjusted to ensure that there were no pre-project post-contingency overloads. During the contingency analysis with the Project at maximum output, any monitored element with post-contingency loading found to be higher than 95% of the LTE rating was reported.

N-2 line out conditions were also evaluated.

### 2.2.2 Voltage Analysis

The load flow base cases (without the project) were adjusted to ensure that there were no pre- project post-contingency voltage criteria violations. During contingency analysis with the Project at maximum output, any monitored bus with voltage found to be outside the range of the post-contingency criteria were reported.

### 2.2.3 Contingencies

The list of contingencies considered in the study is presented in Appendix C. The contingency lists include new contingencies created as a result of the interconnection of the Project.

### 2.2.4 Monitored Elements

All facilities rated at 69 kV and above in Connecticut (zones 171 through 186) were monitored.

### 2.2.5 Load Flow Solution Options

The ACCC activity of Siemens PTI PSS™E software was used. The following pre-contingency load flow solution options were applied:

1. Transformer taps adjusted by stepping
2. Phase shifters allowed to move to regulate power flow
3. DC taps allowed to move
4. Switchable shunts allowed to move
5. Area interchange controls disabled
6. VAR limits observed and applied immediately at the start of each solution



This document may contain Critical Energy Infrastructure Information -Do Not Release

The following post-contingency load flow solution options were applied:

1. Transformer taps locked at pre-contingency settings
2. Phase shifter angles fixed at pre-contingency settings
3. DC taps locked at pre-contingency settings
4. Switchable shunts locked at pre-contingency settings
5. Area interchange controls disabled
6. VAR limits observed and applied immediately at the start of each solution

## 2.3 Transfer Analysis

A linear transfer analysis was performed to evaluate the Project's impact on the Southwest Connecticut (SWCT) interface.

The transfer analysis was performed using Siemens PTI's Managing and Utilizing System Transmission (PSS™MUST) software version 8.3.1. PSS™MUST calculates the first contingency incremental transfer capability (FCITC) by use of DC power flow. FCITC is a measure of the maximum increase in power transfer that can take place between two selected subsystems without violating any branch ratings or interface for normal and contingency conditions.

## 2.4 Short Circuit Analysis

A short circuit analysis was conducted by Northeast Utilities and the United Illuminating Company, the transmission owners. Siemens PTI includes the results of the short circuit analysis in the body of this report.



This document may contain Critical Energy Infrastructure Information -Do Not Release

Section

3

# Project Description and Modeling

## 3.1 Project Description

The thermal and voltage analysis of the Biomass Project was performed for each of the two interconnection configurations as shown in the diagrams below. According to the Transmission Owner, Northeast Utilities, connection of the Project to line 1238(to Carmel Hill) will require a 3-breaker ring, while connection to line 1191 (to Campville) can be done using a tap and a single breaker.

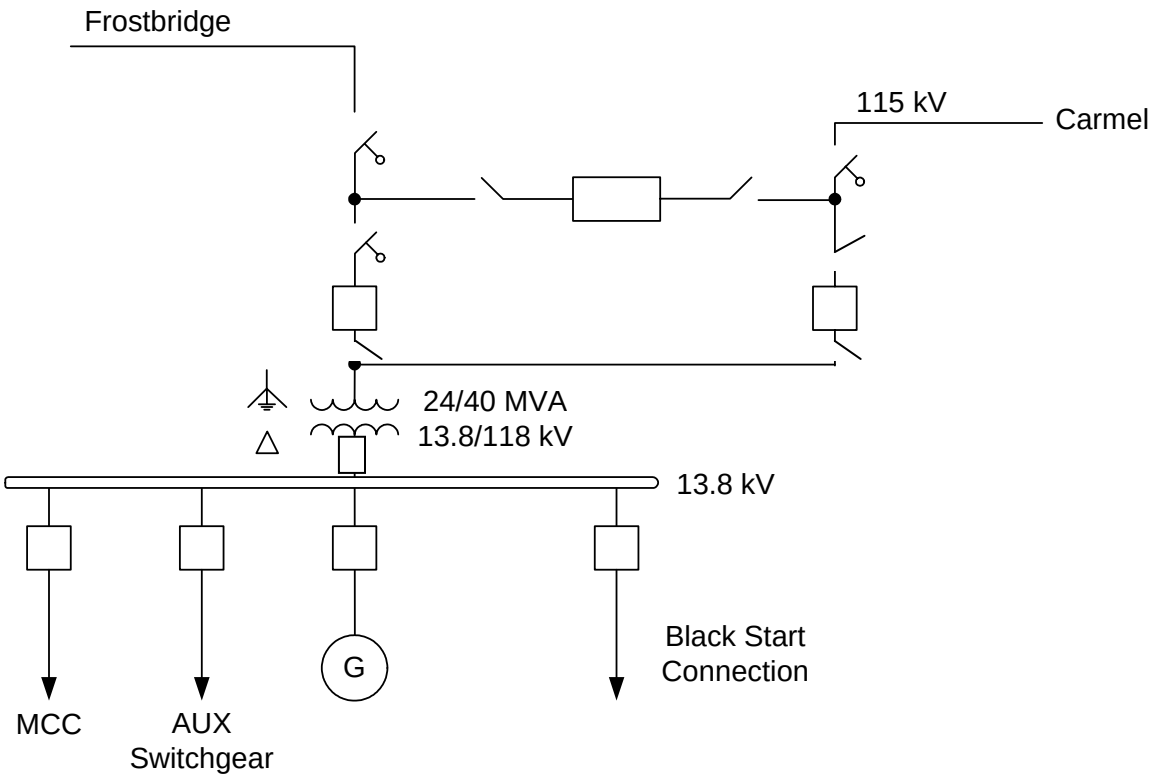


**Figure 3-1. Project Interconnection (Tapped at Frost Bridge-Carmel line #1238)**




This document may contain Critical Energy Infrastructure Information -Do Not Release

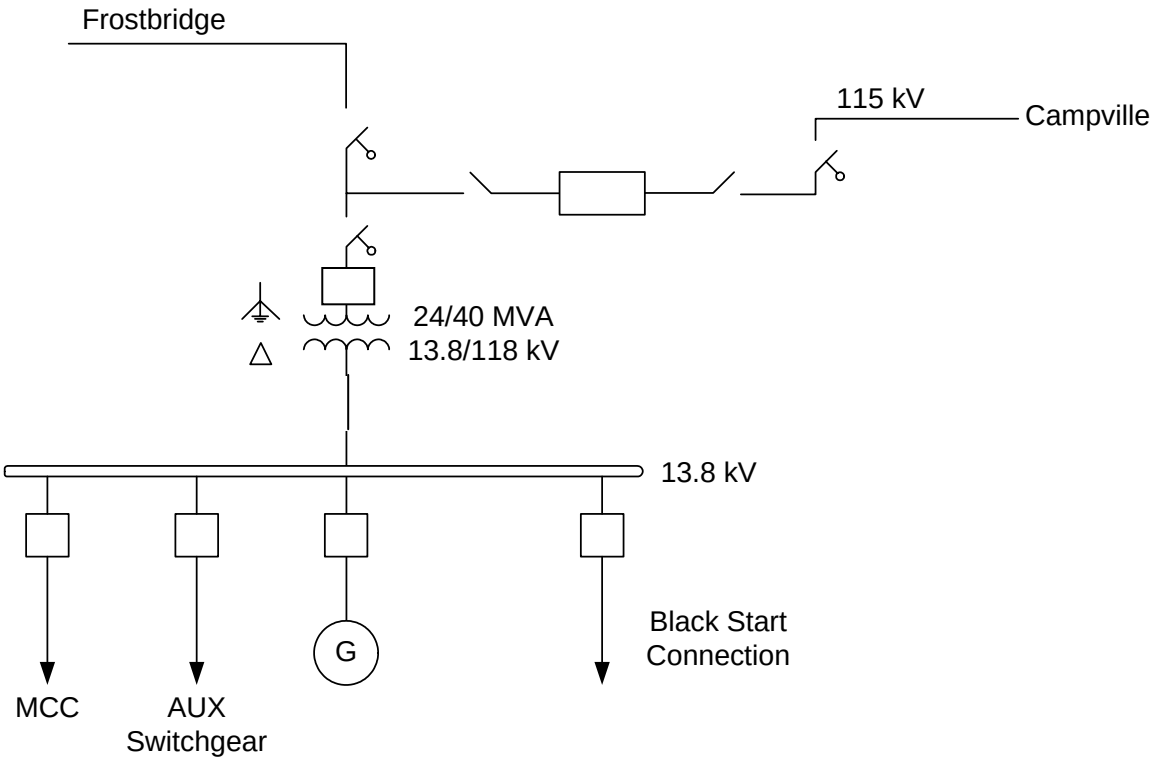


**Figure 3-2. Project Interconnection (Tapped at Frost Bridge-Campville 115 kV line #1191)**

## 3.2 Project Modeling

The Project was modeled as a single steam turbine generator providing net power output of 34 MW in summer and the corresponding reactive power limits shown in Table 3-1 below. The station service load was explicitly modeled as a constant P+jQ load at the generator's 13.8 kV bus.

**Table 3-1. Proposed Generator**

| Generator Data | |
|---|---|
| Number of Generators | 1 |
| Generator Ratings | 50 MVA, 13.8 kV, 0.85 PF |
| Greatest Unit Gross Output at Ambient Temperature of 50° F or above | 38 MW |
| Greatest Unit Net Output at Ambient Temperature of 50° F or above | 34 MW |
| Overexcited Reactive Power Limit at Maximum Unit Rating (MW) at 50°F or above | 32 MVAR |
| Underexcited Reactive Power Limit at Maximum Unit Rating (MW) at 50°F or above | -20 MVAR |



This document may contain Critical Energy Infrastructure Information -Do Not Release

**Table 3-1. Proposed Generator**

| | |
|---|---|
| Station Service Load | 4 MW , 2.4 MVAR |

In the analysis, the turbine-generator model was connected to a tap point on either the 115 kV Frost Bridge-Carmel Hill line #1238 or the Frost Bridge-Campville 115 kV line #1191, at approximately 4,500 feet from the Frost Bridge Substation. The generator will be connected to the 115 kV system through a three-phase two-winding 13.8/118 kV generator step-up (GSU) transformer. Table 3-2 shows the data for the GSU transformer.

**Table 3-2. GSU Transformer**

| | |
|---|---|
| Self-cooled\maximum nameplate ratings | 30/50 MVA |
| Voltage ratio, generator side/system side | 13.8/118.0 kV |
| Winding connections, low voltage/high voltage | Delta/ wye |
| Fixed Taps | 112/115/118/121/124 kV |
| Present tap setting | 118 kV |
| Impedance, $Z_1$ (on self-cooled MVA rating) | 9%, X/R = 25 |
| Impedance, $Z_0$ (on self-cooled MVA rating) | 9%, X/R 25 |

## 3.3 Generator and GSU Transformer Modeling

Load flow calculations were performed to determine the tap setting that will allow the full utilization of the entire reactive power output range of the unit. In the calculations, the machine was modeled at the gross power output of 38 MW and the station service load was modeled at the 13.8 kV generator terminal. The calculations were performed at a series of tap settings for voltage schedules of 112, 115, 118, 121 and 124 kV on the high side of the GSU transformers, i.e., between 0.95 per unit and 1.05 per unit voltage. The corresponding machine reactive power output was found for machine terminal voltages between 0.95 and 1.05 per unit (of 13.8 kV).

Figures 3-3,to 3-5 are graphs of the machine's reactive power output versus terminal voltage at the 112, 115, 118, 121 and 124 kV GSU tap setting for system voltage schedules of 109, 115 and 121 kV, respectively. The 118 kV tap setting was found adequate for normal operating conditions, i.e., the setting allows the machine to operate across its reactive capability range for a wide range of system conditions. Hence, the 118 kV tap position will be modeled in the thermal and voltage study.



This document may contain Critical Energy Infrastructure Information -Do Not Release

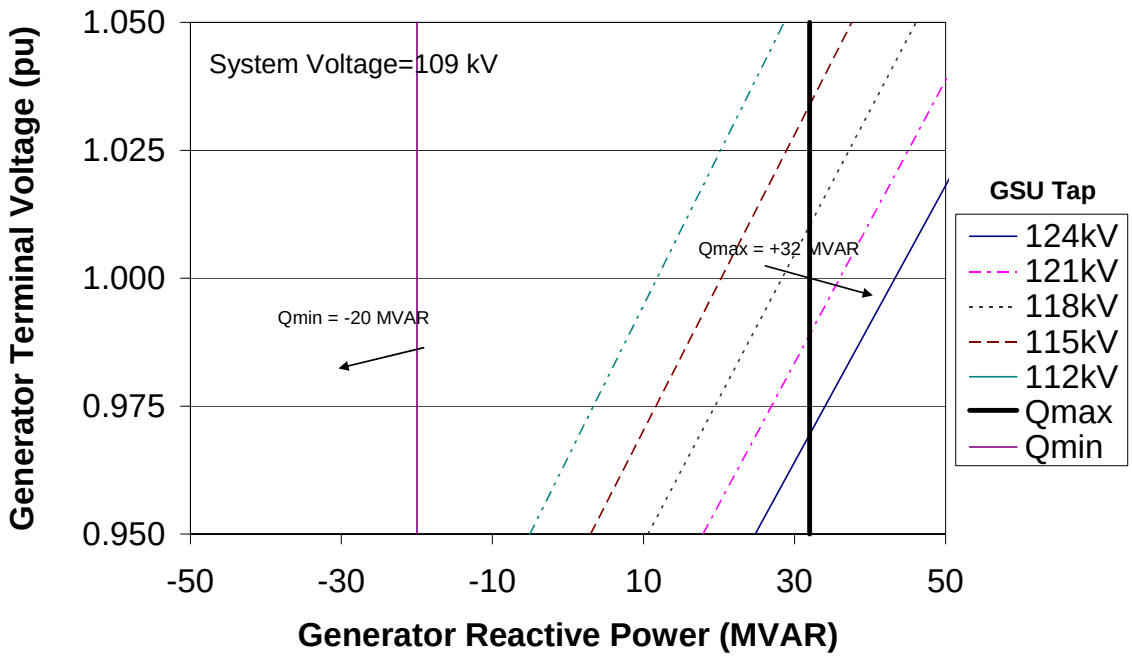


**Figure 3-3. The Project Terminal Voltage vs. Reactive Power Output at 109 kV System Voltage**

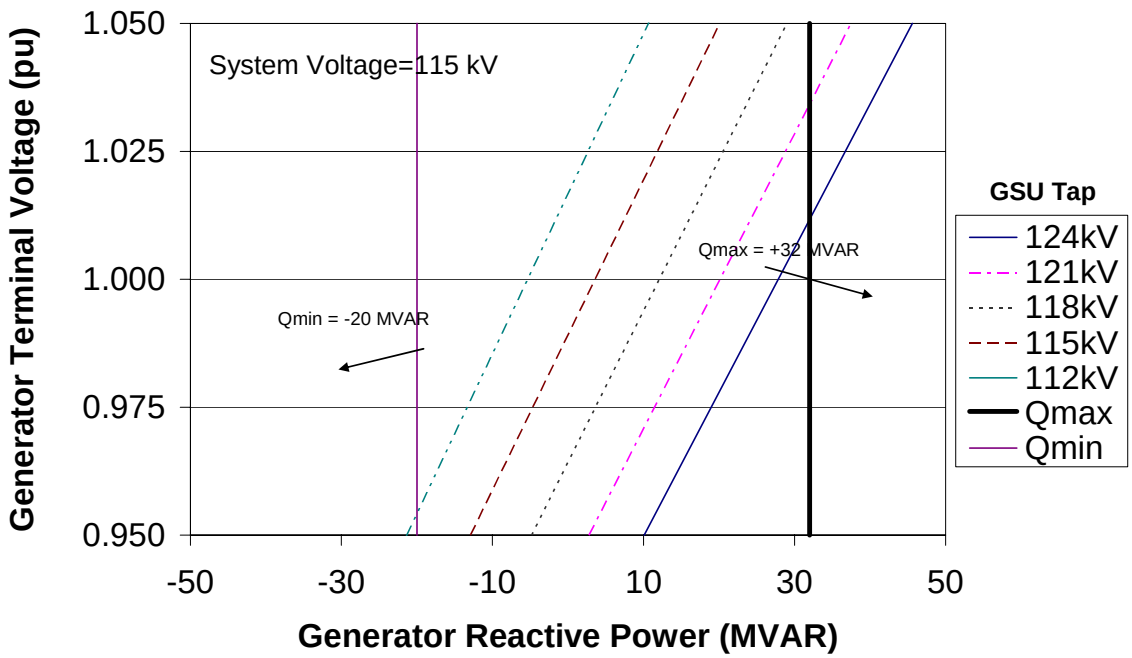


**Figure 3-4. The Project Terminal Voltage vs. Reactive Power Output at 115 kV System Voltage**



This document may contain Critical Energy Infrastructure Information -Do Not Release

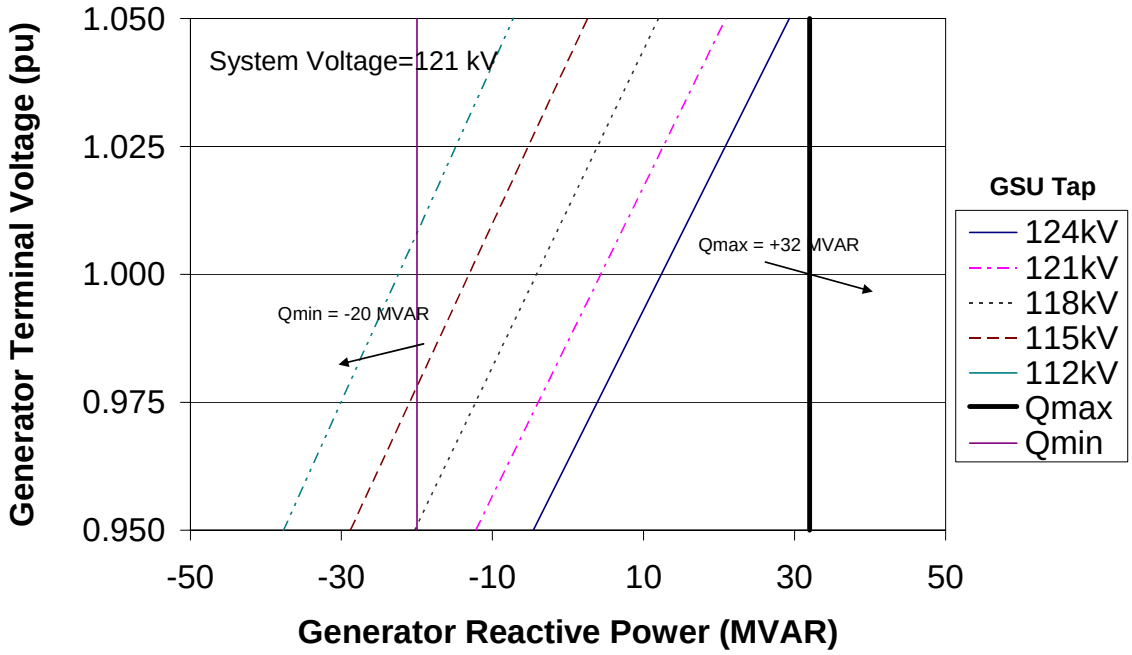


**Figure 3-5. The Project Terminal Voltage vs. Reactive Power Output at 121 kV System Voltage**



This document may contain Critical Energy Infrastructure Information -Do Not Release

Section

4

# Base Cases and Generation Dispatch

## 4.1 Development of Base Cases

Power flow cases representing 2010 summer peak and shoulder load conditions are used. Summer peak and shoulder base cases were provided by ISO-NE. The base cases are based on the 2011 summer peak case from the 2005 NPCC Base Case Library.

In the summer peak base case, the load is scaled to the year 2010 90/10 summer peak load and loss level (31,160 MW) of the 2006 CELT forecast. In the shoulder load base case, the load is obtained by scaling the summer 90/10 peak load down to 75% (i.e, 21,889 MW) of the 50/50 summer peak load and loss of the 2006 CELT forecast for year 2010.

The ISO-NE CELT 2007 forecast for 2009 does not significantly differ from the 2006 CELT values.

Table 4-1 shows the NEPOOL load and transmission losses for load levels for the base case power flows considered in the study.

**Table 4-1. NEPOOL Load and Losses Modeled in Study Cases (MW)**

| | Year 2010 | |
|---|---|---|
| | **Load** | **Losses** |
| **Peak** | 30541 | 695 |
| **Shoulder** | 21516 | 423 |

The following transmission projects are modeled in all the base cases:

- Southwest Rhode Island transmission project
- Long Island Replacement Cable
- Norwalk-Glenbrook cables
- Haddam 345/115-kV autotransformer
- Barbour Hill 345/115 kV autotransformer



This document may contain Critical Energy Infrastructure Information -Do Not Release

- Killingly 345/115-kV autotransformer
- Northern Reliability Interconnect project (NRI)
- Wilton project
- Shaws Hill and Oxford substation projects
- Bethel-Norwalk project
- Middletown-Norwalk transmission project

The following generation projects are modeled into the cases:

- Gas Turbine #104, 183.6 MW, Waterside 115kV Substation
- Gas Turbine#115, 49MW, Norwalk 27.6kV Substation
- Gas Turbine #125, 115MW, Cos Cob 115kV Substation
- Gas Turbine #125, 330MW, Norwalk 345kV
- Gas Turbine #140, 100MW, Wallingford 115kV Substation
- Wind Project #145, 51MW, CL&P, 115kV 1607 line
- Biomass #150, 37.5 MW, CL&P, Fry Brook Station
- Gas Turbine #159, 352.4MW, Singer 345kV Substation
- Gas Turbine #161, 200MW, Devon 115kV  Substation
- Gas Turbine #160, 86MW, CL&P, Middletown 115kV Substation
- Gas Turbine #161, 112MW, CL&P, Middletown 115kV Substation
- Gas Turbine #161, 224W, CL&P  Middletown 345kV Substation
- Combined Cycle #174, 280MW, Stony Brook 345kV Substation
- Combined Cycle #161, 390MW, Montville 345kV Substation
- Gas Turbine #175/182, 212MW, CL&P, Long Mountain-Plumtree 345kV Line
- Gas Turbine,/Hydro,  #186, 100 MW / 48MW, CL&P, Shepaug 115kV Substation
- Gas Turbine #190, 39MW, CL&P, Falls Village 69kV Substation
- Gas Turbine #190, 50MW, CL&P, Stevenson 115kV Substation



This document may contain Critical Energy Infrastructure Information -Do Not Release

## 4.2 Power Flow Scenarios

Summer peak and shoulder load power flow cases were tested in the study for the year 2010 (Post M-N project) with and without the Project in-service.

### 4.2.1 Interface and Generation Dispatch Scenarios

Power flow cases representing 2010 Peak and Shoulder load conditions with high SWCT Import and high CT Import levels were studied with and without the Project in service. 2010 cases are Post M-N cases. Only scenarios with a NY-NE interface flow levels of -1000 MW and +1000 MW were studied.

A total of 12 scenarios were created and studied. The four major differences between the scenarios are the New York and New England interface flow level (+1000MW or -1000MW), loading conditions (Peak or Shoulder), interconnection options (tapping line 1191 or 1238) and project status (with or without the Project).

The power flow through the Northport-Norwalk cable was set to 0 MW transfer in all scenarios.

Cases were named as follows:

- Load level - PK for peak or SH for shoulder
- Interface scenario - 1 for NY-NE interface at +1000, 2 for NY-NE interface at -1000
- Project status - A for without Project, B for with the Project
- Interconnection Option – TAP1191 for tapping line 1191, TAP1238 for tapping line 1238

### 4.2.2 Project Dispatch

The net output (34 MW) from the Project is dispatched against local units. Table 4-2 shows the Project dispatch.

**Table 4-2. Project Dispatch (MW)**

| Unit | Case without Project | Case with the Project |
|---|---|---|
| Forest PF (Bus 73536) | 13 | 0 |
| Franklin Drive (Bus 73543) | 22 | 0 |
| Project Gross Output | 0 | 38 |
| Station Service Load | 0 | 4 |



This document may contain Critical Energy Infrastructure Information -Do Not Release

Power flow summaries for the summer peak and shoulder level base cases considered in the study are shown in Appendix A. Power flow one-line diagrams for Southwest Connecticut and New England 345 kV systems are shown in Appendix B.

## 4.3 Generation Dispatch Scenarios

The dispatch of the Connecticut units for the peak and shoulder load scenarios is shown in Table 4- for the cases without the Project. The active power flows of relevant interfaces are also shown. The Project dispatch in the cases with the Project is as shown in Table 4- above.

**Table 4-3. 2010 Connecticut Generation Dispatch (MW) – without Project**

| Unit | Summer Peak | | Shoulder Load | |
|---|---|---|---|---|
| | PK+1000 | PK-1000 | SH+1000 | SH-1000 |
| Millstone 2 | 940 | 940 | 940 | 940 |
| Millstone 3 | 1276 | 1276 | 1276 | 1276 |
| Middletown 2 | 117 | 117 | 0 | 0 |
| Middletown 3 | 236 | 236 | 0 | 0 |
| Middletown 4 | 400 | 400 | 0 | 400 |
| Middletown 10 | 0 | 0 | 0 | 0 |
| Lake Road 1 | 0 | 280 | 0 | 0 |
| Lake Road 2 | 0 | 280 | 0 | 0 |
| Lake Road 3 | 0 | 0 | 0 | 0 |
| Wallingford 1 | 0 | 0 | 0 | 0 |
| Wallingford 2 | 0 | 0 | 0 | 0 |
| Wallingford 3 | 0 | 0 | 0 | 0 |
| Kleen GT1 | 158 | 158 | 0 | 0 |
| Kleen GT2 | 158 | 158 | 0 | 0 |
| Kleen ST | 318 | 318 | 0 | 0 |
| BE 10 ST | 0 | 0 | 0 | 0 |
| BE 11 | 0 | 0 | 0 | 0 |
| BE 12 | 0 | 0 | 0 | 0 |
| BPTHBR#2 | 0 | 0 | 0 | 0 |
| BPTHBR#3 | 375 | 375 | 0 | 0 |
| DEVGAS11 | 0 | 40 | 0 | 0 |
| DEVGAS12 | 0 | 40 | 0 | 0 |
| DEVGAS13 | 0 | 40 | 0 | 0 |
| DEVGAS14 | 0 | 40 | 0 | 0 |



This document may contain Critical Energy Infrastructure Information -Do Not Release

| Unit | Summer Peak | | Shoulder Load | |
|---|---|---|---|---|
| | PK+1000 | PK-1000 | SH+1000 | SH-1000 |
| MILLFORD 1 | 0 | 0 | 0 | 0 |
| MILLFORD 2 | 0 | 0 | 0 | 0 |
| NORHAR#1 | 0 | 0 | 0 | 0 |
| NORHAR#2 | 0 | 0 | 0 | 0 |
| NH HARBR | 447 | 447 | 447 | 447 |
| CRRRA PF | 0 | 32 | 0 | 0 |
| SCRRA PF | 0 | 0 | 0 | 0 |
| Stevenson hydro | 29 | 29 | 29 | 29 |
| MONTV#5 | 81 | 81 | 81 | 81 |
| MONTV#6 | 309 | 0 | 0 | 0 |
| TUNNEL 23 | 0 | 0 | 0 | 0 |
| TUNNEL 69 | 18 | 18 | 18 | 18 |
| AESTH PF | 180 | 180 | 180 | 180 |
| LISBN PF | 0 | 0 | 0 | 0 |
| EXT-TIRE | 26 | 26 | 26 | 26 |
| Wind Project #145, 115kV 1607 Line | 0 | 54 | 0 | 0 |
| GT Project #125, Cos Cob 115kV Substation | 0 | 0 | 0 | 0 |
| GT Project #104, Waterside 115kV Substation | 0 | 0 | 0 | 0 |
| GT Project #140, Wallingford 115kV Substation | 0 | 0 | 0 | 0 |
| GT Project#115, Norwalk 27.6kV Substation | 49 | 0 | 0 | 0 |
| Biomass Project# 150, Fry Brook Substation | 0 | 38 | 0 | 0 |
| GT Project #159, Singer 115kV Substation | 0 | 0 | 0 | 0 |
| GT Project #160, Middletown 115kV Substation | 0 | 86 | 0 | 43 |
| GT Project #161, Devon 115kV Substation | 50 | 50 | 0 | 0 |
| GT Project #161, Middletown 115kV Substation | 0 | 0 | 112 | 112 |
| GT Project #161, Middletown 345kV Substation | 0 | 112 | 0 | 112 |
| GT Project #161, Montville 345 kV Substation | 332 | 332 | 0 | 0 |
| GT Project #175 #182, Long Mountain-Plumtree 345kV | 212 | 212 | 212 | 212 |
| GT/Hydro Project #186, Shepaug 115kV Substation | 100 | 100 | 100 | 100 |
| GT Project #190, Stevenson 115kV Substation | 50 | 50 | 50 | 50 |
| **Interface** | | | | |
| CT Import | 2568 | 2384 | 2375 | 1885 |
| SWCT | 3384 | 3278 | 2567 | 2572 |



This document may contain Critical Energy Infrastructure Information -Do Not Release

| Unit | Summer Peak | | Shoulder Load | |
|---|---|---|---|---|
| | **PK+1000** | **PK-1000** | **SH+1000** | **SH-1000** |
| NY-NE | 999 | -1004 | 998 | -1003 |
| NWSTF | 1413 | 1464 | 1005 | 1005 |



This document may contain Critical Energy Infrastructure Information -Do Not Release

Section

5

# Line out Testing (N-2)

The N-2 testing was performed on a shoulder load level case with NE exporting 1000 MW to NY, with and without the Project.

The following lines were taken out-of-service in the N-2 testing:

## 5.1 Without Project

1. Frost Bridge - Campville 1191 Line
2. Frost Bridge – Carmel Hill 1238 Line
3. Thomaston - Campville 1921 Line

## 5.2 With Project -- Line 1238 (Frost Bridge - Carmel Hill) option

1. Frost Bridge - Campville 1191 Line
2. New ring bus to Frost Bridge
3. New ring bus to Carmel Hill

## 5.3 With Project -- Line 1191 (Frost Bridge – Campville) option

1. New tap point - Campville
2. Thomaston - Campville 1921 Line



This document may contain Critical Energy Infrastructure Information -Do Not Release

Section

6

# N-1 Thermal and Voltage Analysis Results

Thermal and voltage analysis was performed to determine the thermal and voltage impacts of the Project on the performance of the power system within the study area. The scenarios described in Section 4 were evaluated to identify the Project impact.

The steady state analysis results are presented in this section.

## 6.1 Project Impact in N-1 Contingency Conditions

AC contingency (N-1) analysis was performed on cases with the project and without the project for each of the scenarios described in Section 4. Post-contingency loadings and voltages were compared to identify significant impacts due to the project. This section summarizes the results of contingency analysis performed using the models, criteria and methodology described in Sections 2, 3 and 4. For thermal analysis, a facility that violates thermal criteria and has an impact greater than 1% is considered significant. For voltage analysis, buses that violate voltage criteria and have impacts greater than 0.01 p.u. are considered significant.

In Appendix D, detailed results of thermal and voltage impacts for the study are listed. These results include all lines with thermal loading of 95% and above and all bus voltages that violate voltage criteria.

## 6.2 Thermal and Voltage Impacts

### 6.2.1 2010 Summer Peak Case, NE is importing 1000 MW from NY

The project has no significant thermal and voltage impact for this load scenario.



This document may contain Critical Energy Infrastructure Information -Do Not Release

### 6.2.2 2010 Summer Peak Case, NE is exporting 1000 MW to NY

**Table 6-1. Thermal Impacts with Unit Tapping Line 1191**

| Monitored Element | LTE Rating MVA | Without Project Loading % | With Project Loading % | Project Impact % | Contingency |
|---|---|---|---|---|---|
| 73244 N.BLMFLD 115.00<br>73288 NESMBY 115.00 1 | 221 | 98.6 | 100.3 | 1.7 | BASE CASE |

**Table 6-2. Thermal Impacts with Unit Tapping Line 1238**

| Monitored Element | LTE Rating MVA | Without Project Loading % | With Project Loading % | Project Impact % | Contingency |
|---|---|---|---|---|---|
| 73244 N.BLMFLD 115.00<br>73288 NESMBY 115.00 1 | 221 | 98.6 | 100.5 | 1.9 | BASE CASE |

The project has a thermal violation for this load scenario. The overloaded element is the 115kV 1784 line between Northeast Simsbury and North Bloomfield With the Project in service, the line is loaded to 100.3% or 100.5% of its normal rating under base case scenario without any contingency. The line is loaded to about 98% pre-contingency without the Project. The impact of the Project is about 2%.

The thermal violation can be eliminated by using the 2% series reactor on the 1784 line at North Bloomfield, which is part of the approved Frost Bridge autotransformer project and will be in service the same time with the Middletown – Norwalk project. With the Project and the 2% series reactor in service, the loadings of the 1784 line are reduced to 91% for both interconnection options. Therefore, the Project has no significant thermal impact for this load scenario.

The project has no significant voltage impact for this load scenario.

### 6.2.3 2010 Shoulder Case, NE is importing 1000 MW from NY

The project has no significant thermal or voltage impact for this load scenario.

### 6.2.4 2010 Shoulder Case, NE is exporting 1000 MW to NY

The project has no significant thermal or voltage impact for this load scenario.



This document may contain Critical Energy Infrastructure Information -Do Not Release

Section

7

# N-2 Thermal and Voltage Analysis Results

Line out (N-2) testing involved running a set of power flow cases, each modeled with a pre-defined line outage, against the entire contingency list from the N-1 study. The N-2 testing is an operational check to ensure that necessary system adjustments can be made by operators following a first contingency and prior to a second contingency. The test specifically addresses the amount of generation which must be increased or decreased to prevent thermal overloads due to a second contingency.

The analysis for N-2 testing was performed on the shoulder load level case with NE exporting 1000MW to NY.

In Appendix E, detailed results of N-2 thermal and voltage impacts for the study are listed. These results include all lines with thermal loading of 95% and above and all bus voltages that violate voltage criteria.

## 7.1 N-2 Thermal and Voltage Impacts with Project Tapping Line 1238

### 7.1.1 Line out - Frost Bridge - Campville 1191 Line

**Table 7-1. Thermal Impacts**

| Monitored Element | LTE Rating MVA | Without Project Loading % | With Project Loading % | Project Impact % | Contingency |
|---|---|---|---|---|---|
| 73234 CHIPP TP 115.00 73235 CHIP HIL 115.00 CKT 1 | 192 | 100.1 | 109.5 | 9.4 | 1784LINE |
| 73234 CHIPP TP 115.00 73235 CHIP HIL 115.00 CKT 1 | 192 | 100 | 109.5 | 9.5 | NBLMFBR22T |

The Chippen Hill– Chippen Hill Tap 115 kV line shows an impact above 1% with line loading above 100%. The project has significant thermal impact for this load scenario.

The thermal violation problem could be resolved by re-dispatching the local generation units. The original Project dispatch against 22MW Franklin Drive (Bus 73543) and 13MW Forest PF



This document may contain Critical Energy Infrastructure Information -Do Not Release

(Bus 73536) can be replaced by 13MW Forest PF (Bus 73536) and 13MW South Meadow (Bus 73546). The thermal impacts after re-dispatch are shown below.

**Table 7-2. Thermal Impacts After Re-dispatch**

| Monitored Element | LTE Rating MVA | Without Project Loading % | With Project Loading % | Project Impact % | Contingency |
|---|---|---|---|---|---|
| 73234 CHIPP TP 115.00 73235 CHIP HIL 115.00 CKT 1 | 192 | 100.1 | 100 | -0.1 | 1784LINE |
| 73234 CHIPP TP 115.00 73235 CHIP HIL 115.00 CKT 1 | 192 | 100 | 100 | 0 | NBLMFBR22T |

The project has no significant voltage impact for the line out scenario.

### 7.1.2 Line out – New ring bus to Frost Bridge

The project has no significant thermal or voltage impact for this line out scenario.

### 7.1.3 Line out - New ring bus to Carmel Hill

The project has no significant thermal or voltage impact for this line out scenario.

## 7.2 N-2 Thermal and Voltage Impacts with Project Tapping Line 1191

### 7.2.1 Line out - New tap point – Campville

**Table 7-3. Thermal Impacts**

| Monitored Element | LTE Rating MVA | Without Project Loading % | With Project Loading % | Project Impact % | Contingency |
|---|---|---|---|---|---|
| 73234 CHIPP TP 115.00 73235 CHIP HIL 115.00 CKT 1 | 192 | 100.1 | 109.5 | 9.4 | 1784LINE |
| 73234 CHIPP TP 115.00 73235 CHIP HIL 115.00 CKT 1 | 192 | 100 | 109.5 | 9.5 | NBLMFBR22T |

The Chippen Hill– Chippen Hill Tap 115 kV line shows an impact above 1% with line loading above 100%. The project has significant thermal impact for this load scenario.



This document may contain Critical Energy Infrastructure Information -Do Not Release

The thermal violation problem could be resolved by re-dispatching the local generation units. The original Project dispatch against 22MW Franklin Drive (Bus 73543) and 13MW Forest PF (Bus 73536) can be replaced by 13MW Forest PF (Bus 73536) and 13MW South Meadow (Bus 73546). The thermal impacts after re-dispatch are shown below.

**Table 7-4. Thermal Impacts After Re-dispatch**

| Monitored Element | LTE Rating MVA | Without Project Loading % | With Project Loading % | Project Impact % | Contingency |
|---|---|---|---|---|---|
| 73234 CHIPP TP 115.00 73235 CHIP HIL 115.00 CKT 1 | 192 | 100.1 | 100 | -0.1 | 1784LINE |
| 73234 CHIPP TP 115.00 73235 CHIP HIL 115.00 CKT 1 | 192 | 100 | 100 | 0 | NBLMFBR22T |

### 7.2.2 Line out – Thomaston - Campville 1921 Line

The project has no significant thermal or voltage impact for this line out scenario.



This document may contain Critical Energy Infrastructure Information -Do Not Release

Section

8

# Transfer Limit Analysis

The initial interface flows, limiting flows and the limiting element contingency pair for the SWCT interfaces are shown in the Tables 8-1 and 8-2. The detailed PSS™ MUST output results are provided in Appendix F. In Tables 8-1 and 8-2, the C case is where the project is off, the competing generation unit is turned off and the area swing picks up the imbalance.

There were several modifications with the base case and contingency list for the transfer analysis. The changes are listed below.

- The correction for Wilton-Peaceable area 115kV network was included
- The contingency file has been updated to include the corrected Norwalk (post M-N) breaker failure contingencies and the Wilton-Peaceable contingencies.
- The Frost Bridge Autotransformer project was added to the load flow case

The Frost Bridge Autotransformer project was approved after Project #191 made the interconnection request. However, the Frost Bridge project will be in service together with the Middletown – Norwalk project. So the Frost Bridge Autotransformer project is expected to be online before the Biomass Project #191 and therefore being modeled in this transfer study cases.

Only the peak load and shoulder load scenarios with NY exporting 0 MW to NE were studied in this analysis.

The following Connecticut generation units are in service for all the study cases.

- Bridgeport RESCO (73650)
- AES Thames (73538)
- BH#3 (73648)
- Millstone 2 (73562)
- Millstone 3 (73563)
- Milford 1 (73574)
- Milford 2 (73575)
- BE 1 (73652)
- BE 2 (73653)
- BE 3 (73654)

The maximum power transfer level is set accordingly such that the transfer sinks will not have negative real power output.



This document may contain Critical Energy Infrastructure Information -Do Not Release

## 8.1 Project connected to the 1191 Line

The initial interface flows, the most limiting flows and the limiting element contingency pair for the SWCT interface with the Project tapping line 1191 are shown in the Table 8-1.

**Table 1. Project Impact on Transfer Limit of SWCT Interface (MW) with line tapping at #1191**

| Case | Initial Base Flow | Without Project | With Project Against Competing Generators | Project Impact | Competing Generators Off, Against Swing | Competing Generators Off Impact |
|---|---|---|---|---|---|---|
| **Column Design.** | | **A** | **B** | **B-A** | **C** | **C-A** |
| 2010 PK (NY-NE=0) | 2248 | 3708[1] | 3686[1] | -22 | 3749[1] | 41 |

[1] Limited by Shaws Hill –Bunker Hill 115 kV for contingency FROSTBR27T

The project has a maximum negative impact of 22 MW on the SWCT interface. This occurs for the peak load scenario with the limiting element being the Shaws Hill – Bunker Hill 115 kV line for contingency FROSTBR27T at a transfer limit of 3686MW. The shoulder load scenario is not shown in the table as there was no limiting element within the maximum transfer level.

## 8.2 Project connected to the 1238 Line

The initial interface flows, the most limiting flows and the limiting element contingency pair for the SWCT interface with the Project tapping line 1238 are shown in the Table 8-2.

**Table 2. Project Impact on Transfer Limit of SWCT Interface (MW) with line tapping at #1238**

| Case | Initial Base Flow | Without Project | With Project Against Competing Generators | Project Impact | Competing Generators Off, Against Swing | Competing Generators Off Impact |
|---|---|---|---|---|---|---|
| **Column Design.** | | **A** | **B** | **B-A** | **C** | **C-A** |
| 2010 PK (NY-NE=0) | 2248 | 3708[1] | 3685[1] | -23 | 3749[1] | 31 |

[1] Limited by Shaws Hill –Bunker Hill 115 kV for contingency FROSTBR27T

The project has a maximum negative impact of 23 MW on the SWCT interface. This occurs for the peak load scenario with the limiting element being the Shaws Hill – Bunker Hill 115 kV line for contingency FROSTBR27T at a transfer limit of 3685 MW. The shoulder load



This document may contain Critical Energy Infrastructure Information -Do Not Release

scenario is not shown in the table as there was no limiting element within the maximum transfer level.

The study results show that the project has a maximum negative impact of 23MW on the SWCT interface. This occurs for the peak load scenario with the limiting element being the Shaws Hill – Bunker Hill 115 kV line for contingency FROSTBR27T at a transfer limit of 3685MW.

In this transfer level (3685MW), there are only about 100 MW machines in service in SWCT. It is considered as an unrealistic scenario. Base on this fact, the negative 23 MW impact will not be considered a significant impact for the project.



This document may contain Critical Energy Infrastructure Information -Do Not Release

Section

9

# Short Circuit Results

The short circuit impact study reports from NU and UI are included in this section.



This document may contain Critical Energy Infrastructure Information -Do Not Release

# Proposed Interconnection Project - ISO-NE Queue #191

## Short Circuit System Impact Study

Prepared By: Michael F. Kenny
Date: November 5, 2007

## Scope

This study evaluates the affect of the proposed ISO-NE #191 project on the Northeast Utilities system available fault current levels. Scenarios with and without the projects were studied in order to evaluate the impact of the project on the short circuit duty of Northeast Utilities circuit breakers. A short circuit study scope document for this project was provided by ISO New England. The study scope used is titled "Short Circuit Study Scope of the proposed Biomass 32MW project #191 tapping 115kV Line 1191 or Line 1238 near the Frost Bridge 115 kV Station" dated October 8, 2007. A brief overview of the proposed interconnection studied is provided below.

Two115kV interconnection options are being considered by the Developer:

Option 1- The 1238 Line between Frost Bridge (8R) - Carmel Hill (11S)

Option 2- The 1191 Line between Frost Bridge (8R) - Campville (14R)

The Project includes one steam turbine rated at 50 MVA, 13.8 kV, and 0.85 power factor lagging coupled to a biomass fired boiler. In both interconnection options, the generating unit will be connected to the CL&P's 115 kV transmission network by way of a generator step-up (GSU) transformer rated 30/50 MVA OA/FOA,13.8/118 kV and an overhead feeder.

## Transmission and Generation Configuration

The short circuit studies for this project will include all existing and expected generation as required by ISO-NE and NEPOOL criteria.

## Circuit Breaker Rating Standards

This study was performed in accordance with appropriate IEEE C37 standards and each circuit breaker's specific design. The ASPEN Circuit Breaker Rating Module was used to calculate the circuit breaker duties and ratings.

## Criteria

Northeast Utilities (NU) requires that no circuit breaker shall be operated in excess of 100 percent of fault interrupting duty rating for that circuit breaker.



This document may contain Critical Energy Infrastructure Information -Do Not Release

## Results

The results of this study are provided in Tables 1, 2 and 3 below.

Table 1 provides the circuit breaker interrupting duty results at substations that are in the vicinity of the proposed generation project.

Table 2 provides a list of post project circuit breakers on the NU system that have a interrupting duty of 95% or above and are not part of an approved replacement project. These circuit breakers are becoming closer to their interrupting rating with the continued addition of generation to the system.

Circuit breakers with an interrupting duty of 95% or above may lack sufficient margin to absorb individually small but cumulative increases in fault current and circuit breaker interrupting duty. Factors that could affect circuit breaker interrupting duty margin include:

- Foreign System Growth
  Power system growth or reconfiguration outside of the NU system that results in increased fault current within the NU system

- Regulatory Changes
  Any unforeseen direction by ISO-NE or other regulatory agency dictating the use of a different methodology that is used today to calculate circuit breaker duty

- Best Available Data
  The ASPEN model used in this study includes the best available impedance data for the new auto transformers planned for East Devon 2X, Barbour Hill 1X and Norwalk 9X. The impedance data used for these transformers is based on the preliminary design as provided by the transformer manufacturer. As the “As-Built” impedance data for these transformers can vary, a detrimental effect on the already tight circuit breaker interrupting duty margins at East Devon is possible. Also, certain older oil circuit breakers, including the 69kV Montville 31T are modeled using the best available data.

- Software Tools
  Accuracy and any unforeseen revision of software tools used to evaluate circuit breaker duty, the ASPEN OneLiner and Breaker Rating Modules.

Table 2 shows that this project reduces the interrupting duty margin of some Southington (4C) 115kV circuit breakers that already have small interrupting duty margins.



This document may contain Critical Energy Infrastructure Information -Do Not Release

Table 3 shows that the Midway (19B) substation circuit breakers 7T, 8T, 10T, 11T and 12T circuit breakers are over-dutied both pre and post the ISO-NE #190 project connecting at Tunnel substation. These circuit breakers are over-dutied due to a previously proposed generator interconnect project, the ISO-NE #190 interconnection project connecting to the Mount Tom (22C) substation.

## Conclusion

The circuit breaker interrupting duty results provided in Tables 1, 2 and 3 show that the proposed ISO-NE #191 interconnection project does not specifically cause any circuit breakers to be over-dutied on the NU system. However, the project does reduce the interrupting duty margin of some circuit breakers that already have small interrupting duty margins, particularly at the Southington (4C) 115kV substation.



This document may contain Critical Energy Infrastructure Information -Do Not Release

Table 1 Study Results for ISO-NE Queue #191 Interconnection Project

| Substation & Voltage | Breaker Nomenclature | Option #2 Post Project Breaker Duty (%) | Option #1 Post Project Breaker Duty (%) | Pre Project Breaker Duty (%) |
|---|---|---|---|---|
| BALDWIN 13F 115.kV | 13F-2T-S | 43.5 | 43.3 | 43.2 |
| | 13F-2T-2 | 54.2 | 53.9 | 53.8 |
| Bates Rock 21K 115.kV | 21K-1T-2 | 26.7 | 26.7 | 26.6 |
| Beacon Falls 11N 115.kV | 1570-11N-2 | 12.6 | 12.5 | 12.5 |
| | 1575-11N-2 | 12.6 | 12.5 | 12.5 |
| BUNKER HILL 12B 115.kV | 12B-1T-2 | 49.1 | 48.7 | 48.3 |
| | 12B-2T-2 | 38.1 | 37.8 | 37.6 |
| | 12B-3T-2 | 49.1 | 48.7 | 48.3 |
| CAMPVILLE 14R 115.kV | 14R-1T-2 | 45.6 | 36 | 36 |
| | 14R-2T-2 | 40.4 | 29.8 | 29.7 |
| | 14R-3T-2 | 43.8 | 34.2 | 34.1 |
| | 14R-4T-2 | 46.7 | 37.1 | 37 |
| CANTON 5R 115.kV | 5R-10K-2 | 27 | 25.9 | 25.8 |
| | 5R-1T-2 | 27 | 25.9 | 25.8 |
| | 5R-2T-2 | 27 | 25.9 | 25.8 |
| East Devon 8G 345.kV | 8G-11T-2 | 53.9 | 53.9 | 53.9 |
| | 8G-12T-2 | 59.7 | 59.7 | 59.6 |
| | 8G-5T-2 | 59.7 | 59.7 | 59.6 |
| | 8G-6T-2 | 59.7 | 59.7 | 59.6 |
| | 8G-7T-2 | 55.1 | 55.1 | 55.1 |
| | 8G-8T-2 | 59.7 | 59.7 | 59.6 |
| | 8G-9T-2 | 59.7 | 59.7 | 59.6 |
| East Devon 8G 115.kV | 8G-1X3-2 | 98 | 98 | 98 |
| | 8G-23T-2 | 93.7 | 93.7 | 93.6 |
| | 8G-24T-2 | 74.3 | 74.3 | 74.3 |
| | 8G-25T-2 | 93.7 | 93.7 | 93.6 |
| | 8G-26T-2 | 93.7 | 93.7 | 93.6 |
| | 8G-27T-2 | 93.7 | 93.7 | 93.6 |
| | 8G-2X3-2 | 98 | 98 | 98 |
| Falls Village 9A 69.kV | 667-9A | 43.6 | 43.5 | 43.5 |
| | 694-9A | 38.7 | 38.6 | 38.6 |



This document may contain Critical Energy Infrastructure Information -Do Not Release

Table 1 Study Results for ISO-NE Queue #191 Interconnection Project

| Substation & Voltage | | | Breaker Nomenclature | Option #2 Post Project Breaker Duty (%) | Option #1 Post Project Breaker Duty (%) | Pre Project Breaker Duty (%) |
|---|---|---|---|---|---|---|
| Forestville | 12A | 115.kV | 12A-1T-2 | 71.1 | 71.1 | 71 |
| | | | 12A-2T-2 | 71.1 | 71.1 | 71 |
| Freight | 11W | 115.kV | 11W-1T-2 | 78.6 | 78.2 | 77.1 |
| | | | 11W-2T-2 | 77.5 | 77.1 | 76 |
| Franklin Drive | 1B | 115.kV | 1B-10K-2 | 30.8 | 27.2 | 27.2 |
| | | | 1B-1T-2 | 30.8 | 27.2 | 27.2 |
| Frost Bridge | 8R | 115.kV | 84-10K-2 | 52.4 | 51.9 | 50.8 |
| | | | 8R-14T-2 | 53.9 | 49.9 | 49 |
| | | | 8R-15T-2 | 50.9 | 47.3 | 46.6 |
| | | | 8R-16T-2 | 52.4 | 51.4 | 50.8 |
| | | | 8R-1X2-2 | 39.3 | 38.3 | 37.6 |
| | | | 8R-20T-2 | 60.8 | 62.8 | 58.9 |
| | | | 8R-21T-2 | 49.3 | 50.9 | 47.7 |
| | | | 8R-22T-2 | 52.4 | 51.4 | 50.8 |
| | | | 8R-23T-2 | 56.2 | 55.2 | 54.5 |
| | | | 8R-24T-2 | 52.4 | 51.4 | 50.8 |
| | | | 8R-26T-2 | 55.2 | 54.2 | 53.6 |
| | | | 8R-27T-2 | 52.1 | 51.2 | 50.6 |
| | | | 8R-28T-2 | 52.4 | 51.4 | 50.8 |
| | | | 8R-2X2-2 | 39.3 | 38.3 | 37.6 |
| Frost Bridge | 8R | 345.kV | 8R-1T-2 | 26.3 | 26.3 | 26.3 |
| Long Mountain | 13J | 345.kV | 13J-4T-2 | 46.6 | 46.5 | 46.5 |
| | | | 13J-5T-2 | 39.3 | 39.3 | 39.2 |
| | | | 13J-6T-2 | 60.8 | 60.8 | 60.7 |
| | | | 13J-7T-2 | 46.6 | 46.5 | 46.5 |
| | | | 13J-8T-2 | 46.6 | 46.5 | 46.5 |
| | | | 13J-9T-2 | 46.6 | 46.5 | 46.5 |
| Middle River | 28M | 115.kV | 28M-1T-2 | 53 | 53.1 | 52.9 |
| | | | 28M-2T-2 | 89 | 89.1 | 88.9 |



This document may contain Critical Energy Infrastructure Information -Do Not Release

Table 1 Study Results for ISO-NE Queue #191 Interconnection Project

| Substation & Voltage | | | Breaker Nomenclature | Option #2 Post Project Breaker Duty (%) | Option #1 Post Project Breaker Duty (%) | Pre Project Breaker Duty (%) |
|---|---|---|---|---|---|---|
| Millstone | 15G | 345.kV | 15G-13T-2 | 78.9 | 78.9 | 78.9 |
| | | | 15G-14T-2 | 97.2 | 97.2 | 97.2 |
| | | | 15G-15T-2 | 78.6 | 78.6 | 78.6 |
| | | | 15G-1T-2 | 82.9 | 82.9 | 82.9 |
| | | | 15G-2T-2 | 78.6 | 78.6 | 78.6 |
| | | | 15G-4T-2 | 82.9 | 82.9 | 82.9 |
| | | | 15G-5T-2 | 82.7 | 82.7 | 82.7 |
| | | | 15G-7T-2 | 82.9 | 82.9 | 82.9 |
| | | | 15G-8T-2 | 77.7 | 77.7 | 77.7 |
| | | | 15G-9T-2 | 82.7 | 82.7 | 82.7 |
| MONTVILLE | 4J | 69.kV | 4J-16X3-2 | 60.6 | 60.6 | 60.6 |
| | | | 4J-180-2 | 43.3 | 43.3 | 43.3 |
| | | | 4J-31T-2 | 99.4 | 99.4 | 99.4 |
| MONTVILLE | 4J | 345.kV | 4J-1T-2 | 57.8 | 57.8 | 57.8 |
| MONTVILLE | 4J | 115.kV | 4J-10K-2 | 97 | 97 | 97 |
| | | | 4J-10T-2 | 96 | 96 | 95.9 |
| | | | 4J-11T-2 | 83.2 | 83.2 | 83.2 |
| | | | 4J-12T-2 | 69.1 | 69.1 | 69.1 |
| | | | 4J-13T-2 | 92.2 | 92.2 | 92.2 |
| | | | 4J-14T-2 | 93.2 | 93.2 | 93.2 |
| | | | 4J-15T-2 | 93.2 | 93.2 | 93.2 |
| | | | 4J-16T-2 | 90.6 | 90.6 | 90.6 |
| | | | 4J-17T-2 | 93.2 | 93.2 | 93.2 |
| | | | 4J-18T-2 | 93.2 | 93.2 | 93.2 |
| | | | 4J-18X3-2 | 95.8 | 95.8 | 95.8 |
| | | | 4J-19T-2 | 91.5 | 91.5 | 91.4 |
| | | | 4J-19X3-2 | 95.8 | 95.8 | 95.8 |
| | | | 4J-20T-2 | 92.8 | 92.8 | 92.8 |
| | | | 4J-21T-2 | 92.8 | 92.8 | 92.8 |
| | | | 4J-22T-2 | 91.1 | 91.1 | 91.1 |
| | | | 4J-23T-2 | 93.2 | 93.2 | 93.2 |
| | | | 4J-24T-2 | 93.2 | 93.2 | 93.2 |
| | | | 4J-4T-2 | 87.1 | 87.1 | 87.1 |
| | | | 4J-5T-2 | 87.1 | 87.1 | 87.1 |
| | | | 4J-7T-2 | 92.7 | 92.7 | 92.7 |
| | | | 4J-8T-2 | 92.7 | 92.7 | 92.7 |
| | | | 4J-9T-2 | 89.1 | 89.1 | 89.1 |



This document may contain Critical Energy Infrastructure Information -Do Not Release

Table 1 Study Results for ISO-NE Queue #191 Interconnection Project

| Substation & Voltage | Breaker Nomenclature | Option #2 Post Project Breaker Duty (%) | Option #1 Post Project Breaker Duty (%) | Pre Project Breaker Duty (%) |
|---|---|---|---|---|
| North Bloomfield 2A 115.kV | 1836-2A-36 | 80.7 | 80.4 | 80.4 |
| | 2A-10K-2 | 87.5 | 87.1 | 87.1 |
| | 2A-12T-2 | 55.5 | 55.3 | 55.3 |
| | 2A-13T-2 | 50.8 | 50.5 | 50.5 |
| | 2A-14T-2 | 55.5 | 55.3 | 55.3 |
| | 2A-18T-2 | 55.5 | 55.3 | 55.3 |
| | 2A-19T-2 | 51.6 | 51.4 | 51.4 |
| | 2A-20K-2 | 87.5 | 87.1 | 87.1 |
| | 2A-20T-2 | 51.6 | 51.4 | 51.4 |
| | 2A-21T-2 | 55.5 | 55.3 | 55.3 |
| | 2A-22T-2 | 52.3 | 52.1 | 52.1 |
| | 2A-23T-2 | 55.5 | 55.3 | 55.3 |
| | 2A-3X1-2 | 87.5 | 87.1 | 87.1 |
| | 2A-5X3-2 | 55.5 | 55.3 | 55.3 |
| | 2A-7X3-2 | 55.5 | 55.3 | 55.3 |
| PLUMTREE 30G 115.kV | 30G-1X3-2 | 51.5 | 51.6 | 51.4 |
| | 30G-23T-2 | 81.1 | 81.3 | 81 |
| | 30G-24T-2 | 55.4 | 55.5 | 55.3 |
| | 30G-25T-2 | 51.5 | 51.6 | 51.4 |
| | 30G-26T-2 | 49.7 | 49.7 | 49.7 |
| | 30G-27T-2 | 51.5 | 51.6 | 51.4 |
| | 30G-28T-2 | 51.5 | 51.6 | 51.4 |
| | 30G-29T-2 | 46.8 | 47 | 46.8 |
| | 30G-2X3-2 | 51.5 | 51.6 | 51.4 |
| | 30G-30T-2 | 55.4 | 55.5 | 55.3 |
| | 30G-31T-2 | 51.5 | 51.6 | 51.4 |
| | 30G-32T-2 | 50.9 | 51.1 | 50.9 |
| PLUMTREE 30G 345.kV | 30G-1T-2 | 47.3 | 47.3 | 47.3 |
| | 30G-2T-2 | 46.4 | 46.4 | 46.4 |
| | 30G-3T-2 | 47.3 | 47.3 | 47.3 |
| | 30G-4T-2 | 47.3 | 47.3 | 47.3 |
| | 30G-5T-2 | 47.3 | 47.3 | 47.3 |
| | 30G-7T-2 | 47.3 | 47.3 | 47.3 |
| | 30G-9T-2 | 47.3 | 47.3 | 47.3 |
| Rocky River 12Y 115.kV | 12Y-10K-2 | 23.5 | 25.8 | 23.4 |
| | 12Y-1T-2 | 22.7 | 24.9 | 22.6 |
| | 12Y-2T-2 | 43.7 | 47.9 | 43.6 |
| | 1813-12Y-2 | 14.3 | 14.3 | 14.3 |



This document may contain Critical Energy Infrastructure Information -Do Not Release

Table 1 Study Results for ISO-NE Queue #191 Interconnection Project

| Substation & Voltage | Breaker Nomenclature | Option #2 Post Project Breaker Duty (%) | Option #1 Post Project Breaker Duty (%) | Pre Project Breaker Duty (%) |
|---|---|---|---|---|
| South Naugutuck 21L 115.kV | 21L-1T-2 | 19.1 | 19.1 | 19.1 |
| Salsbury 21J 69.kV | 21J-1T-2 | 7.3 | 7.2 | 7.2 |
| Southington 4C 115.kV | 4C-11T-2 | 98.9 | 99 | 98.7 |
| | 4C-12T-2 | 96 | 96.1 | 95.8 |
| | 4C-13T-2 | 62.5 | 62.5 | 62.3 |
| | 4C-14T-2 | 94.9 | 94.9 | 94.6 |
| | 4C-15T-2 | 62.8 | 62.9 | 62.7 |
| | 4C-16T-2 | 65.2 | 65.2 | 65.1 |
| | 4C-17T-2 | 65.2 | 65.2 | 65.1 |
| | 4C-18T-2 | 65.3 | 65.3 | 65.1 |
| | 4C-19T-2 | 98.9 | 99 | 98.7 |
| | 4C-20K-2 | 65.3 | 65.3 | 65.1 |
| | 4C-20T-2 | 86.4 | 86.4 | 86.2 |
| | 4C-33T-2 | 65.3 | 65.3 | 65.1 |
| | 4C-9T-2 | 67.4 | 67.4 | 67.2 |
| | 4C-10K-2 | 58.1 | 58.2 | 57.7 |
| | 4C-21T-2 | 57.5 | 57.6 | 57.3 |
| | 4C-22T-2 | 57.9 | 58 | 57.7 |
| | 4C-23T-2 | 57.8 | 57.8 | 57.6 |
| | 4C-24T-2 | 57.7 | 57.7 | 57.5 |
| | 4C-25T-2 | 57.4 | 57.5 | 57.2 |
| | 4C-26T-2 | 55 | 55.1 | 54.7 |
| | 4C-28T-2 | 55.1 | 55.1 | 54.8 |
| | 4C-29T-2 | 57.9 | 58 | 57.7 |
| | 4C-30T-2 | 57.9 | 58 | 57.7 |
| | 4C-31T-2 | 57.5 | 57.6 | 57.3 |
| | 4C-3X3-2 | 58.1 | 58.2 | 57.7 |
| SHAWS HILL 24H 115.kV | 24H-1T-2 | 49.9 | 49.4 | 49 |
| SHEPAUG 13A 69.kV | 13A-1X1-2 | 54.4 | 54.5 | 54.4 |
| | 13A-21X-2 | 37.2 | 37.2 | 37.1 |
| SHEPAUG 13A 115.kV | 1887-13A-2 | 51.5 | 51.8 | 51.5 |



This document may contain Critical Energy Infrastructure Information -Do Not Release

Table 1 Study Results for ISO-NE Queue #191 Interconnection Project

| Substation & Voltage | Breaker Nomenclature | Option #2 Post Project Breaker Duty (%) | Option #1 Post Project Breaker Duty (%) | Pre Project Breaker Duty (%) |
|---|---|---|---|---|
| Southington 4C 345.kV | 4C-1T-2 | 58.2 | 58.2 | 58.1 |
| | 4C-3T-2 | 58.2 | 58.2 | 58.1 |
| | 4C-4T-2 | 68.3 | 68.3 | 68.3 |
| | 4C-5T-2 | 58.2 | 58.2 | 58.1 |
| | 4C-6T-2 | 75.3 | 75.4 | 75 |
| | 4C-7T-2 | 57.3 | 57.3 | 57.2 |
| STEVENSON 14A 115.kV | 14A-1T-2 | 32.7 | 32.5 | 32.5 |
| | 14A-2T-2 | 32.7 | 32.5 | 32.5 |
| | 14A-3T-2 | 32.7 | 32.5 | 32.5 |
| | 1560-14A-2 | 35 | 34.8 | 34.8 |
| | 1876-14A-2 | 38.4 | 38.3 | 38.3 |
| | 1990-14A-2 | 51.4 | 51.3 | 51.2 |
| STONY HILL 48C 115.kV | 48C-10K-2 | 47.3 | 47.9 | 47.2 |
| | 48C-1T-2 | 40.3 | 40.4 | 40.3 |
| THOMASTON 2B 115.kV | 2B-2T-2 | 20.1 | 17.1 | 17.1 |
| TODD 30L 115.kV | 30L-1T-2 | 26.1 | 25.9 | 25.8 |
| Torrington Terminal 8A 69.kV | 689-8A-2 | 16.9 | 16.5 | 16.4 |
| | 693-8A-2 | 15.4 | 15 | 15 |
| Torrington Terminal 8A 115kV | 8A-1T-2 | 20.9 | 19.6 | 19.5 |
| TRIANGLE 11A 115.kV | 11A-2T-2 | 61.8 | 61.9 | 61.7 |
| | 11A-3T-2 | 61.8 | 61.9 | 61.7 |
| | 11A-4T-2 | 61.8 | 61.9 | 61.7 |
| | 11A-5T-2 | 50.5 | 50.6 | 50.4 |
| West Brookfield 14H 115.kV | 14H-1T-2 | 21.3 | 21.3 | 21.3 |



This document may contain Critical Energy Infrastructure Information -Do Not Release

Table 2 Circuit Breakers with their Interrupting Duty Above 95 %

| Substation & Voltage | Breaker Nomenclature | Option #2 Post Project Breaker Duty (%) | Option #1 Post Project Breaker Duty (%) | Pre Project Breaker Duty (%) |
|---|---|---|---|---|
| East Devon 8G 115.kV | 8G-1X3-2 | 98 | 98 | 98 |
| | 8G-2X3-2 | 98 | 98 | 98 |
| MILLSTONE 15G 345.kV | 15G-14T-2 | 97.2 | 97.2 | 97.2 |
| MONTVILLE 4J 69.kV | 4J-31T-2 | 99.4 | 99.4 | 99.4 |
| MONTVILLE 4J 115.kV | 4J-10K-2 | 97 | 97 | 97 |
| | 4J-10T-2 | 96 | 96 | 95.9 |
| | 4J-18X3-2 | 95.8 | 95.8 | 95.8 |
| | 4J-19X3-2 | 95.8 | 95.8 | 95.8 |
| Southington 4C 115.kV | 4C-11T-2 | 98.9 | 99 | 98.7 |
| | 4C-19T-2 | 98.9 | 99 | 98.7 |
| | 4C-12T-10 | 96 | 96.1 | 95.8 |

Table 3 Overdutied Circuit Breakers due to a Previous Generator Interconnection Project

| Substation & Voltage | Breaker Nomenclature | Option #2 Post Project Breaker Duty (%) | Option #1 Post Project Breaker Duty (%) | Pre Project Breaker Duty (%) |
|---|---|---|---|---|
| MIDWAY 19B 115.kV | 19B-11T-2 | 107 | 107 | 107 |
| | 19B-12T-2 | 107 | 107 | 107 |
| | 19B-10T-2 | 105.3 | 105.3 | 105.3 |
| | 19B-7T-2 | 105.3 | 105.3 | 105.3 |
| | 19B-8T-2 | 105.6 | 105.6 | 105.6 |



This document may contain Critical Energy Infrastructure Information -Do Not Release

# Short Circuit Study

32MW Biomass Steam Turbine - Generation Project

(Watertown, CT near Frost Bridge 115kV Substation)

ISO-NE Queue# 191

Study of Impact on UI Transmission System

Prepared By: David Bradt

Date: November 13th, 2007

## Scope:

This study evaluates the effect of the proposed project on UI system available fault current levels. Various system configurations have been studied to determine if any UI equipment would become overdutied as a result of this project. The proposed project consists of a new 38MW steam turbine generator coupled to a biomass fired boiler. The generator operates at 13.8kV and is connected to a 13.8kV/115kV GSU which will tap either NU's 1238 or 1191 line via a short 115kV feeder. Both of the interconnection options are within one mile of NU's Frost Bridge Substation.

The developer is currently proposing to place this project in-service after completion of the Middletown-Norwalk (MN) project (currently December 2009). For this reason the project is only studied under *worst case* post-MN system configurations based on its relative position in the ISO-NE queue.

## Criteria and Rating Standards:

This study was performed in accordance with appropriate IEEE C37 standards and each circuit breaker's specific design. This included specific considerations for *Total Current Rated* and *Symmetrical Current Rated* breakers as appropriate. In addition, UI utilizes an internal circuit breaker rating standard TSS 2.8 which serves to define basic study assumptions used by UI. The basic assumptions are as follows:

Pre-Fault Operating Voltage: 119kV for 115kV systems & 357kV for 345kV systems
Maximum Acceptable Interrupting Duty: 100%
Interrupting Ratings: per breaker nameplate and applicable standards (no age correction)

## Generation and Transmission System Configurations:

Based on this project's position in the ISO-NE queue selected system configurations were studied. A Short Circuit Scope document, issued by Siemens Power T&D Inc. on November 2nd, 2007 describes the system configurations to be considered. In accordance with ISO-NE and NEPOOL requirements, short circuit studies must be performed with all available generation in service.



This document may contain Critical Energy Infrastructure Information -Do Not Release

## Assumptions and Study Scenarios:

All technical data for this project, including electrical modeling parameters and general study assumptions, are based on information provided in the Short Circuit Scope document issued by Siemens Power T&D Inc. Although the study scope document describes two interconnection options, this study conservatively assumes the new 115kV feeder connects directly to Frostbridge substation.

## Analysis:

The case presented in the attached table show the effects of this proposed generation interconnection both On-Line and Off-Line. These study results show previously identified overduty conditions at two (2) UI substations, however, the addition of this proposed project does not specifically cause any new overduty conditions on the UI system.

## Study Conclusions

These study results continue to show eroding short circuit margins at several locations along with previously identified overduty conditions around the UI system. However, this project has a small impact on UI fault duties and no overduty conditions are caused specifically by this project.

## General Study Notes:

1) **Step Change in UI SC Duties**
   On June 15th 2007 UI rolled out an updated Transmission System Short Circuit Model as the product of an extensive data verification effort spanning two years. This update results in higher quality modeling results and revealed a measurable step change in fault duties around the UI system. A direct comparison of fault studies performed before and after this modeling update can be made using the Post Middletown 12-13 study results (dated 2-14-07) and the Pre-Montville 7 & 8 study results (dated 6-20-07).

2) **Pequonnock Overduty / Interim Mitigation measures (BHS#2 OFF-Line):**
   Pequonnock Substation's Circuit breakers are projected to be overdutied prior to this project's relative in service queue position. The overduty conditions are described in the *BEII Short Circuit study issued by UI on December, 19th 2007.* UI is currently studying short and long term solution options to address this condition.

   As a result of the projected overduty condition at Pequonnock, UI in coordination with ISO-NE devised a method to allow continued study of proposed generator interconnection projects while solutions are developed and implemented. The method involves an adjustment to projected baseline fault duties at Pequonnock considering Bridgeport Harbor Station #2 as OFF-Line. BHS#2 was selected since its periodic activation will be used as a trigger to implement a temporary operating procedure whose purpose will be to keep Pequonnock fault duties within acceptable levels while long term solutions are implemented. The temporary operating procedure will provide at least as much margin as that achieved when BHS#2 is off-line. In addition, long term solutions under consideration are expected to provide significantly more margin than any of the proposed interim solutions.



This document may contain Critical Energy Infrastructure Information -Do Not Release

**SHORT CIRCUIT EFFECTS ON UI TRANSMISSION CIRCUIT BREAKERS**

**Watertown 32MW Biomass ST near Frost Bridge 115kV Station - Generating Project**

**ISO-NE Queue#191**

| SUBSTATION | BREAKER ID | [1] [3] BREAKER RATING (A) | [2] BREAKER DUTY (%) Proposed Generator | | | | | Notes |
|---|---|---|---|---|---|---|---|---|
| | | | TEMPORARY "Pre-MN" [5] | | PERMANENT "Post-MN" [5] | | | |
| | | | N/A | N/A | OFF | ON | [4] ON BHS2 OFF | |
| ALLNGCR80184 115.kV | 43E-1T-2 | 40,000 | | | 49.7 | 49.7 | | |
| ALLNGCR80185 115.kV | 43E-2T-2 | 40,000 | | | 49.7 | 49.7 | | |
| ANSONIA 115.kV | 6R-1T-2 | 40,000 | | | 23.2 | 23.2 | | |
| ASH CREEK 115.kV | 9173B | 38,413 | | | 53.1 | 53.1 | | |
| BAIRD 88 115.kV | 8875A | 63,000 | | | 35.5 | 35.5 | | |
| BAIRD 89 115.kV | 8975B | 63,000 | | | 35.4 | 35.4 | | |
| BROADWAY 115.kV | 36B-1T-2 | 40,000 | | | 83.6 | 83.6 | | |
| DEVON 88 115.kV | 16P-1T-2 | 63,000 | | | 78.2 | 78.2 | | |
| DEVON 88 115.kV | 16P-4T-2 | 63,000 | | | 73.0 | 73.0 | | |
| DEVON 89 115.kV | 16P-2T-2 | 63,000 | | | 73.0 | 73.0 | | |
| DEVON 89 115.kV | 16P-3T-2 | 63,000 | | | 81.9 | 81.9 | | |
| EAST SHO 115.kV | 9G-11T-2 | 80,000 | | | 57.8 | 57.9 | | |
| EAST SHO 115.kV | 9G-12T-2 | 80,000 | | | 57.8 | 57.9 | | |
| EAST SHO 115.kV | 9G-13T-2 | 51,975 | | | 89.0 | 89.0 | | |
| EAST SHO 115.kV | 9G-1K-2 | 63,000 | | | 73.4 | 73.5 | | |
| EAST SHO 115.kV | 9G-21T-2 | 51,975 | | | 89.0 | 89.0 | | |
| EAST SHO 115.kV | 9G-22T-2 | 63,000 | | | 73.4 | 73.5 | | |
| EAST SHO 115.kV | 9G-23T-2 | 51,975 | | | 89.0 | 89.0 | | |
| EAST SHO 115.kV | 9G-2K-2 | 63,000 | | | 73.4 | 73.5 | | |
| EAST SHO 115.kV | 9G-31T-2 | 51,975 | | | 89.0 | 89.0 | | |
| EAST SHO 115.kV | 9G-32T-2 | 80,000 | | | 57.8 | 57.9 | | |
| EAST SHO 115.kV | 9G-33T-2 | 51,975 | | | 89.0 | 89.0 | | |
| EAST SHO 115.kV | 9G-41T-2 | 63,000 | | | 73.4 | 73.5 | | |
| EAST SHO 115.kV | 9G-43T-2 | 80,000 | | | 57.8 | 57.9 | | |
| EAST SHO 115.kV | 9G-51T-2 | 63,000 | | | 73.4 | 73.5 | | |
| EAST SHO 115.kV | 9G-71T-2 | 63,000 | | | 73.4 | 73.5 | | |
| EAST SHO 115.kV | 9G-73T-2 | 63,000 | | | 73.4 | 73.5 | | |
| GRANDAVE 115.kV | GA 7G-1T-2 | 43,723 | | | **98.7** | **98.8** | | **Note 7a** |
| GRANDAVE 115.kV | GA 7G-2T-2 | 43,723 | | | **98.7** | **98.8** | | **Note 7a** |
| GRANDAVE 115.kV | GA 7G-3T-2 | 66,092 | | | 65.3 | 65.3 | | |
| GRANDAVE 115.kV | GA 7G-4T-2 | 63,000 | | | 68.5 | 68.5 | | |
| GRANDAVE 115.kV | GA 7G-5T-2 | 54,388 | | | **95.2** | **95.3** | | **Note 7a** |
| GRANDAVE 115.kV | GA 7G-6T-2 | 54,388 | | | **95.2** | **95.3** | | **Note 7a** |
| GRANDAVE 115.kV | GA 7G-7T-2 | 63,000 | | | 68.5 | 68.5 | | |
| HAWTHORN 115.kV | 10H-1T-2 | 38,413 | | | 28.4 | 28.4 | | |
| IND WELL 115.kV | 47P-1T-2 | 40,000 | | | 23.8 | 23.8 | | |
| JUNE ST 115.kV | 1P-1T-2 | 24,258 | | | 57.6 | 57.6 | | |
| MILL RIV 115.kV | 38M-1T-2 | 50,000 | | | 78.3 | 78.3 | | |
| MILL RIV 115.kV | 38M-2T-2 | 50,000 | | | 78.5 | 78.5 | | |
| MIX AVE 115.kV | 32K-1T-2 | 24,161 | | | 31.6 | 31.6 | | |
| MIX AVE 115.kV | 32K-3X1-2 | 40,000 | | | 32.6 | 32.6 | | |
| NO HAVEN 115.kV | 10A-1K-2 | 40,000 | | | 54.1 | 54.1 | | |
| NO HAVEN 115.kV | 10A-1T-2 | 43,723 | | | 42.7 | 42.7 | | |
| NO HAVEN 115.kV | 10A-2T-2 | 38,413 | | | 56.4 | 56.4 | | |
| OLD TOWN 115.kV | 3N-1T-2 | 24,258 | | | 63.9 | 64.0 | | |
| PEQUONNO 115.kV | 8J-11T-2 | 65,000 | | | **104.6** | **104.6** | **96.1** | **Note 6a** |
| PEQUONNO 115.kV | 8J-12T-2 | 65,000 | | | **104.6** | **104.6** | **96.1** | **Note 6a** |
| PEQUONNO 115.kV | 8J-13T-2 | 65,000 | | | **104.6** | **104.6** | **96.1** | **Note 6a** |
| PEQUONNO 115.kV | 8J-1T-2 | 65,000 | | | **104.6** | **104.6** | **96.1** | **Note 6a** |
| PEQUONNO 115.kV | 8J-21T-2 | 65,000 | | | **104.6** | **104.6** | **96.1** | **Note 6a** |
| PEQUONNO 115.kV | 8J-22T-2 | 65,000 | | | **104.6** | **104.6** | **96.1** | **Note 6a** |
| PEQUONNO 115.kV | 8J-23T-2 | 65,000 | | | **104.6** | **104.6** | **96.1** | **Note 6a** |
| PEQUONNO 115.kV | 8J-2T-2 | 65,000 | | | **104.6** | **104.6** | **96.1** | **Note 6a** |
| PEQUONNO 115.kV | 8J-31T-2 | 65,000 | | | **104.6** | **104.6** | **96.1** | **Note 6a** |
| PEQUONNO 115.kV | 8J-32T-2 | 65,000 | | | **104.6** | **104.6** | **96.1** | **Note 6a** |
| PEQUONNO 115.kV | 8J-33T-2 | 65,000 | | | **104.6** | **104.6** | **96.1** | **Note 6a** |
| PEQUONNO 115.kV | 8J-3T-2 | 65,000 | | | **104.6** | **104.6** | **96.1** | **Note 6a** |
| PEQUONNO 115.kV | 8J-41T-2 | 65,000 | | | **104.6** | **104.6** | **96.1** | **Note 6a** |
| PEQUONNO 115.kV | 8J-42T-2 | 65,000 | | | **104.6** | **104.6** | **96.1** | **Note 6a** |
| PEQUONNO 115.kV | 8J-43T-2 | 65,000 | | | **104.6** | **104.6** | **96.1** | **Note 6a** |
| QUINNIPI 115.kV | 3Q-1T-2 | 22,624 | | | **102.5** | **102.5** | | **Note 6b** |
| RESCO 115.kV | 91001-9R-2 | 40,000 | | | 81.4 | 81.4 | | |
| SACKETT 115.kV | 28B-1K-2 | 40,000 | | | 46.4 | 46.4 | | |
| SACKETT 115.kV | 28B-1T-2 | 22,624 | | | 72.3 | 72.3 | | |
| SINGER 345.kV | TYPICAL | 50,000 | | | 67.1 | 67.2 | | |
| TRAP FALLS 115.kV | 16F-1T-2 | 43,723 | | | 31.2 | 31.2 | | |
| TRUMBULL 73 115.kV | 50KA | 50,000 | | | 61.2 | 61.2 | | |
| W.RIVR88 115.kV | 10W-1T-2 | 40,000 | | | 87.3 | 87.3 | | |
| W.RIVR89 115.kV | 10W-2T-2 | 40,000 | | | 87.3 | 87.3 | | |



This document may contain Critical Energy Infrastructure Information -Do Not Release

## SHORT CIRCUIT EFFECTS ON UI TRANSMISSION CIRCUIT BREAKERS

### Watertown 32MW Biomass ST near Frost Bridge 115kV Station - Generating Project

### ISO-NE Queue#191

| SUBSTATION | BREAKER ID | [1] [3] BREAKER RATING (A) | [2] BREAKER DUTY (%) Proposed Generator | | | | | Notes |
|---|---|---|---|---|---|---|---|---|
| | | | TEMPORARY "Pre-MN" [5] | | PERMANENT "Post-MN" [5] | | | |
| | | | N/A | N/A | OFF | ON | [4] ON BHS2 OFF | |
| WATER ST_UI 115.kV | 12W-1T-2 | 38,413 | | | 93.2 | 93.3 | | Note 7b |
| WATER ST_UI 115.kV | 12W-2T-2 | 40,000 | | | 94.9 | 94.9 | | Note 7b |
| WOODMT88 115.kV | 29Y-1T-2 | 40,000 | | | 35.8 | 35.8 | | |
| WOODMT89 115.kV | 29Y-2T-2 | 40,000 | | | 35.8 | 35.8 | | |

**Table Notes:**

1. **Breaker Rating (A):** This is the corrected interrupting rating of the breaker (see Note 3). Depending on each circuit breaker's design, it is sometimes necessary to modify the nominal or nameplate interrupting rating to account for local operating conditions including Reclosing Duty and/or Operating Voltage.

2. **Breaker Duty (%):** This is a percentage of the breaker's worst case SC current compared to its corrected interrupting rating. Breaker rating standards require the worst case fault current be corrected by appropriate factors including nominal breaker interrupting time, minimum contact parting time, system X/R ratio, and proximity to generation sources.

3. **Fault Types and Breaker Ratings (1Φ and 3Φ):** For each breaker in the table above both 1Φ and 3Φ faults were studied. These faults were compared to both the 1Φ and 3Φ interrupting ratings of each breaker as appropriate. Certain older breakers (K ≠ 1.0) have a 15% higher interrupting rating for 1Φ faults over 3Φ faults, while modern breakers (K = 1.0) have a single rating for all fault types. This table is a filtered output displaying only the worst case 1Φ or 3Φ fault parameters (duty and rating) for each breaker.

4. **Pequonnock Overduty / Interim Mitigation measures (BHS#2 OFF-Line):**
As a result of the projected overduty condition at Pequonnock, UI in coordination with ISO-NE devised a method to allow continued study of proposed generator interconnection projects while solutions are developed and implemented. The method involves an adjustment to projected baseline fault duties at Pequonnock considering Bridgeport Harbor Station #2 as OFF-Line. BHS#2 was selected since its periodic activation will be used as a trigger to implement a temporary operating procedure whose purpose will be to keep Pequonnock fault duties within acceptable levels while long term solutions are implemented. The temporary operating procedure will provide at least as much margin as that achieved when BHS#2 is off-line.

5. **Middletown Norwalk (MN) Project**
The MN project is currently scheduled for completion in December of 2009 and has a significant impact on area short circuit duties. All projects with a proposed in-service date prior to completion of the MN project must be studied in both a pre-MN and post-MN configuration according to their relative position in the ISO-NE queue. This step is important to avoid creating a temporary overduty condition as a result of construction sequencing. Pre-MN studies run in 2007 are based on the Existing 2007 Base Case model plus all generators *ahead* in the ISO-NE Queue that also have *pre-MN in service dates*.

6. **Overduty Conditions**
a) Pequonnock: Long term solutions for this previously identified overduty condition are currently being studied. Reference "Note 4" above.
b) Quinnipiac: This overduty includes a reclose de-rating factor since it acts as lead breaker for faults on the 8600 line to North Haven (worst case 8600 line fault). Reclosing on this lead breaker to NH has been temporarily disabled to reduce its fault duty by approximately 7% bringing it within its nameplate rating. This breaker is currently scheduled for replacement in Spring 2008.

7. **Marginal Conditions**
a) Grand Ave: These breakers are approaching their SC rating. Based on a number of factors including age and duty UI is investigating options to alleviate these marginal conditions.
b) Water St: These breakers are approaching their SC rating.



This document may contain Critical Energy Infrastructure Information -Do Not Release

Section

10

# Cost Estimation

The cost of interconnecting the project will be provided in the System Impact Study.



This document may contain Critical Energy Infrastructure Information -Do Not Release

Section

11

# Conclusions

The thermal and voltage analysis was carried out for Year 2010 (Post M-N project) conditions. The study results are summarized below.

## N-1 Thermal Analysis

The project has a thermal violation for the peak load scenario with NY importing 1000 MW from NE for both interconnection options.

The overloaded element is the 115kV 1784 line between Northeast Simsbury and North Bloomfield This line is overloaded to 100.3% or 100.5% of its normal rating without any contingency with the Project tapping to 1191 line or 1238 line. The line is loaded to about 98% pre-contingency without the Project. The impact of the Project is about 2%. The thermal violations can be eliminated by using the 2% series reactor on the 1784 line at North Bloomfield, which is part of the approved Frost Bridge autotransformer project and will be in service the same time with the Middletown – Norwalk project. With the 2% series reactor and the Project in service, the loadings of the line are reduced to 91% for both interconnection options.

The analysis shows that the project does not cause any significant thermal and voltage impact on the New England system under N-1 conditions.

## N-2 Analysis Thermal Analysis

The analysis shows that the project causes significant thermal impact on the following transmission facility for both interconnection options.

- Chippen Hill – Chippen Hill Tap 115 kV line

The thermal impact is mainly caused by the Project being dispatched against the 22MW Franklin Drive (Bus 73543) and 13MW Forest PF (Bus 73536) units. It can be resolved by re-dispatching against some other local generation.

The analysis shows that the project does not cause any voltage impact on transmission facilities in New England under N-2 conditions.

## Interface Transfer Limit Analysis

A linear transfer limit analysis was conducted to evaluate the impact of the project on the Southwest Connecticut (SWCT) interface. Both interconnection options have similar results.



This document may contain Critical Energy Infrastructure Information -Do Not Release

The maximum negative impact is about 23 MW on the SWCT interface. This occurs for the peak load scenario with NE -NY interface equal to zero. The limiting element is the Shaws Hill – Bunker Hill 115 kV for contingency FROSTBR27T at a transfer limit of 3685MW.

In this transfer level (3685MW), there are only about 100 MW machines in service in SWCT. It is considered as an unrealistic scenario. Base on this fact, the negative 23 MW impact will not be addressed as a significant impact for the project.

## Short Circuit Results

The breaker duty study results show that the project does not specifically cause any circuit breakers to be over-dutied on either the UI or the NU system.

## Cost Estimation

The cost of interconnecting the project will be provided in the System Impact Study.

## Conclusion

The thermal and voltage analysis for the conditions tested shows that the study Project has no significant adverse impacts on the transmission system that may require transmission upgrades or system reinforcements.



This document may contain Critical Energy Infrastructure Information -Do Not Release

Appendix

A

# Load Flow Summaries

This appendix contains load flow summaries for the base cases without the Project:

- 2010-PK_1A-NY-NE=1000: Summer Peak-Dispatch Without Project
- 2010-PK_1A-NY-NE= -1000: Summer Peak-Dispatch Without Project
- 2010-SH_1A-NY-NE=1000: Shoulder Load-Dispatch Without Project
- 2010-SH_1A-NY-NE= -1000: Shoulder Load-Dispatch Without Project



This document may contain Critical Energy Infrastructure Information -Do Not Release

Project #191, Peak Load, NY-NE 1000MW, With M-N, Without the Project

2005 NPCC LIB - PK CASE W/O PROJECT #191
POST M-N, HIGHIMPORT(CT, SWCT), NY-NE 1000

GENERATION
~~~~~~~~~~

~~~VT/MA~~~

| # | V | MW | MX | # | V | MW | MX | # | V | MW | MX |
|---|---|---|---|---|---|---|---|---|---|---|---|
| 70705 VTYAK G | 0.978 | 550 | 108 | 73072 ALT12 PF | 1.020 | 33 | 10 | 73073 ALT34 PF | 1.018 | 78 | 10 |
| 72986 BERKPWR | 1.036 | 280 | 50 | 73069 MAPR1 PF | 1.019 | 56 | 23 | 73070 MAPR2 PF | 1.018 | 76 | 23 |
| 73071 MAPR3 PF | 1.012 | 70 | 23 | 73085 MT.TOM | 1.006 | 146 | 19 | 72512 BRSWP G1 | 1.018 | 280 | 75 |
| 72513 BRSWP G2 | 1.018 | 280 | 75 | 73083 NRTHFD3 | 1.024 | 250 | 80* | 73084 NRTHFD4 | 1.024 | 250 | 80* |
| 72930 STNYBK1A | 1.041 | 65 | 13 | 72931 STNYBK1B | 1.041 | 65 | 13 | 72932 STNYBK1C | 1.041 | 65 | 13 |
| 72933 STNYBK 1 | 1.041 | 87 | 14 | 72934 STNYBK2A | 1.041 | 65 | 13 | 72935 STNYBK2B | 1.041 | 65 | 13 |
| 73080 WSPFLD 3 | 0.986 | 107 | -7 | 72244 MILLENST | 1.004 | 117 | 20 | 72243 MILLENCT | 1.005 | 273 | 43 |

~~~CT~~~

| # | V | MW | MX | # | V | MW | MX | # | V | MW | MX |
|---|---|---|---|---|---|---|---|---|---|---|---|
| 73562 MILL#2 | 0.998 | 940 | 187 | 73563 MILL#3 | 0.998 | 1276 | 248 | 73558 MONTV#5 | 0.981 | 81 | 7 |
| 73559 MONTV#6 | 0.992 | 309 | 36 | 73555 MIDDTN#2 | 1.008 | 117 | 32 | 73556 MIDDTN#3 | 0.985 | 236 | 32 |
| 73557 MIDDTN#4 | 0.974 | 400 | -9 | 73565 LAKERD#1 | 0.000 | 0 | 0 | 73566 LAKERD#2 | 0.000 | 0 | 0 |
| 73567 LAKERD#3 | 0.000 | 0 | 0 | 73549 SMD1112J | 0.000 | 0 | 0 | 73550 SMD1314J | 1.044 | 72 | 4* |
| 73594 WALL LV1 | 0.000 | 0 | 0 | 73595 WALL LV2 | 0.000 | 0 | 0 | 73596 WALL LV3 | 0.000 | 0 | 0 |
| 73501 KLEENGT1 | 1.053 | 158 | 130* | 73502 KLEENGT2 | 1.053 | 158 | 130* | 73503 KLEEN ST | 1.027 | 318 | 155* |
| 73538 AESTH PF | 0.995 | 180 | 16 | 73652 BE 11 | 0.000 | 0 | 0 | 73653 BE 12 | 0.000 | 0 | 0 |
| 73654 BE 10 ST | 0.000 | 0 | 0 | 73647 BPTHBR#2 | 0.000 | 0 | 0 | 73648 BPTHBR#3 | 0.955 | 375 | -31 |
| 73570 DEVGAS11 | 0.000 | 0 | 0 | 73571 DEVGAS12 | 0.000 | 0 | 0 | 73572 DEVGAS13 | 0.000 | 0 | 0 |
| 73573 DEVGAS14 | 0.000 | 0 | 0 | 73553 DVN1516 | 1.002 | 50 | 18* | 73554 DVN1718 | 0.000 | 0 | 0 |
| 73574 MILFD#1 | 0.000 | 0 | 0 | 73575 MILFD#2 | 0.000 | 0 | 0 | 73651 NH HARBR | 0.971 | 447 | 39 |
| 73551 NORHAR#1 | 0.000 | 0 | 0 | 73552 NORHAR#2 | 0.000 | 0 | 0 | 139 EXT-TIRE | 1.040 | 26 | 2 |
| 90101 EXTWD_1G | 0.000 | 0 | 0 | 90106 EXTWD_2G | 0.000 | 0 | 0 | 90111 EXTWD_3G | 0.000 | 0 | 0 |
| 90116 EXTWD_4G | 0.000 | 0 | 0 | 90121 EXTWD_5G | 0.000 | 0 | 0 | 90126 EXTWD_6G | 0.000 | 0 | 0 |
| 90131 EXTWD_7G | 0.000 | 0 | 0 | 73290 PLNFLDG1 | 0.000 | 0 | 0 | 73788 NORHBR 3 | 0.000 | 0 | 0 |
| 73789 NORHBR 4 | 0.000 | 0 | 0 | 73790 NORHBR 5 | 0.000 | 0 | 0 | 73635 PIERCE | 0.000 | 0 | 0 |
| 73801 WSIDE1 | 0.000 | 0 | 0 | 73802 WSIDE2 | 0.000 | 0 | 0 | 73803 WSIDE3 | 0.000 | 0 | 0 |
| 73598 BRGPTII | 0.000 | 0 | 0 | 73599 BRGPTII | 0.000 | 0 | 0 | 73780 CMEEC | 1.020 | 49 | 1 |
| 73800 COSCOB 1 | 0.000 | 0 | 0 | 73560 KLEEN G1 | 0.000 | 0 | 0 | 73561 KLEEN G2 | 0.000 | 0 | 0 |
| 73302 MID_112 | 0.000 | 0 | 0 | 73307 MIDTN12 | 0.000 | 0 | 0 | 73308 MIDTN13 | 0.000 | 0 | 0 |
| 73591 MV7 | 1.036 | 166 | 58 | 73592 MV8 | 1.036 | 166 | 58 | 73581 NUTMG12 | 1.050 | 106 | 38* |
| 73582 NUTMG34 | 1.050 | 106 | 38* | 90000 SHEPAUG1 | 1.000 | 50 | -7 | 90001 SHEPAUG2 | 1.000 | 50 | -7 |
| 73187 STEVENSN | 1.009 | 29 | 6* | | | | | | | | |

~~~ME/NH~~~

| # | V | MW | MX | # | V | MW | MX | # | V | MW | MX |
|---|---|---|---|---|---|---|---|---|---|---|---|
| 70060 MIS GT1 | 0.000 | 0 | 0 | 70061 MIS GT2 | 0.000 | 0 | 0 | 70062 MIS ST | 1.003 | 150 | 60* |
| 70377 AEC G1 | 1.092 | 50 | 25 | 70378 AEC G2 | 1.093 | 50 | 25 | 70379 AEC G3 | 1.092 | 50 | 25 |
| 70389 BUCKS G4 | 1.043 | 174 | 112 | 70426 CHAMP G2 | 0.935 | 15 | 6* | 70424 CHAMP G3 | 1.009 | 65 | 32* |
| 70374 | 0.000 | 0 | 0 | 70375 | 0.000 | 0 | 0 | 70376 | 0.000 | 0 | 0 |
| 70425 MEADCOGN | 1.007 | 93 | 15* | 70381 RPA CG1 | 1.043 | 179 | 47 | 70382 RPA SG2 | 1.043 | 93 | 18 |
| 70422 WARRN G1 | 1.040 | 51 | 15* | 70423 WARRN G2 | 1.059 | 45 | 11* | 70386 WBK G1 | 1.043 | 172 | 78 |
| 70387 WBK G2 | 1.043 | 172 | 78 | 70388 WBK G3 | 1.043 | 185 | 79 | 70365 WF WY #1 | 1.010 | 50 | 14* |
| 70366 WF WY #2 | 1.011 | 50 | 14* | 70367 WF WY #3 | 0.000 | 0 | 0 | 70368 WF WY #4 | 0.000 | 0 | 0 |
| 71857 COMRF G1 | 1.025 | 41 | 5 | 71858 COMRF G2 | 1.025 | 41 | 5 | 71859 COMRF G3 | 1.025 | 40 | 5 |
| 71860 COMRF G4 | 1.025 | 40 | 5 | 71861 MOORE G1 | 1.005 | 40 | -3 | 71862 MOORE G2 | 1.002 | 48 | -3 |
| 71863 MOORE G3 | 1.029 | 48 | 14 | 71864 MOORE G4 | 1.045 | 48 | 14 | 72868 NWNGT G1 | 0.989 | 422 | 40 |
| 72702 CONEDG1 | 1.001 | 160 | 40 | 72703 CONEDG2 | 1.001 | 160 | 40 | 72704 CONEDG3 | 0.999 | 190 | 40 |
| 71950 GRANRDG1 | 1.046 | 280 | 41 | 71951 GRANRDG2 | 1.083 | 280 | 140* | 72701 AESSTG | 1.035 | 280 | 23 |
| 72866 MERMK G1 | 1.020 | 113 | 6 | 72867 MERMK G2 | 1.020 | 320 | 16 | 72869 SBRK G1 | 1.008 | 1318 | 314 |
| 72870 SCHILLER | 1.030 | 48 | 24 | 72872 SCHILLER | 1.030 | 48 | 24 | 72871 SCHILLER | 1.029 | 50 | 24 |

~~~NEMA~~~

| # | V | MW | MX | # | V | MW | MX | # | V | MW | MX |
|---|---|---|---|---|---|---|---|---|---|---|---|
| 71126 KEND CT | 0.000 | 0 | 0 | 71067 MYS8 GTS | 1.016 | 460 | 18 | 71068 MYS8 ST | 1.018 | 290 | 18 |
| 71069 MYS9 GTS | 1.004 | 460 | 3 | 71070 MYS9 ST | 1.052 | 290 | 120 | 71060 MYST G4 | 0.994 | 133 | 3 |
| 71061 MYST 5G | 1.011 | 109 | 3 | 71062 MYST G6 | 1.011 | 136 | 3 | 71063 MYST G7 | 1.011 | 565 | 18 |
| 71073 N.BOST 1 | 0.977 | 350 | -48 | 71074 N.BOST 2 | 0.000 | 0 | 0 | 71946 SALEM G1 | 1.023 | 81 | 10 |
| 71947 SALEM G2 | 1.024 | 78 | 10 | 71948 SALEM G3 | 1.019 | 143 | 20 | 71949 SALEM G4 | 1.020 | 400 | 59 |
| 72059 LENERG1 | 1.019 | 65 | 1 | 72060 LENERG2 | 1.023 | 20 | 0 | | | | |

~~~SEMA/RI~~~

| # | V | MW | MX | # | V | MW | MX | # | V | MW | MX |
|---|---|---|---|---|---|---|---|---|---|---|---|
| 71095 ANPBLCK1 | 1.098 | 290 | 150* | 71096 ANPBLCK2 | 1.098 | 290 | 150* | 72377 BELL #1 | 1.041 | 290 | 39 |
| 72378 BELL #2 | 0.000 | 0 | 0 | 72372 BP #1 GN | 0.000 | 0 | 0 | 72375 BP #2 GN | 1.029 | 241 | 117* |
| 72370 BP #3 GN | 1.021 | 402 | 55 | 72371 BP #4 GN | 1.020 | 421 | 41 | 71531 OSP1 PF | 1.031 | 77 | 20 |
| 71532 OSP2 PF | 1.031 | 77 | 20 | 71533 OSP3 PF | 1.032 | 108 | 27 | 71534 OSP4 PF | 1.031 | 77 | 20 |
| 71535 OSP5 PF | 1.031 | 77 | 20 | 71536 OSP6 PF | 1.032 | 108 | 27 | 71084 NEA GTPF | 1.050 | 85 | 40* |
| 71085 NEA GTPF | 1.050 | 85 | 40* | 71086 NEA STPF | 1.065 | 80 | 55* | 72666 FRSQ SC1 | 0.994 | 43 | -5 |
| 72667 FRSQ SC2 | 0.994 | 43 | -5 | 72668 FRSQ SC3 | 0.993 | 42 | -5 | 72661 MANCH09A | 1.009 | 99 | 26 |
| 72662 MANCH10A | 1.009 | 99 | 26 | 72663 MANCH11A | 1.009 | 99 | 26 | 72671 RISE G1 | 1.044 | 176 | 69 |

This document may contain Critical Energy Infrastructure Information -Do Not Release

| | | | | | | | | | | | | | | |
|---|---|---|---|---|---|---|---|---|---|---|---|---|---|---|
| 72672 | RISE G2 | 1.044 | 176 | 69 | 72673 | RISE G3 | 1.043 | 196 | 69 | 72373 | MPLP 1PF | 1.037 | 80 | 33 |
| 72374 | MPLP 2PF | 1.030 | 44 | 25 | 71251 | CANAL G1 | 1.039 | 566 | 239* | 71252 | CANAL G2 | 1.016 | 576 | 120* |
| 71094 | PLGRM G1 | 1.034 | 670 | 122 | 71092 | EDG ST | 0.000 | 0 | 0 | 71093 | EDG GTS | 1.009 | 276 | -29 |
| 71522 | SOM G6 | 0.958 | 70 | 18 | 72669 | TIVER G1 | 0.995 | 189 | 6 | 72670 | TIVER G2 | 0.998 | 92 | 3 |
| 71524 | DGHTNPWR | 1.012 | 185 | 45 | | | | | | | | | | |

| | MW | MX | | MW | MX | | MW | MX |
|---|---|---|---|---|---|---|---|---|
| MILLSTONE | 2216 | 435 | BRPT-ENERGY | 0 | 0 | MIDDLETOWN | 753 | 54 |
| MONTVILLE | 723 | 159 | NORWALK | 0 | 0 | BPTHBR | 375 | -31 |
| NHHARBOUR | 447 | 39 | DEVON | 50 | 18 | WALLINGFORD | 0 | 0 |
| BERKSHIRE | 280 | 50 | LAKEROAD | 0 | 0 | STONYBROOK | 412 | 79 |
| MILLENNIUM | 390 | 63 | BRAYTONPT | 1064 | 213 | HOPE | 548 | 206 |
| FRSQ | 425 | 64 | SOMERSET | 70 | 18 | OSP | 523 | 135 |
| NEA | 249 | 135 | CANAL | 1142 | 359 | PILGRIM | 670 | 122 |
| MASSPWRR | 202 | 68 | ANP-BELLINGHAM | 290 | 39 | ANP-BLACKSTONE | 580 | 300 |
| EMI-TIVERTON | 281 | 8 | EMI-DIGHTON | 185 | 45 | SITHE-EDGAR | 276 | -29 |
| MYSTIC | 943 | 27 | NEWBOSTON | 350 | -48 | SALEMHBR | 702 | 98 |
| SITHE-MYSTIC | 1500 | 159 | SEABROOK | 1318 | 314 | NEWINGTON | 422 | 40 |
| ConEd_Newington | 0 | 0 | SCHILLER | 146 | 72 | MERRIMACK | 433 | 22 |
| WYMAN | 100 | 28 | VTYANKEE | 550 | 108 | BEARSWAMP | 560 | 149 |
| NORTHFIELD | 500 | 160 | ALTRESCO | 110 | 20 | MIS | 150 | 60 |
| AEC | 149 | 76 | RPA | 272 | 65 | WESTBROOK | 529 | 235 |
| BUCKSPORT | 174 | 112 | EXETRTIRE | 26 | 2 | P#145-@1607Line | 0 | 0 |
| P#150-FryBrook | 0 | 0 | P#125-Norwalk | 0 | 0 | P#140-WALLNGFRD | 0 | 0 |
| P#104-WaterSide | 0 | 0 | P#159-Singer | 0 | 0 | P#115-NOR27.6 | 49 | 1 |
| P#125-CosCob | 0 | 0 | P#175&182 | 212 | 77 | | | |

INTERFACE FLOWS

| | | | | | | | | |
|---|---|---|---|---|---|---|---|---|
| NB-NE | 1005 | 43 | ORRING-SOUTH | 1066 | -315 | SUROWIEC-SOUTH | 708 | -189 |
| MEYANKEE-SOUTH | 713 | -246 | MAINE-NH | 600 | -208 | NNE-SCOBIE+394 | 2360 | 72 |
| SEABROOK-SOUTH | 1605 | 155 | NORTH-SOUTH | 2289 | -103 | CMFD/MOORE-SO | 285 | -5 |
| SNDYPOND-SOUTH | 1951 | 67 | CONN-IMPORT | 2568 | -78 | SWCT-S | 3384 | 185 |
| SWCT-N | 3177 | 155 | NE-NRWLK-STFD | 1413 | -230 | BOSTON IMPORT | 2344 | -353 |
| SEMA/RI EXPORT | 995 | -110 | SEMA EXPORT | -262 | -351 | EAST-WEST | 1084 | 72 |
| NY-NE 2200(170 | 999 | -280 | NW VT | 406 | -68 | PLAT PAR | 118 | -38 |
| BLISS PAR | -7 | -18 | UPNY-CONED | 4166 | -65 | CENTRAL_EAST | 1903 | -43<4 |
| CROSS-SOUND | -346 | 134 | CONN-EXPORT | -2551 | 227 | LILCO | -1 | -53 |
| CT_EW> | 3387 | -196 | | | | | | |

HVDC TRANSFERS FROM H-Q

| | | | | | |
|---|---|---|---|---|---|
| CHAT-1 = | 366 | | | HIGHGATE = | 191 |
| MADAWASK = | 0 | PHII-P1 = | 750 | PHII-P2 = | 750 |
| EEL = | 0 | | | | |

BUS VOLTAGES

| | | V | LMT | | | | V | LMT | | | | V | LMT | |
|---|---|---|---|---|---|---|---|---|---|---|---|---|---|---|
| 70001 | CHESTER 345 | 342. | | | 72692 | NWGTN345 345 | 357. | | | 72694 | SEBRK345 345 | 357. | | |
| 71789 | TEWKS 345 | 358. | | | 70759 | MYSTIC 345 | 360. | | | 71797 | MILLBURY 345 | 354. | | |
| 72925 | LUDLOW 345 | 348. | | | 72926 | NRTHFLD 345 | 356. | | | 73106 | SOUTHGTN 345 | 352. | | |
| 73108 | CARD 345 | 353. | | | 73109 | MONTVILE 345 | 357. | | | 73110 | MILLSTNE 345 | 357. | | |
| 73116 | MIDDLTWN 345 | 355. | | | 71801 | BRAYTN P 345 | 358. | | | 71811 | KENT CO. 345 | 352. | | |
| 71326 | BRIDGWTR 345 | 355. | | | 71336 | SHERMAN 345 | 356. | | | 71338 | OS POWER 345 | 356. | | |
| 71337 | WFARNUM 345 | 354. | | | 70772 | W MEDWAY 345 | 356. | | | 70780 | WWALP345 345 | 356. | | |
| 70783 | PILGRIM 345 | 358. | | | 70773 | NEA 336 345 | 358. | | | 71193 | CANAL 345 | 358. | | |
| 71133 | CARVER 345 | 356. | | | 70655 | SHELBRNE 115 | 116. | L | | 70795 | FRMNGHAM 230 | 235. | | |
| 70793 | MDFRM230 230 | 239. | | | 70794 | MDWLT230 230 | 240. | | | 70818 | MYSTC MA 115 | 119. | | |
| 71891 | SALEM HR 115 | 119. | | | 72096 | MILLBURY 115 | 116. | | 126.0 * | 71377 | SOMERSET 115 | 116. | | |
| 72277 | MIDWEYMT 115 | 117. | | | 72259 | MINK 183 115 | 118. | | | 72574 | WARRN 84 115 | 116. | | |
| 72569 | FRSQ 115 | 119. | | 0.0 | 72566 | PHILP183 115 | 119. | | | 72553 | ADMIRAL3 115 | 119. | | |
| 71405 | PAWTUCKT 115 | 112. | | | 71379 | SWANSEA 115 | 115. | | | 72269 | WITNPD43 115 | 115. | | |
| 72278 | FIELD 1 115 | 117. | | | 72266 | READ ST 115 | 114. | | | 72267 | S WREN29 115 | 114. | | |
| 72254 | DEPOT129 115 | 117. | | | 72255 | DEPOT130 115 | 117. | | | 72582 | WOONSCKT 115 | 117. | | |
| 71403 | WFARNUM 115 | 117. | | | 72579 | WOLF 171 115 | 118. | | | 72584 | HARTAVE 115 | 119. | | |
| 72544 | JOHNSTN1 115 | 119. | | 0.0 | 72545 | JOHNSTN2 115 | 119. | | 0.0 | 72560 | DRUMROCK 115 | 116. | | 23.4 |
| 72565 | KENT CO 115 | 116. | | 75.6 * | 72570 | SOCK187 115 | 115. | | | 72571 | SOCK188 115 | 115. | | |
| 72557 | DAVIST85 115 | 115. | | | 72559 | DAVIS 90 115 | 115. | | | 72572 | W.KINGST 115 | 115. | | 37.8 * |
| 72538 | KENYON 115 | 115. | | | 72581 | WOOD RIV 115 | 114. | | | 70512 | ESX B-2 115 | 116. | | |
| 70487 | COOL 345 345 | 358. | | | 70520 | W RUTLND 115 | 117. | | | 73281 | EXETR PF 115 | 118. | | |
| 73115 | PLUMTREE 345 | 346. | | -75.0 * | 73135 | NOROH 345 | 347. | | -149.9 * | 73293 | NORWALK 345 | 348. | | -100.0 * |
| 73301 | SINGER 345 | 348. | | -200.0 * | 73102 | NH CAPS 115 | 120. | | 42.0 * | 73153 | BRANFORD 115 | 118. | | 37.8 * |
| 73154 | SGTN B 115 | 118. | | 157.2 * | 73162 | WATERSDE 115 | 118. | | 39.6 * | 73165 | STONY HL 115 | 116. | | 0.0 |
| 73168 | GLNBROOK 115 | 119. | | 348.0 * | 73177 | MYSTICCT 115 | 115. | | 50.4 * | 73190 | ROCK RIV 115 | 116. | | 25.2 * |
| 73198 | SOUTHGTN 115 | 118. | | 157.2 * | 73202 | FROST BR 115 | 118. | | 262.0 * | 73210 | MONTVLLE 115 | 117. | | 104.8 * |
| 73230 | HADDAM 115 | 119. | | 37.8 * | 73242 | MANCHSTR 115 | 116. | | 314.4 * | 73243 | BERLIN 115 | 116. | | 132.0 * |
| 73244 | N.BLMFLD 115 | 117. | | 157.2 * | 73260 | FRKLN DR 115 | 117. | | 37.8 * | 73262 | CANTON 115 | 117. | | 50.4 * |
| 73267 | DARIEN 115 | 119. | | 39.6 * | 73668 | E.SHORE 115 | 119. | | 84.0 * | 73671 | NO.HAVEN 115 | 120. | | 42.0 * |
| 73672 | SACKETT 115 | 119. | | 42.0 * | | | | | | | | | | |

AREA/ZONE TOTALS

| | | | | | |
|---|---|---|---|---|---|
| NEPOOL_GEN | 27532 | NEPOOL_LOAD | 30529 | NEPOOL_LOSS | 745 |
| NEPOOL_INT | -3746 | | | | |

This document may contain Critical Energy Infrastructure Information -Do Not Release

Project #191, Peak Load, NY-NE -1000MW, With M-N, Without the Project

2005 NPCC LIB - PK CASE W/O PROJECT #191
POST M-N, HIGHIMPORT(CT, SWCT), NY-NE -1000

GENERATION
~~~~~~~~~~

~~~VT/MA~~~

| # | | V | MW | MX | # | | V | MW | MX | # | | V | MW | MX |
|---|---|---|---|---|---|---|---|---|---|---|---|---|---|---|
| 70705 | VTYAK G | 0.980 | 550 | 150* | 73072 | ALT12 PF | 1.022 | 33 | 11 | 73073 | ALT34 PF | 1.020 | 78 | 11 |
| 72986 | BERKPWR | 0.000 | 0 | 0 | 73069 | MAPR1 PF | 1.027 | 56 | 29 | 73070 | MAPR2 PF | 1.026 | 76 | 29 |
| 73071 | MAPR3 PF | 1.018 | 70 | 29 | 73085 | MT.TOM | 1.012 | 146 | 27 | 72512 | BRSWP G1 | 1.017 | 280 | 71 |
| 72513 | BRSWP G2 | 1.017 | 280 | 71 | 73083 | NRTHFD3 | 1.014 | 250 | 80* | 73084 | NRTHFD4 | 1.014 | 250 | 80* |
| 72930 | STNYBK1A | 1.041 | 65 | 16 | 72931 | STNYBK1B | 1.041 | 65 | 16 | 72932 | STNYBK1C | 1.041 | 65 | 16 |
| 72933 | STNYBK 1 | 1.041 | 87 | 18 | 72934 | STNYBK2A | 1.041 | 65 | 16 | 72935 | STNYBK2B | 1.041 | 65 | 16 |
| 73080 | WSPFLD 3 | 1.000 | 107 | 11 | 72244 | MILLENST | 1.007 | 117 | 23 | 72243 | MILLENCT | 1.009 | 273 | 51 |

~~~CT~~~

| # | | V | MW | MX | # | | V | MW | MX | # | | V | MW | MX |
|---|---|---|---|---|---|---|---|---|---|---|---|---|---|---|
| 73562 | MILL#2 | 1.004 | 940 | 239 | 73563 | MILL#3 | 1.004 | 1276 | 317 | 73558 | MONTV#5 | 0.988 | 81 | 12 |
| 73559 | MONTV#6 | 0.000 | 0 | 0 | 73555 | MIDDTN#2 | 0.993 | 117 | 15 | 73556 | MIDDTN#3 | 0.978 | 236 | 15 |
| 73557 | MIDDTN#4 | 1.014 | 400 | 148 | 73565 | LAKERD#1 | 1.054 | 280 | 174* | 73566 | LAKERD#2 | 1.054 | 280 | 174* |
| 73567 | LAKERD#3 | 0.000 | 0 | 0 | 73549 | SMD1112J | 1.048 | 72 | 4* | 73550 | SMD1314J | 1.048 | 72 | 4* |
| 73594 | WALL LV1 | 0.000 | 0 | 0 | 73595 | WALL LV2 | 0.000 | 0 | 0 | 73596 | WALL LV3 | 0.000 | 0 | 0 |
| 73501 | KLEENGT1 | 1.053 | 158 | 130* | 73502 | KLEENGT2 | 1.053 | 158 | 130* | 73503 | KLEEN ST | 1.027 | 318 | 155* |
| 73538 | AESTH PF | 1.000 | 180 | 28 | 73652 | BE 11 | 0.000 | 0 | 0 | 73653 | BE 12 | 0.000 | 0 | 0 |
| 73654 | BE 10 ST | 0.000 | 0 | 0 | 73647 | BPTHBR#2 | 0.000 | 0 | 0 | 73648 | BPTHBR#3 | 0.959 | 375 | -14 |
| 73570 | DEVGAS11 | 1.022 | 40 | 0 | 73571 | DEVGAS12 | 1.021 | 40 | 0 | 73572 | DEVGAS13 | 1.021 | 40 | 0 |
| 73573 | DEVGAS14 | 1.022 | 40 | 0 | 73553 | DVN1516 | 0.946 | 50 | -28 | 73554 | DVN1718 | 0.000 | 0 | 0 |
| 73574 | MILFD#1 | 0.000 | 0 | 0 | 73575 | MILFD#2 | 0.000 | 0 | 0 | 73651 | NH HARBR | 0.975 | 447 | 59 |
| 73551 | NORHAR#1 | 0.000 | 0 | 0 | 73552 | NORHAR#2 | 0.000 | 0 | 0 | 139 | EXT-TIRE | 1.040 | 26 | 2 |
| 90101 | EXTWD_1G | 1.050 | 8 | 1 | 90106 | EXTWD_2G | 1.050 | 8 | 1 | 90111 | EXTWD_3G | 1.050 | 8 | 1 |
| 90116 | EXTWD_4G | 1.050 | 8 | 1 | 90121 | EXTWD_5G | 1.050 | 8 | 1 | 90126 | EXTWD_6G | 1.050 | 8 | 1 |
| 90131 | EXTWD_7G | 1.050 | 6 | 1 | 73290 | PLNFLDG1 | 1.000 | 38 | -4 | 73788 | NORHBR 3 | 0.000 | 0 | 0 |
| 73789 | NORHBR 4 | 0.000 | 0 | 0 | 73790 | NORHBR 5 | 0.000 | 0 | 0 | 73635 | PIERCE | 0.000 | 0 | 0 |
| 73801 | WSIDE1 | 0.000 | 0 | 0 | 73802 | WSIDE2 | 0.000 | 0 | 0 | 73803 | WSIDE3 | 0.000 | 0 | 0 |
| 73598 | BRGPTII | 0.000 | 0 | 0 | 73599 | BRGPTII | 0.000 | 0 | 0 | 73780 | CMEEC | 0.000 | 0 | 0 |
| 73800 | COSCOB 1 | 0.000 | 0 | 0 | 73560 | KLEEN G1 | 1.065 | 43 | 15 | 73561 | KLEEN G2 | 1.065 | 43 | 15 |
| 73302 | MID_112 | 0.000 | 0 | 0 | 73307 | MIDTN12 | 1.119 | 112 | 95* | 73308 | MIDTN13 | 0.000 | 0 | 0 |
| 73591 | MV7 | 1.056 | 166 | 102 | 73592 | MV8 | 1.056 | 166 | 102 | 73581 | NUTMG12 | 1.050 | 106 | 38* |
| 73582 | NUTMG34 | 1.050 | 106 | 38* | 90000 | SHEPAUG1 | 1.000 | 50 | -9 | 90001 | SHEPAUG2 | 1.000 | 50 | -9 |
| 73187 | STEVENSN | 1.012 | 29 | 6* | | | | | | | | | | |

~~~ME/NH~~~

| # | | V | MW | MX | # | | V | MW | MX | # | | V | MW | MX |
|---|---|---|---|---|---|---|---|---|---|---|---|---|---|---|
| 70060 | MIS GT1 | 0.000 | 0 | 0 | 70061 | MIS GT2 | 0.000 | 0 | 0 | 70062 | MIS ST | 1.003 | 150 | 60* |
| 70377 | AEC G1 | 1.093 | 50 | 26 | 70378 | AEC G2 | 1.094 | 50 | 26 | 70379 | AEC G3 | 1.094 | 50 | 26 |
| 70389 | BUCKS G4 | 1.043 | 174 | 113 | 70426 | CHAMP G2 | 0.934 | 15 | 6* | 70424 | CHAMP G3 | 1.008 | 65 | 32* |
| 70374 | | 0.000 | 0 | 0 | 70375 | | 0.000 | 0 | 0 | 70376 | | 0.000 | 0 | 0 |
| 70425 | MEADCOGN | 1.006 | 93 | 15* | 70381 | RPA CG1 | 1.043 | 179 | 48 | 70382 | RPA SG2 | 1.043 | 93 | 19 |
| 70422 | WARRN G1 | 1.039 | 51 | 15* | 70423 | WARRN G2 | 1.058 | 45 | 11* | 70386 | WBK G1 | 1.043 | 172 | 80 |
| 70387 | WBK G2 | 1.043 | 172 | 80 | 70388 | WBK G3 | 1.043 | 185 | 81 | 70365 | WF WY #1 | 1.014 | 50 | 11 |
| 70366 | WF WY #2 | 1.014 | 50 | 11 | 70367 | WF WY #3 | 1.012 | 125 | 22 | 70368 | WF WY #4 | 1.029 | 536 | 166 |
| 71857 | COMRF G1 | 1.025 | 41 | 5 | 71858 | COMRF G2 | 1.025 | 41 | 5 | 71859 | COMRF G3 | 1.025 | 40 | 5 |
| 71860 | COMRF G4 | 1.025 | 40 | 5 | 71861 | MOORE G1 | 1.005 | 40 | -3 | 71862 | MOORE G2 | 1.003 | 48 | -3 |
| 71863 | MOORE G3 | 1.031 | 48 | 14 | 71864 | MOORE G4 | 1.046 | 48 | 14 | 72868 | NWNGT G1 | 0.993 | 422 | 54 |
| 72702 | CONEDG1 | 1.008 | 160 | 54 | 72703 | CONEDG2 | 1.008 | 160 | 54 | 72704 | CONEDG3 | 1.004 | 190 | 54 |
| 71950 | GRANRDG1 | 1.047 | 280 | 43 | 71951 | GRANRDG2 | 1.083 | 280 | 140* | 72701 | AESSTG | 1.035 | 280 | 32 |
| 72866 | MERMK G1 | 1.024 | 113 | 12 | 72867 | MERMK G2 | 1.025 | 320 | 33 | 72869 | SBRK G1 | 1.011 | 1318 | 375* |
| 72870 | SCHILLER | 1.026 | 48 | 25* | 72872 | SCHILLER | 1.026 | 48 | 25* | 72871 | SCHILLER | 1.026 | 50 | 25* |

~~~NEMA~~~

| # | | V | MW | MX | # | | V | MW | MX | # | | V | MW | MX |
|---|---|---|---|---|---|---|---|---|---|---|---|---|---|---|
| 71126 | KEND CT | 0.000 | 0 | 0 | 71067 | MYS8 GTS | 1.019 | 460 | 34 | 71068 | MYS8 ST | 1.025 | 290 | 34 |
| 71069 | MYS9 GTS | 1.003 | 460 | -4 | 71070 | MYS9 ST | 1.052 | 290 | 122 | 71060 | MYST G4 | 0.989 | 133 | -4 |
| 71061 | MYST 5G | 1.007 | 109 | -4 | 71062 | MYST G6 | 1.007 | 136 | -4 | 71063 | MYST G7 | 0.000 | 0 | 0 |
| 71073 | N.BOST 1 | 0.978 | 350 | -48 | 71074 | N.BOST 2 | 0.000 | 0 | 0 | 71946 | SALEM G1 | 1.024 | 81 | 10 |
| 71947 | SALEM G2 | 1.024 | 78 | 10 | 71948 | SALEM G3 | 1.019 | 143 | 20 | 71949 | SALEM G4 | 1.020 | 400 | 61 |
| 72059 | LENERG1 | 1.023 | 65 | 4 | 72060 | LENERG2 | 1.024 | 20 | 1 | | | | | |

~~~SEMA/RI~~~

| # | | V | MW | MX | # | | V | MW | MX | # | | V | MW | MX |
|---|---|---|---|---|---|---|---|---|---|---|---|---|---|---|
| 71095 | ANPBLCK1 | 1.094 | 290 | 150* | 71096 | ANPBLCK2 | 1.094 | 290 | 150* | 72377 | BELL #1 | 1.060 | 290 | 80 |
| 72378 | BELL #2 | 1.060 | 290 | 80 | 72372 | BP #1 GN | 0.000 | 0 | 0 | 72375 | BP #2 GN | 1.029 | 241 | 117* |
| 72370 | BP #3 GN | 1.021 | 413 | 60 | 72371 | BP #4 GN | 1.021 | 421 | 45 | 71531 | OSP1 PF | 1.030 | 77 | 19 |
| 71532 | OSP2 PF | 1.030 | 77 | 19 | 71533 | OSP3 PF | 1.030 | 108 | 26 | 71534 | OSP4 PF | 1.030 | 77 | 19 |
| 71535 | OSP5 PF | 1.030 | 77 | 19 | 71536 | OSP6 PF | 1.030 | 108 | 26 | 71084 | NEA GTPF | 1.046 | 85 | 40* |
| 71085 | NEA GTPF | 1.046 | 85 | 40* | 71086 | NEA STPF | 1.061 | 80 | 55* | 72666 | FRSQ SC1 | 0.994 | 43 | -5 |
| 72667 | FRSQ SC2 | 0.994 | 43 | -5 | 72668 | FRSQ SC3 | 0.993 | 42 | -5 | 72661 | MANCH09A | 1.009 | 99 | 27 |

This document may contain Critical Energy Infrastructure Information -Do Not Release

| | | | | | | | | | | | | | |
|---|---|---|---|---|---|---|---|---|---|---|---|---|---|
| 72662 | MANCH10A | 1.009 | 99 | 27 | 72663 | MANCH11A | 1.009 | 99 | 27 | 72671 | RISE G1 | 1.047 | 176 | 74 |
| 72672 | RISE G2 | 1.047 | 176 | 74 | 72673 | RISE G3 | 1.046 | 196 | 74 | 72373 | MPLP 1PF | 1.040 | 80 | 37 |
| 72374 | MPLP 2PF | 1.031 | 44 | 27* | 71251 | CANAL G1 | 1.040 | 566 | 239* | 71252 | CANAL G2 | 1.017 | 576 | 120* |
| 71094 | PLGRM G1 | 1.031 | 670 | 96 | 71092 | EDG ST | 1.005 | 311 | -8 | 71093 | EDG GTS | 1.009 | 552 | -8 |
| 71522 | SOM G6 | 0.959 | 70 | 19 | 72669 | TIVER G1 | 0.995 | 189 | 5 | 72670 | TIVER G2 | 0.998 | 92 | 3 |
| 71524 | DGHTNPWR | 1.012 | 185 | 46 | | | | | | | | | | |

| | MW | MX | | MW | MX | | MW | MX |
|---|---|---|---|---|---|---|---|---|
| MILLSTONE | 2216 | 556 | BRPT-ENERGY | 0 | 0 | MIDDLETOWN | 951 | 302 |
| MONTVILLE | 414 | 216 | NORWALK | 0 | 0 | BPTHBR | 375 | -14 |
| NHHARBOUR | 447 | 59 | DEVON | 210 | -28 | WALLINGFORD | 0 | 0 |
| BERKSHIRE | 0 | 0 | LAKEROAD | 560 | 348 | STONYBROOK | 412 | 101 |
| MILLENNIUM | 390 | 74 | BRAYTONPT | 1075 | 223 | HOPE | 548 | 222 |
| FRSQ | 425 | 65 | SOMERSET | 70 | 19 | OSP | 523 | 128 |
| NEA | 249 | 135 | CANAL | 1142 | 359 | PILGRIM | 670 | 96 |
| MASSPWRR | 202 | 87 | ANP-BELLINGHAM | 580 | 159 | ANP-BLACKSTONE | 580 | 300 |
| EMI-TIVERTON | 281 | 8 | EMI-DIGHTON | 185 | 46 | SITHE-EDGAR | 864 | -16 |
| MYSTIC | 378 | -11 | NEWBOSTON | 350 | -48 | SALEMHBR | 702 | 102 |
| SITHE-MYSTIC | 1500 | 186 | SEABROOK | 1318 | 375 | NEWINGTON | 422 | 54 |
| ConEd_Newington | 0 | 0 | SCHILLER | 146 | 75 | MERRIMACK | 433 | 45 |
| WYMAN | 761 | 211 | VTYANKEE | 550 | 150 | BEARSWAMP | 560 | 142 |
| NORTHFIELD | 500 | 160 | ALTRESCO | 110 | 23 | MIS | 150 | 60 |
| AEC | 149 | 78 | RPA | 272 | 67 | WESTBROOK | 529 | 241 |
| BUCKSPORT | 174 | 113 | EXETRTIRE | 26 | 2 | P#145-@1607Line | 51 | 6 |
| P#150-FryBrook | 38 | -4 | P#125-Norwalk | 0 | 0 | P#140-WALLNGFRD | 0 | 0 |
| P#104-WaterSide | 0 | 0 | P#159-Singer | 0 | 0 | P#115-NOR27.6 | 0 | 0 |
| P#125-CosCob | 0 | 0 | P#175&182 | 212 | 77 | | | |

INTERFACE FLOWS

| | | | | | | | | |
|---|---|---|---|---|---|---|---|---|
| NB-NE | 1005 | 44 | ORRING-SOUTH | 1066 | -312 | SUROWIEC-SOUTH | 709 | -182 |
| MEYANKEE-SOUTH | 716 | -249 | MAINE-NH | 1221 | -153 | NNE-SCOBIE+394 | 2931 | 181 |
| SEABROOK-SOUTH | 1719 | 218 | NORTH-SOUTH | 2908 | -102 | CMFD/MOORE-SO | 276 | -3 |
| SNDYPOND-SOUTH | 2077 | 27 | CONN-IMPORT | 2384 | 48 | SWCT-S | 3278 | 247 |
| SWCT-N | 3070 | 191 | NE-NRWLK-STFD | 1464 | -278 | BOSTON IMPORT | 2914 | -479 |
| SEMA/RI EXPORT | 2801 | -180 | SEMA EXPORT | 314 | -436 | EAST-WEST | 2908 | 136 |
| NY-NE 2200(170 | -1004 | -88 | NW VT | 404 | -71 | PLAT PAR | 118 | -37 |
| BLISS PAR | -7 | -16 | UPNY-CONED | 4168 | -89 | CENTRAL_EAST | 1763 | -21<2 |
| CROSS-SOUND | -346 | 134 | CONN-EXPORT | -1812 | 332 | LILCO | 0 | -53 |
| CT_EW> | 3094 | -133 | | | | | | |

HVDC TRANSFERS FROM H-Q

| | | | | | |
|---|---|---|---|---|---|
| CHAT-1 | = 366 | | | HIGHGATE | = 191 |
| MADAWASK | = 0 | PHII-P1 | = 750 | PHII-P2 | = 750 |
| EEL | = 0 | | | | |

BUS VOLTAGES

| | | V | LMT | | | | V | LMT | | | | V | LMT | |
|---|---|---|---|---|---|---|---|---|---|---|---|---|---|---|
| 70001 | CHESTER 345 | 342. | | | 72692 | NWGTN345 345 | 357. | | | 72694 | SEBRK345 345 | 357. | | |
| 71789 | TEWKS 345 | 357. | | | 70759 | MYSTIC 345 | 360. | | | 71797 | MILLBURY 345 | 353. | | |
| 72925 | LUDLOW 345 | 345. | | | 72926 | NRTHFLD 345 | 353. | | | 73106 | SOUTHGTN 345 | 350. | | |
| 73108 | CARD 345 | 352. | | | 73109 | MONTVILE 345 | 357. | | | 73110 | MILLSTNE 345 | 357. | | |
| 73116 | MIDDLTWN 345 | 357. | | | 71801 | BRAYTN P 345 | 358. | | | 71811 | KENT CO. 345 | 351. | | |
| 71326 | BRIDGWTR 345 | 355. | | | 71336 | SHERMAN 345 | 356. | | | 71338 | OS POWER 345 | 356. | | |
| 71337 | WFARNUM 345 | 354. | | | 70772 | W MEDWAY 345 | 355. | | | 70780 | WWALP345 345 | 356. | | |
| 70783 | PILGRIM 345 | 358. | | | 70773 | NEA 336 345 | 356. | | | 71193 | CANAL 345 | 358. | | |
| 71133 | CARVER 345 | 356. | | | 70655 | SHELBRNE 115 | 116. | L | | 70795 | FRMNGHAM 230 | 235. | | |
| 70793 | MDFRM230 230 | 239. | | | 70794 | MDWLT230 230 | 239. | | | 70818 | MYSTC MA 115 | 119. | | |
| 71891 | SALEM HR 115 | 119. | | | 72096 | MILLBURY 115 | 116. | | 126.0 * | 71377 | SOMERSET 115 | 116. | | |
| 72277 | MIDWEYMT 115 | 117. | | | 72259 | MINK 183 115 | 118. | | | 72574 | WARRN 84 115 | 116. | | |
| 72569 | FRSQ 115 | 119. | | 0.0 | 72566 | PHILP183 115 | 119. | | | 72553 | ADMIRAL3 115 | 119. | | |
| 71405 | PAWTUCKT 115 | 112. | | | 71379 | SWANSEA 115 | 115. | | | 72269 | WITNPD43 115 | 115. | | |
| 72278 | FIELD 1 115 | 117. | | | 72266 | READ ST 115 | 114. | | | 72267 | S WREN29 115 | 114. | | |
| 72254 | DEPOT129 115 | 117. | | | 72255 | DEPOT130 115 | 117. | | | 72582 | WOONSCKT 115 | 117. | | |
| 71403 | WFARNUM 115 | 117. | | | 72579 | WOLF 171 115 | 118. | | | 72584 | HARTAVE 115 | 119. | | |
| 72544 | JOHNSTN1 115 | 119. | | 0.0 | 72545 | JOHNSTN2 115 | 119. | | 0.0 | 72560 | DRUMROCK 115 | 116. | | 23.4 |
| 72565 | KENT CO 115 | 116. | | 75.6 * | 72570 | SOCK187 115 | 114. | | | 72571 | SOCK188 115 | 114. | | |
| 72557 | DAVIST85 115 | 115. | | | 72559 | DAVIS 90 115 | 115. | | | 72572 | W.KINGST 115 | 114. | | 37.8 * |
| 72538 | KENYON 115 | 114. | | | 72581 | WOOD RIV 115 | 114. | | | 70512 | ESX B-2 115 | 116. | | |
| 70487 | COOL 345 345 | 357. | | | 70520 | W RUTLND 115 | 116. | | | 73281 | EXETR PF 115 | 117. | | |
| 73115 | PLUMTREE 345 | 346. | | -8.8 | 73135 | NOROH 345 | 347. | | -114.7 | 73293 | NORWALK 345 | 346. | | -100.0 * |
| 73301 | SINGER 345 | 346. | | -200.0 * | 73102 | NH CAPS 115 | 120. | | 42.0 * | 73153 | BRANFORD 115 | 118. | | 37.8 * |
| 73154 | SGTN B 115 | 118. | | 157.2 * | 73162 | WATERSDE 115 | 118. | | 39.6 * | 73165 | STONY HL 115 | 117. | | 0.0 |
| 73168 | GLNBROOK 115 | 119. | | 348.0 * | 73177 | MYSTICCT 115 | 115. | | 50.4 * | 73190 | ROCK RIV 115 | 117. | | 25.2 * |
| 73198 | SOUTHGTN 115 | 118. | | 157.2 * | 73202 | FROST BR 115 | 118. | | 262.0 * | 73210 | MONTVLLE 115 | 117. | | 104.8 * |
| 73230 | HADDAM 115 | 119. | | 37.8 * | 73242 | MANCHSTR 115 | 117. | | 314.4 * | 73243 | BERLIN 115 | 116. | | 132.0 * |
| 73244 | N.BLMFLD 115 | 117. | | 157.2 * | 73260 | FRKLN DR 115 | 118. | | 37.8 * | 73262 | CANTON 115 | 117. | | 50.4 * |
| 73267 | DARIEN 115 | 119. | | 39.6 * | 73668 | E.SHORE 115 | 119. | | 84.0 * | 73671 | NO.HAVEN 115 | 120. | | 42.0 * |
| 73672 | SACKETT 115 | 119. | | 42.0 * | | | | | | | | | | |

AREA/ZONE TOTALS

| | | | | | |
|---|---|---|---|---|---|
| NEPOOL_GEN | 29680 | NEPOOL_LOAD | 30529 | NEPOOL_LOSS | 869 |
| NEPOOL_INT | -1722 | | | | |

This document may contain Critical Energy Infrastructure Information -Do Not Release

Project #191, Shoulder Load, NY-NE 1000MW, With M-N, Without the Project

2005 NPCC LIB - SH CASE W/O PROJECT #191
POST M-N, HIGHIMPORT(CT, SWCT), NY-NE 1000

GENERATION
~~~~~~~~~~

~~~VT/MA~~~

| # | | V | MW | MX | # | | V | MW | MX | # | | V | MW | MX |
|---|---|---|---|---|---|---|---|---|---|---|---|---|---|---|
| 70705 | VTYAK G | 0.978 | 550 | 107 | 73072 | ALT12 PF | 0.000 | 0 | 0 | 73073 | ALT34 PF | 1.017 | 80 | 9 |
| 72986 | BERKPWR | 0.000 | 0 | 0 | 73069 | MAPR1 PF | 1.017 | 56 | 21 | 73070 | MAPR2 PF | 1.016 | 76 | 21 |
| 73071 | MAPR3 PF | 1.011 | 70 | 21 | 73085 | MT.TOM | 0.000 | 0 | 0 | 72512 | BRSWP G1 | 0.000 | 0 | 0 |
| 72513 | BRSWP G2 | 1.021 | 280 | 82 | 73083 | NRTHFD3 | 0.000 | 0 | 0 | 73084 | NRTHFD4 | 0.000 | 0 | 0 |
| 72930 | STNYBK1A | 1.041 | 65 | 10 | 72931 | STNYBK1B | 1.041 | 65 | 10 | 72932 | STNYBK1C | 1.041 | 65 | 10 |
| 72933 | STNYBK 1 | 1.041 | 87 | 11 | 72934 | STNYBK2A | 1.041 | 65 | 10 | 72935 | STNYBK2B | 1.041 | 65 | 10 |
| 73080 | WSPFLD 3 | 0.964 | 107 | -37 | 72244 | MILLENST | 0.000 | 0 | 0 | 72243 | MILLENCT | 0.000 | 0 | 0 |

~~~CT~~~

| # | | V | MW | MX | # | | V | MW | MX | # | | V | MW | MX |
|---|---|---|---|---|---|---|---|---|---|---|---|---|---|---|
| 73562 | MILL#2 | 0.985 | 940 | 75 | 73563 | MILL#3 | 0.985 | 1276 | 99 | 73558 | MONTV#5 | 0.978 | 81 | 6 |
| 73559 | MONTV#6 | 0.000 | 0 | 0 | 73555 | MIDDTN#2 | 0.000 | 0 | 0 | 73556 | MIDDTN#3 | 0.000 | 0 | 0 |
| 73557 | MIDDTN#4 | 0.000 | 0 | 0 | 73565 | LAKERD#1 | 0.000 | 0 | 0 | 73566 | LAKERD#2 | 0.000 | 0 | 0 |
| 73567 | LAKERD#3 | 0.000 | 0 | 0 | 73549 | SMD1112J | 0.000 | 0 | 0 | 73550 | SMD1314J | 1.054 | 72 | 4* |
| 73594 | WALL LV1 | 0.000 | 0 | 0 | 73595 | WALL LV2 | 0.000 | 0 | 0 | 73596 | WALL LV3 | 0.000 | 0 | 0 |
| 73501 | KLEENGT1 | 0.000 | 0 | 0 | 73502 | KLEENGT2 | 0.000 | 0 | 0 | 73503 | KLEEN ST | 0.000 | 0 | 0 |
| 73538 | AESTH PF | 0.992 | 180 | 14 | 73652 | BE 11 | 0.000 | 0 | 0 | 73653 | BE 12 | 0.000 | 0 | 0 |
| 73654 | BE 10 ST | 0.000 | 0 | 0 | 73647 | BPTHBR#2 | 0.000 | 0 | 0 | 73648 | BPTHBR#3 | 0.000 | 0 | 0 |
| 73570 | DEVGAS11 | 0.000 | 0 | 0 | 73571 | DEVGAS12 | 0.000 | 0 | 0 | 73572 | DEVGAS13 | 0.000 | 0 | 0 |
| 73573 | DEVGAS14 | 0.000 | 0 | 0 | 73553 | DVN1516 | 0.000 | 0 | 0 | 73554 | DVN1718 | 0.000 | 0 | 0 |
| 73574 | MILFD#1 | 0.000 | 0 | 0 | 73575 | MILFD#2 | 0.000 | 0 | 0 | 73651 | NH HARBR | 0.970 | 447 | 0 |
| 73551 | NORHAR#1 | 0.000 | 0 | 0 | 73552 | NORHAR#2 | 0.000 | 0 | 0 | 139 | EXT-TIRE | 1.040 | 26 | 2 |
| 90101 | EXTWD_1G | 0.000 | 0 | 0 | 90106 | EXTWD_2G | 0.000 | 0 | 0 | 90111 | EXTWD_3G | 0.000 | 0 | 0 |
| 90116 | EXTWD_4G | 0.000 | 0 | 0 | 90121 | EXTWD_5G | 0.000 | 0 | 0 | 90126 | EXTWD_6G | 0.000 | 0 | 0 |
| 90131 | EXTWD_7G | 0.000 | 0 | 0 | 73290 | PLNFLDG1 | 0.000 | 0 | 0 | 73788 | NORHBR 3 | 0.000 | 0 | 0 |
| 73789 | NORHBR 4 | 0.000 | 0 | 0 | 73790 | NORHBR 5 | 0.000 | 0 | 0 | 73635 | PIERCE | 0.000 | 0 | 0 |
| 73801 | WSIDE1 | 0.000 | 0 | 0 | 73802 | WSIDE2 | 0.000 | 0 | 0 | 73803 | WSIDE3 | 0.000 | 0 | 0 |
| 73598 | BRGPTII | 0.000 | 0 | 0 | 73599 | BRGPTII | 0.000 | 0 | 0 | 73780 | CMEEC | 0.000 | 0 | 0 |
| 73800 | COSCOB 1 | 0.000 | 0 | 0 | 73560 | KLEEN G1 | 0.000 | 0 | 0 | 73561 | KLEEN G2 | 0.000 | 0 | 0 |
| 73302 | MID_112 | 1.032 | 112 | 7 | 73307 | MIDTN12 | 0.000 | 0 | 0 | 73308 | MIDTN13 | 0.000 | 0 | 0 |
| 73591 | MV7 | 0.000 | 0 | 0 | 73592 | MV8 | 0.000 | 0 | 0 | 73581 | NUTMG12 | 1.050 | 106 | 14 |
| 73582 | NUTMG34 | 1.050 | 106 | 14 | 90000 | SHEPAUG1 | 1.000 | 50 | -10 | 90001 | SHEPAUG2 | 1.000 | 50 | -10 |
| 73187 | STEVENSN | 1.020 | 29 | 6* | | | | | | | | | | |

~~~ME/NH~~~

| # | | V | MW | MX | # | | V | MW | MX | # | | V | MW | MX |
|---|---|---|---|---|---|---|---|---|---|---|---|---|---|---|
| 70060 | MIS GT1 | 0.000 | 0 | 0 | 70061 | MIS GT2 | 0.000 | 0 | 0 | 70062 | MIS ST | 1.012 | 150 | 60* |
| 70377 | AEC G1 | 1.085 | 50 | 22 | 70378 | AEC G2 | 1.086 | 50 | 22 | 70379 | AEC G3 | 1.085 | 50 | 22 |
| 70389 | BUCKS G4 | 0.000 | 0 | 0 | 70426 | CHAMP G2 | 0.909 | 15 | 6* | 70424 | CHAMP G3 | 0.988 | 65 | 32* |
| 70374 | | 0.000 | 0 | 0 | 70375 | | 0.000 | 0 | 0 | 70376 | | 0.000 | 0 | 0 |
| 70425 | MEADCOGN | 1.010 | 93 | 15* | 70381 | RPA CG1 | 1.043 | 179 | 42 | 70382 | RPA SG2 | 1.043 | 93 | 15 |
| 70422 | WARRN G1 | 1.049 | 51 | 15* | 70423 | WARRN G2 | 1.068 | 45 | 11* | 70386 | WBK G1 | 0.000 | 0 | 0 |
| 70387 | WBK G2 | 0.000 | 0 | 0 | 70388 | WBK G3 | 0.000 | 0 | 0 | 70365 | WF WY #1 | 1.011 | 50 | 14* |
| 70366 | WF WY #2 | 1.012 | 50 | 14* | 70367 | WF WY #3 | 0.000 | 0 | 0 | 70368 | WF WY #4 | 1.037 | 536 | 210 |
| 71857 | COMRF G1 | 1.015 | 41 | 1 | 71858 | COMRF G2 | 1.015 | 41 | 1 | 71859 | COMRF G3 | 1.015 | 40 | 1 |
| 71860 | COMRF G4 | 1.015 | 40 | 1 | 71861 | MOORE G1 | 1.008 | 40 | -6 | 71862 | MOORE G2 | 0.996 | 48 | -6 |
| 71863 | MOORE G3 | 0.998 | 48 | -3 | 71864 | MOORE G4 | 1.004 | 48 | -3 | 72868 | NWNGT G1 | 0.000 | 0 | 0 |
| 72702 | CONEDG1 | 0.000 | 0 | 0 | 72703 | CONEDG2 | 0.000 | 0 | 0 | 72704 | CONEDG3 | 0.000 | 0 | 0 |
| 71950 | GRANRDG1 | 1.032 | 280 | 16 | 71951 | GRANRDG2 | 0.000 | 0 | 0 | 72701 | AESSTG | 0.000 | 0 | 0 |
| 72866 | MERMK G1 | 1.027 | 113 | 15 | 72867 | MERMK G2 | 0.000 | 0 | 0 | 72869 | SBRK G1 | 1.003 | 1318 | 253 |
| 72870 | SCHILLER | 0.993 | 48 | 2 | 72872 | SCHILLER | 0.993 | 48 | 2 | 72871 | SCHILLER | 0.992 | 50 | 2 |

~~~NEMA~~~

| # | | V | MW | MX | # | | V | MW | MX | # | | V | MW | MX |
|---|---|---|---|---|---|---|---|---|---|---|---|---|---|---|
| 71126 | KEND CT | 0.000 | 0 | 0 | 71067 | MYS8 GTS | 1.017 | 520 | 29 | 71068 | MYS8 ST | 1.022 | 290 | 29 |
| 71069 | MYS9 GTS | 0.971 | 460 | -151 | 71070 | MYS9 ST | 1.019 | 290 | 39 | 71060 | MYST G4 | 0.932 | 133 | -75 |
| 71061 | MYST 5G | 0.000 | 0 | 0 | 71062 | MYST G6 | 0.000 | 0 | 0 | 71063 | MYST G7 | 1.012 | 565 | 29 |
| 71073 | N.BOST 1 | 0.984 | 350 | -48 | 71074 | N.BOST 2 | 0.000 | 0 | 0 | 71946 | SALEM G1 | 1.017 | 81 | 3 |
| 71947 | SALEM G2 | 1.018 | 78 | 3 | 71948 | SALEM G3 | 1.013 | 143 | 6 | 71949 | SALEM G4 | 0.000 | 0 | 0 |
| 72059 | LENERG1 | 0.996 | 65 | -20 | 72060 | LENERG2 | 0.999 | 20 | -15 | | | | | |

~~~SEMA/RI~~~

| # | | V | MW | MX | # | | V | MW | MX | # | | V | MW | MX |
|---|---|---|---|---|---|---|---|---|---|---|---|---|---|---|
| 71095 | ANPBLCK1 | 1.093 | 290 | 150* | 71096 | ANPBLCK2 | 0.000 | 0 | 0 | 72377 | BELL #1 | 1.074 | 290 | 110 |
| 72378 | BELL #2 | 0.000 | 0 | 0 | 72372 | BP #1 GN | 1.002 | 127 | 28 | 72375 | BP #2 GN | 1.002 | 140 | 28 |
| 72370 | BP #3 GN | 1.018 | 410 | 33 | 72371 | BP #4 GN | 1.015 | 421 | 24 | 71531 | OSP1 PF | 1.033 | 77 | 21 |
| 71532 | OSP2 PF | 1.033 | 77 | 21 | 71533 | OSP3 PF | 1.033 | 108 | 28 | 71534 | OSP4 PF | 1.033 | 77 | 21 |
| 71535 | OSP5 PF | 1.033 | 77 | 21 | 71536 | OSP6 PF | 0.000 | 0 | 0 | 71084 | NEA GTPF | 1.046 | 85 | 40* |
| 71085 | NEA GTPF | 1.046 | 85 | 40* | 71086 | NEA STPF | 1.061 | 80 | 55* | 72666 | FRSQ SC1 | 0.995 | 43 | -5 |

This document may contain Critical Energy Infrastructure Information -Do Not Release

| | | | | | | | | | | | |
|---|---|---|---|---|---|---|---|---|---|---|---|
| 72667 | FRSQ SC2 | 0.995 | 43 | -5 | 72668 | FRSQ SC3 | 0.994 | 42 | -5 | 72661 | MANCH09A | 1.013 | 99 | 34 |
| 72662 | MANCH10A | 1.013 | 99 | 34 | 72663 | MANCH11A | 1.014 | 99 | 34 | 72671 | RISE G1 | 0.000 | 0 | 0 |
| 72672 | RISE G2 | 0.000 | 0 | 0 | 72673 | RISE G3 | 0.000 | 0 | 0 | 72373 | MPLP 1PF | 1.006 | 80 | -19 |
| 72374 | MPLP 2PF | 1.010 | 44 | -14 | 71251 | CANAL G1 | 0.000 | 0 | 0 | 71252 | CANAL G2 | 0.000 | 0 | 0 |
| 71094 | PLGRM G1 | 1.039 | 670 | 159 | 71092 | EDG ST | 0.000 | 0 | 0 | 71093 | EDG GTS | 0.000 | 0 | 0 |
| 71522 | SOM G6 | 0.948 | 70 | 0 | 72669 | TIVER G1 | 0.961 | 91 | -50 | 72670 | TIVER G2 | 0.000 | 0 | 0 |
| 71524 | DGHTNPWR | 0.989 | 185 | 16 | | | | | | | | | | |

| | MW | MX | | MW | MX | | MW | MX |
|---|---|---|---|---|---|---|---|---|
| MILLSTONE | 2216 | 174 | BRPT-ENERGY | 0 | 0 | MIDDLETOWN | 112 | 7 |
| MONTVILLE | 81 | 6 | NORWALK | 0 | 0 | BPTHBR | 0 | 0 |
| NHHARBOUR | 447 | 0 | DEVON | 0 | 0 | WALLINGFORD | 0 | 0 |
| BERKSHIRE | 0 | 0 | LAKEROAD | 0 | 0 | STONYBROOK | 412 | 59 |
| MILLENNIUM | 0 | 0 | BRAYTONPT | 1098 | 114 | HOPE | 0 | 0 |
| FRSQ | 425 | 86 | SOMERSET | 70 | 0 | OSP | 416 | 113 |
| NEA | 249 | 135 | CANAL | 0 | 0 | PILGRIM | 670 | 159 |
| MASSPWRR | 202 | 64 | ANP-BELLINGHAM | 290 | 110 | ANP-BLACKSTONE | 290 | 150 |
| EMI-TIVERTON | 91 | -50 | EMI-DIGHTON | 185 | 16 | SITHE-EDGAR | 0 | 0 |
| MYSTIC | 698 | -46 | NEWBOSTON | 350 | -48 | SALEMHBR | 302 | 11 |
| SITHE-MYSTIC | 1560 | -55 | SEABROOK | 1318 | 253 | NEWINGTON | 0 | 0 |
| ConEd_Newington | 0 | 0 | SCHILLER | 146 | 5 | MERRIMACK | 113 | 15 |
| WYMAN | 636 | 238 | VTYANKEE | 550 | 107 | BEARSWAMP | 280 | 82 |
| NORTHFIELD | 0 | 0 | ALTRESCO | 81 | 9 | MIS | 150 | 60 |
| AEC | 149 | 66 | RPA | 272 | 57 | WESTBROOK | 0 | 0 |
| BUCKSPORT | 0 | 0 | EXETRTIRE | 26 | 2 | P#145-@1607Line | 0 | 0 |
| P#150-FryBrook | 0 | 0 | P#125-Norwalk | 0 | 0 | P#140-WALLNGFRD | 0 | 0 |
| P#104-WaterSide | 0 | 0 | P#159-Singer | 0 | 0 | P#115-NOR27.6 | 0 | 0 |
| P#125-CosCob | 0 | 0 | P#175&182 | 212 | 28 | | | |

## INTERFACE FLOWS

| | | | | | | | | |
|---|---|---|---|---|---|---|---|---|
| NB-NE | 1005 | 39 | ORRING-SOUTH | 996 | -354 | SUROWIEC-SOUTH | 888 | -159 |
| MEYANKEE-SOUTH | 746 | -231 | MAINE-NH | 961 | -202 | NNE-SCOBIE+394 | 1885 | -7 |
| SEABROOK-SOUTH | 1100 | 86 | NORTH-SOUTH | 1900 | -55 | CMFD/MOORE-SO | 355 | -49 |
| SNDYPOND-SOUTH | 1817 | -277 | CONN-IMPORT | 2375 | -321 | SWCT-S | 2567 | -279 |
| SWCT-N | 2360 | -274 | NE-NRWLK-STFD | 1005 | -371 | BOSTON IMPORT | 1056 | -555 |
| SEMA/RI EXPORT | 545 | -222 | SEMA EXPORT | -854 | -281 | EAST-WEST | 1708 | -104 |
| NY-NE 2200(170 | 998 | -400 | NW VT | 241 | -77 | PLAT PAR | 115 | -35 |
| BLISS PAR | -7 | -19 | UPNY-CONED | 4183 | -36 | CENTRAL_EAST | 1930 | -102<4 |
| CROSS-SOUND | -346 | 35 | CONN-EXPORT | -2364 | 413 | LILCO | -1 | -47 |
| CT_EW> | 3308 | -403 | | | | | | |

## HVDC TRANSFERS FROM H-Q

| | | | | | |
|---|---|---|---|---|---|
| CHAT-1 | = 366 | | | HIGHGATE | = 191 |
| MADAWASK | = 0 | PHII-P1 | = 750 | PHII-P2 | = 750 |
| EEL | = 0 | | | | |

## BUS VOLTAGES

| | | V | LMT | | | | V | LMT | | | | V | LMT | |
|---|---|---|---|---|---|---|---|---|---|---|---|---|---|---|
| 70001 | CHESTER 345 | 342. | | | 72692 | NWGTN345 345 | 355. | | | 72694 | SEBRK345 345 | 357. | | |
| 71789 | TEWKS 345 | 357. | | | 70759 | MYSTIC 345 | 360. | | | 71797 | MILLBURY 345 | 353. | | |
| 72925 | LUDLOW 345 | 351. | | | 72926 | NRTHFLD 345 | 354. | | | 73106 | SOUTHGTN 345 | 359. | | |
| 73108 | CARD 345 | 356. | | | 73109 | MONTVILE 345 | 357. | | | 73110 | MILLSTNE 345 | 357. | | |
| 73116 | MIDDLTWN 345 | 358. | | | 71801 | BRAYTN P 345 | 358. | | | 71811 | KENT CO. 345 | 353. | | |
| 71326 | BRIDGWTR 345 | 356. | | | 71336 | SHERMAN 345 | 356. | | | 71338 | OS POWER 345 | 356. | | |
| 71337 | WFARNUM 345 | 355. | | | 70772 | W MEDWAY 345 | 355. | | | 70780 | WWALP345 345 | 356. | | |
| 70783 | PILGRIM 345 | 358. | | | 70773 | NEA 336 345 | 356. | | | 71193 | CANAL 345 | 354. | | |
| 71133 | CARVER 345 | 355. | | | 70655 | SHELBRNE 115 | 116. | L | | 70795 | FRMNGHAM 230 | 237. | | |
| 70793 | MDFRM230 230 | 240. | | | 70794 | MDWLT230 230 | 241. | | | 70818 | MYSTC MA 115 | 119. | | |
| 71891 | SALEM HR 115 | 119. | | | 72096 | MILLBURY 115 | 118. | | 126.0 * | 71377 | SOMERSET 115 | 117. | | |
| 72277 | MIDWEYMT 115 | 119. | | | 72259 | MINK 183 115 | 118. | | | 72574 | WARRN 84 115 | 117. | | |
| 72569 | FRSQ 115 | 119. | | 0.0 | 72566 | PHILP183 115 | 119. | | | 72553 | ADMIRAL3 115 | 119. | | |
| 71405 | PAWTUCKT 115 | 115. | | | 71379 | SWANSEA 115 | 117. | | | 72269 | WITNPD43 115 | 117. | | |
| 72278 | FIELD 1 115 | 119. | | | 72266 | READ ST 115 | 117. | | | 72267 | S WREN29 115 | 116. | | |
| 72254 | DEPOT129 115 | 117. | | | 72255 | DEPOT130 115 | 117. | | | 72582 | WOONSCKT 115 | 118. | | |
| 71403 | WFARNUM 115 | 118. | | | 72579 | WOLF 171 115 | 118. | | | 72584 | HARTAVE 115 | 118. | | |
| 72544 | JOHNSTN1 115 | 118. | | 0.0 | 72545 | JOHNSTN2 115 | 118. | | 0.0 | 72560 | DRUMROCK 115 | 117. | | 6.3 |
| 72565 | KENT CO 115 | 117. | | 63.0 | 72570 | SOCK187 115 | 116. | | | 72571 | SOCK188 115 | 116. | | |
| 72557 | DAVIST85 115 | 117. | | | 72559 | DAVIS 90 115 | 117. | | | 72572 | W.KINGST 115 | 116. | | 12.6 |
| 72538 | KENYON 115 | 116. | | | 72581 | WOOD RIV 115 | 116. | | | 70512 | ESX B-2 115 | 116. | | |
| 70487 | COOL 345 345 | 361. | | | 70520 | W RUTLND 115 | 117. | | | 73281 | EXETR PF 115 | 118. | | |
| 73115 | PLUMTREE 345 | 358. | | -75.0 * | 73135 | NOROH 345 | 360. | | -149.9 * | 73293 | NORWALK 345 | 361. | | -100.0 * |
| 73301 | SINGER 345 | 361. | | -200.0 * | 73102 | NH CAPS 115 | 120. | | 0.0 | 73153 | BRANFORD 115 | 120. | | 37.8 * |
| 73154 | SGTN B 115 | 119. | | 157.2 * | 73162 | WATERSDE 115 | 120. | | 39.6 * | 73165 | STONY HL 115 | 117. | | 0.0 |
| 73168 | GLNBROOK 115 | 120. | | 348.0 * | 73177 | MYSTICCT 115 | 117. | | 50.4 * | 73190 | ROCK RIV 115 | 118. | | 25.2 * |
| 73198 | SOUTHGTN 115 | 118. | | 157.2 * | 73202 | FROST BR 115 | 119. | | 0.0 | 73210 | MONTVLLE 115 | 117. | | 104.8 * |
| 73230 | HADDAM 115 | 120. | | 37.8 * | 73242 | MANCHSTR 115 | 116. | | 314.4 * | 73243 | BERLIN 115 | 118. | | 132.0 * |
| 73244 | N.BLMFLD 115 | 116. | | 157.2 * | 73260 | FRKLN DR 115 | 119. | | 37.8 * | 73262 | CANTON 115 | 119. | | 50.4 * |
| 73267 | DARIEN 115 | 120. | | 39.6 * | 73668 | E.SHORE 115 | 120. | | 84.0 * | 73671 | NO.HAVEN 115 | 120. | | 42.0 * |
| 73672 | SACKETT 115 | 120. | | 42.0 * | | | | | | | | | | |

## AREA/ZONE TOTALS

| | | | | | |
|---|---|---|---|---|---|
| NEPOOL_GEN | 18282 | NEPOOL_LOAD | 21509 | NEPOOL_LOSS | 494 |
| NEPOOL_INT | -3725 | | | | |

This document may contain Critical Energy Infrastructure Information -Do Not Release

Project #191, Shoulder Load, NY-NE -1000MW, With M-N, Without the Project

2005 NPCC LIB - SH CASE W/O PROJECT #191
POST M-N, HIGHIMPORT(CT, SWCT), NY-NE -1000

GENERATION
~~~~~~~~~~

~~~VT/MA~~~

| # | V | MW | MX | # | V | MW | MX | # | V | MW | MX |
|---|---|---|---|---|---|---|---|---|---|---|---|
| 70705 VTYAK G | 0.981 | 550 | 119 | 73072 ALT12 PF | 0.000 | 0 | 0 | 73073 ALT34 PF | 1.007 | 80 | 0 |
| 72986 BERKPWR | 1.011 | 280 | 5 | 73069 MAPR1 PF | 1.009 | 56 | 15 | 73070 MAPR2 PF | 1.007 | 76 | 15 |
| 73071 MAPR3 PF | 1.004 | 70 | 15 | 73085 MT.TOM | 0.000 | 0 | 0 | 72512 BRSWP G1 | 0.000 | 0 | 0 |
| 72513 BRSWP G2 | 1.019 | 280 | 77 | 73083 NRTHFD3 | 1.019 | 250 | 80* | 73084 NRTHFD4 | 1.019 | 250 | 80* |
| 72930 STNYBK1A | 1.041 | 65 | 12 | 72931 STNYBK1B | 1.041 | 65 | 12 | 72932 STNYBK1C | 1.041 | 65 | 12 |
| 72933 STNYBK 1 | 1.041 | 87 | 13 | 72934 STNYBK2A | 1.041 | 65 | 12 | 72935 STNYBK2B | 1.041 | 65 | 12 |
| 73080 WSPFLD 3 | 0.965 | 107 | -37 | 72244 MILLENST | 0.996 | 117 | 10 | 72243 MILLENCT | 0.994 | 273 | 23 |

~~~CT~~~

| # | V | MW | MX | # | V | MW | MX | # | V | MW | MX |
|---|---|---|---|---|---|---|---|---|---|---|---|
| 73562 MILL#2 | 0.992 | 940 | 138 | 73563 MILL#3 | 0.992 | 1276 | 183 | 73558 MONTV#5 | 1.007 | 81 | 27* |
| 73559 MONTV#6 | 0.000 | 0 | 0 | 73555 MIDDTN#2 | 0.000 | 0 | 0 | 73556 MIDDTN#3 | 0.000 | 0 | 0 |
| 73557 MIDDTN#4 | 1.000 | 400 | 83 | 73565 LAKERD#1 | 0.000 | 0 | 0 | 73566 LAKERD#2 | 0.000 | 0 | 0 |
| 73567 LAKERD#3 | 0.000 | 0 | 0 | 73549 SMD1112J | 0.000 | 0 | 0 | 73550 SMD1314J | 1.054 | 72 | 4* |
| 73594 WALL LV1 | 0.000 | 0 | 0 | 73595 WALL LV2 | 0.000 | 0 | 0 | 73596 WALL LV3 | 0.000 | 0 | 0 |
| 73501 KLEENGT1 | 0.000 | 0 | 0 | 73502 KLEENGT2 | 0.000 | 0 | 0 | 73503 KLEEN ST | 0.000 | 0 | 0 |
| 73538 AESTH PF | 1.016 | 180 | 61 | 73652 BE 11 | 0.000 | 0 | 0 | 73653 BE 12 | 0.000 | 0 | 0 |
| 73654 BE 10 ST | 0.000 | 0 | 0 | 73647 BPTHBR#2 | 0.000 | 0 | 0 | 73648 BPTHBR#3 | 0.000 | 0 | 0 |
| 73570 DEVGAS11 | 0.000 | 0 | 0 | 73571 DEVGAS12 | 0.000 | 0 | 0 | 73572 DEVGAS13 | 0.000 | 0 | 0 |
| 73573 DEVGAS14 | 0.000 | 0 | 0 | 73553 DVN1516 | 0.000 | 0 | 0 | 73554 DVN1718 | 0.000 | 0 | 0 |
| 73574 MILFD#1 | 0.000 | 0 | 0 | 73575 MILFD#2 | 0.000 | 0 | 0 | 73651 NH HARBR | 0.970 | 447 | 0 |
| 73551 NORHAR#1 | 0.000 | 0 | 0 | 73552 NORHAR#2 | 0.000 | 0 | 0 | 139 EXT-TIRE | 1.040 | 26 | 2 |
| 90101 EXTWD_1G | 0.000 | 0 | 0 | 90106 EXTWD_2G | 0.000 | 0 | 0 | 90111 EXTWD_3G | 0.000 | 0 | 0 |
| 90116 EXTWD_4G | 0.000 | 0 | 0 | 90121 EXTWD_5G | 0.000 | 0 | 0 | 90126 EXTWD_6G | 0.000 | 0 | 0 |
| 90131 EXTWD_7G | 0.000 | 0 | 0 | 73290 PLNFLDG1 | 0.000 | 0 | 0 | 73788 NORHBR 3 | 0.000 | 0 | 0 |
| 73789 NORHBR 4 | 0.000 | 0 | 0 | 73790 NORHBR 5 | 0.000 | 0 | 0 | 73635 PIERCE | 0.000 | 0 | 0 |
| 73801 WSIDE1 | 0.000 | 0 | 0 | 73802 WSIDE2 | 0.000 | 0 | 0 | 73803 WSIDE3 | 0.000 | 0 | 0 |
| 73598 BRGPTII | 0.000 | 0 | 0 | 73599 BRGPTII | 0.000 | 0 | 0 | 73780 CMEEC | 0.000 | 0 | 0 |
| 73800 COSCOB 1 | 0.000 | 0 | 0 | 73560 KLEEN G1 | 1.050 | 43 | 10 | 73561 KLEEN G2 | 0.000 | 0 | 0 |
| 73302 MID_112 | 1.034 | 112 | 10 | 73307 MIDTN12 | 1.109 | 112 | 83 | 73308 MIDTN13 | 0.000 | 0 | 0 |
| 73591 MV7 | 0.000 | 0 | 0 | 73592 MV8 | 0.000 | 0 | 0 | 73581 NUTMG12 | 1.050 | 106 | 26 |
| 73582 NUTMG34 | 1.050 | 106 | 26 | 90000 SHEPAUG1 | 1.000 | 50 | -12 | 90001 SHEPAUG2 | 1.000 | 50 | -12 |
| 73187 STEVENSN | 1.019 | 29 | 6* | | | | | | | | |

~~~ME/NH~~~

| # | V | MW | MX | # | V | MW | MX | # | V | MW | MX |
|---|---|---|---|---|---|---|---|---|---|---|---|
| 70060 MIS GT1 | 0.000 | 0 | 0 | 70061 MIS GT2 | 0.000 | 0 | 0 | 70062 MIS ST | 1.012 | 150 | 60* |
| 70377 AEC G1 | 1.085 | 50 | 22 | 70378 AEC G2 | 1.086 | 50 | 22 | 70379 AEC G3 | 1.086 | 50 | 22 |
| 70389 BUCKS G4 | 0.000 | 0 | 0 | 70426 CHAMP G2 | 0.910 | 15 | 6* | 70424 CHAMP G3 | 0.988 | 65 | 32* |
| 70374 | 0.000 | 0 | 0 | 70375 | 0.000 | 0 | 0 | 70376 | 0.000 | 0 | 0 |
| 70425 MEADCOGN | 1.010 | 93 | 15* | 70381 RPA CG1 | 1.043 | 179 | 42 | 70382 RPA SG2 | 1.043 | 93 | 15 |
| 70422 WARRN G1 | 1.049 | 51 | 15* | 70423 WARRN G2 | 1.068 | 45 | 11* | 70386 WBK G1 | 0.000 | 0 | 0 |
| 70387 WBK G2 | 0.000 | 0 | 0 | 70388 WBK G3 | 0.000 | 0 | 0 | 70365 WF WY #1 | 1.011 | 50 | 14* |
| 70366 WF WY #2 | 1.012 | 50 | 14* | 70367 WF WY #3 | 0.000 | 0 | 0 | 70368 WF WY #4 | 1.038 | 536 | 212 |
| 71857 COMRF G1 | 1.015 | 41 | 1 | 71858 COMRF G2 | 1.015 | 41 | 1 | 71859 COMRF G3 | 1.015 | 40 | 1 |
| 71860 COMRF G4 | 1.015 | 40 | 1 | 71861 MOORE G1 | 1.008 | 40 | -6 | 71862 MOORE G2 | 0.996 | 48 | -6 |
| 71863 MOORE G3 | 0.998 | 48 | -2 | 71864 MOORE G4 | 1.005 | 48 | -2 | 72868 NWNGT G1 | 0.000 | 0 | 0 |
| 72702 CONEDG1 | 0.000 | 0 | 0 | 72703 CONEDG2 | 0.000 | 0 | 0 | 72704 CONEDG3 | 0.000 | 0 | 0 |
| 71950 GRANRDG1 | 1.034 | 280 | 18 | 71951 GRANRDG2 | 0.000 | 0 | 0 | 72701 AESSTG | 0.000 | 0 | 0 |
| 72866 MERMK G1 | 1.029 | 113 | 19 | 72867 MERMK G2 | 0.000 | 0 | 0 | 72869 SBRK G1 | 1.004 | 1318 | 260 |
| 72870 SCHILLER | 0.993 | 48 | 2 | 72872 SCHILLER | 0.993 | 48 | 2 | 72871 SCHILLER | 0.993 | 50 | 2 |

~~~NEMA~~~

| # | V | MW | MX | # | V | MW | MX | # | V | MW | MX |
|---|---|---|---|---|---|---|---|---|---|---|---|
| 71126 KEND CT | 0.000 | 0 | 0 | 71067 MYS8 GTS | 1.018 | 520 | 33 | 71068 MYS8 ST | 1.024 | 290 | 33 |
| 71069 MYS9 GTS | 0.988 | 460 | -75 | 71070 MYS9 ST | 1.021 | 290 | 45 | 71060 MYST G4 | 0.932 | 133 | -75 |
| 71061 MYST 5G | 0.961 | 109 | -75 | 71062 MYST G6 | 0.000 | 0 | 0 | 71063 MYST G7 | 1.013 | 565 | 33 |
| 71073 N.BOST 1 | 0.984 | 350 | -48 | 71074 N.BOST 2 | 0.000 | 0 | 0 | 71946 SALEM G1 | 1.017 | 81 | 2 |
| 71947 SALEM G2 | 1.017 | 78 | 2 | 71948 SALEM G3 | 1.012 | 143 | 4 | 71949 SALEM G4 | 1.011 | 400 | 11 |
| 72059 LENERG1 | 0.994 | 65 | -20 | 72060 LENERG2 | 0.997 | 20 | -15 | | | | |

~~~SEMA/RI~~~

| # | V | MW | MX | # | V | MW | MX | # | V | MW | MX |
|---|---|---|---|---|---|---|---|---|---|---|---|
| 71095 ANPBLCK1 | 1.092 | 290 | 150* | 71096 ANPBLCK2 | 0.000 | 0 | 0 | 72377 BELL #1 | 0.000 | 0 | 0 |
| 72378 BELL #2 | 0.000 | 0 | 0 | 72372 BP #1 GN | 0.000 | 0 | 0 | 72375 BP #2 GN | 0.000 | 0 | 0 |
| 72370 BP #3 GN | 1.024 | 474 | 83 | 72371 BP #4 GN | 0.000 | 0 | 0 | 71531 OSP1 PF | 1.044 | 77 | 29 |
| 71532 OSP2 PF | 1.044 | 77 | 29 | 71533 OSP3 PF | 1.045 | 108 | 39 | 71534 OSP4 PF | 1.044 | 77 | 29 |
| 71535 OSP5 PF | 1.044 | 77 | 29 | 71536 OSP6 PF | 0.000 | 0 | 0 | 71084 NEA GTPF | 1.045 | 85 | 40* |

This document may contain Critical Energy Infrastructure Information -Do Not Release

| | | | | | | | | | | | | | | |
|---|---|---|---|---|---|---|---|---|---|---|---|---|---|---|
| 71085 | NEA GTPF | 1.045 | 85 | 40* | 71086 | NEA STPF | 1.060 | 80 | 55* | 72666 | FRSQ SC1 | 0.992 | 43 | -5 |
| 72667 | FRSQ SC2 | 0.992 | 43 | -5 | 72668 | FRSQ SC3 | 0.991 | 42 | -5 | 72661 | MANCH09A | 0.998 | 99 | 10 |
| 72662 | MANCH10A | 0.998 | 99 | 10 | 72663 | MANCH11A | 0.998 | 99 | 10 | 72671 | RISE G1 | 0.000 | 0 | 0 |
| 72672 | RISE G2 | 1.035 | 176 | 53 | 72673 | RISE G3 | 1.034 | 196 | 53 | 72373 | MPLP 1PF | 0.000 | 0 | 0 |
| 72374 | MPLP 2PF | 1.007 | 44 | -21 | 71251 | CANAL G1 | 1.043 | 566 | 239* | 71252 | CANAL G2 | 0.000 | 0 | 0 |
| 71094 | PLGRM G1 | 1.024 | 670 | 42 | 71092 | EDG ST | 0.000 | 0 | 0 | 71093 | EDG GTS | 0.000 | 0 | 0 |
| 71522 | SOM G6 | 0.952 | 70 | 0 | 72669 | TIVER G1 | 0.000 | 0 | 0 | 72670 | TIVER G2 | 0.000 | 0 | 0 |
| 71524 | DGHTNPWR | 0.980 | 185 | 6 | | | | | | | | | | |

| | MW | MX | | MW | MX | | MW | MX |
|---|---|---|---|---|---|---|---|---|
| MILLSTONE | 2216 | 322 | BRPT-ENERGY | 0 | 0 | MIDDLETOWN | 667 | 186 |
| MONTVILLE | 81 | 27 | NORWALK | 0 | 0 | BPTHBR | 0 | 0 |
| NHHARBOUR | 447 | 0 | DEVON | 0 | 0 | WALLINGFORD | 0 | 0 |
| BERKSHIRE | 280 | 5 | LAKEROAD | 0 | 0 | STONYBROOK | 412 | 71 |
| MILLENNIUM | 390 | 33 | BRAYTONPT | 474 | 83 | HOPE | 372 | 105 |
| FRSQ | 425 | 17 | SOMERSET | 70 | 0 | OSP | 416 | 157 |
| NEA | 249 | 135 | CANAL | 566 | 239 | PILGRIM | 670 | 42 |
| MASSPWRR | 202 | 45 | ANP-BELLINGHAM | 0 | 0 | ANP-BLACKSTONE | 290 | 150 |
| EMI-TIVERTON | 0 | 0 | EMI-DIGHTON | 185 | 6 | SITHE-EDGAR | 0 | 0 |
| MYSTIC | 807 | -117 | NEWBOSTON | 350 | -48 | SALEMHBR | 702 | 19 |
| SITHE-MYSTIC | 1560 | 37 | SEABROOK | 1318 | 260 | NEWINGTON | 0 | 0 |
| ConEd_Newington | 0 | 0 | SCHILLER | 146 | 6 | MERRIMACK | 113 | 19 |
| WYMAN | 636 | 240 | VTYANKEE | 550 | 119 | BEARSWAMP | 280 | 77 |
| NORTHFIELD | 500 | 160 | ALTRESCO | 81 | 0 | MIS | 150 | 60 |
| AEC | 149 | 66 | RPA | 272 | 57 | WESTBROOK | 0 | 0 |
| BUCKSPORT | 0 | 0 | EXETRTIRE | 26 | 2 | P#145-@1607Line | 0 | 0 |
| P#150-FryBrook | 0 | 0 | P#125-Norwalk | 0 | 0 | P#140-WALLNGFRD | 0 | 0 |
| P#104-WaterSide | 0 | 0 | P#159-Singer | 0 | 0 | P#115-NOR27.6 | 0 | 0 |
| P#125-CosCob | 0 | 0 | P#175&182 | 212 | 53 | | | |

INTERFACE FLOWS

| | | | | | | | | |
|---|---|---|---|---|---|---|---|---|
| NB-NE | 1005 | 38 | ORRING-SOUTH | 996 | -355 | SUROWIEC-SOUTH | 888 | -158 |
| MEYANKEE-SOUTH | 747 | -224 | MAINE-NH | 962 | -199 | NNE-SCOBIE+394 | 1887 | 3 |
| SEABROOK-SOUTH | 1076 | 91 | NORTH-SOUTH | 1890 | -51 | CMFD/MOORE-SO | 349 | -47 |
| SNDYPOND-SOUTH | 1811 | -265 | CONN-IMPORT | 1885 | -285 | SWCT-S | 2572 | -219 |
| SWCT-N | 2364 | -252 | NE-NRWLK-STFD | 1005 | -373 | BOSTON IMPORT | 558 | -533 |
| SEMA/RI EXPORT | 397 | -156 | SEMA EXPORT | -382 | -253 | EAST-WEST | 2038 | -102 |
| NY-NE 2200(170 | -1003 | -293 | NW VT | 240 | -76 | PLAT PAR | 115 | -34 |
| BLISS PAR | -8 | -18 | UPNY-CONED | 4918 | 263 | CENTRAL_EAST | 1700 | -37<2 |
| CROSS-SOUND | -346 | 93 | CONN-EXPORT | -1867 | 449 | LILCO | 0 | -49 |
| CT_EW> | 2806 | -294 | | | | | | |

HVDC TRANSFERS FROM H-Q

| | | | | | |
|---|---|---|---|---|---|
| CHAT-1 = | 366 | | | HIGHGATE = | 191 |
| MADAWASK = | 0 | PHII-P1 = | 750 | PHII-P2 = | 750 |
| EEL = | 0 | | | | |

BUS VOLTAGES

| | | V | LMT | | | | V | LMT | | | | V | LMT | |
|---|---|---|---|---|---|---|---|---|---|---|---|---|---|---|
| 70001 | CHESTER | 345 | 342. | | 72692 | NWGTN345 | 345 | 355. | | 72694 | SEBRK345 | 345 | 357. | |
| 71789 | TEWKS | 345 | 357. | | 70759 | MYSTIC | 345 | 360. | | 71797 | MILLBURY | 345 | 353. | |
| 72925 | LUDLOW | 345 | 349. | | 72926 | NRTHFLD | 345 | 355. | | 73106 | SOUTHGTN | 345 | 354. | |
| 73108 | CARD | 345 | 355. | | 73109 | MONTVILE | 345 | 357. | | 73110 | MILLSTNE | 345 | 357. | |
| 73116 | MIDDLTWN | 345 | 357. | | 71801 | BRAYTN P | 345 | 358. | | 71811 | KENT CO. | 345 | 355. | |
| 71326 | BRIDGWTR | 345 | 356. | | 71336 | SHERMAN | 345 | 356. | | 71338 | OS POWER | 345 | 356. | |
| 71337 | WFARNUM | 345 | 356. | | 70772 | W MEDWAY | 345 | 355. | | 70780 | WWALP345 | 345 | 356. | |
| 70783 | PILGRIM | 345 | 358. | | 70773 | NEA 336 | 345 | 356. | | 71193 | CANAL | 345 | 359. | |
| 71133 | CARVER | 345 | 358. | | 70655 | SHELBRNE | 115 | 116. | L | 70795 | FRMNGHAM | 230 | 237. | |
| 70793 | MDFRM230 | 230 | 240. | | 70794 | MDWLT230 | 230 | 241. | | 70818 | MYSTC MA | 115 | 119. | |
| 71891 | SALEM HR | 115 | 119. | | 72096 | MILLBURY | 115 | 118. | 126.0 * | 71377 | SOMERSET | 115 | 117. | |
| 72277 | MIDWEYMT | 115 | 119. | | 72259 | MINK 183 | 115 | 118. | | 72574 | WARRN 84 | 115 | 117. | |
| 72569 | FRSQ | 115 | 119. | 0.0 | 72566 | PHILP183 | 115 | 119. | | 72553 | ADMIRAL3 | 115 | 119. | |
| 71405 | PAWTUCKT | 115 | 115. | | 71379 | SWANSEA | 115 | 117. | | 72269 | WITNPD43 | 115 | 117. | |
| 72278 | FIELD 1 | 115 | 120. | | 72266 | READ ST | 115 | 117. | | 72267 | S WREN29 | 115 | 116. | |
| 72254 | DEPOT129 | 115 | 117. | | 72255 | DEPOT130 | 115 | 117. | | 72582 | WOONSCKT | 115 | 118. | |
| 71403 | WFARNUM | 115 | 118. | | 72579 | WOLF 171 | 115 | 118. | | 72584 | HARTAVE | 115 | 119. | |
| 72544 | JOHNSTN1 | 115 | 119. | 0.0 | 72545 | JOHNSTN2 | 115 | 119. | 0.0 | 72560 | DRUMROCK | 115 | 118. | 6.3 |
| 72565 | KENT CO | 115 | 118. | 63.0 | 72570 | SOCK187 | 115 | 117. | | 72571 | SOCK188 | 115 | 117. | |
| 72557 | DAVIST85 | 115 | 117. | | 72559 | DAVIS 90 | 115 | 117. | | 72572 | W.KINGST | 115 | 117. | 12.6 |
| 72538 | KENYON | 115 | 116. | | 72581 | WOOD RIV | 115 | 116. | | 70512 | ESX B-2 | 115 | 116. | |
| 70487 | COOL 345 | 345 | 361. | | 70520 | W RUTLND | 115 | 117. | | 73281 | EXETR PF | 115 | 118. | |
| 73115 | PLUMTREE | 345 | 352. | -75.0 * | 73135 | NOROH | 345 | 355. | -149.9 * | 73293 | NORWALK | 345 | 356. | -100.0 * |
| 73301 | SINGER | 345 | 356. | -200.0 * | 73102 | NH CAPS | 115 | 120. | 0.0 | 73153 | BRANFORD | 115 | 119. | 37.8 * |
| 73154 | SGTN B | 115 | 118. | 157.2 * | 73162 | WATERSDE | 115 | 120. | 39.6 * | 73165 | STONY HL | 115 | 117. | 0.0 |
| 73168 | GLNBROOK | 115 | 120. | 348.0 * | 73177 | MYSTICCT | 115 | 118. | 50.4 * | 73190 | ROCK RIV | 115 | 118. | 25.2 * |
| 73198 | SOUTHGTN | 115 | 118. | 157.2 * | 73202 | FROST BR | 115 | 118. | 0.0 | 73210 | MONTVLLE | 115 | 117. | 104.8 * |
| 73230 | HADDAM | 115 | 119. | 37.8 * | 73242 | MANCHSTR | 115 | 116. | 314.4 * | 73243 | BERLIN | 115 | 118. | 132.0 * |
| 73244 | N.BLMFLD | 115 | 116. | 157.2 * | 73260 | FRKLN DR | 115 | 119. | 37.8 * | 73262 | CANTON | 115 | 118. | 50.4 * |
| 73267 | DARIEN | 115 | 120. | 39.6 * | 73668 | E.SHORE | 115 | 120. | 84.0 * | 73671 | NO.HAVEN | 115 | 120. | 42.0 * |
| 73672 | SACKETT | 115 | 120. | 42.0 * | | | | | | | | | | |

AREA/ZONE TOTALS

| | | | | | |
|---|---|---|---|---|---|
| NEPOOL_GEN | 20368 | NEPOOL_LOAD | 21509 | NEPOOL_LOSS | 558 |
| NEPOOL_INT | -1702 | | | | |

This document may contain Critical Energy Infrastructure Information -Do Not Release

Appendix

# B

# New England 345kV and Eastern CT One-Line Power Flow Diagrams

This appendix contains one-line power flow diagrams of the base cases without the Project:

- 2010-PK_1A-NY-NE=1000: Summer Peak-Dispatch Without Project
- 2010-PK_1A-NY-NE= -1000: Summer Peak-Dispatch Without Project
- 2010-SH_1A-NY-NE=1000: Shoulder Load-Dispatch Without Project
- 2010-SH_1A-NY-NE= -1000: Shoulder Load-Dispatch Without Project



This document may contain Critical Energy Infrastructure Information -Do Not Release

# NEW ENGLAND 345 KV

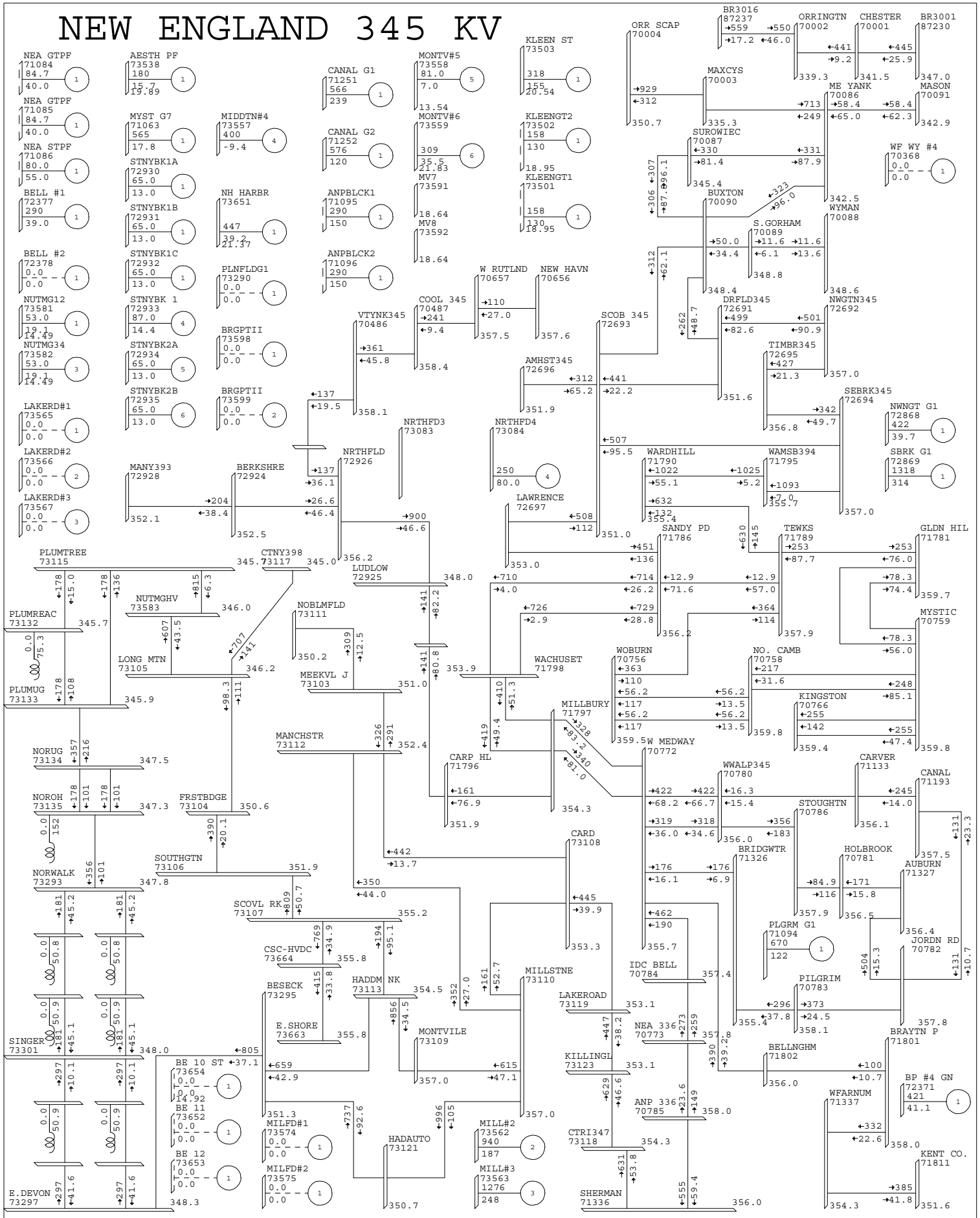


SHAW POWER TECHNOLOGIES INC.

2005 NPCC LIB - PK CASE W/O PROJECT #191
POST M-N, HIGHIMPORT(CT, SWCT), NY-NE 1000
THU, JAN 31 2008 10:08

90 % RATEA
0.950UV 1.050 OV
KV: ≤115 ,≤138 ,≤345

This document may contain Critical Energy Infrastructure Information -Do Not Release

# SWCT 115kV

2005 NPCC LIB - PK CASE W/O PROJECT #191
POST M-N, HIGHIMPORT(CT, SWCT), NY-NE 1000
THU, JAN 31 2008 10:17

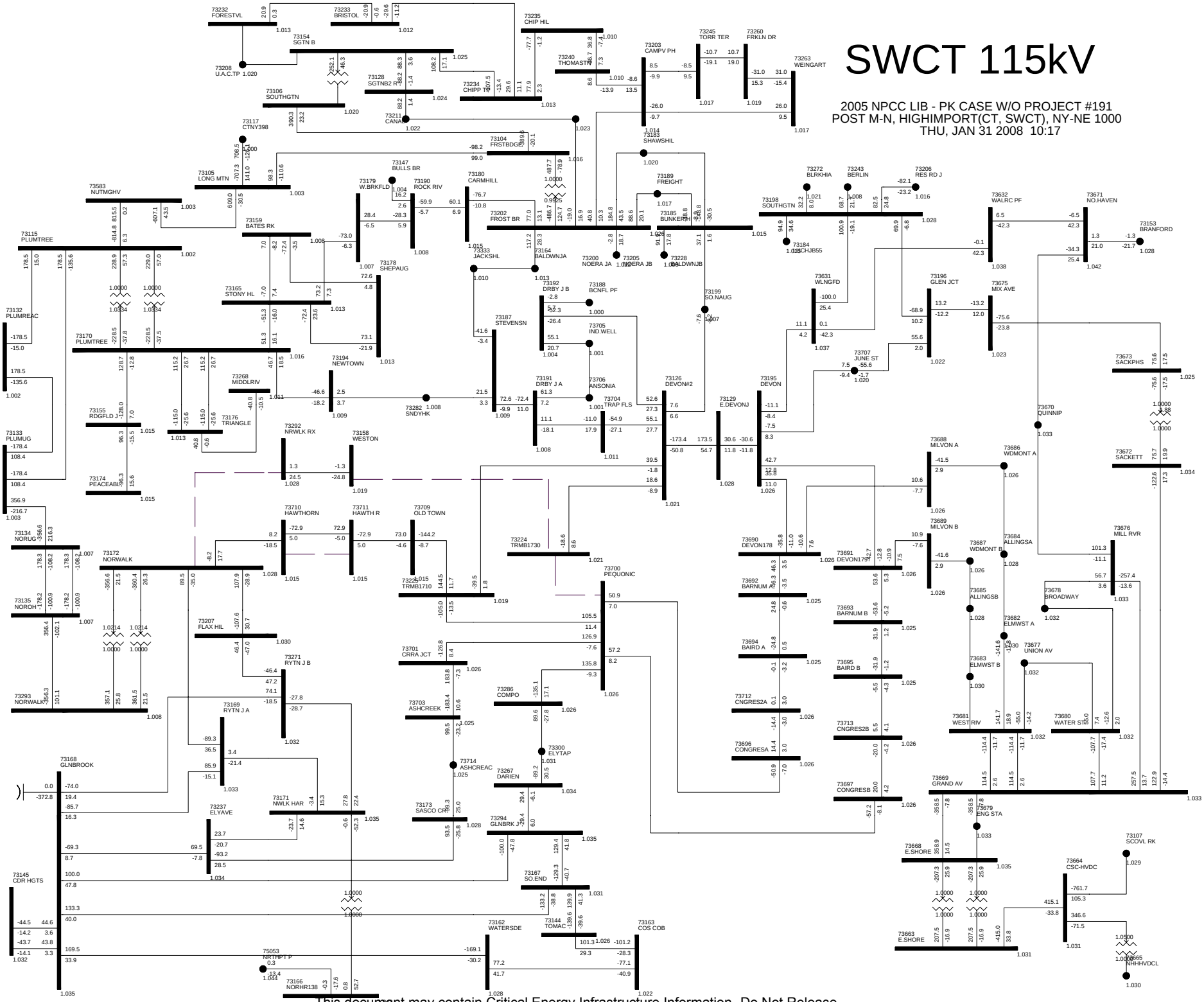


This document may contain Critical Energy Infrastructure Information -Do Not Release

# NEW ENGLAND 345 KV

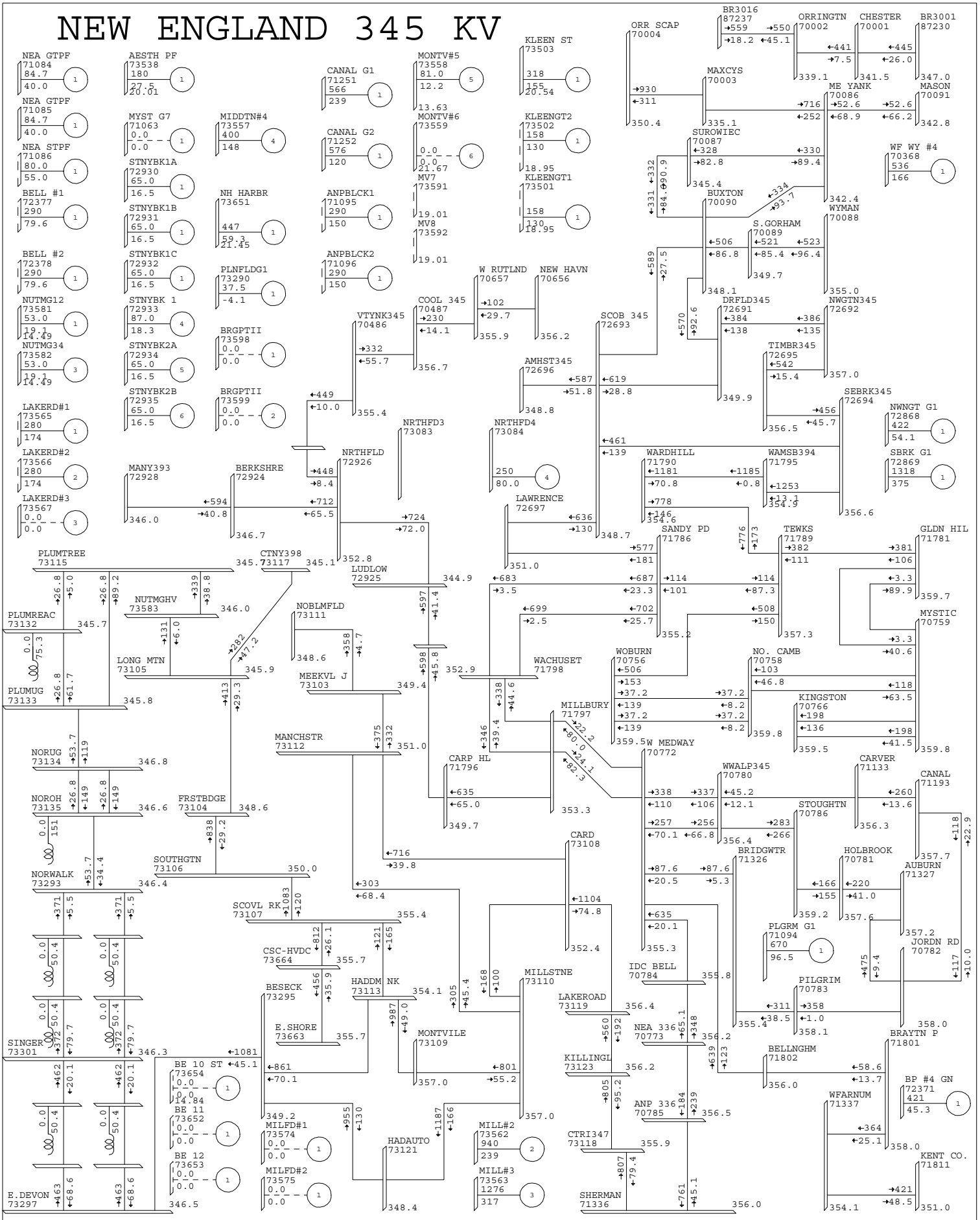


SHAW POWER TECHNOLOGIES INC.

2005 NPCC LIB - PK CASE W/O PROJECT #191
POST M-N, HIGHIMPORT(CT, SWCT), NY-NE -1000
THU, JAN 31 2008 10:09

90 % RATEA
0.950UV 1.050OV
KV: ≤115 ,≤138 ,≤345

This document may contain Critical Energy Infrastructure Information -Do Not Release

# SWCT 115kV

2005 NPCC LIB - PK CASE W/O PROJECT #191
POST M-N, HIGHIMPORT(CT, SWCT), NY-NE -1000
THU, JAN 31 2008 10:19

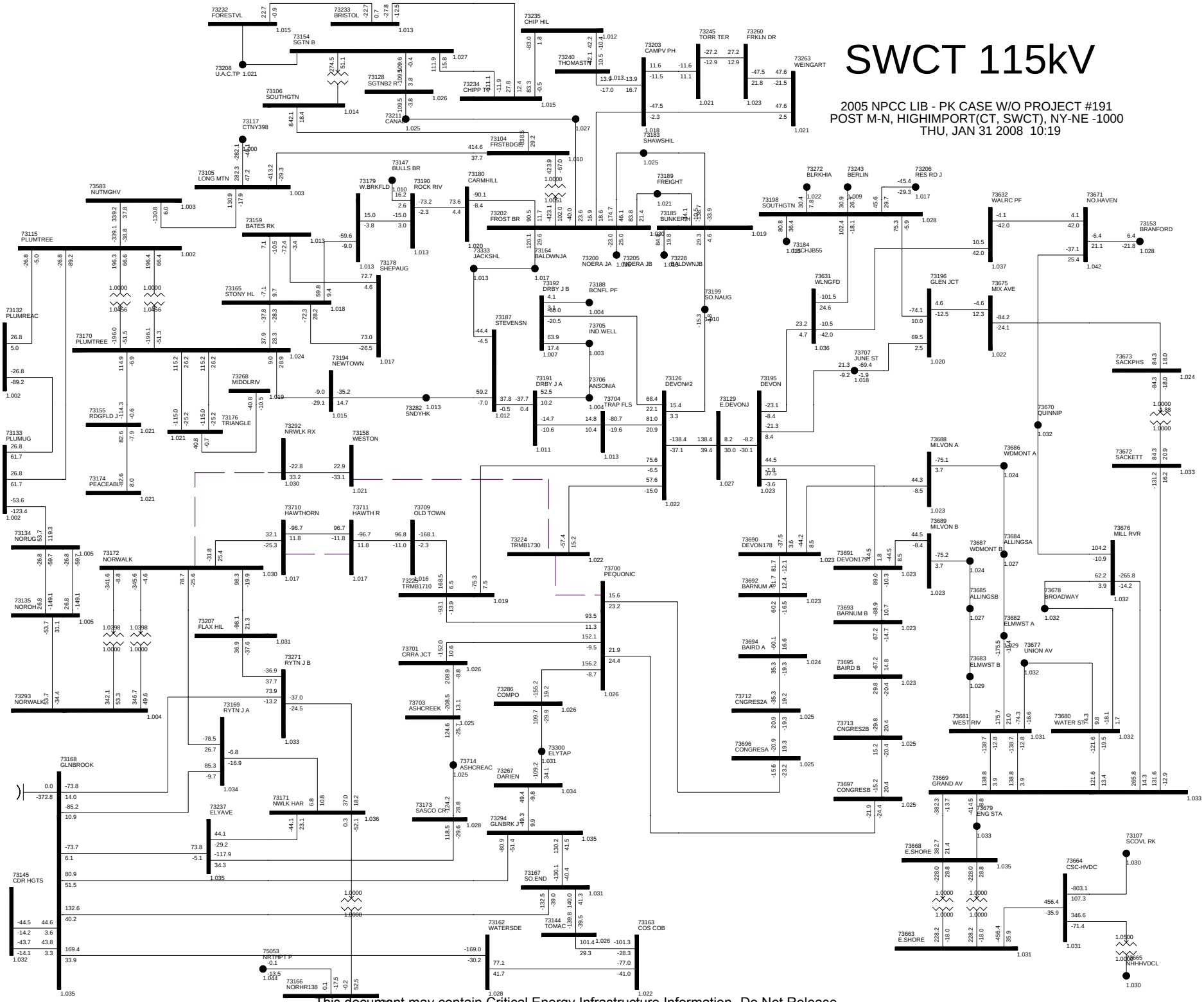


This document may contain Critical Energy Infrastructure Information -Do Not Release

# NEW ENGLAND 345 KV

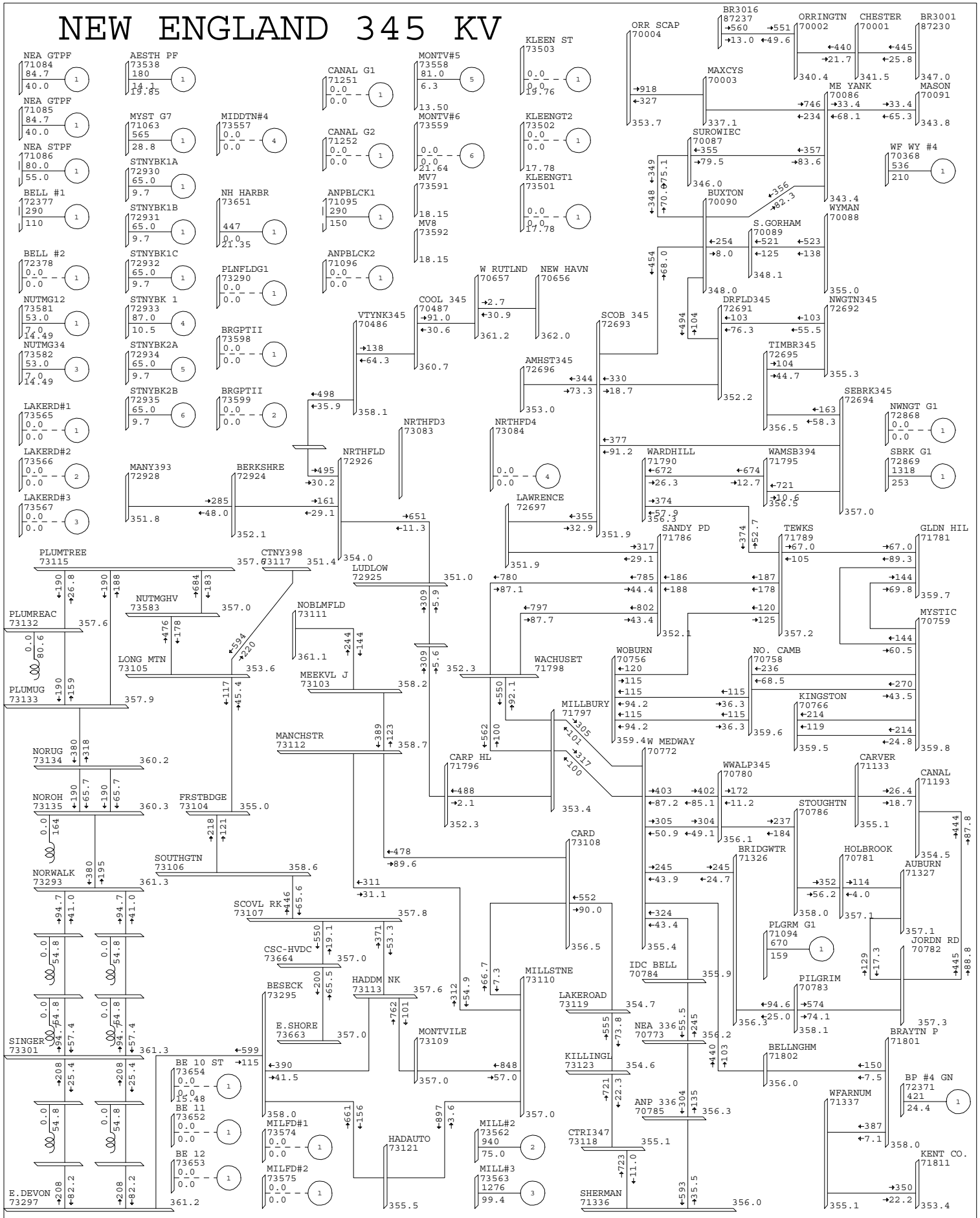


SHAW POWER TECHNOLOGIES INC.

2005 NPCC LIB - SH CASE W/O PROJECT #191
POST M-N, HIGHIMPORT(CT, SWCT), NY-NE 1000
THU, JAN 31 2008 10:09

90 % RATEA
0.950UV 1.050 OV
KV: ≤115 ,≤138 ,≤345

This document may contain Critical Energy Infrastructure Information -Do Not Release

# SWCT 115kV

2005 NPCC LIB - SH CASE W/O PROJECT #191
POST M-N, HIGHIMPORT(CT, SWCT), NY-NE 1000
THU, JAN 31 2008 10:19

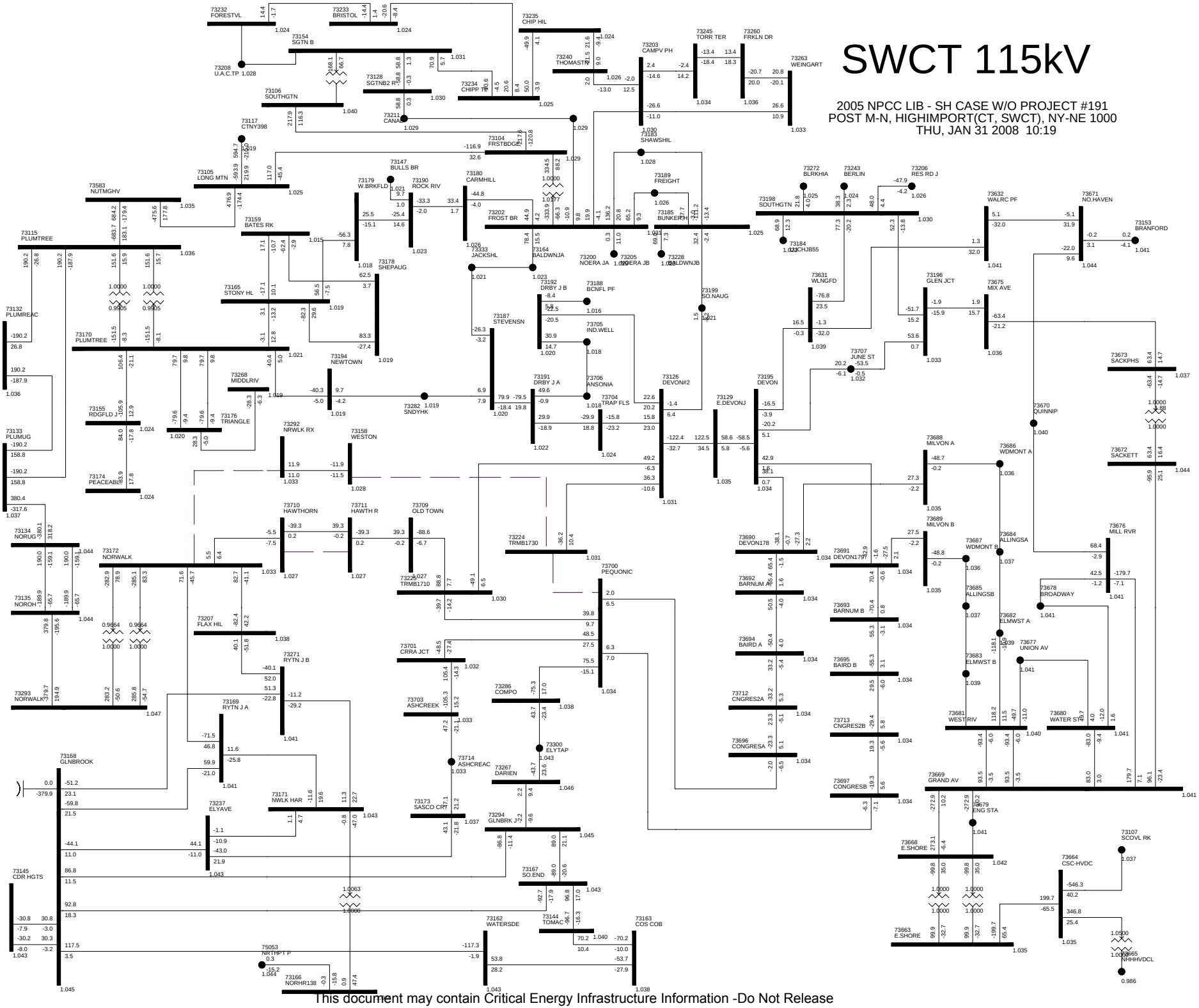


This document may contain Critical Energy Infrastructure Information -Do Not Release

# NEW ENGLAND 345 KV

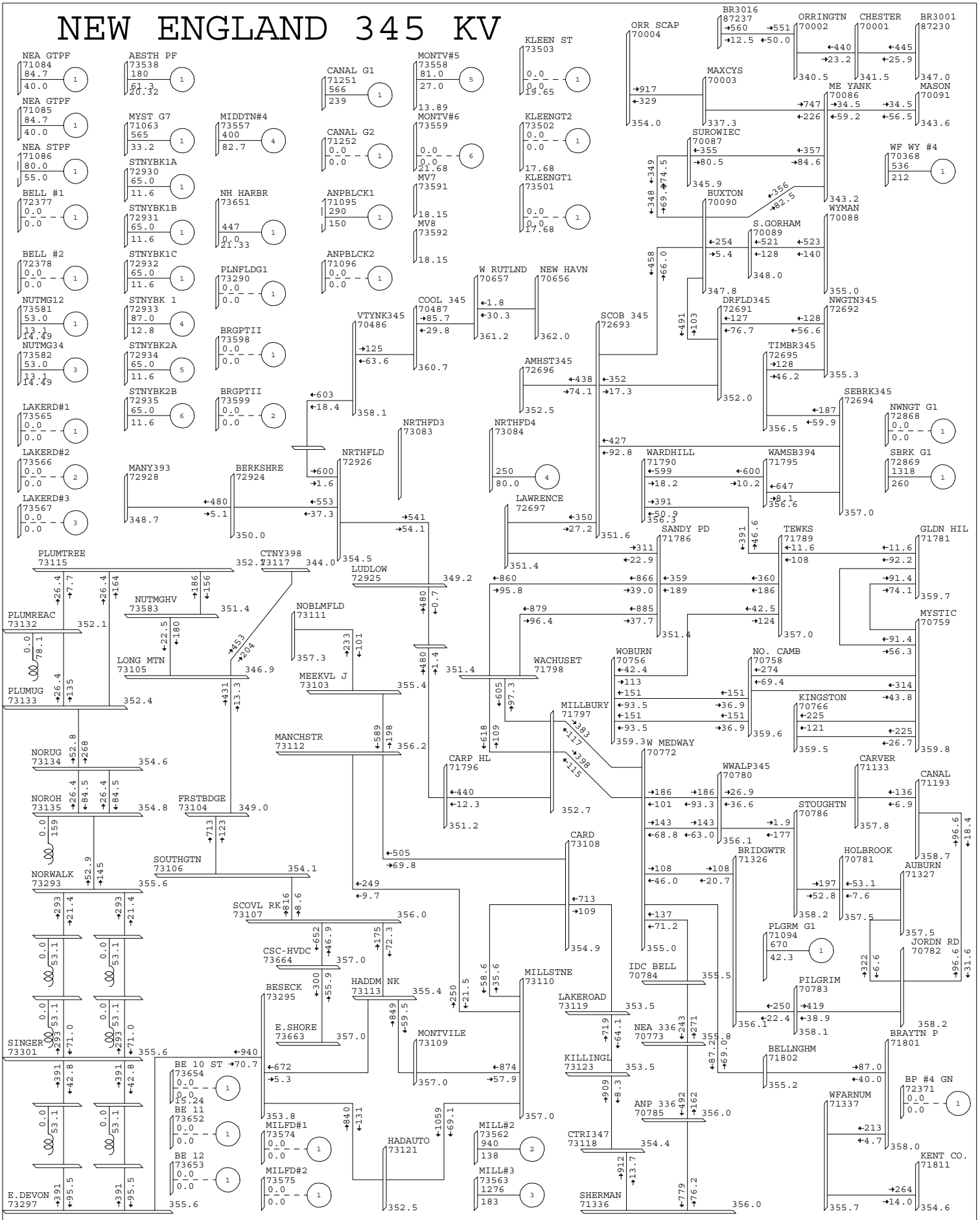


SHAW POWER TECHNOLOGIES INC.

2005 NPCC LIB - SH CASE W/O PROJECT #191
POST M-N, HIGHIMPORT(CT, SWCT), NY-NE -1000
THU, JAN 31 2008 10:09

90 % RATEA
0.950UV 1.050OV
KV: ≤115 ,≤138 ,≤345

This document may contain Critical Energy Infrastructure Information -Do Not Release

# SWCT 115kV

2005 NPCC LIB - SH CASE W/O PROJECT #191
POST M-N, HIGHIMPORT(CT, SWCT), NY-NE -1000
THU, JAN 31 2008 10:19

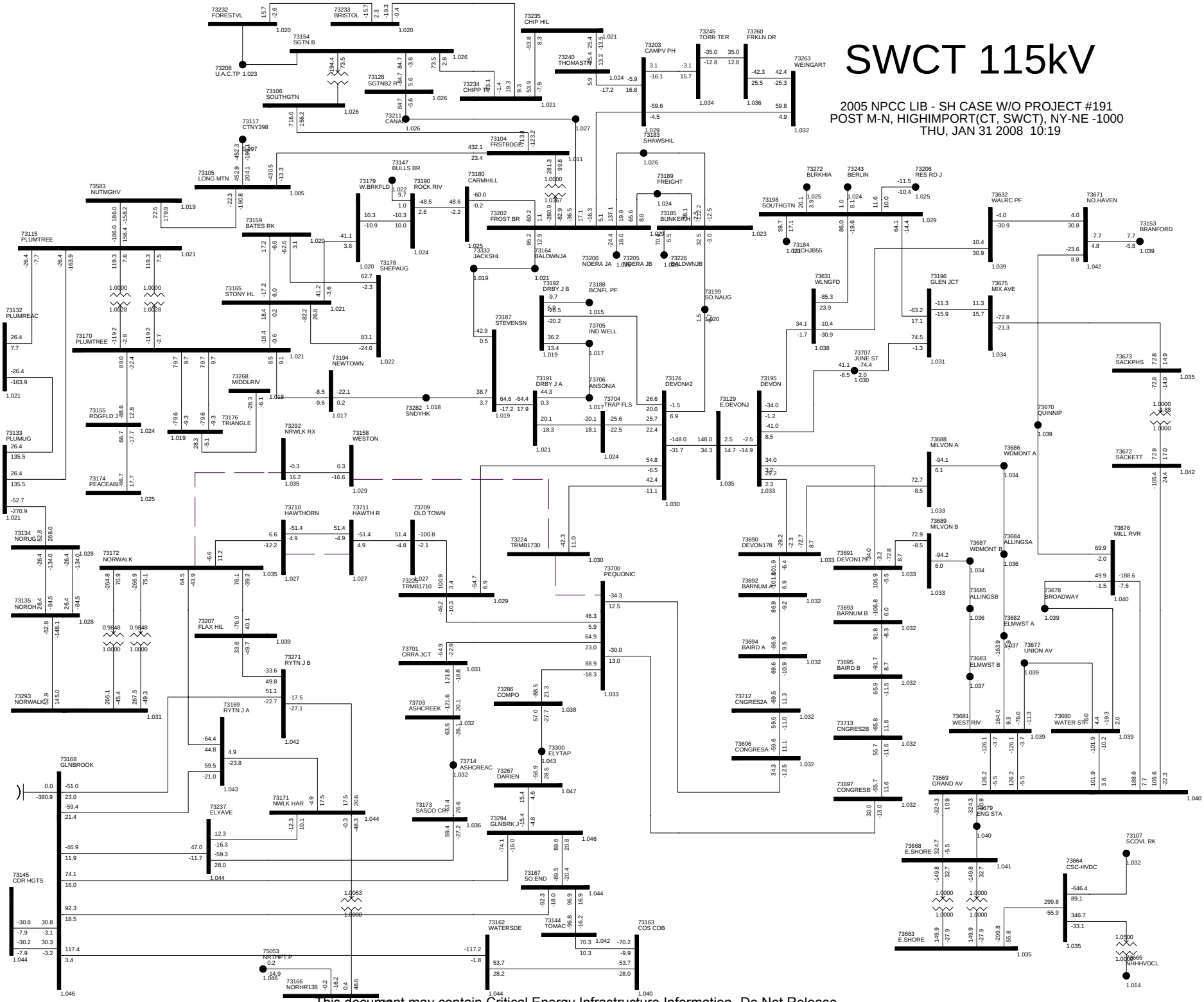


This document may contain Critical Energy Infrastructure Information -Do Not Release

Appendix

C

# List of Contingencies



This document may contain Critical Energy Infrastructure Information -Do Not Release

```
/ Contingency list generated on Wed Oct 11 17:30:44 2006
/ Total 364 Contingencies
/ busnumbers
 Contingency '113091001SPS'
   Open branch from bus 73701 to bus 73702 ckt 1  /  73701 CRRA JCT 115 73702 CRRA XFO 115 1
   Open branch from bus 73700 to bus 73701 ckt 1  /  73700 PEQUONIC 115 73701 CRRA JCT 115 1
   Open branch from bus 73701 to bus 73703 ckt 1  /  73701 CRRA JCT 115 73703 ASHCREEK 115 1
   Open branch from bus 73700 to bus 73286 ckt 1  /  73700 PEQUONIC 115 73286 COMPO    115 1
     Set      bus 73648 generation to     150.0 MW    /  73648 BPTHBR#322.0
 end
 Contingency '1130-1430SPS'
   Open branch from bus 73700 to bus 73286 ckt 1  /  73700 PEQUONIC 115 73286 COMPO    115 1
   Open branch from bus 73173 to bus 73237 ckt 1  /  73173 SASCO CR 115 73237 ELYAVE   115 1
   Open branch from bus 73714 to bus 73173 ckt 1  /  73714 ASHCREAC 115 73173 SASCO CR 115 1
     Set      bus 73648 generation to     150.0 MW    /  73648 BPTHBR#322.0
 end
 Contingency '1416-1890SPS'
   Open branch from bus 73173 to bus 73237 ckt 1  /  73173 SASCO CR 115 73237 ELYAVE   115 1
   Open branch from bus 73168 to bus 73237 ckt 1  /  73168 GLNBROOK 115 73237 ELYAVE   115 1
   Open branch from bus 73171 to bus 73237 ckt 1  /  73171 NWLK HAR 115 73237 ELYAVE   115 1
   Open branch from bus 73700 to bus 73286 ckt 1  /  73700 PEQUONIC 115 73286 COMPO    115 1
   Open branch from bus 73267 to bus 73300 ckt 1  /  73267 DARIEN   115 73300 ELYTAP   115 1
   Open branch from bus 73286 to bus 73300 ckt 1  /  73286 COMPO    115 73300 ELYTAP   115 1
     Set      bus 73648 generation to     150.0 MW    /  73648 BPTHBR#322.0
 end
 Contingency '1890-1977SPS'
   Open branch from bus 73168 to bus 73294 ckt 1  /  73168 GLNBROOK 115 73294 GLNBRK J 115 1
   Open branch from bus 73167 to bus 73294 ckt 1  /  73167 SO.END   115 73294 GLNBRK J 115 1
   Open branch from bus 73267 to bus 73294 ckt 1  /  73267 DARIEN   115 73294 GLNBRK J 115 1
   Open branch from bus 73173 to bus 73237 ckt 1  /  73173 SASCO CR 115 73237 ELYAVE   115 1
   Open branch from bus 73168 to bus 73237 ckt 1  /  73168 GLNBROOK 115 73237 ELYAVE   115 1
   Open branch from bus 73171 to bus 73237 ckt 1  /  73171 NWLK HAR 115 73237 ELYAVE   115 1
     Set      bus 73648 generation to     150.0 MW    /  73648 BPTHBR#322.0
 end
 Contingency 'GRNDAV2TSPS'
   Open branch from bus 73669 to bus 73680 ckt 1  /  73669 GRAND AV 115 73680 WATER ST 115 1
   Open branch from bus 73669 to bus 73676 ckt 1  /  73669 GRAND AV 115 73676 MILL RVR 115 1
 end
 Contingency 'GRDAV2TSPSA'
   Open branch from bus 73669 to bus 73680 ckt 1  /  73669 GRAND AV 115 73680 WATER ST 115 1
   Open branch from bus 73669 to bus 73676 ckt 1  /  73669 GRAND AV 115 73676 MILL RVR 115 1
     Set      bus 73651 generation to     0.0 MW    /  73651 NH HARBR22.0
 end
 Contingency 'GRDAV2TSPSB'
   Open branch from bus 73669 to bus 73680 ckt 1  /  73669 GRAND AV 115 73680 WATER ST 115 1
   Open branch from bus 73669 to bus 73676 ckt 1  /  73669 GRAND AV 115 73676 MILL RVR 115 1
     Set      bus 73651 generation to     150.0 MW    /  73651 NH HARBR22.0
 end
 Contingency 'GRNDAV3TSPS'
   Open branch from bus 73669 to bus 73676 ckt 1  /  73669 GRAND AV 115 73676 MILL RVR 115 1
   Open branch from bus 73668 to bus 73669 ckt 2  /  73668 E.SHORE  115 73669 GRAND AV 115 2
 end
 Contingency 'GRDAV3TSPSA'
   Open branch from bus 73669 to bus 73676 ckt 1  /  73669 GRAND AV 115 73676 MILL RVR 115 1
   Open branch from bus 73668 to bus 73669 ckt 2  /  73668 E.SHORE  115 73669 GRAND AV 115 2
     Set      bus 73651 generation to     0.0 MW    /  73651 NH HARBR22.0
 end
 Contingency 'GRDAV3TSPSB'
   Open branch from bus 73669 to bus 73676 ckt 1  /  73669 GRAND AV 115 73676 MILL RVR 115 1
   Open branch from bus 73668 to bus 73669 ckt 2  /  73668 E.SHORE  115 73669 GRAND AV 115 2
     Set      bus 73651 generation to     150.0 MW    /  73651 NH HARBR22.0
 end
 Contingency 'WRIVER1TSPS'
   Open branch from bus 73677 to bus 73680 ckt 1  /  73677 UNION AV 115 73680 WATER ST 115 1
   Open branch from bus 73669 to bus 73681 ckt 1  /  73669 GRAND AV 115 73681 WEST RIV 115 1
   Open branch from bus 73681 to bus 73682 ckt 1  /  73681 WEST RIV 115 73682 ELMWST A 115 1
   Open branch from bus 73682 to bus 73684 ckt 1  /  73682 ELMWST A 115 73684 ALLINGSA 115 1
 end
 Contingency 'WRVER1TSPSA'
   Open branch from bus 73677 to bus 73680 ckt 1  /  73677 UNION AV 115 73680 WATER ST 115 1
```

This document may contain Critical Energy Infrastructure Information -Do Not Release

```
  Open branch from bus 73669 to bus 73681 ckt 1  /  73669 GRAND AV 115 73681 WEST RIV 115 1
  Open branch from bus 73681 to bus 73682 ckt 1  /  73681 WEST RIV 115 73682 ELMWST A 115 1
  Open branch from bus 73682 to bus 73684 ckt 1  /  73682 ELMWST A 115 73684 ALLINGSA 115 1
   Set      bus 73651 generation to     0.0 MW    /  73651 NH HARBR22.0
end
Contingency 'WRVER1TSPSB'
  Open branch from bus 73677 to bus 73680 ckt 1  /  73677 UNION AV 115 73680 WATER ST 115 1
  Open branch from bus 73669 to bus 73681 ckt 1  /  73669 GRAND AV 115 73681 WEST RIV 115 1
  Open branch from bus 73681 to bus 73682 ckt 1  /  73681 WEST RIV 115 73682 ELMWST A 115 1
  Open branch from bus 73682 to bus 73684 ckt 1  /  73682 ELMWST A 115 73684 ALLINGSA 115 1
   Set      bus 73651 generation to     150.0 MW    /  73651 NH HARBR22.0
end
Contingency 'WRIVER2TSPS'
  Open branch from bus 73677 to bus 73680 ckt 1  /  73677 UNION AV 115 73680 WATER ST 115 1
  Open branch from bus 73669 to bus 73681 ckt 2  /  73669 GRAND AV 115 73681 WEST RIV 115 2
  Open branch from bus 73681 to bus 73683 ckt 1  /  73681 WEST RIV 115 73683 ELMWST B 115 1
  Open branch from bus 73683 to bus 73685 ckt 1  /  73683 ELMWST B 115 73685 ALLINGSB 115 1
end
Contingency 'WRVER2TSPSA'
  Open branch from bus 73677 to bus 73680 ckt 1  /  73677 UNION AV 115 73680 WATER ST 115 1
  Open branch from bus 73669 to bus 73681 ckt 2  /  73669 GRAND AV 115 73681 WEST RIV 115 2
  Open branch from bus 73681 to bus 73683 ckt 1  /  73681 WEST RIV 115 73683 ELMWST B 115 1
  Open branch from bus 73683 to bus 73685 ckt 1  /  73683 ELMWST B 115 73685 ALLINGSB 115 1
   Set      bus 73651 generation to     0.0 MW    /  73651 NH HARBR22.0
end
Contingency 'WRVER2TSPSB'
  Open branch from bus 73677 to bus 73680 ckt 1  /  73677 UNION AV 115 73680 WATER ST 115 1
  Open branch from bus 73669 to bus 73681 ckt 2  /  73669 GRAND AV 115 73681 WEST RIV 115 2
  Open branch from bus 73681 to bus 73683 ckt 1  /  73681 WEST RIV 115 73683 ELMWST B 115 1
  Open branch from bus 73683 to bus 73685 ckt 1  /  73683 ELMWST B 115 73685 ALLINGSB 115 1
   Set      bus 73651 generation to     150.0 MW    /  73651 NH HARBR22.0
end
Contingency '100LINE'
  Open branch from bus 73343 to bus 73344 ckt 1  /  73343 GALESF A69.0 73344 MONTVLLE69.0 1
end
Contingency '100+400LINES'
  Open branch from bus 73343 to bus 73344 ckt 1  /  73343 GALESF A69.0 73344 MONTVLLE69.0 1
  Open branch from bus 73343 to bus 73345 ckt 1  /  73343 GALESF A69.0 73345 LEDYARDJ69.0 1
  Open branch from bus 73345 to bus 73615 ckt 1  /  73345 LEDYARDJ69.0 73615 BUDDGTN 69.0 1
  Open branch from bus 73345 to bus 73617 ckt 1  /  73345 LEDYARDJ69.0 73617 TUNNEL  69.0 1
end
Contingency '400LINE'
  Open branch from bus 73343 to bus 73345 ckt 1  /  73343 GALESF A69.0 73345 LEDYARDJ69.0 1
  Open branch from bus 73345 to bus 73615 ckt 1  /  73345 LEDYARDJ69.0 73615 BUDDGTN 69.0 1
  Open branch from bus 73345 to bus 73617 ckt 1  /  73345 LEDYARDJ69.0 73617 TUNNEL  69.0 1
end
Contingency '500LINE'
  Open branch from bus 73616 to bus 73617 ckt 1  /  73616 SCRRA PF69.0 73617 TUNNEL  69.0 1
end
Contingency '667-690LINE'
  Open branch from bus 73336 to bus 73337 ckt 1  /  73336 FALLS V 69.0 73337 SALISBRY69.0 1
end
Contingency '689LINE'
  Open branch from bus 73336 to bus 73346 ckt 1  /  73336 FALLS V 69.0 73346 TORRGTN 69.0 1
end
Contingency '693LINE'
  Open branch from bus 73336 to bus 73346 ckt 2  /  73336 FALLS V 69.0 73346 TORRGTN 69.0 2
end
Contingency '694LINE'
  Open branch from bus 73335 to bus 73336 ckt 1  /  73335 N.CANAAN69.0 73336 FALLS V 69.0 1
end
Contingency '1000LINE'
  Open branch from bus 73210 to bus 73611 ckt 1  /  73210 MONTVLLE 115 73611 DUDLEY T 115 1
  Open branch from bus 73611 to bus 73612 ckt 1  /  73611 DUDLEY T 115 73612 BEAN HLL 115 1
end
Contingency '1050LINE'
  Open branch from bus 73241 to bus 73269 ckt 1  /  73241 MIDDLTWN 115 73269 DOOLEY   115 1
end
Contingency '1050+1766LNS'
  Open branch from bus 73241 to bus 73269 ckt 1  /  73241 MIDDLTWN 115 73269 DOOLEY   115 1
```

This document may contain Critical Energy Infrastructure Information -Do Not Release

```
  Open branch from bus 73255 to bus 73269 ckt 1  /  73255 WESTSIDE 115 73269 DOOLEY   115 1
end
Contingency '1060LINE'
  Open branch from bus 73170 to bus 73176 ckt 1  /  73170 PLUMTREE 115 73176 TRIANGLE 115 1
  Open branch from bus 73176 to bus 73377 ckt 1  /  73176 TRIANGLE 115 73377 TRIANGLA13.8 1
end
Contingency '1070LINE'
  Open branch from bus 73218 to bus 73291 ckt 1  /  73218 STKHOUSE 115 73291 FORTHF   115 1
end
Contingency '1070+1490LNS'
  Open branch from bus 73218 to bus 73291 ckt 1  /  73218 STKHOUSE 115 73291 FORTHF   115 1
  Open branch from bus 73215 to bus 73218 ckt 1  /  73215 CARD     115 73218 STKHOUSE 115 1
end
Contingency '1080LINE'
  Open branch from bus 73214 to bus 73215 ckt 1  /  73214 WAWECS J 115 73215 CARD     115 1
  Open branch from bus 73210 to bus 73214 ckt 1  /  73210 MONTVLLE 115 73214 WAWECS J 115 1
  Open branch from bus 73214 to bus 73276 ckt 1  /  73214 WAWECS J 115 73276 LISBN PF 115 1
  Open branch from bus 73213 to bus 73276 ckt 1  /  73213 TUNNEL   115 73276 LISBN PF 115 1
end
Contingency '1090LINE'
  Open branch from bus 73210 to bus 73291 ckt 1  /  73210 MONTVLLE 115 73291 FORTHF   115 1
end
Contingency '1100LINE'
  Open branch from bus 73219 to bus 73220 ckt 1  /  73219 BARBR HL 115 73220 ENFIELD  115 1
end
Contingency '1130LINE'
  Open branch from bus 73700 to bus 73286 ckt 1  /  73700 PEQUONIC 115 73286 COMPO    115 1
end
Contingency '1130+1416LNS'
  Open branch from bus 73700 to bus 73286 ckt 1  /  73700 PEQUONIC 115 73286 COMPO    115 1
  Open branch from bus 73267 to bus 73300 ckt 1  /  73267 DARIEN   115 73300 ELYTAP   115 1
  Open branch from bus 73286 to bus 73300 ckt 1  /  73286 COMPO    115 73300 ELYTAP   115 1
end
Contingency '1163LINE'
  Open branch from bus 73204 to bus 73205 ckt 1  /  73204 TODD     115 73205 NOERA JB 115 1
  Open branch from bus 73202 to bus 73205 ckt 1  /  73202 FROST BR 115 73205 NOERA JB 115 1
  Open branch from bus 73201 to bus 73205 ckt 1  /  73201 NOERA    115 73205 NOERA JB 115 1
end
Contingency '1163+1910LNS'
  Open branch from bus 73127 to bus 73154 ckt 2  /  73127 SGTNB RX 115 73154 SGTN B   115 2
  Open branch from bus 73127 to bus 73204 ckt 1  /  73127 SGTNB RX 115 73204 TODD     115 1
  Open branch from bus 73204 to bus 73205 ckt 1  /  73204 TODD     115 73205 NOERA JB 115 1
  Open branch from bus 73202 to bus 73205 ckt 1  /  73202 FROST BR 115 73205 NOERA JB 115 1
  Open branch from bus 73201 to bus 73205 ckt 1  /  73201 NOERA    115 73205 NOERA JB 115 1
end
Contingency '1165LINE'
  Open branch from bus 73170 to bus 73176 ckt 2  /  73170 PLUMTREE 115 73176 TRIANGLE 115 2
  Open branch from bus 73176 to bus 73383 ckt 1  /  73176 TRIANGLE 115 73383 TRIANGLB13.8 1
end
Contingency '1191LINE'
  Open branch from bus 73202 to bus 73203 ckt 1  /  73202 FROST BR 115 73203 CAMPV PH 115 1
end
Contingency '1200LINE'
  Open branch from bus 73219 to bus 73222 ckt 1  /  73219 BARBR HL 115 73222 WNDSRLK  115 1
end
Contingency '1206LINE'
  Open branch from bus 72612 to bus 73230 ckt 1  /  72612 CTYANK J 115 73230 HADDAM   115 1
  Open branch from bus 72612 to bus 73249 ckt 1  /  72612 CTYANK J 115 73249 P+W MIDD 115 1
  Open branch from bus 72612 to bus 73600 ckt 1  /  72612 CTYANK J 115 73600 CONN YAN 115 1
end
Contingency '1207LINE'
  Open branch from bus 73242 to bus 73250 ckt 1  /  73242 MANCHSTR 115 73250 E.HTFD   115 1
end
Contingency '1208LINE'
  Open branch from bus 73198 to bus 73631 ckt 1  /  73198 SOUTHGTN 115 73631 WLNGFD   115 1
end
Contingency '1222LINE'
  Open branch from bus 73709 to bus 73711 ckt 1  /  73709 OLD TOWN 115 73711 HAWTH R  115 1
  Open branch from bus 73710 to bus 73711 ckt 2  /  73710 HAWTHORN 115 73711 HAWTH R  115 2
end
```

This document may contain Critical Energy Infrastructure Information -Do Not Release

```
Contingency '1235LINE'
  Open branch from bus 73151 to bus 73210 ckt 1  /  73151 UNCASVLA 115 73210 MONTVLLE 115 1
end
Contingency '1238LINE'
  Open branch from bus 73180 to bus 73202 ckt 1  /  73180 CARMHILL 115 73202 FROST BR 115 1
end
Contingency '1238+1813LNS'
  Open branch from bus 73180 to bus 73202 ckt 1  /  73180 CARMHILL 115 73202 FROST BR 115 1
  Open branch from bus 73180 to bus 73190 ckt 1  /  73180 CARMHILL 115 73190 ROCK RIV 115 1
end
Contingency '1250LINE'
  Open branch from bus 73152 to bus 73210 ckt 1  /  73152 UNCASVLB 115 73210 MONTVLLE 115 1
end
Contingency '1261LINE'
  Open branch from bus 73230 to bus 73231 ckt 1  /  73230 HADDAM   115 73231 BOKUM    115 1
  Open branch from bus 73231 to bus 73423 ckt 1  /  73231 BOKUM    115 73423 BOKUM   27.6 1
end
Contingency '1272LINE'
  Open branch from bus 73183 to bus 73185 ckt 1  /  73183 SHAWSHIL 115 73185 BUNKER H 115 1
end
Contingency '1272+1445LNS'
  Open branch from bus 73183 to bus 73185 ckt 1  /  73183 SHAWSHIL 115 73185 BUNKER H 115 1
  Open branch from bus 73183 to bus 73202 ckt 1  /  73183 SHAWSHIL 115 73202 FROST BR 115 1
end
Contingency '1280LINE'
  Open branch from bus 73216 to bus 73217 ckt 1  /  73216 WHIP JCT 115 73217 BUDDGTN  115 1
  Open branch from bus 73177 to bus 73216 ckt 1  /  73177 MYSTICCT 115 73216 WHIP JCT 115 1
  Open branch from bus 73210 to bus 73216 ckt 1  /  73210 MONTVLLE 115 73216 WHIP JCT 115 1
end
Contingency '1300LINE'
  Open branch from bus 73220 to bus 73222 ckt 1  /  73220 ENFIELD  115 73222 WNDSRLK  115 1
  Open branch from bus 73222 to bus 73539 ckt 1  /  73222 WNDSRLK  115 73539 DEXTR PF13.8 1
end
Contingency '1310LINE'
  Open branch from bus 73221 to bus 73242 ckt 1  /  73221 SO.WNDSR 115 73242 MANCHSTR 115 1
end
Contingency '1337LINE'
  Open branch from bus 73176 to bus 73268 ckt 1  /  73176 TRIANGLE 115 73268 MIDDLRIV 115 1
  Open branch from bus 73176 to bus 73377 ckt 2  /  73176 TRIANGLE 115 73377 TRIANGLA13.8 2
end
Contingency '1342LINE'
  Open branch from bus 73231 to bus 73265 ckt 1  /  73231 BOKUM    115 73265 GREEN HL 115 1
end
Contingency '1355LINE'
  Open branch from bus 73184 to bus 73634 ckt 1  /  73184 LUCHJB55 115 73634 COLONY   115 1
  Open branch from bus 73182 to bus 73184 ckt 1  /  73182 HANOVERB 115 73184 LUCHJB55 115 1
  Open branch from bus 73184 to bus 73198 ckt 1  /  73184 LUCHJB55 115 73198 SOUTHGTN 115 1
end
Contingency 'ONE1385'
  Open branch from bus 75053 to bus 73166 ckt 1  /  75053 NRTHPT P 138 73166 NORHR138 138 1
end
Contingency 'TWO1385'
  Open branch from bus 75053 to bus 73166 ckt 1  /  75053 NRTHPT P 138 73166 NORHR138 138 1
  Open branch from bus 75053 to bus 73166 ckt 2  /  75053 NRTHPT P 138 73166 NORHR138 138 2
end
Contingency 'THREE1385'
  Open branch from bus 75053 to bus 73166 ckt 1  /  75053 NRTHPT P 138 73166 NORHR138 138 1
  Open branch from bus 75053 to bus 73166 ckt 2  /  75053 NRTHPT P 138 73166 NORHR138 138 2
  Open branch from bus 75053 to bus 73166 ckt 3  /  75053 NRTHPT P 138 73166 NORHR138 138 3
  Open branch from bus 73166 to bus 73171 ckt 1  /  73166 NORHR138 138 73171 NWLK HAR 115 1
end
Contingency '1389LINE'
  Open branch from bus 73172 to bus 73207 ckt 1  /  73172 NORWALK  115 73207 FLAX HIL 115 1
end
Contingency '1394LINE'
  Open branch from bus 72978 to bus 73266 ckt 1  /  72978 FRANCONA 115 73266 SCITICO  115 1
end
Contingency '1410LINE'
  Open branch from bus 73210 to bus 73613 ckt 1  /  73210 MONTVLLE 115 73613 BUDDGTN2 115 1
end
```

This document may contain Critical Energy Infrastructure Information -Do Not Release

```
Contingency '1416LINE'
  Open branch from bus 73267 to bus 73300 ckt 1  /  73267 DARIEN   115 73300 ELYTAP   115 1
  Open branch from bus 73286 to bus 73300 ckt 1  /  73286 COMPO    115 73300 ELYTAP   115 1
end
Contingency '1430LINE'
  Open branch from bus 73714 to bus 73173 ckt 1  /  73714 ASHCREAC 115 73173 SASCO CR 115 1
  Open branch from bus 73703 to bus 73714 ckt 1  /  73703 ASHCREEK 115 73714 ASHCREAC 115 1
end
Contingency '1440LINE'
  Open branch from bus 73162 to bus 73168 ckt 1  /  73162 WATERSDE 115 73168 GLNBROOK 115 1
end
Contingency '1443LINE'
  Open branch from bus 73241 to bus 73264 ckt 1  /  73241 MIDDLTWN 115 73264 PORTLAND 115 1
end
Contingency '1443+1759LNS'
  Open branch from bus 73241 to bus 73264 ckt 1  /  73241 MIDDLTWN 115 73264 PORTLAND 115 1
  Open branch from bus 73259 to bus 73264 ckt 1  /  73259 HOPEWELL 115 73264 PORTLAND 115 1
end
Contingency '1445LINE'
  Open branch from bus 73183 to bus 73202 ckt 1  /  73183 SHAWSHIL 115 73202 FROST BR 115 1
end
Contingency '1450LINE'
  Open branch from bus 73167 to bus 73168 ckt 1  /  73167 SO.END   115 73168 GLNBROOK 115 1
end
Contingency '1460LINE'
  Open branch from bus 73668 to bus 73287 ckt 1  /  73668 E.SHORE  115 73287 BRANF RR 115 1
end
Contingency '1466LINE'
  Open branch from bus 73227 to bus 73633 ckt 1  /  73227 E.MERIDN 115 73633 NO.WALLF 115 1
end
Contingency '1470LINE'
  Open branch from bus 73296 to bus 73354 ckt 1  /  73296 WLTON115 115 73354 WLTON13813.8 1
  Open branch from bus 73296 to bus 73139 ckt 1  /  73296 WLTON115 115 73139 PT3260   115 1
  Open branch from bus 73174 to bus 73139 ckt 1  /  73174 PEACEABL 115 73139 PT3260   115 1
  Open branch from bus 73143 to bus 73174 ckt 1  /  73143 RDGEFLDA 115 73174 PEACEABL 115 1
  Open branch from bus 73143 to bus 73372 ckt 1  /  73143 RDGEFLDA 115 73372 RDGEFLD 13.8 1
end
Contingency '1490LINE'
  Open branch from bus 73215 to bus 73218 ckt 1  /  73215 CARD     115 73218 STKHOUSE 115 1
end
Contingency '1500LINE'
  Open branch from bus 73150 to bus 73156 ckt 1  /  73150 FLNDRSA  115 73156 COHNZ JA 115 1
  Open branch from bus 73149 to bus 73156 ckt 1  /  73149 WILIAMSA 115 73156 COHNZ JA 115 1
  Open branch from bus 73156 to bus 73210 ckt 1  /  73156 COHNZ JA 115 73210 MONTVLLE 115 1
end
Contingency '1505Line'
  Open branch from bus 73213 to bus 73223 ckt 1  /  73213 TUNNEL   115 73223 FRYBRT05 115 1
  Open branch from bus 73223 to bus 73236 ckt 1  /  73223 FRYBRT05 115 73236 FRYBR05  115 1
  Open branch from bus 73236 to bus 73443 ckt 1  /  73236 FRYBR05  115 73443 FRY BRK 23.0 1
  Open branch from bus 73223 to bus 73270 ckt 1  /  73223 FRYBRT05 115 73270 BROOKLYN 115 1
  Open branch from bus 73270 to bus 73304 ckt 1  /  73270 BROOKLYN 115 73304 KILLINGL 115 1
  Open branch from bus 73270 to bus 73444 ckt 1  /  73270 BROOKLYN 115 73444 BROOKLYN23.0 1
end
/ Contingency '1508LINE'    REPLACED BY 1508W AND 1508E AS PER INSTRUCTIONS FROM ISO
/    Open branch from bus 73153 to bus 73334 ckt 1  /  73153 BRANFORD 115 73334 STEPSTNE 115 1
/ end
Contingency '1508E'
  Open branch from bus 73265 to bus 73334 ckt 1
  Open branch from bus 73265 to bus 73404 ckt 1
end
Contingency '1508W'
  Disconnect bus 73334
  Open branch from bus 73153 to bus 73403 ckt 1
end
Contingency '1515LINE'
  Open branch from bus 72972 to bus 73266 ckt 1  /  72972 LUDLOW   115 73266 SCITICO  115 1
end
Contingency '1537LINE'
  Open branch from bus 73153 to bus 73287 ckt 1  /  73153 BRANFORD 115 73287 BRANF RR 115 1
end
```

This document may contain Critical Energy Infrastructure Information -Do Not Release

```
Contingency '1545+SPS'
   Open branch from bus 73704 to bus 73126 ckt 1  /  73704 TRAP FLS 115 73126 DEVON#2  115 1
   Open branch from bus 73705 to bus 73706 ckt 1  /  73705 IND.WELL 115 73706 ANSONIA  115 1
end
Contingency '1550LINE'
   Open branch from bus 73200 to bus 73211 ckt 1  /  73200 NOERA JA 115 73211 CANAL    115 1
   Open branch from bus 73181 to bus 73200 ckt 1  /  73181 NOERA    115 73200 NOERA JA 115 1
   Open branch from bus 73200 to bus 73202 ckt 1  /  73200 NOERA JA 115 73202 FROST BR 115 1
end
Contingency '1550+1950LNS'
   Open branch from bus 73128 to bus 73154 ckt 2  /  73128 SGTNB2 R 115 73154 SGTN B   115 2
   Open branch from bus 73128 to bus 73211 ckt 1  /  73128 SGTNB2 R 115 73211 CANAL    115 1
   Open branch from bus 73200 to bus 73211 ckt 1  /  73200 NOERA JA 115 73211 CANAL    115 1
   Open branch from bus 73181 to bus 73200 ckt 1  /  73181 NOERA    115 73200 NOERA JA 115 1
   Open branch from bus 73200 to bus 73202 ckt 1  /  73200 NOERA JA 115 73202 FROST BR 115 1
end
Contingency '1560LINE'
   Open branch from bus 73704 to bus 73191 ckt 1  /  73704 TRAP FLS 115 73191 DRBY J A 115 1
   Open branch from bus 73187 to bus 73191 ckt 1  /  73187 STEVENSN 115 73191 DRBY J A 115 1
   Open branch from bus 73706 to bus 73191 ckt 1  /  73706 ANSONIA  115 73191 DRBY J A 115 1
end
Contingency '1565LINE'
   Open branch from bus 73155 to bus 73174 ckt 1  /  73155 RDGFLD J 115 73174 PEACEABL 115 1
   Open branch from bus 73155 to bus 73170 ckt 1  /  73155 RDGFLD J 115 73170 PLUMTREE 115 1
   Open branch from bus 73146 to bus 73155 ckt 1  /  73146 RDGEFLDB 115 73155 RDGFLD J 115 1
   Open branch from bus 73146 to bus 73372 ckt 1  /  73146 RDGEFLDB 115 73372 RDGEFLD 13.8 1
end
Contingency '1570LINE'
   Open branch from bus 73126 to bus 73192 ckt 1  /  73126 DEVON#2  115 73192 DRBY J B 115 1
   Open branch from bus 73188 to bus 73192 ckt 1  /  73188 BCNFL PF 115 73192 DRBY J B 115 1
   Open branch from bus 73705 to bus 73192 ckt 1  /  73705 IND.WELL 115 73192 DRBY J B 115 1
end
Contingency '1572LINE'
   Open branch from bus 73241 to bus 73249 ckt 1  /  73241 MIDDLTWN 115 73249 P+W MIDD 115 1
end
Contingency '1572+1772LNS'
   Open branch from bus 73241 to bus 73249 ckt 1  /  73241 MIDDLTWN 115 73249 P+W MIDD 115 1
   Open branch from bus 72612 to bus 73230 ckt 1  /  72612 CTYANK J 115 73230 HADDAM   115 1
   Open branch from bus 72612 to bus 73249 ckt 1  /  72612 CTYANK J 115 73249 P+W MIDD 115 1
   Open branch from bus 72612 to bus 73600 ckt 1  /  72612 CTYANK J 115 73600 CONN YAN 115 1
end
/ Contingency '1575NLINE' -replaced by two contingencies below
/    Open branch from bus 73188 to bus 73228 ckt 1  /  73188 BCNFL PF 115 73228 BALDWNJB 115 1
/   Open branch from bus 73185 to bus 73228 ckt 1  /  73185 BUNKER H 115 73228 BALDWNJB 115 1
/    Open branch from bus 73160 to bus 73228 ckt 1  /  73160 BALDWINB 115 73228 BALDWNJB 115 1
/    Open branch from bus 73160 to bus 73382 ckt 1  /  73160 BALDWINB 115 73382 BALDWINB13.8 1
/ end
Contingency '1575-1_LINE'
   Open branch from bus 73188 to bus 73130 ckt 1  /
   Open branch from bus 73130 to bus 73136 ckt 1  /
end
Contingency '1575-2_LINE'
   Open branch from bus 73130 to bus 73228 ckt 1  /
   Open branch from bus 73130 to bus 73136 ckt 1  /
   Open branch from bus 73185 to bus 73228 ckt 1  /  73185 BUNKER H 115 73228 BALDWNJB 115 1
   Open branch from bus 73160 to bus 73228 ckt 1  /  73160 BALDWINB 115 73228 BALDWNJB 115 1
   Open branch from bus 73160 to bus 73382 ckt 1  /  73160 BALDWINB 115 73382 BALDWINB13.8 1
end
Contingency '1580LINE'
   Open branch from bus 73126 to bus 73199 ckt 1  /  73126 DEVON#2  115 73199 SO.NAUG  115 1
end
Contingency '1585LINE'
   Open branch from bus 73185 to bus 73199 ckt 1  /  73185 BUNKER H 115 73199 SO.NAUG  115 1
end
Contingency '1588LINE'
   Open branch from bus 73633 to bus 73634 ckt 1  /  73633 NO.WALLF 115 73634 COLONY   115 1
end
Contingency '1594LINE'
   Open branch from bus 73705 to bus 73706 ckt 1  /  73705 IND.WELL 115 73706 ANSONIA  115 1
end
```

This document may contain Critical Energy Infrastructure Information -Do Not Release

```
Contingency '1605LINE'
  Open branch from bus 73157 to bus 73238 ckt 1  /  73157 COHNZ JB 115 73238 FLANDRSB 115 1
  Open branch from bus 73157 to bus 73239 ckt 1  /  73157 COHNZ JB 115 73239 WILIAMSB 115 1
  Open branch from bus 73157 to bus 73210 ckt 1  /  73157 COHNZ JB 115 73210 MONTVLLE 115 1
end
Contingency '1607LINE'
  Open branch from bus 73213 to bus 73226 ckt 1  /  73213 TUNNEL   115 73226 FRYBRT07 115 1
  Open branch from bus 73226 to bus 73229 ckt 1  /  73226 FRYBRT07 115 73229 FRY BR07 115 1
  Open branch from bus 73226 to bus 73281 ckt 1  /  73226 FRYBRT07 115 73281 EXETR PF 115 1
  Open branch from bus 73281 to bus 73304 ckt 1  /  73281 EXETR PF 115 73304 KILLINGL 115 1
  Open branch from bus 73229 to bus 73443 ckt 1  /  73229 FRY BR07 115 73443 FRY BRK 23.0 1
end
Contingency '1610LINE'
  Open branch from bus 73707 to bus 73196 ckt 1  /  73707 JUNE ST  115 73196 GLEN JCT 115 1
  Open branch from bus 73675 to bus 73196 ckt 1  /  73675 MIX AVE  115 73196 GLEN JCT 115 1
  Open branch from bus 73196 to bus 73198 ckt 1  /  73196 GLEN JCT 115 73198 SOUTHGTN 115 1
end
Contingency '1618LINE'
  Open branch from bus 73179 to bus 73190 ckt 1  /  73179 W.BRKFLD 115 73190 ROCK RIV 115 1
end
Contingency '1620ALINE'
  Open branch from bus 73230 to bus 73231 ckt 2  /  73230 HADDAM   115 73231 BOKUM    115 2
end
Contingency '1620BLINE'
  Open branch from bus 73230 to bus 73241 ckt 1  /  73230 HADDAM   115 73241 MIDDLTWN 115 1
end
Contingency '1622LINE'
  Open branch from bus 73159 to bus 73178 ckt 1  /  73159 BATES RK 115 73178 SHEPAUG  115 1
  Open branch from bus 73178 to bus 73341 ckt 1  /  73178 SHEPAUG  115 73341 SHEPAUG 69.0 1
end
Contingency '1625LINE'
  Open branch from bus 73161 to bus 73219 ckt 1  /  73161 ROCKVILL 115 73219 BARBR HL 115 1
end
Contingency '1630LINE'
  Open branch from bus 73631 to bus 73632 ckt 1  /  73631 WLNGFD   115 73632 WALRC PF 115 1
  Open branch from bus 73671 to bus 73632 ckt 1  /  73671 NO.HAVEN 115 73632 WALRC PF 115 1
end
Contingency '1637LINE'
  Open branch from bus 73158 to bus 73292 ckt 1  /  73158 WESTON   115 73292 NRWLK RX 115 1
  Open branch from bus 73172 to bus 73292 ckt 2  /  73172 NORWALK  115 73292 NRWLK RX 115 2
end
Contingency '1640LINE'
  Open branch from bus 73195 to bus 73631 ckt 1  /  73195 DEVON    115 73631 WLNGFD   115 1
end
Contingency '1655LINE'
  Open branch from bus 73671 to bus 73153 ckt 1  /  73671 NO.HAVEN 115 73153 BRANFORD 115 1
end
Contingency '1668LINE'
  Open branch from bus 73185 to bus 73189 ckt 1  /  73185 BUNKER H 115 73189 FREIGHT  115 1
end
Contingency '1670LINE'
  Open branch from bus 73198 to bus 73206 ckt 1  /  73198 SOUTHGTN 115 73206 RES RD J 115 1
  Open branch from bus 73206 to bus 73243 ckt 1  /  73206 RES RD J 115 73243 BERLIN   115 1
  Open branch from bus 73206 to bus 73273 ckt 1  /  73206 RES RD J 115 73273 BLRKHIB  115 1
end
Contingency '1675LINE'
  Open branch from bus 73213 to bus 73612 ckt 1  /  73213 TUNNEL   115 73612 BEAN HLL 115 1
end
Contingency '1682LINE'
  Open branch from bus 73172 to bus 73296 ckt 1  /  73172 NORWALK  115 73296 WLTON115 115 1
  Open branch from bus 73296 to bus 73354 ckt 1  /  73296 WLTON115 115 73354 WLTON13813.8 1
end
Contingency '1685LINE'
  Open branch from bus 73707 to bus 73195 ckt 1  /  73707 JUNE ST  115 73195 DEVON    115 1
end
Contingency '1690LINE'
  Open branch from bus 73154 to bus 73193 ckt 1  /  73154 SGTN B   115 73193 LUCHJA90 115 1
  Open branch from bus 73193 to bus 73197 ckt 1  /  73193 LUCHJA90 115 73197 HANOVERA 115 1
end
Contingency '1704LINE'
```

This document may contain Critical Energy Infrastructure Information -Do Not Release

```
  Open branch from bus 73246 to bus 73248 ckt 1  /  73246 S.MEADOW 115 73248 SW.HTFD  115 1
end
Contingency '1710LINE'
  Open branch from bus 73225 to bus 73126 ckt 1  /  73225 TRMB1710 115 73126 DEVON#2  115 1
  Open branch from bus 73225 to bus 73700 ckt 1  /  73225 TRMB1710 115 73700 PEQUONIC 115 1
  Open branch from bus 73225 to bus 73709 ckt 1  /  73225 TRMB1710 115 73709 OLD TOWN 115 1
end
Contingency '1720LINE'
  Open branch from bus 73710 to bus 73172 ckt 1  /  73710 HAWTHORN 115 73172 NORWALK  115 1
end
Contingency '1721LINE'
  Open branch from bus 73189 to bus 73202 ckt 1  /  73189 FREIGHT  115 73202 FROST BR 115 1
end
Contingency '1722LINE'
  Open branch from bus 73248 to bus 73279 ckt 1  /  73248 SW.HTFD  115 73279 CDECCA   115 1
  Open branch from bus 73261 to bus 73279 ckt 1  /  73261 NW.HTFD  115 73279 CDECCA   115 1
end
Contingency '1726LINE'
  Open branch from bus 73244 to bus 73247 ckt 1  /  73244 N.BLMFLD 115 73247 FARMNGTN 115 1
end
Contingency '1730LINE'
  Open branch from bus 73224 to bus 73126 ckt 1  /  73224 TRMB1730 115 73126 DEVON#2  115 1
end
Contingency '1732LINE'
  Open branch from bus 73262 to bus 73263 ckt 1  /  73262 CANTON   115 73263 WEINGART 115 1
  Open branch from bus 73260 to bus 73263 ckt 1  /  73260 FRKLN DR 115 73263 WEINGART 115 1
  Open branch from bus 73203 to bus 73263 ckt 1  /  73203 CAMPV PH 115 73263 WEINGART 115 1
end
Contingency '1740LINE'
  Open branch from bus 73162 to bus 73163 ckt 1  /  73162 WATERSDE 115 73163 COS COB  115 1
end
Contingency '1750LINE'
  Open branch from bus 73144 to bus 73167 ckt 1  /  73144 TOMAC    115 73167 SO.END   115 1
  Open branch from bus 73144 to bus 73163 ckt 1  /  73144 TOMAC    115 73163 COS COB  115 1
end
Contingency '1751LINE'
  Open branch from bus 73244 to bus 73251 ckt 1  /  73244 N.BLMFLD 115 73251 BLM JCT  115 1
  Open branch from bus 73251 to bus 73261 ckt 1  /  73251 BLM JCT  115 73261 NW.HTFD  115 1
  Open branch from bus 73242 to bus 73251 ckt 1  /  73242 MANCHSTR 115 73251 BLM JCT  115 1
end
Contingency '1752LINE'
  Open branch from bus 73243 to bus 73257 ckt 1  /  73243 BERLIN   115 73257 ROCKY HL 115 1
end
Contingency '1753LINE'
  Open branch from bus 73145 to bus 73168 ckt 1  /  73145 CDR HGTS 115 73168 GLNBROOK 115 1
end
Contingency '1756LINE'
  Open branch from bus 73258 to bus 73261 ckt 1  /  73258 BLOOMFLD 115 73261 NW.HTFD  115 1
end
Contingency '1759LINE'
  Open branch from bus 73259 to bus 73264 ckt 1  /  73259 HOPEWELL 115 73264 PORTLAND 115 1
end
Contingency '1760LINE'
  Open branch from bus 73170 to bus 73194 ckt 1  /  73170 PLUMTREE 115 73194 NEWTOWN  115 1
end
Contingency '1760+1876LNS'
  Open branch from bus 73187 to bus 73282 ckt 1  /  73187 STEVENSN 115 73282 SNDYHK   115 1
  Open branch from bus 73194 to bus 73282 ckt 1  /  73194 NEWTOWN  115 73282 SNDYHK   115 1
  Open branch from bus 73170 to bus 73194 ckt 1  /  73170 PLUMTREE 115 73194 NEWTOWN  115 1
end
Contingency '1763LINE'
  Open branch from bus 73219 to bus 73242 ckt 1  /  73219 BARBR HL 115 73242 MANCHSTR 115 1
end
Contingency '1765LINE'
  Open branch from bus 73243 to bus 73255 ckt 1  /  73243 BERLIN   115 73255 WESTSIDE 115 1
end
Contingency '1766LINE'
  Open branch from bus 73255 to bus 73269 ckt 1  /  73255 WESTSIDE 115 73269 DOOLEY   115 1
end
Contingency '1767LINE'
```

This document may contain Critical Energy Infrastructure Information -Do Not Release

```
  Open branch from bus 73242 to bus 73259 ckt 1  /  73242 MANCHSTR 115 73259 HOPEWELL 115 1
end
Contingency '1769LINE'
  Open branch from bus 73243 to bus 73256 ckt 1  /  73243 BERLIN   115 73256 E.NBRITN 115 1
end
Contingency '1770LINE'
  Open branch from bus 73165 to bus 73170 ckt 1  /  73165 STONY HL 115 73170 PLUMTREE 115 1
  Open branch from bus 73159 to bus 73165 ckt 1  /  73159 BATES RK 115 73165 STONY HL 115 1
end
Contingency '1771LINE'
  Open branch from bus 73198 to bus 73243 ckt 1  /  73198 SOUTHGTN 115 73243 BERLIN   115 1
end
Contingency '1772LINE'
  Open branch from bus 72612 to bus 73249 ckt 1  /  72612 CTYANK J 115 73249 P+W MIDD 115 1
end
Contingency '1773LINE'
  Open branch from bus 73246 to bus 73257 ckt 1  /  73246 S.MEADOW 115 73257 ROCKY HL 115 1
end
Contingency '1775LINE'
  Open branch from bus 73246 to bus 73253 ckt 1  /  73246 S.MEADOW 115 73253 1775 TAP 115 1
  Open branch from bus 73253 to bus 73274 ckt 1  /  73253 1775 TAP 115 73274 RIVDRHIA 115 1
  Open branch from bus 73242 to bus 73253 ckt 1  /  73242 MANCHSTR 115 73253 1775 TAP 115 1
  Open branch from bus 73274 to bus 73537 ckt 1  /  73274 RIVDRHIA 115 73537 RVRSD PF23.0 1
end
Contingency '1777LINE'
  Open branch from bus 73244 to bus 73258 ckt 1  /  73244 N.BLMFLD 115 73258 BLOOMFLD 115 1
end
Contingency '1779LINE'
  Open branch from bus 73246 to bus 73258 ckt 1  /  73246 S.MEADOW 115 73258 BLOOMFLD 115 1
end
Contingency '1780LINE'
  Open branch from bus 73690 to bus 73195 ckt 1  /  73690 DEVON178 115 73195 DEVON    115 1
end
Contingency '1783LINE'
  Open branch from bus 73247 to bus 73254 ckt 1  /  73247 FARMNGTN 115 73254 NEWINGTN 115 1
  Open branch from bus 73254 to bus 73256 ckt 1  /  73254 NEWINGTN 115 73256 E.NBRITN 115 1
end
Contingency '1784LINE'
  Open branch from bus 73244 to bus 73288 ckt 1  /  73244 N.BLMFLD 115 73288 NESMBY   115 1
  Open branch from bus 73262 to bus 73288 ckt 1  /  73262 CANTON   115 73288 NESMBY   115 1
end
Contingency '1785LINE'
  Open branch from bus 73243 to bus 73254 ckt 1  /  73243 BERLIN   115 73254 NEWINGTN 115 1
end
Contingency '1786LINE'
  Open branch from bus 73246 to bus 73252 ckt 1  /  73246 S.MEADOW 115 73252 1786 TAP 115 1
  Open branch from bus 73252 to bus 73275 ckt 1  /  73252 1786 TAP 115 73275 RIVDRHIB 115 1
  Open branch from bus 73250 to bus 73252 ckt 1  /  73250 E.HTFD   115 73252 1786 TAP 115 1
end
Contingency '1788LINE'
  Open branch from bus 73245 to bus 73260 ckt 1  /  73245 TORR TER 115 73260 FRKLN DR 115 1
end
Contingency '1790LINE'
  Open branch from bus 73691 to bus 73195 ckt 1  /  73691 DEVON179 115 73195 DEVON    115 1
end
Contingency '1792LINE'
  Open branch from bus 73145 to bus 73168 ckt 2  /  73145 CDR HGTS 115 73168 GLNBROOK 115 2
end
Contingency '1800-1860LNS'
  Open branch from bus 73154 to bus 73208 ckt 1  /  73154 SGTN B   115 73208 U.A.C.TP 115 1
  Open branch from bus 73148 to bus 73208 ckt 1  /  73148 U.A.C.   115 73208 U.A.C.TP 115 1
  Open branch from bus 73208 to bus 73232 ckt 1  /  73208 U.A.C.TP 115 73232 FORESTVL 115 1
end
Contingency '1810LINE'
  Open branch from bus 73233 to bus 73234 ckt 1  /  73233 BRISTOL  115 73234 CHIPP TP 115 1
  Open branch from bus 73234 to bus 73235 ckt 1  /  73234 CHIPP TP 115 73235 CHIP HIL 115 1
  Open branch from bus 73154 to bus 73234 ckt 1  /  73154 SGTN B   115 73234 CHIPP TP 115 1
end
Contingency '1813LINE'
  Open branch from bus 73180 to bus 73190 ckt 1  /  73180 CARMHILL 115 73190 ROCK RIV 115 1
```

This document may contain Critical Energy Infrastructure Information -Do Not Release

```
end
Contingency '1820LINE'
  Open branch from bus 73154 to bus 73175 ckt 1  /  73154 SGTN B   115 73175 BLACK RK 115 1
end
Contingency '1821LINE'
  Open branch from bus 72991 to bus 73244 ckt 1  /  72991 SAGAR    115 73244 N.BLMFLD 115 1
end
Contingency '1825LINE'
  Open branch from bus 73232 to bus 73233 ckt 1  /  73232 FORESTVL 115 73233 BRISTOL  115 1
end
Contingency '1830LINE'
  Open branch from bus 73198 to bus 73272 ckt 1  /  73198 SOUTHGTN 115 73272 BLRKHIA  115 1
end
Contingency '1835LINE'
  Open branch from bus 73235 to bus 73240 ckt 1  /  73235 CHIP HIL 115 73240 THOMASTN 115 1
end
Contingency '1836LINE'
  Open branch from bus 72992 to bus 73244 ckt 1  /  72992 SAGBR    115 73244 N.BLMFLD 115 1
end
Contingency '1867LINE'
  Open branch from bus 73171 to bus 73271 ckt 1  /  73171 NWLK HAR 115 73271 RYTN J B 115 1
  Open branch from bus 73168 to bus 73271 ckt 1  /  73168 GLNBROOK 115 73271 RYTN J B 115 1
  Open branch from bus 73207 to bus 73271 ckt 1  /  73207 FLAX HIL 115 73271 RYTN J B 115 1
end
Contingency '1870LINE'
  Open branch from bus 73285 to bus 73303 ckt 1  /  73285 CTRI1870 115 73303 SHUNOCK  115 1
  Open branch from bus 73285 to bus 72581 ckt 1  /  73285 CTRI1870 115 72581 WOOD RIV 115 1
end
Contingency '1876LINE'
  Open branch from bus 73187 to bus 73282 ckt 1  /  73187 STEVENSN 115 73282 SNDYHK   115 1
  Open branch from bus 73194 to bus 73282 ckt 1  /  73194 NEWTOWN  115 73282 SNDYHK   115 1
end
Contingency '1880LINE'
  Open branch from bus 73169 to bus 73172 ckt 1  /  73169 RYTN J A 115 73172 NORWALK  115 1
  Open branch from bus 73168 to bus 73169 ckt 1  /  73168 GLNBROOK 115 73169 RYTN J A 115 1
  Open branch from bus 73169 to bus 73171 ckt 1  /  73169 RYTN J A 115 73171 NWLK HAR 115 1
end
Contingency '1887LINE'
  Open branch from bus 73165 to bus 73179 ckt 1  /  73165 STONY HL 115 73179 W.BRKFLD 115 1
  Open branch from bus 73165 to bus 73178 ckt 1  /  73165 STONY HL 115 73178 SHEPAUG  115 1
end
Contingency '1890LINE'
  Open branch from bus 73171 to bus 73237 ckt 1  /  73171 NWLK HAR 115 73237 ELYAVE   115 1
  Open branch from bus 73168 to bus 73237 ckt 1  /  73168 GLNBROOK 115 73237 ELYAVE   115 1
  Open branch from bus 73173 to bus 73237 ckt 1  /  73173 SASCO CR 115 73237 ELYAVE   115 1
end
Contingency '1900LINE'
  Open branch from bus 73203 to bus 73245 ckt 1  /  73203 CAMPV PH 115 73245 TORR TER 115 1
end
Contingency '1910LINE'
  Open branch from bus 73127 to bus 73154 ckt 2  /  73127 SGTNB RX 115 73154 SGTN B   115 2
  Open branch from bus 73127 to bus 73204 ckt 1  /  73127 SGTNB RX 115 73204 TODD     115 1
end
Contingency '1921LINE'
  Open branch from bus 73203 to bus 73240 ckt 1  /  73203 CAMPV PH 115 73240 THOMASTN 115 1
end
Contingency '1950LINE'
  Open branch from bus 73128 to bus 73154 ckt 2  /  73128 SGTNB2 R 115 73154 SGTN B   115 2
  Open branch from bus 73128 to bus 73211 ckt 1  /  73128 SGTNB2 R 115 73211 CANAL    115 1
end
Contingency '1975LINE'
  Open branch from bus 73227 to bus 73230 ckt 1  /  73227 E.MERIDN 115 73230 HADDAM   115 1
end
Contingency '1977LINENEW'
  Open branch from bus 73267 to bus 73294 ckt 1  /  73267 DARIEN   115 73294 GLNBRK J 115 1
  Open branch from bus 73167 to bus 73294 ckt 1  /  73167 SO.END   115 73294 GLNBRK J 115 1
  Open branch from bus 73168 to bus 73294 ckt 1  /  73168 GLNBROOK 115 73294 GLNBRK J 115 1
end
Contingency '1990LINE'
  Open branch from bus 73164 to bus 73202 ckt 1  /  73164 BALDWNJA 115 73202 FROST BR 115 1
```

This document may contain Critical Energy Infrastructure Information -Do Not Release

```
  Open branch from bus 73164 to bus 73186 ckt 1  /  73164 BALDWNJA 115 73186 BALDWINA 115 1
  Open branch from bus 73164 to bus 73333 ckt 1  /  73164 BALDWNJA 115 73333 JACKSHL  115 1
  Open branch from bus 73186 to bus 73386 ckt 1  /  73186 BALDWINA 115 73386 BALDWINA13.8 1
end
Contingency '8100LINE'
  Open branch from bus 73669 to bus 73679 ckt 1  /  73669 GRAND AV 115 73679 ENG STA  115 1
  Open branch from bus 73668 to bus 73679 ckt 1  /  73668 E.SHORE  115 73679 ENG STA  115 1
end
Contingency '8200LINE'
  Open branch from bus 73668 to bus 73669 ckt 2  /  73668 E.SHORE  115 73669 GRAND AV 115 2
end
Contingency '8300LINE'
  Open branch from bus 73670 to bus 73676 ckt 1  /  73670 QUINNIP  115 73676 MILL RVR 115 1
end
Contingency '8400LINE'
  Open branch from bus 73669 to bus 73672 ckt 1  /  73669 GRAND AV 115 73672 SACKETT  115 1
end
Contingency '8500LINE'
  Open branch from bus 73669 to bus 73680 ckt 1  /  73669 GRAND AV 115 73680 WATER ST 115 1
end
Contingency '8600LINE'
  Open branch from bus 73670 to bus 73671 ckt 1  /  73670 QUINNIP  115 73671 NO.HAVEN 115 1
end
Contingency '8700LINE'
  Open branch from bus 73677 to bus 73680 ckt 1  /  73677 UNION AV 115 73680 WATER ST 115 1
end
Contingency '8700aLINE'
  Open branch from bus 73677 to bus 73681 ckt 1  /  73677 UNION AV 115 73681 WEST RIV 115 1
end
Contingency '8804ALINE'
  Open branch from bus 73684 to bus 73686 ckt 1  /  73684 ALLINGSA 115 73686 WDMONT A 115 1
end
Contingency '8809ALINE-1'
  Open branch from bus 73696 to bus 73700 ckt 1  /  73696 CONGRESA 115 73700 PEQUONIC 115 1
end
Contingency '8809ALINE-2'
  Open branch from bus 73694 to bus 73712 ckt 1  /  73694 BAIRD A  115 73712 CNGRES2A 115 1
end
Contingency '8904BLINE'
  Open branch from bus 73685 to bus 73687 ckt 1  /  73685 ALLINGSB 115 73687 WDMONT B 115 1
end
Contingency '8909BLINE-1'
  Open branch from bus 73697 to bus 73700 ckt 1  /  73697 CONGRESB 115 73700 PEQUONIC 115 1
end
Contingency '8909BLINE-2'
  Open branch from bus 73695 to bus 73713 ckt 1  /  73695 BAIRD B  115 73713 CNGRES2B 115 1
end
Contingency '9500LINE'
  Open branch from bus 73678 to bus 73680 ckt 1  /  73678 BROADWAY 115 73680 WATER ST 115 1
end
Contingency '9502LINE'
  Open branch from bus 73676 to bus 73678 ckt 1  /  73676 MILL RVR 115 73678 BROADWAY 115 1
end
Contingency '84004LINE'
  Open branch from bus 73672 to bus 73673 ckt 1  /  73672 SACKETT  115 73673 SACKPHS  115 1
  Open branch from bus 73673 to bus 73675 ckt 1  /  73673 SACKPHS  115 73675 MIX AVE  115 1
end
Contingency '88003ALINE'
  Open branch from bus 73669 to bus 73681 ckt 1  /  73669 GRAND AV 115 73681 WEST RIV 115 1
  Open branch from bus 73681 to bus 73682 ckt 1  /  73681 WEST RIV 115 73682 ELMWST A 115 1
  Open branch from bus 73682 to bus 73684 ckt 1  /  73682 ELMWST A 115 73684 ALLINGSA 115 1
  Open branch from bus 73682 to bus 73742 ckt 1  /  73682 ELMWST A 115 73742 ELMWEST 13.8 1
end
Contingency '88003ALINE-1'
  Open branch from bus 73669 to bus 73681 ckt 1  /  73669 GRAND AV 115 73681 WEST RIV 115 1
end
Contingency '88003ALINE-2'
  Open branch from bus 73681 to bus 73682 ckt 1  /  73681 WEST RIV 115 73682 ELMWST A 115 1
end
Contingency '88003ALINE-3'
```

This document may contain Critical Energy Infrastructure Information -Do Not Release

```
  Open branch from bus 73682 to bus 73684 ckt 1  /  73682 ELMWST A 115 73684 ALLINGSA 115 1
end
Contingency '88005ALINE'
  Open branch from bus 73690 to bus 73195 ckt 1  /  73690 DEVON178 115 73195 DEVON    115 1
  Open branch from bus 73688 to bus 73690 ckt 1  /  73688 MILVON A 115 73690 DEVON178 115 1
  Open branch from bus 73686 to bus 73688 ckt 1  /  73686 WDMONT A 115 73688 MILVON A 115 1
  Open branch from bus 73688 to bus 73748 ckt 1  /  73688 MILVON A 115 73748 MILVON  13.8 1
end
Contingency '88005ALINE-1'
  Open branch from bus 73686 to bus 73688 ckt 1  /  73686 WDMONT A 115 73688 MILVON A 115 1
end
Contingency '88005ALINE-2'
  Open branch from bus 73688 to bus 73690 ckt 1  /  73688 MILVON A 115 73690 DEVON178 115 1
end
Contingency '88006ALINE'
  Open branch from bus 73690 to bus 73692 ckt 1  /  73690 DEVON178 115 73692 BARNUM A 115 1
  Open branch from bus 73692 to bus 73694 ckt 1  /  73692 BARNUM A 115 73694 BAIRD A  115 1
  Open branch from bus 73694 to bus 73754 ckt 1  /  73694 BAIRD A  115 73754 BAIRD1  13.8 1
  Open branch from bus 73692 to bus 73752 ckt 1  /  73692 BARNUM A 115 73752 BARNUM  13.8 1
end
Contingency '89003BLINE'
  Open branch from bus 73669 to bus 73681 ckt 2  /  73669 GRAND AV 115 73681 WEST RIV 115 2
  Open branch from bus 73681 to bus 73683 ckt 1  /  73681 WEST RIV 115 73683 ELMWST B 115 1
  Open branch from bus 73683 to bus 73685 ckt 1  /  73683 ELMWST B 115 73685 ALLINGSB 115 1
  Open branch from bus 73683 to bus 73742 ckt 1  /  73683 ELMWST B 115 73742 ELMWEST 13.8 1
end
Contingency '89003BLINE-1'
  Open branch from bus 73669 to bus 73681 ckt 2  /  73669 GRAND AV 115 73681 WEST RIV 115 2
end
Contingency '89003BLINE-2'
  Open branch from bus 73681 to bus 73683 ckt 1  /  73681 WEST RIV 115 73683 ELMWST B 115 1
end
Contingency '89003BLINE-3'
  Open branch from bus 73683 to bus 73685 ckt 1  /  73683 ELMWST B 115 73685 ALLINGSB 115 1
end
Contingency '89005BLINE'
  Open branch from bus 73689 to bus 73691 ckt 1  /  73689 MILVON B 115 73691 DEVON179 115 1
  Open branch from bus 73687 to bus 73689 ckt 1  /  73687 WDMONT B 115 73689 MILVON B 115 1
  Open branch from bus 73689 to bus 73748 ckt 1  /  73689 MILVON B 115 73748 MILVON  13.8 1
end
Contingency '89005BLINE-1'
  Open branch from bus 73687 to bus 73689 ckt 1  /  73687 WDMONT B 115 73689 MILVON B 115 1
end
Contingency '89005BLINE-2'
  Open branch from bus 73689 to bus 73691 ckt 1  /  73689 MILVON B 115 73691 DEVON179 115 1
end
Contingency '89006BLINE'
  Open branch from bus 73691 to bus 73693 ckt 1  /  73691 DEVON179 115 73693 BARNUM B 115 1
  Open branch from bus 73693 to bus 73695 ckt 1  /  73693 BARNUM B 115 73695 BAIRD B  115 1
  Open branch from bus 73691 to bus 73195 ckt 1  /  73691 DEVON179 115 73195 DEVON    115 1
  Open branch from bus 73693 to bus 73752 ckt 1  /  73693 BARNUM B 115 73752 BARNUM  13.8 1
  Open branch from bus 73695 to bus 73761 ckt 2  /  73695 BAIRD B  115 73761 BAIRD2  13.8 2
end
Contingency '89006BLINE-1'
  Open branch from bus 73691 to bus 73693 ckt 1  /  73691 DEVON179 115 73693 BARNUM B 115 1
  Open branch from bus 73693 to bus 73695 ckt 1  /  73693 BARNUM B 115 73695 BAIRD B  115 1
  Open branch from bus 73693 to bus 73752 ckt 1  /  73693 BARNUM B 115 73752 BARNUM  13.8 1
  Open branch from bus 73695 to bus 73761 ckt 2  /  73695 BAIRD B  115 73761 BAIRD2  13.8 2
end
Contingency '91001LINE'
  Open branch from bus 73701 to bus 73702 ckt 1  /  73701 CRRA JCT 115 73702 CRRA XFO 115 1
  Open branch from bus 73700 to bus 73701 ckt 1  /  73700 PEQUONIC 115 73701 CRRA JCT 115 1
  Open branch from bus 73701 to bus 73703 ckt 1  /  73701 CRRA JCT 115 73703 ASHCREEK 115 1
end
Contingency '301-302LNS'
  Open branch from bus 72925 to bus 72929 ckt 1  /  72925 LUDLOW   345 72929 BELCH301 345 1
  Open branch from bus 72929 to bus 71796 ckt 1  /  72929 BELCH301 345 71796 CARP HL  345 1
  Open branch from bus 71796 to bus 71797 ckt 1  /  71796 CARP HL  345 71797 MILLBURY 345 1
  Open branch from bus 72925 to bus 72972 ckt 1  /  72925 LUDLOW   345 72972 LUDLOW   115 1
end
```

This document may contain Critical Energy Infrastructure Information -Do Not Release

```
Contingency '310LINE'
   Open branch from bus 73110 to bus 73112 ckt 1  /  73110 MILLSTNE 345 73112 MANCHSTR 345 1
end
Contingency '312LINE'
   Open branch from bus 72924 to bus 72928 ckt 1  /  72924 BERKSHRE 345 72928 MANY393  345 1
   Open branch from bus 72924 to bus 72952 ckt 1  /  72924 BERKSHRE 345 72952 BERKSHIR 115 1
   Open branch from bus 72924 to bus 72926 ckt 1  /  72924 BERKSHRE 345 72926 NRTHFLD  345 1
end
Contingency '312+393LNS'
   Open branch from bus 72924 to bus 72928 ckt 1  /  72924 BERKSHRE 345 72928 MANY393  345 1
   Open branch from bus 72924 to bus 72952 ckt 1  /  72924 BERKSHRE 345 72952 BERKSHIR 115 1
   Open branch from bus 72924 to bus 72926 ckt 1  /  72924 BERKSHRE 345 72926 NRTHFLD  345 1
end
Contingency '312+393REAC'
   Open branch from bus 72924 to bus 72926 ckt 1  /  72924 BERKSHRE 345 72926 NRTHFLD  345 1
   Open branch from bus 72924 to bus 72928 ckt 1  /  72924 BERKSHRE 345 72928 MANY393  345 1
   Open branch from bus 78700 to bus 72928 ckt 1  /  78700 ALPS345  345 72928 MANY393  345 1
   Open branch from bus 72924 to bus 72952 ckt 1  /  72924 BERKSHRE 345 72952 BERKSHIR 115 1
   Open branch from bus 70508 to bus 70509 ckt 2  /  70508 SANDB115 115 70509 SB RCTOR 115 2
end
Contingency '321LINE'
   Open branch from bus 73105 to bus 73115 ckt 1  /  73105 LONG MTN 345 73115 PLUMTREE 345 1
end
Contingency '329LINE'
   Open branch from bus 73104 to bus 73106 ckt 1  /  73104 FRSTBDGE 345 73106 SOUTHGTN 345 1
end
Contingency '330LINE'
   Open branch from bus 73108 to bus 73119 ckt 1  /  73108 CARD     345 73119 LAKEROAD 345 1
end
// Contingency '3348LINE+SPS'
//    Open branch from bus 73123 to bus 73304 ckt 1  /  73123 KILLINGL 345 73304 KILLINGL 115 1
//    Open branch from bus 73119 to bus 73123 ckt 1  /  73119 LAKEROAD 345 73123 KILLINGL 345 1
//    Open branch from bus 73119 to bus 73565 ckt 1  /  73119 LAKEROAD 345 73565 LAKERD#121.0 1
//    Open branch from bus 73119 to bus 73566 ckt 1  /  73119 LAKEROAD 345 73566 LAKERD#221.0 1
//    Open branch from bus 73119 to bus 73567 ckt 1  /  73119 LAKEROAD 345 73567 LAKERD#321.0 1
// end
Contingency '347LINE'
   Open branch from bus 73118 to bus 71336 ckt 1  /  73118 CTRI347  345 71336 SHERMAN  345 1
   Open branch from bus 73118 to bus 73123 ckt 1  /  73118 CTRI347  345 73123 KILLINGL 345 1
end
// Contingency '347E&LRSPS'
//    Open branch from bus 73118 to bus 73123 ckt 1  /  73118 CTRI347  345 73123 KILLINGL 345 1
//    Open branch from bus 73118 to bus 71336 ckt 1  /  73118 CTRI347  345 71336 SHERMAN  345 1
//    Open branch from bus 73119 to bus 73565 ckt 1  /  73119 LAKEROAD 345 73565 LAKERD#121.0 1
//    Open branch from bus 73119 to bus 73566 ckt 1  /  73119 LAKEROAD 345 73566 LAKERD#221.0 1
//    Open branch from bus 73119 to bus 73567 ckt 1  /  73119 LAKEROAD 345 73567 LAKERD#321.0 1
// end
Contingency '348LINE'
   Open branch from bus 73121 to bus 73230 ckt 1  /  73121 HADAUTO  345 73230 HADDAM   115 1
   Open branch from bus 73121 to bus 73295 ckt 1  /  73121 HADAUTO  345 73295 BESECK   345 1
   Open branch from bus 73110 to bus 73121 ckt 1  /  73110 MILLSTNE 345 73121 HADAUTO  345 1
end
Contingency '352LINE'
   Open branch from bus 73104 to bus 73105 ckt 1  /  73104 FRSTBDGE 345 73105 LONG MTN 345 1
end
Contingency '352+AUTO'
   Open branch from bus 73104 to bus 73105 ckt 1  /  73104 FRSTBDGE 345 73105 LONG MTN 345 1
   Open branch from bus 73104 to bus 73202 ckt 1  /  73104 FRSTBDGE 345 73202 FROST BR 115 1
end
Contingency '3424LINE'
   Open branch from bus 73112 to bus 73114 ckt 1  /  73112 MANCHSTR 345 73114 PORT JCT 345 1
   Open branch from bus 73114 to bus 73500 ckt 1  /  73114 PORT JCT 345 73500 KLEENTAP 345 1
   Open branch from bus 73112 to bus 73242 ckt 1  /  73112 MANCHSTR 345 73242 MANCHSTR 115 1
end
Contingency '353LINE'
   Open branch from bus 73107 to bus 73500 ckt 1  /  73107 SCOVL RK 345 73500 KLEENTAP 345 1
end
Contingency '354LINE'
   Open branch from bus 72925 to bus 72926 ckt 1  /  72925 LUDLOW   345 72926 NRTHFLD  345 1
end
```

This document may contain Critical Energy Infrastructure Information -Do Not Release

```
Contingency '364+AUTO'
  Open branch from bus 73109 to bus 73210 ckt 1  /  73109 MONTVILE 345 73210 MONTVLLE 115 1
  Open branch from bus 73109 to bus 73113 ckt 1  /  73109 MONTVILE 345 73113 HADDM NK 345 1
end
Contingency '368LINE'
  Open branch from bus 73108 to bus 73112 ckt 1  /  73108 CARD     345 73112 MANCHSTR 345 1
end
Contingency '371LINE'
  Open branch from bus 73109 to bus 73110 ckt 1  /  73109 MONTVILE 345 73110 MILLSTNE 345 1
end
Contingency '371+AUTO'
  Open branch from bus 73109 to bus 73110 ckt 1  /  73109 MONTVILE 345 73110 MILLSTNE 345 1
  Open branch from bus 73109 to bus 73210 ckt 1  /  73109 MONTVILE 345 73210 MONTVLLE 115 1
end
Contingency '376LINE'
  Open branch from bus 73107 to bus 73113 ckt 1  /  73107 SCOVL RK 345 73113 HADDM NK 345 1
end
Contingency '381LINE'
  Open branch from bus 72926 to bus 72927 ckt 1  /  72926 NRTHFLD  345 72927 MANH381  345 1
  Open branch from bus 70486 to bus 72927 ckt 1  /  70486 VTYNK345 345 72927 MANH381  345 1
end
Contingency '381LREAC'
  Open branch from bus 72926 to bus 72927 ckt 1  /  72926 NRTHFLD  345 72927 MANH381  345 1
  Open branch from bus 70486 to bus 72927 ckt 1  /  70486 VTYNK345 345 72927 MANH381  345 1
  Open branch from bus 70508 to bus 70509 ckt 2  /  70508 SANDB115 115 70509 SB RCTOR 115 2
end
Contingency '383LINE'
  Open branch from bus 73108 to bus 73110 ckt 1  /  73108 CARD     345 73110 MILLSTNE 345 1
end
Contingency '384LINE'
  Open branch from bus 73116 to bus 73557 ckt 1  /  73116 MIDDLTWN 345 73557 MIDDTN#422.0 1
  Open branch from bus 73107 to bus 73116 ckt 1  /  73107 SCOVL RK 345 73116 MIDDLTWN 345 1
end
Contingency '387LINE'
  Open branch from bus 73664 to bus 73107 ckt 1  /  73664 CSC-HVDC 345 73107 SCOVL RK 345 1
  Open branch from bus 73663 to bus 73664 ckt 1  /  73663 E.SHORE  345 73664 CSC-HVDC 345 1
  Open branch from bus 73663 to bus 73668 ckt 1  /  73663 E.SHORE  345 73668 E.SHORE  115 1
  Open branch from bus 73663 to bus 73668 ckt 2  /  73663 E.SHORE  345 73668 E.SHORE  115 2
end
Contingency '393LINE'
  Open branch from bus 78700 to bus 72928 ckt 1  /  78700 ALPS345  345 72928 MANY393  345 1
end
Contingency '395NLINE'
  Open branch from bus 72925 to bus 73124 ckt 1  /  72925 LUDLOW   345 73124 BHAUTO   345 1
end
Contingency '395SLINE'
  Open branch from bus 73103 to bus 73124 ckt 1  /  73103 MEEKVL J 345 73124 BHAUTO   345 1
  Open branch from bus 73103 to bus 73112 ckt 1  /  73103 MEEKVL J 345 73112 MANCHSTR 345 1
  Open branch from bus 73103 to bus 73111 ckt 1  /  73103 MEEKVL J 345 73111 NOBLMFLD 345 1
  Open branch from bus 73111 to bus 73244 ckt 1  /  73111 NOBLMFLD 345 73244 N.BLMFLD 115 1
end
Contingency '395+BHAUTO'
  Open branch from bus 72925 to bus 73124 ckt 1  /  72925 LUDLOW   345 73124 BHAUTO   345 1
  Open branch from bus 73103 to bus 73124 ckt 1  /  73103 MEEKVL J 345 73124 BHAUTO   345 1
  Open branch from bus 73103 to bus 73112 ckt 1  /  73103 MEEKVL J 345 73112 MANCHSTR 345 1
  Open branch from bus 73103 to bus 73111 ckt 1  /  73103 MEEKVL J 345 73111 NOBLMFLD 345 1
  Open branch from bus 73111 to bus 73244 ckt 1  /  73111 NOBLMFLD 345 73244 N.BLMFLD 115 1
  Open branch from bus 73219 to bus 73124 ckt 1  /  73219 BARBR HL 115 73124 BHAUTO   345 1
end
Contingency 'BHAUTO'
  Open branch from bus 73219 to bus 73124 ckt 1  /  73219 BARBR HL 115 73124 BHAUTO   345 1
end
Contingency 'BHILLSTK'
  Open branch from bus 72925 to bus 73124 ckt 1  /  72925 LUDLOW   345 73124 BHAUTO   345 1
  Open branch from bus 73219 to bus 73124 ckt 1  /  73219 BARBR HL 115 73124 BHAUTO   345 1
end
Contingency '398LINE'
  Open branch from bus 73105 to bus 73117 ckt 1  /  73105 LONG MTN 345 73117 CTNY398  345 1
  Open branch from bus 74344 to bus 73117 ckt 1  /  74344 PLTVLLEY 345 73117 CTNY398  345 1
end
```

This document may contain Critical Energy Infrastructure Information -Do Not Release

```
Contingency '398LREAC'
  Open branch from bus 73105 to bus 73117 ckt 1  /  73105 LONG MTN 345 73117 CTNY398  345 1
  Open branch from bus 70508 to bus 70509 ckt 2  /  70508 SANDB115 115 70509 SB RCTOR 115 2
  Open branch from bus 74344 to bus 73117 ckt 1  /  74344 PLTVLLEY 345 73117 CTNY398  345 1
end
Contingency '1000-1090DCT'
  Open branch from bus 73210 to bus 73611 ckt 1  /  73210 MONTVLLE 115 73611 DUDLEY T 115 1
  Open branch from bus 73611 to bus 73612 ckt 1  /  73611 DUDLEY T 115 73612 BEAN HLL 115 1
  Open branch from bus 73210 to bus 73291 ckt 1  /  73210 MONTVLLE 115 73291 FORTHF   115 1
end
Contingency '1060-1165DCT'
  Open branch from bus 73170 to bus 73176 ckt 1  /  73170 PLUMTREE 115 73176 TRIANGLE 115 1
  Open branch from bus 73170 to bus 73176 ckt 2  /  73170 PLUMTREE 115 73176 TRIANGLE 115 2
end
Contingency '1070-1080DCT'
  Open branch from bus 73214 to bus 73215 ckt 1  /  73214 WAWECS J 115 73215 CARD     115 1
  Open branch from bus 73210 to bus 73214 ckt 1  /  73210 MONTVLLE 115 73214 WAWECS J 115 1
  Open branch from bus 73214 to bus 73276 ckt 1  /  73214 WAWECS J 115 73276 LISBN PF 115 1
  Open branch from bus 73213 to bus 73276 ckt 1  /  73213 TUNNEL   115 73276 LISBN PF 115 1
  Open branch from bus 73218 to bus 73291 ckt 1  /  73218 STKHOUSE 115 73291 FORTHF   115 1
  Open branch from bus 73215 to bus 73218 ckt 1  /  73215 CARD     115 73218 STKHOUSE 115 1
end
Contingency '1080-1280DCT'
  Open branch from bus 73214 to bus 73215 ckt 1  /  73214 WAWECS J 115 73215 CARD     115 1
  Open branch from bus 73210 to bus 73214 ckt 1  /  73210 MONTVLLE 115 73214 WAWECS J 115 1
  Open branch from bus 73214 to bus 73276 ckt 1  /  73214 WAWECS J 115 73276 LISBN PF 115 1
  Open branch from bus 73213 to bus 73276 ckt 1  /  73213 TUNNEL   115 73276 LISBN PF 115 1
  Open branch from bus 73216 to bus 73217 ckt 1  /  73216 WHIP JCT 115 73217 BUDDGTN  115 1
  Open branch from bus 73177 to bus 73216 ckt 1  /  73177 MYSTICCT 115 73216 WHIP JCT 115 1
  Open branch from bus 73210 to bus 73216 ckt 1  /  73210 MONTVLLE 115 73216 WHIP JCT 115 1
end
Contingency '1080-1490DCT'
  Open branch from bus 73214 to bus 73215 ckt 1  /  73214 WAWECS J 115 73215 CARD     115 1
  Open branch from bus 73210 to bus 73214 ckt 1  /  73210 MONTVLLE 115 73214 WAWECS J 115 1
  Open branch from bus 73215 to bus 73218 ckt 1  /  73215 CARD     115 73218 STKHOUSE 115 1
  Open branch from bus 73214 to bus 73276 ckt 1  /  73214 WAWECS J 115 73276 LISBN PF 115 1
  Open branch from bus 73213 to bus 73276 ckt 1  /  73213 TUNNEL   115 73276 LISBN PF 115 1
end
Contingency '1100-1200DCT'
  Open branch from bus 73219 to bus 73220 ckt 1  /  73219 BARBR HL 115 73220 ENFIELD  115 1
  Open branch from bus 73219 to bus 73222 ckt 1  /  73219 BARBR HL 115 73222 WNDSRLK  115 1
end
Contingency '1100-1300DCT'
  Open branch from bus 73219 to bus 73220 ckt 1  /  73219 BARBR HL 115 73220 ENFIELD  115 1
  Open branch from bus 73220 to bus 73222 ckt 1  /  73220 ENFIELD  115 73222 WNDSRLK  115 1
  Open branch from bus 73222 to bus 73539 ckt 1  /  73222 WNDSRLK  115 73539 DEXTR PF13.8 1
end
Contingency '1130-1430DCT'
  Open branch from bus 73700 to bus 73286 ckt 1  /  73700 PEQUONIC 115 73286 COMPO    115 1
  Open branch from bus 73267 to bus 73300 ckt 1  /  73267 DARIEN   115 73300 ELYTAP   115 1
  Open branch from bus 73286 to bus 73300 ckt 1  /  73286 COMPO    115 73300 ELYTAP   115 1
  Open branch from bus 73714 to bus 73173 ckt 1  /  73714 ASHCREAC 115 73173 SASCO CR 115 1
  Open branch from bus 73703 to bus 73714 ckt 1  /  73703 ASHCREEK 115 73714 ASHCREAC 115 1
end
Contingency '113091001DCT'
  Open branch from bus 73701 to bus 73702 ckt 1  /  73701 CRRA JCT 115 73702 CRRA XFO 115 1
  Open branch from bus 73700 to bus 73701 ckt 1  /  73700 PEQUONIC 115 73701 CRRA JCT 115 1
  Open branch from bus 73701 to bus 73703 ckt 1  /  73701 CRRA JCT 115 73703 ASHCREEK 115 1
  Open branch from bus 73700 to bus 73286 ckt 1  /  73700 PEQUONIC 115 73286 COMPO    115 1
  Open branch from bus 73267 to bus 73300 ckt 1  /  73267 DARIEN   115 73300 ELYTAP   115 1
  Open branch from bus 73286 to bus 73300 ckt 1  /  73286 COMPO    115 73300 ELYTAP   115 1
end
Contingency '1163-1550D-2'
  Open branch from bus 73127 to bus 73154 ckt 2  /  73127 SGTNB RX 115 73154 SGTN B   115 2
  Open branch from bus 73127 to bus 73204 ckt 1  /  73127 SGTNB RX 115 73204 TODD     115 1
  Open branch from bus 73204 to bus 73205 ckt 1  /  73204 TODD     115 73205 NOERA JB 115 1
  Open branch from bus 73201 to bus 73205 ckt 1  /  73201 NOERA    115 73205 NOERA JB 115 1
  Open branch from bus 73202 to bus 73205 ckt 1  /  73202 FROST BR 115 73205 NOERA JB 115 1
  Open branch from bus 73128 to bus 73154 ckt 2  /  73128 SGTNB2 R 115 73154 SGTN B   115 2
  Open branch from bus 73128 to bus 73211 ckt 1  /  73128 SGTNB2 R 115 73211 CANAL    115 1
```

This document may contain Critical Energy Infrastructure Information -Do Not Release

```
  Open branch from bus 73200 to bus 73211 ckt 1  /  73200 NOERA JA 115 73211 CANAL    115 1
  Open branch from bus 73181 to bus 73200 ckt 1  /  73181 NOERA    115 73200 NOERA JA 115 1
  Open branch from bus 73200 to bus 73202 ckt 1  /  73200 NOERA JA 115 73202 FROST BR 115 1
end
Contingency '1207-1775DCT'
  Open branch from bus 73242 to bus 73250 ckt 1  /  73242 MANCHSTR 115 73250 E.HTFD   115 1
  Open branch from bus 73242 to bus 73253 ckt 1  /  73242 MANCHSTR 115 73253 1775 TAP 115 1
  Open branch from bus 73246 to bus 73253 ckt 1  /  73246 S.MEADOW 115 73253 1775 TAP 115 1
  Open branch from bus 73253 to bus 73274 ckt 1  /  73253 1775 TAP 115 73274 RIVDRHIA 115 1
  Open branch from bus 73274 to bus 73537 ckt 1  /  73274 RIVDRHIA 115 73537 RVRSD PF23.0 1
end
Contingency '1208-1640DCT'
  Open branch from bus 73198 to bus 73631 ckt 1  /  73198 SOUTHGTN 115 73631 WLNGFD   115 1
  Open branch from bus 73195 to bus 73631 ckt 1  /  73195 DEVON    115 73631 WLNGFD   115 1
end
Contingency '1222-1730DCT'
  Open branch from bus 73709 to bus 73711 ckt 1  /  73709 OLD TOWN 115 73711 HAWTH R  115 1
  Open branch from bus 73710 to bus 73711 ckt 1  /  73710 HAWTHORN 115 73711 HAWTH R  115 1
  Open branch from bus 73710 to bus 73711 ckt 2  /  73710 HAWTHORN 115 73711 HAWTH R  115 2
  Open branch from bus 73724 to bus 73158 ckt 1  /  73724 TRMB1714 115 73158 WESTON   115 1
end
Contingency '1261-1598DCT'
  Open branch from bus 73230 to bus 73231 ckt 1  /  73230 HADDAM   115 73231 BOKUM    115 1
  Open branch from bus 73230 to bus 73231 ckt 2  /  73230 HADDAM   115 73231 BOKUM    115 2
  Open branch from bus 73231 to bus 73423 ckt 1  /  73231 BOKUM    115 73423 BOKUM   27.6 1
  Open branch from bus 73231 to bus 73423 ckt 2  /  73231 BOKUM    115 73423 BOKUM   27.6 2
end
Contingency '1272-1721DCT'
  Open branch from bus 73183 to bus 73185 ckt 1  /  73183 SHAWSHIL 115 73185 BUNKER H 115 1
  Open branch from bus 73183 to bus 73202 ckt 1  /  73183 SHAWSHIL 115 73202 FROST BR 115 1
  Open branch from bus 73189 to bus 73202 ckt 1  /  73189 FREIGHT  115 73202 FROST BR 115 1
end
Contingency '1280-1870DCT'
  Open branch from bus 73177 to bus 73216 ckt 1  /  73177 MYSTICCT 115 73216 WHIP JCT 115 1
  Open branch from bus 73210 to bus 73216 ckt 1  /  73210 MONTVLLE 115 73216 WHIP JCT 115 1
  Open branch from bus 73177 to bus 73303 ckt 1  /  73177 MYSTICCT 115 73303 SHUNOCK  115 1
  Open branch from bus 73216 to bus 73217 ckt 1  /  73216 WHIP JCT 115 73217 BUDDGTN  115 1
  Open branch from bus 73285 to bus 73303 ckt 1  /  73285 CTRI1870 115 73303 SHUNOCK  115 1
  Open branch from bus 73285 to bus 72581 ckt 1  /  73285 CTRI1870 115 72581 WOOD RIV 115 1
end
Contingency '1310-1763DCT'
  Open branch from bus 73219 to bus 73242 ckt 1  /  73219 BARBR HL 115 73242 MANCHSTR 115 1
  Open branch from bus 73221 to bus 73242 ckt 1  /  73221 SO.WNDSR 115 73242 MANCHSTR 115 1
end
Contingency '1355-1610DCT'
  Open branch from bus 73184 to bus 73634 ckt 1  /  73184 LUCHJB55 115 73634 COLONY   115 1
  Open branch from bus 73182 to bus 73184 ckt 1  /  73182 HANOVERB 115 73184 LUCHJB55 115 1
  Open branch from bus 73184 to bus 73198 ckt 1  /  73184 LUCHJB55 115 73198 SOUTHGTN 115 1
  Open branch from bus 73707 to bus 73196 ckt 1  /  73707 JUNE ST  115 73196 GLEN JCT 115 1
  Open branch from bus 73675 to bus 73196 ckt 1  /  73675 MIX AVE  115 73196 GLEN JCT 115 1
  Open branch from bus 73196 to bus 73198 ckt 1  /  73196 GLEN JCT 115 73198 SOUTHGTN 115 1
end
Contingency '1389-1880DCT'
  Open branch from bus 73172 to bus 73207 ckt 1  /  73172 NORWALK  115 73207 FLAX HIL 115 1
  Open branch from bus 73169 to bus 73172 ckt 1  /  73169 RYTN J A 115 73172 NORWALK  115 1
  Open branch from bus 73168 to bus 73169 ckt 1  /  73168 GLNBROOK 115 73169 RYTN J A 115 1
  Open branch from bus 73169 to bus 73171 ckt 1  /  73169 RYTN J A 115 73171 NWLK HAR 115 1
end
Contingency '1394-1515DCT'
  Open branch from bus 72978 to bus 73266 ckt 1  /  72978 FRANCONA 115 73266 SCITICO  115 1
  Open branch from bus 72972 to bus 73266 ckt 1  /  72972 LUDLOW   115 73266 SCITICO  115 1
end
Contingency '1416-1867DCT'
  Open branch from bus 73207 to bus 73271 ckt 1  /  73207 FLAX HIL 115 73271 RYTN J B 115 1
  Open branch from bus 73168 to bus 73271 ckt 1  /  73168 GLNBROOK 115 73271 RYTN J B 115 1
  Open branch from bus 73171 to bus 73271 ckt 1  /  73171 NWLK HAR 115 73271 RYTN J B 115 1
  Open branch from bus 73700 to bus 73286 ckt 1  /  73700 PEQUONIC 115 73286 COMPO    115 1
  Open branch from bus 73267 to bus 73300 ckt 1  /  73267 DARIEN   115 73300 ELYTAP   115 1
  Open branch from bus 73286 to bus 73300 ckt 1  /  73286 COMPO    115 73300 ELYTAP   115 1
end
```

This document may contain Critical Energy Infrastructure Information -Do Not Release

```
Contingency '1416-1880DCT'
  Open branch from bus 73169 to bus 73172 ckt 1  /  73169 RYTN J A 115 73172 NORWALK  115 1
  Open branch from bus 73168 to bus 73169 ckt 1  /  73168 GLNBROOK 115 73169 RYTN J A 115 1
  Open branch from bus 73169 to bus 73171 ckt 1  /  73169 RYTN J A 115 73171 NWLK HAR 115 1
  Open branch from bus 73700 to bus 73286 ckt 1  /  73700 PEQUONIC 115 73286 COMPO    115 1
  Open branch from bus 73267 to bus 73300 ckt 1  /  73267 DARIEN   115 73300 ELYTAP   115 1
  Open branch from bus 73286 to bus 73300 ckt 1  /  73286 COMPO    115 73300 ELYTAP   115 1
end
Contingency '1416-1890DCT'
  Open branch from bus 73173 to bus 73237 ckt 1  /  73173 SASCO CR 115 73237 ELYAVE   115 1
  Open branch from bus 73168 to bus 73237 ckt 1  /  73168 GLNBROOK 115 73237 ELYAVE   115 1
  Open branch from bus 73171 to bus 73237 ckt 1  /  73171 NWLK HAR 115 73237 ELYAVE   115 1
  Open branch from bus 73700 to bus 73286 ckt 1  /  73700 PEQUONIC 115 73286 COMPO    115 1
  Open branch from bus 73267 to bus 73300 ckt 1  /  73267 DARIEN   115 73300 ELYTAP   115 1
  Open branch from bus 73286 to bus 73300 ckt 1  /  73286 COMPO    115 73300 ELYTAP   115 1
end
Contingency '1440-1450DCT'
  Open branch from bus 73162 to bus 73168 ckt 1  /  73162 WATERSDE 115 73168 GLNBROOK 115 1
  Open branch from bus 73167 to bus 73168 ckt 1  /  73167 SO.END   115 73168 GLNBROOK 115 1
end
Contingency '1470-1565DCT'
  Open branch from bus 73174 to bus 73370 ckt 1  /  73174 PEACEABL 115 73370 PEACEABL13.8 1
  Open branch from bus 73174 to bus 73370 ckt 2  /  73174 PEACEABL 115 73370 PEACEABL13.8 2
  Open branch from bus 73174 to bus 73139 ckt 1  /  73174 PEACEABL 115 73139 PT3260   115 1
  Open branch from bus 73143 to bus 73174 ckt 1  /  73143 RDGEFLDA 115 73174 PEACEABL 115 1
  Open branch from bus 73155 to bus 73174 ckt 1  /  73155 RDGFLD J 115 73174 PEACEABL 115 1
  Open branch from bus 73143 to bus 73372 ckt 1  /  73143 RDGEFLDA 115 73372 RDGEFLD 13.8 1
  Open branch from bus 73143 to bus 73139 ckt 1  /  73143 RDGEFLDA 115 73139 PT3260   115 1
  Open branch from bus 73155 to bus 73170 ckt 1  /  73155 RDGFLD J 115 73170 PLUMTREE 115 1
  Open branch from bus 73146 to bus 73155 ckt 1  /  73146 RDGEFLDB 115 73155 RDGFLD J 115 1
  Open branch from bus 73146 to bus 73372 ckt 1  /  73146 RDGEFLDB 115 73372 RDGEFLD 13.8 1
end
Contingency '1470S_1880'
  Open branch from bus 73172 to bus 73296 ckt 1  /  73172 NORWALK  115 73296 WLTON115 115 1
  Open branch from bus 73296 to bus 73354 ckt 1  /  73296 WLTON115 115 73354 WLTON13813.8 1
  Open branch from bus 73169 to bus 73171 ckt 1  /  73169 RYTN J A 115 73171 NWLK HAR 115 1
  Open branch from bus 73169 to bus 73172 ckt 1  /  73169 RYTN J A 115 73172 NORWALK  115 1
  Open branch from bus 73168 to bus 73169 ckt 1  /  73168 GLNBROOK 115 73169 RYTN J A 115 1
end
Contingency '1505-1607DCT'
  Open branch from bus 73213 to bus 73223 ckt 1  /  73213 TUNNEL   115 73223 FRYBRT05 115 1
  Open branch from bus 73223 to bus 73236 ckt 1  /  73223 FRYBRT05 115 73236 FRYBR05  115 1
  Open branch from bus 73236 to bus 73443 ckt 1  /  73236 FRYBR05  115 73443 FRY BRK 23.0 1
  Open branch from bus 73223 to bus 73270 ckt 1  /  73223 FRYBRT05 115 73270 BROOKLYN 115 1
  Open branch from bus 73270 to bus 73304 ckt 1  /  73270 BROOKLYN 115 73304 KILLINGL 115 1
  Open branch from bus 73270 to bus 73444 ckt 1  /  73270 BROOKLYN 115 73444 BROOKLYN23.0 1
  Open branch from bus 73213 to bus 73226 ckt 1  /  73213 TUNNEL   115 73226 FRYBRT07 115 1
  Open branch from bus 73226 to bus 73229 ckt 1  /  73226 FRYBRT07 115 73229 FRY BR07 115 1
  Open branch from bus 73226 to bus 73281 ckt 1  /  73226 FRYBRT07 115 73281 EXETR PF 115 1
  Open branch from bus 73281 to bus 73304 ckt 1  /  73281 EXETR PF 115 73304 KILLINGL 115 1
  Open branch from bus 73229 to bus 73443 ckt 1  /  73229 FRY BR07 115 73443 FRY BRK 23.0 1
end
Contingency '1545-1570DCT'
  Open branch from bus 73126 to bus 73192 ckt 1  /  73126 DEVON#2  115 73192 DRBY J B 115 1
  Open branch from bus 73188 to bus 73192 ckt 1  /  73188 BCNFL PF 115 73192 DRBY J B 115 1
  Open branch from bus 73705 to bus 73192 ckt 1  /  73705 IND.WELL 115 73192 DRBY J B 115 1
  Open branch from bus 73704 to bus 73126 ckt 1  /  73704 TRAP FLS 115 73126 DEVON#2  115 1
end
Contingency '1560-1570DCT'
  Open branch from bus 73704 to bus 73191 ckt 1  /  73704 TRAP FLS 115 73191 DRBY J A 115 1
  Open branch from bus 73187 to bus 73191 ckt 1  /  73187 STEVENSN 115 73191 DRBY J A 115 1
  Open branch from bus 73706 to bus 73191 ckt 1  /  73706 ANSONIA  115 73191 DRBY J A 115 1
  Open branch from bus 73126 to bus 73192 ckt 1  /  73126 DEVON#2  115 73192 DRBY J B 115 1
  Open branch from bus 73188 to bus 73192 ckt 1  /  73188 BCNFL PF 115 73192 DRBY J B 115 1
  Open branch from bus 73705 to bus 73192 ckt 1  /  73705 IND.WELL 115 73192 DRBY J B 115 1
end
/ Contingency '1570-1575DC'
/   Open branch from bus 73126 to bus 73192 ckt 1  /  73126 DEVON#2  115 73192 DRBY J B 115 1
/   Open branch from bus 73188 to bus 73192 ckt 1  /  73188 BCNFL PF 115 73192 DRBY J B 115 1
/   Open branch from bus 73705 to bus 73192 ckt 1  /  73705 IND.WELL 115 73192 DRBY J B 115 1
```

This document may contain Critical Energy Infrastructure Information -Do Not Release

```
/    Open branch from bus 73188 to bus 73228 ckt 1  /  73188 BCNFL PF 115 73228 BALDWNJB 115 1
/    Open branch from bus 73185 to bus 73228 ckt 1  /  73185 BUNKER H 115 73228 BALDWNJB 115 1
/    Open branch from bus 73160 to bus 73228 ckt 1  /  73160 BALDWINB 115 73228 BALDWNJB 115 1
/    Open branch from bus 73160 to bus 73382 ckt 1  /  73160 BALDWINB 115 73382 BALDWINB13.8 1
/ end
 Contingency '1570-1575DC1'
    Open branch from bus 73126 to bus 73192 ckt 1  /  73126 DEVON#2  115 73192 DRBY J B 115 1
    Open branch from bus 73188 to bus 73192 ckt 1  /  73188 BCNFL PF 115 73192 DRBY J B 115 1
    Open branch from bus 73705 to bus 73192 ckt 1  /  73705 IND.WELL 115 73192 DRBY J B 115 1
    Open branch from bus 73188 to bus 73130 ckt 1  /
    Open branch from bus 73130 to bus 73136 ckt 1  /
 end
 Contingency '1570-1575DC2'
    Open branch from bus 73126 to bus 73192 ckt 1  /  73126 DEVON#2  115 73192 DRBY J B 115 1
    Open branch from bus 73188 to bus 73192 ckt 1  /  73188 BCNFL PF 115 73192 DRBY J B 115 1
    Open branch from bus 73705 to bus 73192 ckt 1  /  73705 IND.WELL 115 73192 DRBY J B 115 1
    Open branch from bus 73130 to bus 73228 ckt 1  /
    Open branch from bus 73130 to bus 73136 ckt 1  /
    Open branch from bus 73185 to bus 73228 ckt 1  /  73185 BUNKER H 115 73228 BALDWNJB 115 1
    Open branch from bus 73160 to bus 73228 ckt 1  /  73160 BALDWINB 115 73228 BALDWNJB 115 1
    Open branch from bus 73160 to bus 73382 ckt 1  /  73160 BALDWINB 115 73382 BALDWINB13.8 1
 end
 Contingency '1570-1580DCT'
    Open branch from bus 73126 to bus 73192 ckt 1  /  73126 DEVON#2  115 73192 DRBY J B 115 1
    Open branch from bus 73188 to bus 73192 ckt 1  /  73188 BCNFL PF 115 73192 DRBY J B 115 1
    Open branch from bus 73705 to bus 73192 ckt 1  /  73705 IND.WELL 115 73192 DRBY J B 115 1
    Open branch from bus 73126 to bus 73199 ckt 1  /  73126 DEVON#2  115 73199 SO.NAUG  115 1
 end
/ Contingency '1575-1585'-revised as per below
/    Open branch from bus 73185 to bus 73199 ckt 1  /  73185 BUNKER H 115 73199 SO.NAUG  115 1
/    Open branch from bus 73160 to bus 73228 ckt 1  /  73160 BALDWINB 115 73228 BALDWNJB 115 1
/    Open branch from bus 73185 to bus 73228 ckt 1  /  73185 BUNKER H 115 73228 BALDWNJB 115 1
/    Open branch from bus 73188 to bus 73228 ckt 1  /  73188 BCNFL PF 115 73228 BALDWNJB 115 1
/    Open branch from bus 73160 to bus 73382 ckt 1  /  73160 BALDWINB 115 73382 BALDWINB13.8 1
/ end
 Contingency '1575-1585-1'
    Open branch from bus 73185 to bus 73199 ckt 1  /  73185 BUNKER H 115 73199 SO.NAUG  115 1
    Open branch from bus 73188 to bus 73130 ckt 1  /
    Open branch from bus 73130 to bus 73136 ckt 1  /
 end
 Contingency '1575-1585-2'
    Open branch from bus 73185 to bus 73199 ckt 1  /  73185 BUNKER H 115 73199 SO.NAUG  115 1
    Open branch from bus 73130 to bus 73228 ckt 1  /
    Open branch from bus 73130 to bus 73136 ckt 1  /
    Open branch from bus 73185 to bus 73228 ckt 1  /  73185 BUNKER H 115 73228 BALDWNJB 115 1
    Open branch from bus 73160 to bus 73228 ckt 1  /  73160 BALDWINB 115 73228 BALDWNJB 115 1
    Open branch from bus 73160 to bus 73382 ckt 1  /  73160 BALDWINB 115 73382 BALDWINB13.8 1
 end
/ Contingency '1575-1990'
/    Open branch from bus 73164 to bus 73202 ckt 1  /  73164 BALDWNJA 115 73202 FROST BR 115 1
/    Open branch from bus 73164 to bus 73186 ckt 1  /  73164 BALDWNJA 115 73186 BALDWINA 115 1
/    Open branch from bus 73164 to bus 73333 ckt 1  /  73164 BALDWNJA 115 73333 JACKSHL  115 1
/    Open branch from bus 73186 to bus 73386 ckt 1  /  73186 BALDWINA 115 73386 BALDWINA13.8 1
/    Open branch from bus 73188 to bus 73228 ckt 1  /  73188 BCNFL PF 115 73228 BALDWNJB 115 1
/    Open branch from bus 73185 to bus 73228 ckt 1  /  73185 BUNKER H 115 73228 BALDWNJB 115 1
/    Open branch from bus 73160 to bus 73228 ckt 1  /  73160 BALDWINB 115 73228 BALDWNJB 115 1
/    Open branch from bus 73160 to bus 73382 ckt 1  /  73160 BALDWINB 115 73382 BALDWINB13.8 1
/ end
 Contingency '1575-1990-1'
    Open branch from bus 73164 to bus 73202 ckt 1  /  73164 BALDWNJA 115 73202 FROST BR 115 1
    Open branch from bus 73164 to bus 73186 ckt 1  /  73164 BALDWNJA 115 73186 BALDWINA 115 1
    Open branch from bus 73164 to bus 73333 ckt 1  /  73164 BALDWNJA 115 73333 JACKSHL  115 1
    Open branch from bus 73186 to bus 73386 ckt 1  /  73186 BALDWINA 115 73386 BALDWINA13.8 1
    Open branch from bus 73188 to bus 73130 ckt 1  /
    Open branch from bus 73130 to bus 73136 ckt 1  /
 end
 Contingency '1575-1990-2'
    Open branch from bus 73164 to bus 73202 ckt 1  /  73164 BALDWNJA 115 73202 FROST BR 115 1
    Open branch from bus 73164 to bus 73186 ckt 1  /  73164 BALDWNJA 115 73186 BALDWINA 115 1
    Open branch from bus 73164 to bus 73333 ckt 1  /  73164 BALDWNJA 115 73333 JACKSHL  115 1
```

This document may contain Critical Energy Infrastructure Information -Do Not Release

```
  Open branch from bus 73186 to bus 73386 ckt 1  /  73186 BALDWINA 115 73386 BALDWINA13.8 1
  Open branch from bus 73130 to bus 73228 ckt 1  /
  Open branch from bus 73130 to bus 73136 ckt 1  /
  Open branch from bus 73185 to bus 73228 ckt 1  /  73185 BUNKER H 115 73228 BALDWNJB 115 1
  Open branch from bus 73160 to bus 73228 ckt 1  /  73160 BALDWINB 115 73228 BALDWNJB 115 1
  Open branch from bus 73160 to bus 73382 ckt 1  /  73160 BALDWINB 115 73382 BALDWINB13.8 1
end
Contingency '1580-1585DC'
  Open branch from bus 73126 to bus 73199 ckt 1  /  73126 DEVON#2  115 73199 SO.NAUG  115 1
  Open branch from bus 73185 to bus 73199 ckt 1  /  73185 BUNKER H 115 73199 SO.NAUG  115 1
end
Contingency '1580-1730DCT'
  Open branch from bus 73126 to bus 73199 ckt 1  /  73126 DEVON#2  115 73199 SO.NAUG  115 1
  Open branch from bus 73224 to bus 73126 ckt 1  /  73224 TRMB1730 115 73126 DEVON#2  115 1
end
Contingency '1620-1975DCT'
  Open branch from bus 73230 to bus 73231 ckt 2  /  73230 HADDAM   115 73231 BOKUM    115 2
  Open branch from bus 73227 to bus 73230 ckt 1  /  73227 E.MERIDN 115 73230 HADDAM   115 1
end
Contingency '1622-1887DCT'
  Open branch from bus 73165 to bus 73178 ckt 1  /  73165 STONY HL 115 73178 SHEPAUG  115 1
  Open branch from bus 73165 to bus 73179 ckt 1  /  73165 STONY HL 115 73179 W.BRKFLD 115 1
  Open branch from bus 73159 to bus 73178 ckt 1  /  73159 BATES RK 115 73178 SHEPAUG  115 1
  Open branch from bus 73178 to bus 73341 ckt 1  /  73178 SHEPAUG  115 73341 SHEPAUG 69.0 1
end
Contingency '1637-1682DCT'
  Open branch from bus 73172 to bus 73296 ckt 1  /  73172 NORWALK  115 73296 WLTON115 115 1
  Open branch from bus 73296 to bus 73354 ckt 1  /  73296 WLTON115 115 73354 WLTON13813.8 1
  Open branch from bus 73158 to bus 73292 ckt 1  /  73158 WESTON   115 73292 NRWLK RX 115 1
  Open branch from bus 73172 to bus 73292 ckt 2  /  73172 NORWALK  115 73292 NRWLK RX 115 2
end
Contingency '1637-1720DCT'
  Open branch from bus 73158 to bus 73292 ckt 1  /  73158 WESTON   115 73292 NRWLK RX 115 1
  Open branch from bus 73172 to bus 73292 ckt 2  /  73172 NORWALK  115 73292 NRWLK RX 115 2
  Open branch from bus 73710 to bus 73172 ckt 1  /  73710 HAWTHORN 115 73172 NORWALK  115 1
end
Contingency '1668-1721DCT'
  Open branch from bus 73185 to bus 73189 ckt 1  /  73185 BUNKER H 115 73189 FREIGHT  115 1
  Open branch from bus 73189 to bus 73202 ckt 1  /  73189 FREIGHT  115 73202 FROST BR 115 1
end
Contingency '1670-1771DCT'
  Open branch from bus 73198 to bus 73206 ckt 1  /  73198 SOUTHGTN 115 73206 RES RD J 115 1
  Open branch from bus 73206 to bus 73243 ckt 1  /  73206 RES RD J 115 73243 BERLIN   115 1
  Open branch from bus 73206 to bus 73273 ckt 1  /  73206 RES RD J 115 73273 BLRKHIB  115 1
  Open branch from bus 73198 to bus 73243 ckt 1  /  73198 SOUTHGTN 115 73243 BERLIN   115 1
end
Contingency '1670-1830DCT'
  Open branch from bus 73198 to bus 73206 ckt 1  /  73198 SOUTHGTN 115 73206 RES RD J 115 1
  Open branch from bus 73206 to bus 73243 ckt 1  /  73206 RES RD J 115 73243 BERLIN   115 1
  Open branch from bus 73206 to bus 73273 ckt 1  /  73206 RES RD J 115 73273 BLRKHIB  115 1
  Open branch from bus 73198 to bus 73272 ckt 1  /  73198 SOUTHGTN 115 73272 BLRKHIA  115 1
end
Contingency '1682-1720DCT'
  Open branch from bus 73172 to bus 73296 ckt 1  /  73172 NORWALK  115 73296 WLTON115 115 1
  Open branch from bus 73296 to bus 73354 ckt 1  /  73296 WLTON115 115 73354 WLTON13813.8 1
  Open branch from bus 73710 to bus 73172 ckt 1  /  73710 HAWTHORN 115 73172 NORWALK  115 1
end
Contingency '1710-1730DCT'
  Open branch from bus 73225 to bus 73126 ckt 1  /  73225 TRMB1710 115 73126 DEVON#2  115 1
  Open branch from bus 73225 to bus 73700 ckt 1  /  73225 TRMB1710 115 73700 PEQUONIC 115 1
  Open branch from bus 73225 to bus 73709 ckt 1  /  73225 TRMB1710 115 73709 OLD TOWN 115 1
  Open branch from bus 73224 to bus 73126 ckt 1  /  73224 TRMB1730 115 73126 DEVON#2  115 1
end
Contingency '1720-1730DCT'
  Open branch from bus 73710 to bus 73172 ckt 1  /  73710 HAWTHORN 115 73172 NORWALK  115 1
  Open branch from bus 73224 to bus 73126 ckt 1  /  73224 TRMB1730 115 73126 DEVON#2  115 1
  Open branch from bus 73724 to bus 73158 ckt 1  /  73724 TRMB1714 115 73158 WESTON   115 1
end
Contingency '1732-1788DCT'
  Open branch from bus 73262 to bus 73263 ckt 1  /  73262 CANTON   115 73263 WEINGART 115 1
```

This document may contain Critical Energy Infrastructure Information -Do Not Release

```
  Open branch from bus 73260 to bus 73263 ckt 1  /  73260 FRKLN DR 115 73263 WEINGART 115 1
  Open branch from bus 73203 to bus 73263 ckt 1  /  73203 CAMPV PH 115 73263 WEINGART 115 1
  Open branch from bus 73245 to bus 73260 ckt 1  /  73245 TORR TER 115 73260 FRKLN DR 115 1
end
Contingency '1751-1777DCT'
  Open branch from bus 73244 to bus 73251 ckt 1  /  73244 N.BLMFLD 115 73251 BLM JCT  115 1
  Open branch from bus 73251 to bus 73261 ckt 1  /  73251 BLM JCT  115 73261 NW.HTFD  115 1
  Open branch from bus 73242 to bus 73251 ckt 1  /  73242 MANCHSTR 115 73251 BLM JCT  115 1
  Open branch from bus 73244 to bus 73258 ckt 1  /  73244 N.BLMFLD 115 73258 BLOOMFLD 115 1
end
Contingency '1770-1887DCT'
  Open branch from bus 73165 to bus 73178 ckt 1  /  73165 STONY HL 115 73178 SHEPAUG  115 1
  Open branch from bus 73165 to bus 73179 ckt 1  /  73165 STONY HL 115 73179 W.BRKFLD 115 1
  Open branch from bus 73165 to bus 73170 ckt 1  /  73165 STONY HL 115 73170 PLUMTREE 115 1
  Open branch from bus 73159 to bus 73165 ckt 1  /  73159 BATES RK 115 73165 STONY HL 115 1
end
Contingency '1771-1830DCT'
  Open branch from bus 73198 to bus 73243 ckt 1  /  73198 SOUTHGTN 115 73243 BERLIN   115 1
  Open branch from bus 73198 to bus 73272 ckt 1  /  73198 SOUTHGTN 115 73272 BLRKHIA  115 1
end
Contingency '1777-1779DCT'
  Open branch from bus 73244 to bus 73258 ckt 1  /  73244 N.BLMFLD 115 73258 BLOOMFLD 115 1
  Open branch from bus 73246 to bus 73258 ckt 1  /  73246 S.MEADOW 115 73258 BLOOMFLD 115 1
end
Contingency '1800-1810DCT'
  Open branch from bus 73154 to bus 73208 ckt 1  /  73154 SGTN B   115 73208 U.A.C.TP 115 1
  Open branch from bus 73148 to bus 73208 ckt 1  /  73148 U.A.C.   115 73208 U.A.C.TP 115 1
  Open branch from bus 73208 to bus 73232 ckt 1  /  73208 U.A.C.TP 115 73232 FORESTVL 115 1
  Open branch from bus 73233 to bus 73234 ckt 1  /  73233 BRISTOL  115 73234 CHIPP TP 115 1
  Open branch from bus 73234 to bus 73235 ckt 1  /  73234 CHIPP TP 115 73235 CHIP HIL 115 1
  Open branch from bus 73154 to bus 73234 ckt 1  /  73154 SGTN B   115 73234 CHIPP TP 115 1
end
Contingency '1800-1825DCT'
  Open branch from bus 73154 to bus 73208 ckt 1  /  73154 SGTN B   115 73208 U.A.C.TP 115 1
  Open branch from bus 73148 to bus 73208 ckt 1  /  73148 U.A.C.   115 73208 U.A.C.TP 115 1
  Open branch from bus 73208 to bus 73232 ckt 1  /  73208 U.A.C.TP 115 73232 FORESTVL 115 1
  Open branch from bus 73232 to bus 73233 ckt 1  /  73232 FORESTVL 115 73233 BRISTOL  115 1
end
Contingency '1810-1825DCT'
  Open branch from bus 73154 to bus 73234 ckt 1  /  73154 SGTN B   115 73234 CHIPP TP 115 1
  Open branch from bus 73233 to bus 73234 ckt 1  /  73233 BRISTOL  115 73234 CHIPP TP 115 1
  Open branch from bus 73234 to bus 73235 ckt 1  /  73234 CHIPP TP 115 73235 CHIP HIL 115 1
  Open branch from bus 73232 to bus 73233 ckt 1  /  73232 FORESTVL 115 73233 BRISTOL  115 1
end
Contingency '1867-1880DCT'
  Open branch from bus 73171 to bus 73271 ckt 1  /  73171 NWLK HAR 115 73271 RYTN J B 115 1
  Open branch from bus 73168 to bus 73271 ckt 1  /  73168 GLNBROOK 115 73271 RYTN J B 115 1
  Open branch from bus 73207 to bus 73271 ckt 1  /  73207 FLAX HIL 115 73271 RYTN J B 115 1
  Open branch from bus 73169 to bus 73172 ckt 1  /  73169 RYTN J A 115 73172 NORWALK  115 1
  Open branch from bus 73168 to bus 73169 ckt 1  /  73168 GLNBROOK 115 73169 RYTN J A 115 1
  Open branch from bus 73169 to bus 73171 ckt 1  /  73169 RYTN J A 115 73171 NWLK HAR 115 1
  Open branch from bus 73171 to bus 73552 ckt 1  /  73171 NWLK HAR 115 73552 NORHAR#220.0 1
end
Contingency '1867-1890DCT'
  Open branch from bus 73173 to bus 73237 ckt 1  /  73173 SASCO CR 115 73237 ELYAVE   115 1
  Open branch from bus 73168 to bus 73237 ckt 1  /  73168 GLNBROOK 115 73237 ELYAVE   115 1
  Open branch from bus 73171 to bus 73237 ckt 1  /  73171 NWLK HAR 115 73237 ELYAVE   115 1
  Open branch from bus 73207 to bus 73271 ckt 1  /  73207 FLAX HIL 115 73271 RYTN J B 115 1
  Open branch from bus 73168 to bus 73271 ckt 1  /  73168 GLNBROOK 115 73271 RYTN J B 115 1
  Open branch from bus 73171 to bus 73271 ckt 1  /  73171 NWLK HAR 115 73271 RYTN J B 115 1
  Open branch from bus 73171 to bus 73551 ckt 1  /  73171 NWLK HAR 115 73551 NORHAR#118.0 1
end
Contingency '1867-1977DCT'
  Open branch from bus 73168 to bus 73294 ckt 1  /  73168 GLNBROOK 115 73294 GLNBRK J 115 1
  Open branch from bus 73167 to bus 73294 ckt 1  /  73167 SO.END   115 73294 GLNBRK J 115 1
  Open branch from bus 73267 to bus 73294 ckt 1  /  73267 DARIEN   115 73294 GLNBRK J 115 1
  Open branch from bus 73207 to bus 73271 ckt 1  /  73207 FLAX HIL 115 73271 RYTN J B 115 1
  Open branch from bus 73168 to bus 73271 ckt 1  /  73168 GLNBROOK 115 73271 RYTN J B 115 1
  Open branch from bus 73171 to bus 73271 ckt 1  /  73171 NWLK HAR 115 73271 RYTN J B 115 1
end
```

This document may contain Critical Energy Infrastructure Information -Do Not Release

```
Contingency '1880-1890DCT'
  Open branch from bus 73169 to bus 73172 ckt 1  /  73169 RYTN J A 115 73172 NORWALK  115 1
  Open branch from bus 73168 to bus 73169 ckt 1  /  73168 GLNBROOK 115 73169 RYTN J A 115 1
  Open branch from bus 73169 to bus 73171 ckt 1  /  73169 RYTN J A 115 73171 NWLK HAR 115 1
  Open branch from bus 73171 to bus 73237 ckt 1  /  73171 NWLK HAR 115 73237 ELYAVE   115 1
  Open branch from bus 73168 to bus 73237 ckt 1  /  73168 GLNBROOK 115 73237 ELYAVE   115 1
  Open branch from bus 73173 to bus 73237 ckt 1  /  73173 SASCO CR 115 73237 ELYAVE   115 1
  Open branch from bus 73171 to bus 73552 ckt 1  /  73171 NWLK HAR 115 73552 NORHAR#220.0 1
end
Contingency '1880-1977DCT'
  Open branch from bus 73168 to bus 73294 ckt 1  /  73168 GLNBROOK 115 73294 GLNBRK J 115 1
  Open branch from bus 73167 to bus 73294 ckt 1  /  73167 SO.END   115 73294 GLNBRK J 115 1
  Open branch from bus 73267 to bus 73294 ckt 1  /  73267 DARIEN   115 73294 GLNBRK J 115 1
  Open branch from bus 73169 to bus 73172 ckt 1  /  73169 RYTN J A 115 73172 NORWALK  115 1
  Open branch from bus 73168 to bus 73169 ckt 1  /  73168 GLNBROOK 115 73169 RYTN J A 115 1
  Open branch from bus 73169 to bus 73171 ckt 1  /  73169 RYTN J A 115 73171 NWLK HAR 115 1
end
Contingency '1890-1977DCT'
  Open branch from bus 73168 to bus 73294 ckt 1  /  73168 GLNBROOK 115 73294 GLNBRK J 115 1
  Open branch from bus 73167 to bus 73294 ckt 1  /  73167 SO.END   115 73294 GLNBRK J 115 1
  Open branch from bus 73267 to bus 73294 ckt 1  /  73267 DARIEN   115 73294 GLNBRK J 115 1
  Open branch from bus 73173 to bus 73237 ckt 1  /  73173 SASCO CR 115 73237 ELYAVE   115 1
  Open branch from bus 73168 to bus 73237 ckt 1  /  73168 GLNBROOK 115 73237 ELYAVE   115 1
  Open branch from bus 73171 to bus 73237 ckt 1  /  73171 NWLK HAR 115 73237 ELYAVE   115 1
end
Contingency '8100-8200DCT'
  Open branch from bus 73669 to bus 73679 ckt 1  /  73669 GRAND AV 115 73679 ENG STA  115 1
  Open branch from bus 73668 to bus 73679 ckt 1  /  73668 E.SHORE  115 73679 ENG STA  115 1
  Open branch from bus 73668 to bus 73669 ckt 2  /  73668 E.SHORE  115 73669 GRAND AV 115 2
end
Contingency '1460-387DCT'
  Open branch from bus 73668 to bus 73287 ckt 1  /  73668 E.SHORE  115 73287 BRANF RR 115 1
  Open branch from bus 73664 to bus 73107 ckt 1  /  73664 CSC-HVDC 345 73107 SCOVL RK 345 1
  Open branch from bus 73663 to bus 73668 ckt 1  /  73663 E.SHORE  345 73668 E.SHORE  115 1
  Open branch from bus 73663 to bus 73668 ckt 2  /  73663 E.SHORE  345 73668 E.SHORE  115 2
  Open branch from bus 73663 to bus 73664 ckt 1  /  73663 E.SHORE  345 73664 CSC-HVDC 345 1
end
Contingency '1618-321DCT'
  Open branch from bus 73179 to bus 73190 ckt 1  /  73179 W.BRKFLD 115 73190 ROCK RIV 115 1
  Open branch from bus 73105 to bus 73115 ckt 1  /  73105 LONG MTN 345 73115 PLUMTREE 345 1
end
Contingency '1751-395SDCT'
  Open branch from bus 73103 to bus 73124 ckt 1  /  73103 MEEKVL J 345 73124 BHAUTO   345 1
  Open branch from bus 73103 to bus 73112 ckt 1  /  73103 MEEKVL J 345 73112 MANCHSTR 345 1
  Open branch from bus 73103 to bus 73111 ckt 1  /  73103 MEEKVL J 345 73111 NOBLMFLD 345 1
  Open branch from bus 73111 to bus 73244 ckt 1  /  73111 NOBLMFLD 345 73244 N.BLMFLD 115 1
  Open branch from bus 73244 to bus 73251 ckt 1  /  73244 N.BLMFLD 115 73251 BLM JCT  115 1
  Open branch from bus 73251 to bus 73261 ckt 1  /  73251 BLM JCT  115 73261 NW.HTFD  115 1
  Open branch from bus 73242 to bus 73251 ckt 1  /  73242 MANCHSTR 115 73251 BLM JCT  115 1
end
Contingency '1759-353DCT'
  Open branch from bus 73241 to bus 73264 ckt 1  /  73241 MIDDLTWN 115 73264 PORTLAND 115 1
  Open branch from bus 73259 to bus 73264 ckt 1  /  73259 HOPEWELL 115 73264 PORTLAND 115 1
  Open branch from bus 73112 to bus 73114 ckt 1  /  73112 MANCHSTR 345 73114 PORT JCT 345 1
  Open branch from bus 73114 to bus 73500 ckt 1  /  73114 PORT JCT 345 73500 KLEENTAP 345 1
  Open branch from bus 73112 to bus 73242 ckt 1  /  73112 MANCHSTR 345 73242 MANCHSTR 115 1
end
Contingency '1767-353DCT'
  Open branch from bus 73242 to bus 73259 ckt 1  /  73242 MANCHSTR 115 73259 HOPEWELL 115 1
  Open branch from bus 73112 to bus 73114 ckt 1  /  73112 MANCHSTR 345 73114 PORT JCT 345 1
  Open branch from bus 73114 to bus 73500 ckt 1  /  73114 PORT JCT 345 73500 KLEENTAP 345 1
  Open branch from bus 73112 to bus 73242 ckt 1  /  73112 MANCHSTR 345 73242 MANCHSTR 115 1
end
Contingency '1770-321DCT'
  Open branch from bus 73165 to bus 73170 ckt 1  /  73165 STONY HL 115 73170 PLUMTREE 115 1
  Open branch from bus 73159 to bus 73165 ckt 1  /  73159 BATES RK 115 73165 STONY HL 115 1
  Open branch from bus 73105 to bus 73115 ckt 1  /  73105 LONG MTN 345 73115 PLUMTREE 345 1
end
// modified by PTI 03/18/2007
Contingency '1770-321DCT1'
```

This document may contain Critical Energy Infrastructure Information -Do Not Release

```
  Open branch from bus 73165 to bus 73170 ckt 1  /  73165 STONY HL 115 73170 PLUMTREE 115 1
  Open branch from bus 73159 to bus 73165 ckt 1  /  73159 BATES RK 115 73165 STONY HL 115 1
  Open branch from bus 73583 to bus 73115 ckt 1  /  73583 NUTMEG 345 73115 PLUMTREE 345 1
end
Contingency '1770-321DCT2'
  Open branch from bus 73165 to bus 73170 ckt 1  /  73165 STONY HL 115 73170 PLUMTREE 115 1
  Open branch from bus 73159 to bus 73165 ckt 1  /  73159 BATES RK 115 73165 STONY HL 115 1
  Open branch from bus 73105 to bus 73583 ckt 1  /  73105 LONG MTN 345 73583 NUTMEG 345 1
end
Contingency '1779-395SDCT'
  Open branch from bus 73103 to bus 73124 ckt 1  /  73103 MEEKVL J 345 73124 BHAUTO   345 1
  Open branch from bus 73103 to bus 73112 ckt 1  /  73103 MEEKVL J 345 73112 MANCHSTR 345 1
  Open branch from bus 73103 to bus 73111 ckt 1  /  73103 MEEKVL J 345 73111 NOBLMFLD 345 1
  Open branch from bus 73111 to bus 73244 ckt 1  /  73111 NOBLMFLD 345 73244 N.BLMFLD 115 1
  Open branch from bus 73246 to bus 73258 ckt 1  /  73246 S.MEADOW 115 73258 BLOOMFLD 115 1
end
Contingency '1887-321DCT'
  Open branch from bus 73105 to bus 73115 ckt 1  /  73105 LONG MTN 345 73115 PLUMTREE 345 1
  Open branch from bus 73165 to bus 73178 ckt 1  /  73165 STONY HL 115 73178 SHEPAUG  115 1
  Open branch from bus 73165 to bus 73179 ckt 1  /  73165 STONY HL 115 73179 W.BRKFLD 115 1
end
// modified by PTI 03/18/2007
Contingency '310-348DCT'
  Open branch from bus 73110 to bus 73112 ckt 1  /  73110 MILLSTNE 345 73112 MANCHSTR 345 1
  Open branch from bus 73121 to bus 73230 ckt 1  /  73121 HADAUTO  345 73230 HADDAM   115 1
  Open branch from bus 73121 to bus 73295 ckt 1  /  73121 HADAUTO  345 73295 BESECK   345 1
  Open branch from bus 73110 to bus 73121 ckt 1  /  73110 MILLSTNE 345 73121 HADAUTO  345 1
end
Contingency '310-368DCT'
  Open branch from bus 73110 to bus 73112 ckt 1  /  73110 MILLSTNE 345 73112 MANCHSTR 345 1
  Open branch from bus 73108 to bus 73112 ckt 1  /  73108 CARD     345 73112 MANCHSTR 345 1
end
Contingency '310-383DCT'
  Open branch from bus 73108 to bus 73110 ckt 1  /  73108 CARD     345 73110 MILLSTNE 345 1
  Open branch from bus 73110 to bus 73112 ckt 1  /  73110 MILLSTNE 345 73112 MANCHSTR 345 1
end
Contingency '329-352DCT'
  Open branch from bus 73104 to bus 73105 ckt 1  /  73104 FRSTBDGE 345 73105 LONG MTN 345 1
  Open branch from bus 73104 to bus 73106 ckt 1  /  73104 FRSTBDGE 345 73106 SOUTHGTN 345 1
  Open branch from bus 73104 to bus 73202 ckt 1  /  73104 FRSTBDGE 345 73202 FROST BR 115 1
end
Contingency '371-383DCT'
  Open branch from bus 73108 to bus 73110 ckt 1  /  73108 CARD     345 73110 MILLSTNE 345 1
  Open branch from bus 73109 to bus 73110 ckt 1  /  73109 MONTVILE 345 73110 MILLSTNE 345 1
end
Contingency 'KILLIAUTO'
  Open branch from bus 73123 to bus 73304 ckt 1  /  73123 KILLINGL 345 73304 KILLINGL 115 1
end
Contingency 'MANCHAUTO1'
  Open branch from bus 73112 to bus 73242 ckt 1  /  73112 MANCHSTR 345 73242 MANCHSTR 115 1
end
Contingency 'PLUMAUT'
  Open branch from bus 73115 to bus 73170 ckt 1  /  73115 PLUMTREE 345 73170 PLUMTREE 115 1
end
Contingency 'SOUTH1XAUTO'
  Open branch from bus 73106 to bus 73198 ckt 1  /  73106 SOUTHGTN 345 73198 SOUTHGTN 115 1
end
Contingency 'SOUTH2XAUTO'
  Open branch from bus 73106 to bus 73154 ckt 2  /  73106 SOUTHGTN 345 73154 SGTN B   115 2
end
Contingency 'LOBPTENGF'
  Open branch from bus 73716 to bus 73301 ckt 1  /  73716 PEQBETAP 115 73301 SINGER   345 1
end
Contingency 'LOSSBPT3'
  Open branch from bus 73648 to bus 73700 ckt 1  /  73648 BPTHBR#322.0 73700 PEQUONIC 115 1
end
Contingency 'LOSSDEV7'
  Open branch from bus 73195 to bus 73553 ckt 1  /  73195 DEVON    115 73553 DEVON#7 13.8 1
end
Contingency 'LOLAKERD'
```

This document may contain Critical Energy Infrastructure Information -Do Not Release

```
  Open branch from bus 73119 to bus 73565 ckt 1  /  73119 LAKEROAD 345 73565 LAKERD#121.0 1
  Open branch from bus 73119 to bus 73566 ckt 1  /  73119 LAKEROAD 345 73566 LAKERD#221.0 1
  Open branch from bus 73119 to bus 73567 ckt 1  /  73119 LAKEROAD 345 73567 LAKERD#321.0 1
end
Contingency 'LOSSMID4'
  Open branch from bus 73116 to bus 73557 ckt 1  /  73116 MIDDLTWN 345 73557 MIDDTN#422.0 1
end
Contingency 'LOSSMP2'
  Open branch from bus 73110 to bus 73562 ckt 1  /  73110 MILLSTNE 345 73562 MILL#2  24.0 1
end
Contingency 'LOSSMP3'
  Open branch from bus 73110 to bus 73563 ckt 1  /  73110 MILLSTNE 345 73563 MILL#3  24.0 1
end
Contingency 'LOSSMON6'
  Open branch from bus 73210 to bus 73559 ckt 1  /  73210 MONTVLLE 115 73559 MONTV#6 22.0 1
end
Contingency 'LOSSNHAV'
  Open branch from bus 73651 to bus 73668 ckt 1  /  73651 NH HARBR22.0 73668 E.SHORE  115 1
end
Contingency 'LOSSNOR1'
  Open branch from bus 73171 to bus 73551 ckt 1  /  73171 NWLK HAR 115 73551 NORHAR#118.0 1
end
Contingency 'LOSSNOR2'
  Open branch from bus 73171 to bus 73552 ckt 1  /  73171 NWLK HAR 115 73552 NORHAR#220.0 1
end
Contingency 'CARD1TSTK'
  Open branch from bus 73108 to bus 73112 ckt 1  /  73108 CARD     345 73112 MANCHSTR 345 1
  Open branch from bus 73108 to bus 73119 ckt 1  /  73108 CARD     345 73119 LAKEROAD 345 1
  Open branch from bus 73108 to bus 73215 ckt 1  /  73108 CARD     345 73215 CARD     115 1
end
Contingency 'CARD3TSTK'
  Open branch from bus 73108 to bus 73110 ckt 1  /  73108 CARD     345 73110 MILLSTNE 345 1
  Open branch from bus 73108 to bus 73119 ckt 1  /  73108 CARD     345 73119 LAKEROAD 345 1
  Open branch from bus 73108 to bus 73215 ckt 1  /  73108 CARD     345 73215 CARD     115 1
end
Contingency 'LUDLW3TSTBKR'
  Open branch from bus 72925 to bus 73124 ckt 1  /  72925 LUDLOW   345 73124 BHAUTO   345 1
  Open branch from bus 72925 to bus 72929 ckt 1  /  72925 LUDLOW   345 72929 BELCH301 345 1
  Open branch from bus 72925 to bus 72972 ckt 1  /  72925 LUDLOW   345 72972 LUDLOW   115 1
  Open branch from bus 72929 to bus 71796 ckt 1  /  72929 BELCH301 345 71796 CARP HL  345 1
  Open branch from bus 71796 to bus 71797 ckt 1  /  71796 CARP HL  345 71797 MILLBURY 345 1
end
Contingency 'LUDLW5TBF'
  Open branch from bus 72925 to bus 72929 ckt 1  /  72925 LUDLOW   345 72929 BELCH301 345 1
  Open branch from bus 72925 to bus 72972 ckt 1  /  72925 LUDLOW   345 72972 LUDLOW   115 1
  Open branch from bus 72929 to bus 71796 ckt 1  /  72929 BELCH301 345 71796 CARP HL  345 1
  Open branch from bus 71796 to bus 71797 ckt 1  /  71796 CARP HL  345 71797 MILLBURY 345 1
  Open branch from bus 72925 to bus 72926 ckt 1  /  72925 LUDLOW   345 72926 NRTHFLD  345 1
end
Contingency 'LUDLW4TBF'
  Open branch from bus 72925 to bus 72972 ckt 2  /  72925 LUDLOW   345 72972 LUDLOW   115 2
  Open branch from bus 72925 to bus 72926 ckt 1  /  72925 LUDLOW   345 72926 NRTHFLD  345 1
end
Contingency 'LUDLW2TBF'
  Open branch from bus 72925 to bus 73124 ckt 1  /  72925 LUDLOW   345 73124 BHAUTO   345 1
  Open branch from bus 71551 to bus 72925 ckt 1  /  71551 STNY BRK 345 72925 LUDLOW   345 1
  Open branch from bus 71551 to bus 71581 ckt 1  /  71551 STNY BRK 345 71581 STNY_BRK 115 1
end
Contingency 'LUDLW1TBF'
  Open branch from bus 72925 to bus 72972 ckt 2  /  72925 LUDLOW   345 72972 LUDLOW   115 2
  Open branch from bus 71551 to bus 72925 ckt 1  /  71551 STNY BRK 345 72925 LUDLOW   345 1
  Open branch from bus 71551 to bus 71581 ckt 1  /  71551 STNY BRK 345 71581 STNY_BRK 115 1
end
Contingency 'MANCH21TSTK'
  Open branch from bus 73110 to bus 73112 ckt 1  /  73110 MILLSTNE 345 73112 MANCHSTR 345 1
  Open branch from bus 73103 to bus 73112 ckt 1  /  73103 MEEKVL J 345 73112 MANCHSTR 345 1
  Open branch from bus 73103 to bus 73124 ckt 1  /  73103 MEEKVL J 345 73124 BHAUTO   345 1
  Open branch from bus 73103 to bus 73111 ckt 1  /  73103 MEEKVL J 345 73111 NOBLMFLD 345 1
  Open branch from bus 73111 to bus 73244 ckt 1  /  73111 NOBLMFLD 345 73244 N.BLMFLD 115 1
end
```

This document may contain Critical Energy Infrastructure Information -Do Not Release

```
Contingency 'MONTVSTBKR'
  Open branch from bus 73109 to bus 73110 ckt 1  /  73109 MONTVILE 345 73110 MILLSTNE 345 1
  Open branch from bus 73109 to bus 73113 ckt 1  /  73109 MONTVILE 345 73113 HADDM NK 345 1
  Open branch from bus 73109 to bus 73210 ckt 1  /  73109 MONTVILE 345 73210 MONTVLLE 115 1
  Open branch from bus 73109 to bus 73210 ckt 2  /  73109 MONTVILE 345 73210 MONTVLLE 115 2
end
Contingency 'NOMNTSTBKR'
  Open branch from bus 72924 to bus 72926 ckt 1  /  72924 BERKSHRE 345 72926 NRTHFLD  345 1
  Open branch from bus 72924 to bus 72952 ckt 1  /  72924 BERKSHRE 345 72952 BERKSHIR 115 1
  Open branch from bus 72924 to bus 72928 ckt 1  /  72924 BERKSHRE 345 72928 MANY393  345 1
  Open branch from bus 78700 to bus 72928 ckt 1  /  78700 ALPS345  345 72928 MANY393  345 1
  Open branch from bus 72926 to bus 72927 ckt 1  /  72926 NRTHFLD  345 72927 MANH381  345 1
  Open branch from bus 70486 to bus 72927 ckt 1  /  70486 VTYNK345 345 72927 MANH381  345 1
end
Contingency 'NMSTBKREAC'
  Open branch from bus 72924 to bus 72926 ckt 1  /  72924 BERKSHRE 345 72926 NRTHFLD  345 1
  Open branch from bus 72924 to bus 72952 ckt 1  /  72924 BERKSHRE 345 72952 BERKSHIR 115 1
  Open branch from bus 72924 to bus 72928 ckt 1  /  72924 BERKSHRE 345 72928 MANY393  345 1
  Open branch from bus 78700 to bus 72928 ckt 1  /  78700 ALPS345  345 72928 MANY393  345 1
  Open branch from bus 72926 to bus 72927 ckt 1  /  72926 NRTHFLD  345 72927 MANH381  345 1
  Open branch from bus 70486 to bus 72927 ckt 1  /  70486 VTYNK345 345 72927 MANH381  345 1
  Open branch from bus 70508 to bus 70509 ckt 2  /  70508 SANDB115 115 70509 SB RCTOR 115 2
end
Contingency '1NORGLENCAB'
  Open branch from bus 73168 to bus 73172 ckt 1  /  73168 GLNBROOK 115 73172 NORWALK  115 1
end
Contingency '2NORGLENCAB'
  Open branch from bus 73168 to bus 73172 ckt 1  /  73168 GLNBROOK 115 73172 NORWALK  115 1
  Open branch from bus 73168 to bus 73172 ckt 2  /  73168 GLNBROOK 115 73172 NORWALK  115 2
end
Contingency 'PLUMTREESTK'
  Open branch from bus 73105 to bus 73115 ckt 1  /  73105 LONG MTN 345 73115 PLUMTREE 345 1
  Open branch from bus 73115 to bus 73170 ckt 1  /  73115 PLUMTREE 345 73170 PLUMTREE 115 1
end

Contingency '1565PLMNORDC'
  Open branch from bus 73155 to bus 73170 ckt 1  /  73155 RDGFLD J 115 73170 PLUMTREE 115 1
  Open branch from bus 73155 to bus 73174 ckt 1  /  73155 RDGFLD J 115 73174 PEACEABL 115 1
  Open branch from bus 73146 to bus 73155 ckt 1  /  73146 RDGEFLDB 115 73155 RDGFLD J 115 1
  Open branch from bus 73146 to bus 73372 ckt 1  /  73146 RDGEFLDB 115 73372 RDGEFLD 13.8 1
  Open branch from bus 73132 to bus 73133 ckt 2  /  73132 PLUMREAC 345 73133 PLUMUG   345 2
  Open branch from bus 73115 to bus 73132 ckt 1  /  73115 PLUMTREE 345 73132 PLUMREAC 345 1
  Open branch from bus 73133 to bus 73134 ckt 3  /  73133 PLUMUG   345 73134 NORUG    345 3
  Open branch from bus 73115 to bus 73133 ckt 1  /  73115 PLUMTREE 345 73133 PLUMUG   345 1
  Open branch from bus 73134 to bus 73135 ckt 2  /  73134 NORUG    345 73135 NOROH    345 2
  Open branch from bus 73134 to bus 73135 ckt 3  /  73134 NORUG    345 73135 NOROH    345 3
  Open branch from bus 73135 to bus 73293 ckt 3  /  73135 NOROH    345 73293 NORWALK  345 3
end
Contingency 'NORAUT'
  Open branch from bus 73172 to bus 73293 ckt 1  /  73172 NORWALK  115 73293 NORWALK  345 1
end
Contingency 'SCOVRK5TSTK'
  Open branch from bus 73116 to bus 73557 ckt 1  /  73116 MIDDLTWN 345 73557 MIDDTN#422.0 1
  Open branch from bus 73107 to bus 73116 ckt 1  /  73107 SCOVL RK 345 73116 MIDDLTWN 345 1
  Open branch from bus 73664 to bus 73107 ckt 1  /  73664 CSC-HVDC 345 73107 SCOVL RK 345 1
  Open branch from bus 73663 to bus 73668 ckt 1  /  73663 E.SHORE  345 73668 E.SHORE  115 1
  Open branch from bus 73663 to bus 73668 ckt 2  /  73663 E.SHORE  345 73668 E.SHORE  115 2
  Open branch from bus 73663 to bus 73664 ckt 1  /  73663 E.SHORE  345 73664 CSC-HVDC 345 1
end
/ Contingency 'SCOVRK8TSTK'
/   Open branch from bus 73107 to bus 73113 ckt 1  /  73107 SCOVL RK 345 73113 HADDM NK 345 1
/   Open branch from bus 73106 to bus 73107 ckt 1  /  73106 SOUTHGTN 345 73107 SCOVL RK 345 1
/   Open branch from bus 73106 to bus 73198 ckt 4  /  73106 SOUTHGTN 345 73198 SOUTHGTN 115 4
/ end
Contingency 'SCOVRK8TSTK'
  Open branch from bus 73107 to bus 73113 ckt 1  /  73107 SCOVL RK 345 73113 HADDM NK 345 1
  Open branch from bus 73106 to bus 73107 ckt 1  /  73106 SOUTHGTN 345 73107 SCOVL RK 345 1
end
Contingency 'SGTN1TSTK'
  Open branch from bus 73106 to bus 73295 ckt 1  /  73106 SOUTHGTN 345 73107 BESECK   345 1
```

This document may contain Critical Energy Infrastructure Information -Do Not Release

```
   Open branch from bus 73106 to bus 73198 ckt 4  /  73106 SOUTHGTN 345 73198 SOUTHGTN 115 4
   Open branch from bus 73106 to bus 73154 ckt 2  /  73106 SOUTHGTN 345 73154 SGTN B   115 2
 end
/ Contingency 'SGTN3TSTK'
/    Open branch from bus 73122 to bus 73588 ckt 1  /  73122 MERID362 345 73588 MERIDEN121.0 1
/    Open branch from bus 73122 to bus 73589 ckt 1  /  73122 MERID362 345 73589 MERIDEN221.0 1
/    Open branch from bus 73122 to bus 73590 ckt 1  /  73122 MERID362 345 73590 MERIDEN321.0 1
/    Open branch from bus 73122 to bus 73107 ckt 1  /  73122 MERID362 345 73107 SCOVIL   345 1
/    Open branch from bus 73106 to bus 73122 ckt 1  /  73106 SOUTHGTN 345 73122 MERID362 345 1
/    Open branch from bus 73106 to bus 73154 ckt 2  /  73106 SOUTHGTN 345 73154 SGTN B   115 2
/ end
 Contingency 'SGTN3TSTK'
   Open branch from bus 73106 to bus 73107 ckt 1  /  73106 SOUTHGTN 345 73107 SCOVIL   345 1
   Open branch from bus 73106 to bus 73154 ckt 2  /  73106 SOUTHGTN 345 73154 SGTN B   115 2
 end
/ Contingency 'SGTN4TSTK'
/    Open branch from bus 73122 to bus 73588 ckt 1  /  73122 MERID362 345 73588 MERIDEN121.0 1
/    Open branch from bus 73122 to bus 73589 ckt 1  /  73122 MERID362 345 73589 MERIDEN221.0 1
/    Open branch from bus 73122 to bus 73590 ckt 1  /  73122 MERID362 345 73590 MERIDEN321.0 1
/    Open branch from bus 73122 to bus 73107 ckt 1  /  73122 MERID362 345 73107 SCOVIL   345 1
/    Open branch from bus 73106 to bus 73122 ckt 1  /  73106 SOUTHGTN 345 73122 MERID362 345 1
/    Open branch from bus 73104 to bus 73106 ckt 1  /  73104 FRSTBDGE 345 73106 SOUTHGTN 345 1
/ end
 Contingency 'SGTN4TSTK'
   Open branch from bus 73106 to bus 73107 ckt 1  /  73106 SOUTHGTN 345 73107 SCOVIL   345 1
   Open branch from bus 73104 to bus 73106 ckt 1  /  73104 FRSTBDGE 345 73106 SOUTHGTN 345 1
 end
 Contingency 'SGTN6TSTK'
   Open branch from bus 73106 to bus 73198 ckt 1  /  73106 SOUTHGTN 345 73198 SOUTHGTN 115 1
   Open branch from bus 73106 to bus 73154 ckt 3  /  73106 SOUTHGTN 345 73154 SGTN B   115 3
 end
 Contingency 'SGTN7TSTK'
   Open branch from bus 73106 to bus 73295 ckt 1  /  73106 SOUTHGTN 345 73295 BESECK   345 1
   Open branch from bus 73106 to bus 73198 ckt 1  /  73106 SOUTHGTN 345 73198 SOUTHGTN 115 1
   Open branch from bus 73106 to bus 73198 ckt 4  /  73106 SOUTHGTN 345 73198 SOUTHGTN 115 4
 end
 Contingency '3754LINE'
   Open branch from bus 73106 to bus 73295 ckt 1  /  73106 SOUTHGTN 345 73107 BESECK   345 1
   Open branch from bus 73106 to bus 73198 ckt 4  /  73106 SOUTHGTN 345 73198 SOUTHGTN 115 4
 end
 Contingency '3041LINE'
   Open branch from bus 73106 to bus 73107 ckt 1  /  73106 SOUTHGTN 345 73107 SCOVL RK 345 1
 end
/ Contingency '3041'
/    Open branch from bus 73122 to bus 73107 ckt 1  /  73122 MERID362 345 73295 SCOVL RK 345 1
/    Open branch from bus 73106 to bus 73122 ckt 1  /  73106 SOUTHGTN 345 73122 MERID362 345 1
/ end
 Contingency 'BSCK_HADMNC'
   Open branch from bus 73113 to bus 73295 ckt 1  /  73113 HADDM NK 345 73295 BESECK   345 1
 end
 Contingency '1466-3754DCT'
   Open branch from bus 73227 to bus 73633 ckt 1  /  73227 E.MERIDN 115 73633 NO.WALLF 115 1
   Open branch from bus 73106 to bus 73295 ckt 1  /  73106 SOUTHGTN 345 73107 BESECK   345 1
   Open branch from bus 73106 to bus 73198 ckt 4  /  73106 SOUTHGTN 345 73198 SOUTHGTN 115 4
 end
 Contingency '1975-3754DCT'
   Open branch from bus 73227 to bus 73230 ckt 1  /  73227 E.MERIDN 115 73230 HADDAM   115 1
   Open branch from bus 73106 to bus 73295 ckt 1  /  73106 SOUTHGTN 345 73107 BESECK   345 1
   Open branch from bus 73106 to bus 73198 ckt 4  /  73106 SOUTHGTN 345 73198 SOUTHGTN 115 4
 end
 Contingency '3198-376DCT'
   Open branch from bus 73113 to bus 73295 ckt 1  /  73113 HADDM NK 345 73295 BESECK   345 1
   Open branch from bus 73107 to bus 73113 ckt 1  /  73107 SCOVL RK 345 73113 HADDM NK 345 1
 end
/ Contingency '318-362'
/    Open branch from bus 73122 to bus 73588 ckt 1  /  73122 MERID362 345 73588 MERIDEN121.0 1
/    Open branch from bus 73122 to bus 73589 ckt 1  /  73122 MERID362 345 73589 MERIDEN221.0 1
/    Open branch from bus 73122 to bus 73590 ckt 1  /  73122 MERID362 345 73590 MERIDEN321.0 1
/    Open branch from bus 73122 to bus 73107 ckt 1  /  73122 MERID362 345 73295 SCOVL RK 345 1
/    Open branch from bus 73106 to bus 73122 ckt 1  /  73106 SOUTHGTN 345 73122 MERID362 345 1
```

This document may contain Critical Energy Infrastructure Information -Do Not Release

```
/ end
 Contingency 'DEVN_SNG_SGL'
   Open branch from bus 73310 to bus 73312 ckt 1  /  73310 DEVSING1 345 73312 SINGDEV1 345 1
   Open branch from bus 73297 to bus 73310 ckt 1  /  73297 E.DEVON  345 73310 DEVSING1 345 1
   Open branch from bus 73301 to bus 73312 ckt 1  /  73301 SINGER   345 73312 SINGDEV1 345 1
 end
 Contingency 'NOR_SNG_SGL'
   Open branch from bus 73314 to bus 73316 ckt 1  /  73314 SINGNOR1 345 73316 NORSING1 345 1
   Open branch from bus 73301 to bus 73314 ckt 1  /  73301 SINGER   345 73314 SINGNOR1 345 1
   Open branch from bus 73293 to bus 73316 ckt 1  /  73293 NORWALK  345 73316 NORSING1 345 1
 end
 // name modified by PTI 03/18/2007
 Contingency 'DVNSNG_SGL2'
   Open branch from bus 73311 to bus 73313 ckt 1  /  73311 DEVSING2 345 73313 SINGDEV2 345 1
   Open branch from bus 73297 to bus 73311 ckt 1  /  73297 E.DEVON  345 73311 DEVSING2 345 1
   Open branch from bus 73301 to bus 73313 ckt 1  /  73301 SINGER   345 73313 SINGDEV2 345 1
 end
 Contingency 'NORSNG_SGL2'
   Open branch from bus 73315 to bus 73317 ckt 1  /  73315 SINGNOR2 345 73317 NORSING2 345 1
   Open branch from bus 73301 to bus 73315 ckt 1  /  73301 SINGER   345 73315 SINGNOR2 345 1
   Open branch from bus 73293 to bus 73317 ckt 1  /  73293 NORWALK  345 73317 NORSING2 345 1
 end
  Contingency 'SNG_BF1'
   Open branch from bus 73314 to bus 73316 ckt 1  /  73314 SINGNOR1 345 73316 NORSING1 345 1
   Open branch from bus 73301 to bus 73314 ckt 1  /  73301 PEQUONNO 345 73314 SINGNOR1 345 1
   Open branch from bus 73293 to bus 73316 ckt 1  /  73293 NORWALK  345 73316 NORSING1 345 1
   Open branch from bus 73310 to bus 73312 ckt 1  /  73310 DEVSING1 345 73312 SINGDEV1 345 1
   Open branch from bus 73297 to bus 73310 ckt 1  /  73297 DEVON    345 73310 DEVSING1 345 1
   Open branch from bus 73301 to bus 73312 ckt 1  /  73301 PEQUONNO 345 73312 SINGDEV1 345 1
 end
 Contingency 'SNG_BF2'
   Open branch from bus 73315 to bus 73317 ckt 1  /  73315 SINGNOR2 345 73317 NORSING2 345 1
   Open branch from bus 73301 to bus 73315 ckt 1  /  73301 PEQUONNO 345 73315 SINGNOR2 345 1
   Open branch from bus 73293 to bus 73317 ckt 1  /  73293 NORWALK  345 73317 NORSING2 345 1
   Open branch from bus 73311 to bus 73313 ckt 1  /  73311 DEVSING2 345 73313 SINGDEV2 345 1
   Open branch from bus 73297 to bus 73311 ckt 1  /  73297 DEVON    345 73311 DEVSING2 345 1
   Open branch from bus 73301 to bus 73313 ckt 1  /  73301 PEQUONNO 345 73313 SINGDEV2 345 1
 end
 Contingency 'PEQUONAUTO'
   Open branch from bus 73301 to bus 73700 ckt 1  /  73301 SINGER   345 73700 PEQUONIC 115 1
 end
 Contingency 'SING_BF3'
   Open branch from bus 73301 to bus 73700 ckt 1  /  73301 SINGER   345 73700 PEQUONIC 115 1
   Open branch from bus 73301 to bus 73598 ckt 1  /  73301 SINGER   345 73598 BRGPTII   18 1
   Open branch from bus 73301 to bus 73599 ckt 1  /  73301 SINGER   345 73599 BRGPTII   18 1
 end
 Contingency 'DEVONAUTO'
   Open branch from bus 73297 to bus 73129 ckt 1  /  73297 E.DEVON  345 73129 E.DEVONJ 115 1
 end
 Contingency 'LINE3029'
   Open branch from bus 73297 to bus 73295 ckt 1  /  73297 E.DEVON  345 73295 BESECK   345 1
 end
 Contingency 'BESEC_STK1'
   Open branch from bus 73297 to bus 73295 ckt 1  /  73297 E.DEVON  345 73295 BESECK   345 1
   Open branch from bus 73113 to bus 73295 ckt 1  /  73113 HADDM NK 345 73295 BESECK   345 1
 end
 Contingency 'BSCK_HADAUTO'
   Open branch from bus 73121 to bus 73230 ckt 1  /  73121 HADAUTO  345 73230 HADDAM   115 1
   Open branch from bus 73121 to bus 73295 ckt 1  /  73121 HADAUTO  345 73295 BESECK   345 1
   Open branch from bus 73110 to bus 73121 ckt 1  /  73110 MILLSTNE 345 73121 HADAUTO  345 1
 end
 Contingency '1208-3029DCT'
   Open branch from bus 73198 to bus 73631 ckt 1  /  73198 SOUTHGTN 115 73631 WLNGFD   115 1
   Open branch from bus 73297 to bus 73295 ckt 1  /  73297 E.DEVON  345 73295 BESECK   345 1
 end
 Contingency '1640-3029DCT'
   Open branch from bus 73195 to bus 73631 ckt 1  /  73195 DEVON    115 73631 WLNGFD   115 1
   Open branch from bus 73297 to bus 73295 ckt 1  /  73297 E.DEVON  345 73295 BESECK   345 1
 end
 Contingency '1610-3029DCT'
```

This document may contain Critical Energy Infrastructure Information -Do Not Release

```
   Open branch from bus 73196 to bus 73198 ckt 1  /  73196 GLEN JCT 115 73198 SOUTHGTN 115 1
   Open branch from bus 73675 to bus 73196 ckt 1  /  73675 MIX AVE  115 73196 GLEN JCT 115 1
   Open branch from bus 73707 to bus 73196 ckt 1  /  73707 JUNE ST  115 73196 GLEN JCT 115 1
   Open branch from bus 73297 to bus 73295 ckt 1  /  73297 E.DEVON  345 73295 BESECK   345 1
 end
 Contingency '1655-3029DCT'
   Open branch from bus 73671 to bus 73153 ckt 1  /  73671 NO.HAVEN 115 73153 BRANFORD 115 1
   Open branch from bus 73297 to bus 73295 ckt 1  /  73297 E.DEVON  345 73295 BESECK   345 1
 end
/ Contingency '1975-362DCT'
/    Open branch from bus 73227 to bus 73230 ckt 1  /  73227 E.MERIDN 115 73230 HADDAM   115 1
/    Open branch from bus 73122 to bus 73588 ckt 1  /  73122 MERID362 345 73588 MERIDEN121.0 1
/    Open branch from bus 73122 to bus 73589 ckt 1  /  73122 MERID362 345 73589 MERIDEN221.0 1
/    Open branch from bus 73122 to bus 73590 ckt 1  /  73122 MERID362 345 73590 MERIDEN321.0 1
/    Open branch from bus 73122 to bus 73107 ckt 1  /  73122 MERID362 345 73107 SCOVL RK 345 1
/    Open branch from bus 73106 to bus 73122 ckt 1  /  73106 SOUTHGTN 345 73122 MERID362 345 1
/ end
 Contingency 'E_DEVONSTK'
   Open branch from bus 73297 to bus 73295 ckt 1  /  73297 E.DEVON  345 73295 BESECK   345 1
   Open branch from bus 73297 to bus 73129 ckt 1  /  73297 E.DEVON  345 73129 E.DEVONJ 115 1
 end
 Contingency 'HADNK2TSTK'
   Open branch from bus 73109 to bus 73113 ckt 1  /  73109 MONTVILE 345 73113 HADDM NK 345 1
   Open branch from bus 73113 to bus 73295 ckt 1  /  73113 HADDM NK 345 73295 BESECK   345 1
 end
 Contingency 'NORWLK5TSTK'
   Open branch from bus 73168 to bus 73172 ckt 1  /  73168 GLNBROOK 115 73172 NORWALK  115 1
   Open branch from bus 73172 to bus 73296 ckt 1  /  73172 NORWALK  115 73296 WLTON115 115 1
   Open branch from bus 73296 to bus 73354 ckt 1  /  73296 WLTON115 115 73354 WLTON13813.8 1
 end
 Contingency 'WILTON1TSTK'
   Open branch from bus 73296 to bus 73354 ckt 1  /  73296 WLTON115 115 73354 WLTON13813.8 1
   Open branch from bus 73296 to bus 73354 ckt 2  /  73296 WLTON115 115 73354 WLTON13813.8 2
   Open branch from bus 73296 to bus 73139 ckt 1  /  73296 WLTON115 115 73139 PT3260   115 1
   Open branch from bus 73172 to bus 73296 ckt 1  /  73172 NORWALK  115 73296 WLTON115 115 1
   Open branch from bus 73143 to bus 73174 ckt 1  /  73143 RDGEFLDA 115 73174 PEACEABL 115 1
   Open branch from bus 73143 to bus 73372 ckt 1  /  73143 RDGEFLDA 115 73372 RDGEFLD 13.8 1
   Open branch from bus 73143 to bus 73139 ckt 1  /  73143 RDGEFLDA 115 73139 PT3260   115 1
 end
 Contingency '1713LINE'
   Open branch from bus 73723 to bus 73700 ckt 1  /  Added by Siemens per ISO-NE instructions
 end
 Contingency '1485LINE'
    Open branch from bus 73129 to bus 73195 ckt 1
  end
  Contingency '1497LINE'
    Open branch from bus 73126 to bus 73129 ckt 1
  end
CONTINGENCY 393_312
DISCONNECT BUS 72924
END

CONTINGENCY 3403LINE
DISCONNECT BUS 73132
DISCONNECT BUS 73133
DISCONNECT BUS 73134
DISCONNECT BUS 73135
END

 //Added or Updated 12/08/06 PTI
   Contingency '1508E'
    Open branch from bus 73265 to bus 73334 ckt 1  /
    Open branch from bus 73265 to bus 73404 ckt 1  /
  end
   Contingency '1508W'
    Disconnect bus 73101
    Open branch from bus 73334 to bus 73153 ckt 1  /
    Open branch from bus 73153 to bus 73403 ckt 1  / 73185 BUNKER H 115 73228 BALDWNJB 115 1
  end
   //Added or Updated 01/30/07 PTI
```

This document may contain Critical Energy Infrastructure Information -Do Not Release

```
CONTINGENCY 'BOKUM2T'
OPEN LINE FROM BUS 73230 TO BUS 73231 CKT 2
OPEN LINE FROM BUS 73231 TO BUS 73265 CKT 1
END

CONTINGENCY 'BRANFORD1T'
OPEN LINE FROM BUS 73153 TO BUS 73334 CKT 1
OPEN LINE FROM BUS 73334 TO BUS 73101 CKT 1
OPEN LINE FROM BUS 73153 TO BUS 73671 CKT 1
OPEN LINE FROM BUS 73102 TO BUS 73671 CKT 1
END

CONTINGENCY 'BRANFORD2T'
OPEN LINE FROM BUS 73153 TO BUS 73671 CKT 1
OPEN LINE FROM BUS 73102 TO BUS 73671 CKT 1
OPEN LINE FROM BUS 73287 TO BUS 73153 CKT 1
END

CONTINGENCY 'BRANFORD3T'
OPEN LINE FROM BUS 73287 TO BUS 73153 CKT 1
OPEN LINE FROM BUS 73153 TO BUS 73334 CKT 1
OPEN LINE FROM BUS 73334 TO BUS 73101 CKT 1
END

CONTINGENCY 'BRANFRDRR1T'
OPEN LINE FROM BUS 73287 TO BUS 73153 CKT 1
OPEN LINE FROM BUS 73287 TO BUS 73668 CKT 1
END
// Added 02/12/2007 PTI
CONTINGENCY 1620-1975DCT
OPEN LINE FROM BUS 73241 TO BUS 73230 CKT 1
OPEN LINE FROM BUS 73227 TO BUS 73230 CKT 1
END

CONTINGENCY BOKUM2T
OPEN LINE FROM BUS 73230 TO BUS 73231 CKT 2
OPEN LINE FROM BUS 73231 TO BUS 73265 CKT 1
END

CONTINGENCY BRANFORD1T
OPEN LINE FROM BUS 73153 TO BUS 73334 CKT 1
OPEN LINE FROM BUS 73334 TO BUS 73101 CKT 1
OPEN LINE FROM BUS 73153 TO BUS 73671 CKT 1
OPEN LINE FROM BUS 73102 TO BUS 73671 CKT 1
END

CONTINGENCY BRANFORD2T
OPEN LINE FROM BUS 73153 TO BUS 73671 CKT 1
OPEN LINE FROM BUS 73102 TO BUS 73671 CKT 1
OPEN LINE FROM BUS 73287 TO BUS 73153 CKT 1
END

CONTINGENCY BRANFORD3T
OPEN LINE FROM BUS 73287 TO BUS 73153 CKT 1
OPEN LINE FROM BUS 73153 TO BUS 73334 CKT 1
OPEN LINE FROM BUS 73334 TO BUS 73101 CKT 1
END

CONTINGENCY BRANFRDRR1T
OPEN LINE FROM BUS 73287 TO BUS 73153 CKT 1
OPEN LINE FROM BUS 73287 TO BUS 73668 CKT 1
END
// Added 02/14/2007 added by PTI due to Nutmeg project
// modified by PTI 03/18/2007
// NUTMEG 345kV OPTION
// These are the post-Nutmeg (345 option) contingencies in the 321 Line corridor.
// Results for these contingencies will have to be explicitly reported because these
// contingencies don't exist in the pre project system
// The pre-project contingencies affected by the Nutmeg 345kV option are:
// 321Line, 1618-321DCT, 1770-321DCT, 1887-321DCT and PLUMTREESTK. Replace them with those listed below
```

This document may contain Critical Energy Infrastructure Information -Do Not Release

```
// the new contingencies are:

// 321 North section cons
/----------------------------
 Contingency '321LINE-N'
    Open branch from bus 73105 to bus 73583 ckt 1  /  73105 LONG MTN 345 73583 NUTMEG 345 1
 end
 Contingency '1618-321N-DC'
    Open branch from bus 73179 to bus 73190 ckt 1  /  73179 W.BRKFLD 115 73190 ROCK RIV 115 1
    Open branch from bus 73583 to bus 73105 ckt 1  /  Nutmeg to Long Mt.
 end
 Contingency '1887-321N-DC'
    Open branch from bus 73165 to bus 73178 ckt 1  /  73165 STONY HL 115 73178 SHEPAUG  115 1
    Open branch from bus 73165 to bus 73179 ckt 1  /  73165 STONY HL 115 73179 W.BRKFLD 115 1
    Open branch from bus 73583 to bus 73105 ckt 1  /  Nutmeg to Long Mt.
 end


// 321 south section cons
/----------------------------
 Contingency '321LINE-S'
    Open branch from bus 73583 to bus 73115 ckt 1  /  73583 NUTMEG 345 73115 PLUMTREE 345 1
 end
 Contingency '1770-321S-DC'
    Open branch from bus 73165 to bus 73170 ckt 1  /  73165 STONY HL 115 73170 PLUMTREE 115 1
    Open branch from bus 73159 to bus 73165 ckt 1  /  73159 BATES RK 115 73165 STONY HL 115 1
    Open branch from bus 73583 to bus 73115 ckt 1  /  73583 NUTMEG 345 73115 PLUMTREE 345 1
 end
 Contingency 'PLUMTREESTK1'
    Open branch from bus 73115 to bus 73170 ckt 1  /  73115 PLUMTREE 345 73170 PLUMTREE 115 1
    Open branch from bus 73583 to bus 73115 ckt 1  /  73583 NUTMEG 345 73115 PLUMTREE 345 1
 end


// New Breaker failure cons
/--------------------------
 Contingency 'NUTMEG1TSTK'
   Open branch from bus 73105 to bus 73583 ckt 1  /  73105 LONG MTN 345 73583 NUTMEG 345 1
   Open branch from bus 73583 to bus 73581 ckt 1  /  73583 NUTMEG 345 73581 NUTMEGTX12 115 1
 end
 Contingency 'NUTMEG2TSTK'
   Open branch from bus 73105 to bus 73583 ckt 1  /  73105 LONG MTN 345 73583 NUTMEG 345 1
   Open branch from bus 73583 to bus 73582 ckt 1  /  73583 NUTMEG 345 73582 NUTMEGTX34 115 1
 end
 Contingency 'NUTMEG3TSTK'
   Open branch from bus 73583 to bus 73115 ckt 1  /  73583 NUTMEG 345 73115 PLUMTREE 345 1
   Open branch from bus 73583 to bus 73581 ckt 1  /  73583 NUTMEG 345 73581 NUTMEGTX12 115 1
 end
 Contingency 'NUTMEG4TSTK'
   Open branch from bus 73583 to bus 73115 ckt 1  /  73583 NUTMEG 345 73115 PLUMTREE 345 1
   Open branch from bus 73583 to bus 73582 ckt 1  /  73583 NUTMEG 345 73582 NUTMEGTX34 115 1
 end

// transformers
/--------------
 Contingency 'NUTMEGTX12'
    Open branch from bus 73583 to bus 73581 ckt 1  /  73583 NUTMEG 345 73581 PLUMTREE 115 1
 end
 Contingency 'NUTMEGTX34'
    Open branch from bus 73583 to bus 73582 ckt 1  /  73583 NUTMEG 345 73582 PLUMTREE 115 1
 end



// I included these contingencies earlier, but they're probably not valid. You can ignore them at this time

/ Contingency '1770-321DCT2'
/    Open branch from bus 73165 to bus 73170 ckt 1  /  73165 STONY HL 115 73170 PLUMTREE 115 1
/    Open branch from bus 73159 to bus 73165 ckt 1  /  73159 BATES RK 115 73165 STONY HL 115 1
```

This document may contain Critical Energy Infrastructure Information -Do Not Release

```
/    Open branch from bus 73105 to bus 73583 ckt 1  /  73105 LONG MTN 345 73583 NUTMEG 345 1
/ end

/ Contingency '1887-321DCT2'
/    Open branch from bus 73165 to bus 73178 ckt 1  /  73165 STONY HL 115 73178 SHEPAUG  115 1
/    Open branch from bus 73165 to bus 73179 ckt 1  /  73165 STONY HL 115 73179 W.BRKFLD 115 1
/    Open branch from bus 73583 to bus 73115 ckt 1  /  73583 NUTMEG 345 73115 PLUMTREE 345 1
/ end

//-------------------------added as per Kwame e-mail 03/13/07
 Contingency '3348LINE'
    Open branch from bus 73123 to bus 73304 ckt 1  /  73123 KILLINGL 345 73304 KILLINGL 115 1
    Open branch from bus 73119 to bus 73123 ckt 1  /  73119 LAKEROAD 345 73123 KILLINGL 345 1
 end
 Contingency '347LINE'
    Open branch from bus 73118 to bus 71336 ckt 1  /  73118 CTRI347  345 71336 SHERMAN  345 1
    Open branch from bus 73118 to bus 73123 ckt 1  /  73118 CTRI347  345 73123 KILLINGL 345 1
 end
 Contingency 'LKRD2TSTK'
    Open branch from bus 73119 to bus 73565 ckt 1  /  73119 LAKEROAD 345 73565 LAKERD#121.0 1
    Open branch from bus 73123 to bus 73304 ckt 1  /  73123 KILLINGL 345 73304 KILLINGL 115 1
    Open branch from bus 73119 to bus 73123 ckt 1  /  73119 LAKEROAD 345 73123 KILLINGL 345 1
 end
 Contingency 'LKRD8TSTK'
    Open branch from bus 73108 to bus 73119 ckt 1  /  73108 CARD     345 73119 LAKEROAD 345 1
    Open branch from bus 73119 to bus 73567 ckt 1  /  73119 LAKEROAD 345 73567 LAKERD#321.0 1
 end
 //============================FROM OCTAVIO 03/26/07
 //following contingencies were added in BEII project

  Contingency 'DEVN_SNG_SG2'
    Open branch from bus 73311 to bus 73313 ckt 1  /  73311 DEVSING2 345 73313 SINGDEV2 345 1
    Open branch from bus 73297 to bus 73311 ckt 1  /  73297 E.DEVON  345 73311 DEVSING2 345 1
    Open branch from bus 73301 to bus 73313 ckt 1  /  73301 SINGER   345 73313 SINGDEV2 345 1
 end
  Contingency 'NOR_SNG_SGL2'
    Open branch from bus 73315 to bus 73317 ckt 1  /  73315 SINGNOR2 345 73317 NORSING2 345 1
    Open branch from bus 73301 to bus 73315 ckt 1  /  73301 SINGER   345 73315 SINGNOR2 345 1
    Open branch from bus 73293 to bus 73317 ckt 1  /  73293 NORWALK  345 73317 NORSING2 345 1
 end
  Contingency 'SNG_BF1'
    Open branch from bus 73314 to bus 73316 ckt 1  /  73314 SINGNOR1 345 73316 NORSING1 345 1
    Open branch from bus 73301 to bus 73314 ckt 1  /  73301 PEQUONNO 345 73314 SINGNOR1 345 1
    Open branch from bus 73293 to bus 73316 ckt 1  /  73293 NORWALK  345 73316 NORSING1 345 1
    Open branch from bus 73310 to bus 73312 ckt 1  /  73310 DEVSING1 345 73312 SINGDEV1 345 1
    Open branch from bus 73297 to bus 73310 ckt 1  /  73297 DEVON    345 73310 DEVSING1 345 1
    Open branch from bus 73301 to bus 73312 ckt 1  /  73301 PEQUONNO 345 73312 SINGDEV1 345 1
 end
 Contingency 'SNG_BF2'
    Open branch from bus 73315 to bus 73317 ckt 1  /  73315 SINGNOR2 345 73317 NORSING2 345 1
    Open branch from bus 73301 to bus 73315 ckt 1  /  73301 PEQUONNO 345 73315 SINGNOR2 345 1
    Open branch from bus 73293 to bus 73317 ckt 1  /  73293 NORWALK  345 73317 NORSING2 345 1
    Open branch from bus 73311 to bus 73313 ckt 1  /  73311 DEVSING2 345 73313 SINGDEV2 345 1
    Open branch from bus 73297 to bus 73311 ckt 1  /  73297 DEVON    345 73311 DEVSING2 345 1
    Open branch from bus 73301 to bus 73313 ckt 1  /  73301 PEQUONNO 345 73313 SINGDEV2 345 1
 end
 Contingency 'PEQUONAUTO'
    Open branch from bus 73301 to bus 73700 ckt 1  /  73301 SINGER   345 73700 PEQUONIC 115 1
 end
 Contingency 'SING_BF3'
    Open branch from bus 73301 to bus 73700 ckt 1  /  73301 SINGER   345 73700 PEQUONIC 115 1
    Open branch from bus 73301 to bus 73598 ckt 1  /  73301 SINGER   345 73598 BRGPTII   18 1
    Open branch from bus 73301 to bus 73599 ckt 1  /  73301 SINGER   345 73599 BRGPTII   18 1
 end
 Contingency 'DEVONAUTO'
    Open branch from bus 73297 to bus 73129 ckt 1  /  73297 E.DEVON  345 73129 E.DEVONJ 115 1
 end

 Contingency '1713LINE'
    Open branch from bus 73723 to bus 73700 ckt 1  /  Added by Siemens per ISO-NE instructions
```

```
 end
  Contingency '1485LINE'
    Open branch from bus 73129 to bus 73195 ckt 1
  end
  Contingency '1497LINE'
    Open branch from bus 73126 to bus 73129 ckt 1
  end

CONTINGENCY BOKUM2T                          /added by ISONE-1-29-07
OPEN LINE FROM BUS 73230 TO BUS 73231 CKT 2          /added by ISONE-1-29-07
OPEN LINE FROM BUS 73231 TO BUS 73265 CKT 1          /added by ISONE-1-29-07
END                                          /added by ISONE-1-29-07
                                        /added by ISONE-1-29-07
CONTINGENCY BRANFORD1T                       /added by ISONE-1-29-07
OPEN LINE FROM BUS 73153 TO BUS 73334 CKT 1          /added by ISONE-1-29-07
OPEN LINE FROM BUS 73334 TO BUS 73101 CKT 1          /added by ISONE-1-29-07
OPEN LINE FROM BUS 73153 TO BUS 73671 CKT 1          /added by ISONE-1-29-07
OPEN LINE FROM BUS 73102 TO BUS 73671 CKT 1          /added by ISONE-1-29-07
END                                          /added by ISONE-1-29-07
                                        /added by ISONE-1-29-07
CONTINGENCY BRANFORD2T                       /added by ISONE-1-29-07
OPEN LINE FROM BUS 73153 TO BUS 73671 CKT 1          /added by ISONE-1-29-07
OPEN LINE FROM BUS 73102 TO BUS 73671 CKT 1          /added by ISONE-1-29-07
OPEN LINE FROM BUS 73287 TO BUS 73153 CKT 1          /added by ISONE-1-29-07
END                                          /added by ISONE-1-29-07
                                        /added by ISONE-1-29-07
CONTINGENCY BRANFORD3T                       /added by ISONE-1-29-07
OPEN LINE FROM BUS 73287 TO BUS 73153 CKT 1          /added by ISONE-1-29-07
OPEN LINE FROM BUS 73153 TO BUS 73334 CKT 1          /added by ISONE-1-29-07
OPEN LINE FROM BUS 73334 TO BUS 73101 CKT 1          /added by ISONE-1-29-07
END                                          /added by ISONE-1-29-07
                                        /added by ISONE-1-29-07
CONTINGENCY BRANFRDRR1T                      /added by ISONE-1-29-07
OPEN LINE FROM BUS 73287 TO BUS 73153 CKT 1          /added by ISONE-1-29-07
OPEN LINE FROM BUS 73287 TO BUS 73668 CKT 1          /added by ISONE-1-29-07
END                                          /added by ISONE-1-29-07

CONTINGENCY 'LOSSPLFLD'
OPEN LINE FROM BUS 73290 TO BUS 73597 CKT 1
END

CONTINGENCY 'LOSSMIDTWN11'
OPEN LINE FROM BUS 73302 TO BUS 73241 CKT 1
END

CONTINGENCY 'LOSSMID12-13'
OPEN LINE FROM BUS 73307 TO BUS 73116 CKT 1
OPEN LINE FROM BUS 73308 TO BUS 73116 CKT 1
END

CONTINGENCY 'LOSSBEII'
OPEN LINE FROM BUS 73598 TO BUS 73301 CKT 1
OPEN LINE FROM BUS 73599 TO BUS 73301 CKT 1
END

CONTINGENCY 'LOSSKLEEN'
OPEN LINE FROM BUS 73560 TO BUS 73577 CKT 1
OPEN LINE FROM BUS 73561 TO BUS 73577 CKT 1
END

CONTINGENCY 'LOSSPIERCE'
OPEN LINE FROM BUS 73635 TO BUS 73631 CKT 1
END

CONTINGENCY 'LOSSCMEEC'
OPEN LINE FROM BUS 73780 TO BUS 73772 CKT 2
END

CONTINGENCY 'LOSSNHBR345'
OPEN LINE FROM BUS 73788 TO BUS 73593 CKT 3
```

This document may contain Critical Energy Infrastructure Information -Do Not Release

```
OPEN LINE FROM BUS 73789 TO BUS 73593 CKT 4
OPEN LINE FROM BUS 73790 TO BUS 73593 CKT 5
END

CONTINGENCY 'LOSSCOSCOB'
OPEN LINE FROM BUS 73800 TO BUS 73163 CKT 1
END

CONTINGENCY 'LOSSEXETER'
OPEN LINE FROM BUS 138 TO BUS 73281 CKT 1
END

CONTINGENCY 3403LINE
DISCONNECT BUS 73132
DISCONNECT BUS 73133
DISCONNECT BUS 73134
DISCONNECT BUS 73135
END

CONTINGENCY 393_312
DISCONNECT BUS 72924
end
// As already discussed, the Nutmeg project interconnects by tapping existing lines, unlike the ...
// ... others that interconnect directly at existing buses. Most of the post-project contingencies ...
// ... therefore have no corresponding pre-project counterparts. Please keep this in mind when ...
// ... processing the study results: there will be no direct comparison between pre and post project ...
// ... impact for these contngencies.
//
// These are the affected pre-Nutmeg contingencies in the 321 Line corridor. These are in the base (pre-project) list that
you already have.

 Contingency '321LINE'
   Open branch from bus 73105 to bus 73115 ckt 1  /  73105 LONG MTN 345 73115 PLUMTREE 345 1
 end
 Contingency '1770LINE'
   Open branch from bus 73165 to bus 73170 ckt 1  /  73165 STONY HL 115 73170 PLUMTREE 115 1
   Open branch from bus 73159 to bus 73165 ckt 1  /  73159 BATES RK 115 73165 STONY HL 115 1
 end
 Contingency '1618-321DCT'
   Open branch from bus 73179 to bus 73190 ckt 1  /  73179 W.BRKFLD 115 73190 ROCK RIV 115 1
   Open branch from bus 73115 to bus 73105 ckt 1  /  Plumtree345 to Long Mt. 345
 end
 Contingency '1770-321DCT'
   Open branch from bus 73165 to bus 73170 ckt 1  /  73165 STONY HL 115 73170 PLUMTREE 115 1
   Open branch from bus 73159 to bus 73165 ckt 1  /  73159 BATES RK 115 73165 STONY HL 115 1
   Open branch from bus 73115 to bus 73105 ckt 1  /  Plumtree345 to Long Mt. 345
 end
 Contingency '1887-321DCT'
   Open branch from bus 73165 to bus 73178 ckt 1  /  73165 STONY HL 115 73178 SHEPAUG  115 1
   Open branch from bus 73165 to bus 73179 ckt 1  /  73165 STONY HL 115 73179 W.BRKFLD 115 1
   Open branch from bus 73115 to bus 73105 ckt 1  /  Plumtree345 to Long Mt. 345
 end
 Contingency '1770-1887DCT'
   Open branch from bus 73165 to bus 73178 ckt 1  /  73165 STONY HL 115 73178 SHEPAUG  115 1
   Open branch from bus 73165 to bus 73179 ckt 1  /  73165 STONY HL 115 73179 W.BRKFLD 115 1
   Open branch from bus 73165 to bus 73170 ckt 1  /  73165 STONY HL 115 73170 PLUMTREE 115 1
   Open branch from bus 73159 to bus 73165 ckt 1  /  73159 BATES RK 115 73165 STONY HL 115 1
 end
 Contingency 'PLUMTREESTK'
   Open branch from bus 73105 to bus 73115 ckt 1  /  73105 LONG MTN 345 73115 PLUMTREE 345 1
   Open branch from bus 73115 to bus 73170 ckt 1  /  73115 PLUMTREE 345 73170 PLUMTREE 115 1
 end

//-------------------------added as per Kwame e-mail 07/10/07
 Contingency 'SGTN5TSTK'
    Open branch from bus 73104 to bus 73106 ckt 1  /  73104 FRSTBDGE 345 73106 SOUTHGTN 345 1
    Open branch from bus 73106 to bus 73154 ckt 3  /  73106 SOUTHGTN 345 73154 SGTN B   115 3
  end

  Contingency 'SGTN5TSTKSPS'
```

```
    Open branch from bus 73104 to bus 73106 ckt 1  /  73104 FRSTBDGE 345 73106 SOUTHGTN 345 1
    Open branch from bus 73106 to bus 73154 ckt 3  /  73106 SOUTHGTN 345 73154 SGTN B   115 3
    Close branch from bus 73198 to bus 73154 ckt 1 /  73198 SOUTHGTN 115 73154 STNG B  115 1
 end
 Contingency 'SGTN5TSTK-A'
   Open branch from bus 73127 to bus 73154 ckt 1  /  73127 SGTNB RX 115 73154 SGTN B   115 1
   Open branch from bus 73104 to bus 73106 ckt 1  /  73104 FRSTBDGE 345 73106 SOUTHGTN 345 1
   Open branch from bus 73106 to bus 73154 ckt 3  /  73106 SOUTHGTN 345 73154 SGTN B   115 3
end
//as per kwame 07/19/07
Contingency '113091001DC'
   Open branch from bus 73701 to bus 73702 ckt 1  /  73701 CRRA JCT 115 73702 CRRA XFO 115 1
   Open branch from bus 73700 to bus 73701 ckt 1  /  73700 PEQUONIC 115 73701 CRRA JCT 115 1
   Open branch from bus 73701 to bus 73703 ckt 1  /  73701 CRRA JCT 115 73703 ASHCREEK 115 1
   Open branch from bus 73700 to bus 73286 ckt 1  /  73700 PEQUONIC 115 73286 COMPO    115 1
end
Contingency '113091001SP'
   Open branch from bus 73701 to bus 73702 ckt 1  /  73701 CRRA JCT 115 73702 CRRA XFO 115 1
   Open branch from bus 73700 to bus 73701 ckt 1  /  73700 PEQUONIC 115 73701 CRRA JCT 115 1
   Open branch from bus 73701 to bus 73703 ckt 1  /  73701 CRRA JCT 115 73703 ASHCREEK 115 1
   Open branch from bus 73700 to bus 73286 ckt 1  /  73700 PEQUONIC 115 73286 COMPO    115 1
   Set      bus 73648 generation to     150.0 MW    /  73648 BPTHBR#322.0
end
Contingency '1130-1430DC'
   Open branch from bus 73700 to bus 73286 ckt 1  /  73700 PEQUONIC 115 73286 COMPO    115 1
   Open branch from bus 73714 to bus 73173 ckt 1  /  73714 ASHCREAC 115 73173 SASCO CR 115 1
   Open branch from bus 73703 to bus 73714 ckt 1  /  73703 ASHCREEK 115 73714 ASHCREAC 115 1
end
Contingency '1130-1430SP'
   Open branch from bus 73700 to bus 73286 ckt 1  /  73700 PEQUONIC 115 73286 COMPO    115 1
   Open branch from bus 73714 to bus 73173 ckt 1  /  73714 ASHCREAC 115 73173 SASCO CR 115 1
   Open branch from bus 73703 to bus 73714 ckt 1  /  73703 ASHCREEK 115 73714 ASHCREAC 115 1
   Set      bus 73648 generation to     150.0 MW    /  73648 BPTHBR#322.0
end
Contingency '1416-1890DC'
   Open branch from bus 73173 to bus 73237 ckt 1  /  73173 SASCO CR 115 73237 ELYAVE   115 1
   Open branch from bus 73168 to bus 73237 ckt 1  /  73168 GLNBROOK 115 73237 ELYAVE   115 1
   Open branch from bus 73171 to bus 73237 ckt 1  /  73171 NWLK HAR 115 73237 ELYAVE   115 1
   Open branch from bus 73267 to bus 73300 ckt 1  /  73267 DARIEN   115 73300 ELYTAP   115 1
   Open branch from bus 73286 to bus 73300 ckt 1  /  73286 COMPO    115 73300 ELYTAP   115 1
end
Contingency '1416-1890SP'
   Open branch from bus 73173 to bus 73237 ckt 1  /  73173 SASCO CR 115 73237 ELYAVE   115 1
   Open branch from bus 73168 to bus 73237 ckt 1  /  73168 GLNBROOK 115 73237 ELYAVE   115 1
   Open branch from bus 73171 to bus 73237 ckt 1  /  73171 NWLK HAR 115 73237 ELYAVE   115 1
   Open branch from bus 73267 to bus 73300 ckt 1  /  73267 DARIEN   115 73300 ELYTAP   115 1
   Open branch from bus 73286 to bus 73300 ckt 1  /  73286 COMPO    115 73300 ELYTAP   115 1
   Set      bus 73648 generation to     150.0 MW    /  73648 BPTHBR#322.0
end
// Added 07/19/2007 added by PTI due to Stevenson project
Contingency 'STVNS-STB2'  /LOSS OF stvns GSU
   Open branch from bus 73164 to bus 73202 ckt 1  /  73164 BALDWNJA 115 73202 FROST BR 115 1
   Open branch from bus 73164 to bus 73186 ckt 1  /  73164 BALDWNJA 115 73186 BALDWINA 115 1
   Open branch from bus 73164 to bus 73333 ckt 1  /  73164 BALDWNJA 115 73333 JACKSHL  115 1
   Open branch from bus 73186 to bus 73386 ckt 1  /  73186 BALDWINA 115 73386 BALDWINA13.8 1
END
Contingency 'STVNS-STB3'
   Open branch from bus 73187 to bus 73282 ckt 1  /  73187 STEVENSN 115 73282 SNDYHK   115 1
   Open branch from bus 73194 to bus 73282 ckt 1  /  73194 NEWTOWN  115 73282 SNDYHK   115 1
   Open branch from bus 73704 to bus 73191 ckt 1  /  73704 TRAP FLS 115 73191 DRBY J A 115 1
   Open branch from bus 73187 to bus 73191 ckt 1  /  73187 STEVENSN 115 73191 DRBY J A 115 1
   Open branch from bus 73706 to bus 73191 ckt 1  /  73706 ANSONIA  115 73191 DRBY J A 115 1
end
Contingency 'STVNS-STB4'
   Open branch from bus 73704 to bus 73191 ckt 1  /  73704 TRAP FLS 115 73191 DRBY J A 115 1
   Open branch from bus 73187 to bus 73191 ckt 1  /  73187 STEVENSN 115 73191 DRBY J A 115 1
   Open branch from bus 73706 to bus 73191 ckt 1  /  73706 ANSONIA  115 73191 DRBY J A 115 1
   Open branch from bus 73164 to bus 73202 ckt 1  /  73164 BALDWNJA 115 73202 FROST BR 115 1
   Open branch from bus 73164 to bus 73186 ckt 1  /  73164 BALDWNJA 115 73186 BALDWINA 115 1
   Open branch from bus 73164 to bus 73333 ckt 1  /  73164 BALDWNJA 115 73333 JACKSHL  115 1
```

This document may contain Critical Energy Infrastructure Information -Do Not Release

```
   Open branch from bus 73186 to bus 73386 ckt 1  /  73186 BALDWINA 115 73386 BALDWINA13.8 1
 end
// Added 08/07/2007 added by PTI due to Watertown Biomass project//////////////////////////////////////////////////////////////////////////////////////////////
 Contingency '1238LINE-E'
   Open branch from bus 91001 to bus 73202 ckt 1  /  91001 WATERTOWN 115 73202 FROST BR 115 1
 end
  Contingency '1238LINE-W'
   Open branch from bus 73180 to bus 91001 ckt 1  /  73180 CARMHILL 115 91001 WATERTOWN 115 1
 end

 Contingency '1238+1813LN1'
   Open branch from bus 73180 to bus 91001 ckt 1  /  73180 CARMHILL 115 91001 WATERTOWN 115 1
   Open branch from bus 73180 to bus 73190 ckt 1  /  73180 CARMHILL 115 73190 ROCK RIV 115 1
 end

 Contingency '1191LINE-NEW'
   Open branch from bus 73202 to bus 91001 ckt 1  /  73202 FROST BR 115 - 91001 WATERTOWN - 73203 CAMPV PH
115 1
   Open branch from bus 91001 to bus 73203 ckt 1
 end

//  Added by PTI on 08/16/2007. DCT Updates Provided by ISO-NE ////////////////////////////////////////////////////////////////////////////////
  Contingency '1714LINE'   //** new
   Open branch from bus 73158 to bus 73724 ckt 1  /  73158 WESTON   115 73724 TRMB1714 115 1
 end
 Contingency '8804ALINE'  //** revised
   Open branch from bus 73684 to bus 73686 ckt 1  /  73684 ALLINGSA 115 73686 WDMONT A 115 1
   Open branch from bus 73684 to bus 73744 ckt 1  /  73684 ALLINGSA 115 73744 ALLINGS 13.8 1
end
 Contingency '8809ALINE'  //** revised
   Open branch from bus 73696 to bus 73700 ckt 1  /  73696 CONGRESA 115 73700 PEQUONIC 115 1
   Open branch from bus 73712 to bus 73696 ckt 1  /  73712 CNGRES2A 115 73696 CONGRESA 115 1
   Open branch from bus 73694 to bus 73712 ckt 1  /  73694 BAIRD A  115 73712 CNGRES2A 115 1
   Open branch from bus 73696 to bus 73756 ckt 1  /  73696 CONGRESA 115 73756 CONGRES113.8 1
   Open branch from bus 73712 to bus 73755 ckt 1  /  73712 CNGRES2A 115 73755 CONGRES213.8 1
end
 Contingency '8904BLINE'  //** revised
   Open branch from bus 73685 to bus 73687 ckt 1  /  73685 ALLINGSB 115 73687 WDMONT B 115 1
   Open branch from bus 73685 to bus 73744 ckt 1  /  73685 ALLINGSB 115 73744 ALLINGS 13.8 1
 end
 Contingency '8909BLINE'  //** revised
   Open branch from bus 73697 to bus 73700 ckt 1  /  73697 CONGRESB 115 73700 PEQUONIC 115 1
   Open branch from bus 73713 to bus 73697 ckt 1  /  73713 CNGRES2B 115 73697 CONGRESB 115 1
   Open branch from bus 73695 to bus 73713 ckt 1  /  73695 BAIRD B  115 73713 CNGRES2B 115 1
   Open branch from bus 73697 to bus 73756 ckt 1  /  73697 CONGRESB 115 73756 CONGRES113.8 1
   Open branch from bus 73713 to bus 73755 ckt 1  /  73713 CNGRES2B 115 73755 CONGRES213.8 1
 end
Contingency '88005ALINE'  //** revised
   Open branch from bus 73195 to bus 73690 ckt 1  /  73195 DEVON    115 73690 DEVON178 115 1
   Open branch from bus 73688 to bus 73690 ckt 1  /  73688 MILVON A 115 73690 DEVON178 115 1
   Open branch from bus 73686 to bus 73688 ckt 1  /  73686 WDMONT A 115 73688 MILVON A 115 1
   Open branch from bus 73688 to bus 73748 ckt 1  /  73688 MILVON A 115 73748 MILVON  13.8 1
   Open branch from bus 73686 to bus 73746 ckt 1  /  73686 WDMONT A 115 73746 WOODMONT13.8 1
 end
  Contingency '89005BLINE'  //** revised
   Open branch from bus 73689 to bus 73691 ckt 1  /  73689 MILVON B 115 73691 DEVON179 115 1
   Open branch from bus 73687 to bus 73689 ckt 1  /  73687 WDMONT B 115 73689 MILVON B 115 1
   Open branch from bus 73689 to bus 73748 ckt 1  /  73689 MILVON B 115 73748 MILVON  13.8 1
   Open branch from bus 73687 to bus 73746 ckt 1  /  73687 WDMONT B 115 73746 WOODMONT13.8 1
 end
Contingency '1560-1594DCT'  //** new
   Open branch from bus 73191 to bus 73704 ckt 1  /  73191 DRBY J A 115 73704 TRAP FLS 115 1
   Open branch from bus 73187 to bus 73191 ckt 1  /  73187 STEVENSN 115 73191 DRBY J A 115 1
   Open branch from bus 73191 to bus 73706 ckt 1  /  73191 DRBY J A 115 73706 ANSONIA  115 1
   Open branch from bus 73706 to bus 73705 ckt 1  /  73706 ANSONIA  115 73705 IND.WELL 115 1
 end
Contingency '1610-1685DCT'  //** new
   Open branch from bus 73196 to bus 73198 ckt 1  /  73196 GLEN JCT 115 73198 SOUTHGTN 115 1
   Open branch from bus 73196 to bus 73675 ckt 1  /  73196 GLEN JCT 115 73675 MIX AVE  115 1
   Open branch from bus 73196 to bus 73707 ckt 1  /  73196 GLEN JCT 115 73707 JUNE ST  115 1
```

This document may contain Critical Energy Infrastructure Information -Do Not Release

```
   Open branch from bus 73195 to bus 73707 ckt 1  /  73195 DEVON    115 73707 JUNE ST  115 1
 end
Contingency '1630-1655DCT'   //** new
   Open branch from bus 73631 to bus 73632 ckt 1  /  73631 WLNGF PF 115 73632 WALLFRDJ 115 1
   Open branch from bus 73632 to bus 73671 ckt 1  /  73632 WALLFRDJ 115 73671 NO.HAVEN 115 1
   Open branch from bus 73153 to bus 73671 ckt 1  /  73153 BRANFORD 115 73671 NO.HAVEN 115 1
   Open branch from bus 73102 to bus 73671 ckt 1  /  73102 N.HAVCAP 115 73671 NO.HAVEN 115 1
   Open branch from bus 73671 to bus 73731 ckt 1  /  73671 NO.HAVEN 115 73731 NO.HAVEN13.8 1
 end
 Contingency '1710-1714DC'  //** new
   Open branch from bus 73225 to bus 73700 ckt 1  /  73225 TRMB J B 115 73700 PEQUONIC 115 2
   Open branch from bus 73225 to bus 73709 ckt 1  /  73225 TRMB J B 115 73709 OLD TOWN 115 1
   Open branch from bus 73126 to bus 73225 ckt 1  /  73126 DEVON#2  115 73225 TRMB J B 115 1
   Open branch from bus 73158 to bus 73724 ckt 1  /  73158 WESTON   115 73724 TRMB1714 115 1
 end
  Contingency '1710-1697DC'   //** new
   Open branch from bus 73225 to bus 73700 ckt 1  /  73225 TRMB J B 115 73700 PEQUONIC 115 2
   Open branch from bus 73225 to bus 73709 ckt 1  /  73225 TRMB J B 115 73709 OLD TOWN 115 1
   Open branch from bus 73126 to bus 73225 ckt 1  /  73126 DEVON#2  115 73225 TRMB J B 115 1
   Open branch from bus 73723 to bus 73700 ckt 1  /  73723 TRMB1697 115 73700 PEQUONIC 115 1
 end
 Contingency '1720-1714DC'   //** new
   Open branch from bus 73172 to bus 73710 ckt 1  /  73172 NORWALK  115 73710 HAWTHORN 115 1
   Open branch from bus 73158 to bus 73724 ckt 1  /  73158 WESTON   115 73724 TRMB1714 115 1
 end
Contingency '8300-8400DCT'  //** new
   Open branch from bus 73670 to bus 73676 ckt 1  /  73670 QUINNIP  115 73676 MILL RVR 115 1
   Open branch from bus 73669 to bus 73672 ckt 1  /  73669 GRAND AV 115 73672 SACKETT  115 1
 end
Contingency '8300-8600DCT' //** new
   Open branch from bus 73670 to bus 73676 ckt 1  /  73670 QUINNIP  115 73676 MILL RVR 115 1
   Open branch from bus 73670 to bus 73671 ckt 1  /  73670 QUINNIP  115 73671 NO.HAVEN 115 1
 end
Contingency '8400-8600DCT' //** new
   Open branch from bus 73669 to bus 73672 ckt 1  /  73669 GRAND AV 115 73672 SACKETT  115 1
   Open branch from bus 73670 to bus 73671 ckt 1  /  73670 QUINNIP  115 73671 NO.HAVEN 115 1
 end
Contingency '8003A-9003B' //** new
   Open branch from bus 73669 to bus 73681 ckt 1  /  73669 GRAND AV 115 73681 WEST RIV 115 1
   Open branch from bus 73681 to bus 73682 ckt 1  /  73681 WEST RIV 115 73682 ELMWST A 115 1
   Open branch from bus 73682 to bus 73684 ckt 1  /  73682 ELMWST A 115 73684 ALLINGSA 115 1
   Open branch from bus 73682 to bus 73742 ckt 1  /  73682 ELMWST A 115 73742 ELMWEST 13.8 1
   Open branch from bus 73669 to bus 73681 ckt 2  /  73669 GRAND AV 115 73681 WEST RIV 115 2
   Open branch from bus 73681 to bus 73683 ckt 1  /  73681 WEST RIV 115 73683 ELMWST B 115 1
   Open branch from bus 73683 to bus 73685 ckt 1  /  73683 ELMWST B 115 73685 ALLINGSB 115 1
   Open branch from bus 73683 to bus 73742 ckt 1  /  73683 ELMWST B 115 73742 ELMWEST 13.8 1
 end
Contingency '8005A-9005B' //** new
   Open branch from bus 73195 to bus 73690 ckt 1  /  73195 DEVON    115 73690 DEVON178 115 1
   Open branch from bus 73688 to bus 73690 ckt 1  /  73688 MILVON A 115 73690 DEVON178 115 1
   Open branch from bus 73686 to bus 73688 ckt 1  /  73686 WDMONT A 115 73688 MILVON A 115 1
   Open branch from bus 73688 to bus 73748 ckt 1  /  73688 MILVON A 115 73748 MILVON  13.8 1
   Open branch from bus 73686 to bus 73746 ckt 1  /  73686 WDMONT A 115 73746 WOODMONT13.8 1
   Open branch from bus 73689 to bus 73691 ckt 1  /  73689 MILVON B 115 73691 DEVON179 115 1
   Open branch from bus 73687 to bus 73689 ckt 1  /  73687 WDMONT B 115 73689 MILVON B 115 1
   Open branch from bus 73689 to bus 73748 ckt 1  /  73689 MILVON B 115 73748 MILVON  13.8 1
   Open branch from bus 73687 to bus 73746 ckt 1  /  73687 WDMONT B 115 73746 WOODMONT13.8 1
 end
Contingency '8006A-9006B' //** new
   Open branch from bus 73690 to bus 73692 ckt 1  /  73690 DEVON178 115 73692 BARNUM A 115 1
   Open branch from bus 73692 to bus 73694 ckt 1  /  73692 BARNUM A 115 73694 BAIRD A  115 1
   Open branch from bus 73694 to bus 73754 ckt 1  /  73694 BAIRD A  115 73754 BAIRD   13.8 1
   Open branch from bus 73692 to bus 73752 ckt 1  /  73692 BARNUM A 115 73752 BARNUM  13.8 1
   Open branch from bus 73691 to bus 73693 ckt 1  /  73691 DEVON179 115 73693 BARNUM B 115 1
   Open branch from bus 73693 to bus 73695 ckt 1  /  73693 BARNUM B 115 73695 BAIRD B  115 1
   Open branch from bus 73195 to bus 73691 ckt 1  /  73195 DEVON    115 73691 DEVON179 115 1
   Open branch from bus 73693 to bus 73752 ckt 1  /  73693 BARNUM B 115 73752 BARNUM  13.8 1
   Open branch from bus 73695 to bus 73754 ckt 1  /  73695 BAIRD B  115 73754 BAIRD   13.8 1
 end
Contingency '8804A-8904BD' //** new
```

This document may contain Critical Energy Infrastructure Information -Do Not Release

```
   Open branch from bus 73684 to bus 73686 ckt 1  /  73684 ALLINGSA 115 73686 WDMONT A 115 1
   Open branch from bus 73684 to bus 73744 ckt 1  /  73684 ALLINGSA 115 73744 ALLINGS 13.8 1
   Open branch from bus 73685 to bus 73687 ckt 1  /  73685 ALLINGSB 115 73687 WDMONT B 115 1
   Open branch from bus 73685 to bus 73744 ckt 1  /  73685 ALLINGSB 115 73744 ALLINGS 13.8 1
end
Contingency '8809A-8909BD' //** new
   Open branch from bus 73696 to bus 73700 ckt 1  /  73696 CONGRESA 115 73700 PEQUONIC 115 1
   Open branch from bus 73712 to bus 73696 ckt 1  /  73712 CNGRES2A 115 73696 CONGRESA 115 1
   Open branch from bus 73694 to bus 73712 ckt 1  /  73694 BAIRD A  115 73712 CNGRES2A 115 1
   Open branch from bus 73696 to bus 73756 ckt 1  /  73696 CONGRESA 115 73756 CONGRES113.8 1
   Open branch from bus 73712 to bus 73755 ckt 1  /  73712 CNGRES2A 115 73755 CONGRES213.8 1
   Open branch from bus 73697 to bus 73700 ckt 1  /  73697 CONGRESB 115 73700 PEQUONIC 115 1
   Open branch from bus 73713 to bus 73697 ckt 1  /  73713 CNGRES2B 115 73697 CONGRESB 115 1
   Open branch from bus 73695 to bus 73713 ckt 1  /  73695 BAIRD B  115 73713 CNGRES2B 115 1
   Open branch from bus 73697 to bus 73756 ckt 1  /  73697 CONGRESB 115 73756 CONGRES113.8 1
   Open branch from bus 73713 to bus 73755 ckt 1  /  73713 CNGRES2B 115 73755 CONGRES213.8 1
end
 Contingency 'GALES_STK'
   Open branch from bus 73343 to bus 73344 ckt 1  /  73343 GALESF A69.0 73344 MONTVLLE69.0 1
   Open branch from bus 73343 to bus 73433 ckt 1  /  73343 GALESF A69.0 73433 GALES FY13.8 1
   Open branch from bus 73343 to bus 73345 ckt 1  /  73343 GALESF A69.0 73345 LEDYARDJ69.0 1
   Open branch from bus 73343 to bus 73433 ckt 2  /  73343 GALESF A69.0 73433 GALES FY13.8 2
   Open branch from bus 73345 to bus 73615 ckt 1  /  73345 LEDYARDJ69.0 73615 BUDDGTN 69.0 1
   Open branch from bus 73345 to bus 73617 ckt 1  /  73345 LEDYARDJ69.0 73617 TUNNEL  69.0 1
 end
 Contingency '400LINE'
   Open branch from bus 73343 to bus 73345 ckt 1  /  73343 GALESF A69.0 73345 LEDYARDJ69.0 1
   Open branch from bus 73343 to bus 73433 ckt 2  /  73343 GALESF A69.0 73433 GALES FY13.8 2
   Open branch from bus 73345 to bus 73615 ckt 1  /  73345 LEDYARDJ69.0 73615 BUDDGTN 69.0 1
   Open branch from bus 73345 to bus 73617 ckt 1  /  73345 LEDYARDJ69.0 73617 TUNNEL  69.0 1
 end
 Contingency '500LINE'
   Open branch from bus 73616 to bus 73617 ckt 1  /  73616 SCRRA PF69.0 73617 TUNNEL  69.0 1
 end
 Contingency '667-690LINE'
   Open branch from bus 73336 to bus 73337 ckt 1  /  73336 FALLS V 69.0 73337 SALISBRY69.0 1
 end
 Contingency '689LINE'
   Open branch from bus 73336 to bus 73346 ckt 1  /  73336 FALLS V 69.0 73346 TORRGTN 69.0 1
 end
 Contingency '693LINE'
   Open branch from bus 73336 to bus 73346 ckt 2  /  73336 FALLS V 69.0 73346 TORRGTN 69.0 2
 end
 Contingency '694LINE'
   Open branch from bus 73335 to bus 73336 ckt 1  /  73335 N.CANAAN69.0 73336 FALLS V 69.0 1
 end
 Contingency '900LINE'
   Open branch from bus 73347 to bus 73348 ckt 1  /  73347 CARD    69.0 73348 MANSFLDJ69.0 1
   Open branch from bus 73348 to bus 73349 ckt 1  /  73348 MANSFLDJ69.0 73349 MANSFLD 69.0 1
   Open branch from bus 73348 to bus 73350 ckt 1  /  73348 MANSFLDJ69.0 73350 SKUNGAMG69.0 1
 end
 Contingency '667-690LINE'
   Open branch from bus 73336 to bus 73337 ckt 1  /  73336 FALLS V 69.0 73337 SALISBRY69.0 1
 end
 Contingency '689LINE'
   Open branch from bus 73336 to bus 73346 ckt 1  /  73336 FALLS V 69.0 73346 TORRGTN 69.0 1
 end
 Contingency '693LINE'
   Open branch from bus 73336 to bus 73346 ckt 2  /  73336 FALLS V 69.0 73346 TORRGTN 69.0 2
 end
 Contingency '694LINE'
   Open branch from bus 73335 to bus 73336 ckt 1  /  73335 N.CANAAN69.0 73336 FALLS V 69.0 1
 end
 Contingency '900LINE'
   Open branch from bus 73347 to bus 73348 ckt 1  /  73347 CARD    69.0 73348 MANSFLDJ69.0 1
   Open branch from bus 73348 to bus 73349 ckt 1  /  73348 MANSFLDJ69.0 73349 MANSFLD 69.0 1
   Open branch from bus 73348 to bus 73350 ckt 1  /  73348 MANSFLDJ69.0 73350 SKUNGAMG69.0 1
 end
 Contingency '1765LINE'
   Open branch from bus 73243 to bus 73255 ckt 1  /  73243 BERLIN   115 73255 WESTSIDE 115 1
```

This document may contain Critical Energy Infrastructure Information -Do Not Release

```
  Open branch from bus 73255 to bus 73425 ckt 1  /  73255 WESTSIDE 115 73425 WESTSIDE13.2 1
end
Contingency '1768LINE'
  Open branch from bus 72955 to bus 72967 ckt 1  /  72955 SOUTHWCK 115 72967 GRANVL J 115 1
  Open branch from bus 72955 to bus 73023 ckt 1  /  72955 SOUTHWCK 115 73023 SOUTHWCK13.8 1
  Open branch from bus 72955 to bus 73023 ckt 2  /  72955 SOUTHWCK 115 73023 SOUTHWCK13.8 2
  Open branch from bus 72955 to bus 73244 ckt 1  /  72955 SOUTHWCK 115 73244 N.BLMFLD 115 1
end
Contingency '1769LINE'
  Open branch from bus 73243 to bus 73256 ckt 1  /  73243 BERLIN   115 73256 E.NBRITN 115 1
end
Contingency '1788LINE'
  Open branch from bus 73245 to bus 73260 ckt 1  /  73245 TORR TER 115 73260 FRKLN DR 115 1
end
Contingency '100-1410DCT'
  Open branch from bus 73343 to bus 73344 ckt 1  /  73343 GALESF A69.0 73344 MONTVLLE69.0 1
  Open branch from bus 73210 to bus 73344 ckt 1  /  73210 MONTVLLE 115 73344 MONTVLLE69.0 1
  Open branch from bus 73210 to bus 73613 ckt 1  /  73210 MONTVLLE 115 73613 BUDDGTN2 115 1
end
Contingency '400-500STB'
  Open branch from bus 73343 to bus 73345 ckt 1  /  73343 GALESF A69.0 73345 LEDYARDJ69.0 1
  Open branch from bus 73345 to bus 73615 ckt 1  /  73345 LEDYARDJ69.0 73615 BUDDGTN 69.0 1
  Open branch from bus 73345 to bus 73617 ckt 1  /  73345 LEDYARDJ69.0 73617 TUNNEL  69.0 1
  Open branch from bus 73616 to bus 73617 ckt 1  /  73616 SCRRA PF69.0 73617 TUNNEL  69.0 1
end
Contingency '400TUNAUSTB'
  Open branch from bus 73343 to bus 73345 ckt 1  /  73343 GALESF A69.0 73345 LEDYARDJ69.0 1
  Open branch from bus 73345 to bus 73615 ckt 1  /  73345 LEDYARDJ69.0 73615 BUDDGTN 69.0 1
  Open branch from bus 73345 to bus 73617 ckt 1  /  73345 LEDYARDJ69.0 73617 TUNNEL  69.0 1
  Open branch from bus 73213 to bus 73617 ckt 1  /  73213 TUNNEL   115 73617 TUNNEL  69.0 1
end
 Contingency '1575-1990DCT'
  Open branch from bus 73164 to bus 73186 ckt 1  /  73164 BALDWNJA 115 73186 BALDWINA 115 1
  Open branch from bus 73164 to bus 73202 ckt 1  /  73164 BALDWNJA 115 73202 FROST BR 115 1
  Open branch from bus 73164 to bus 73333 ckt 1  /  73164 BALDWNJA 115 73333 JACKSHL  115 1
  Open branch from bus 73186 to bus 73386 ckt 1  /  73186 BALDWINA 115 73386 BALDWINA13.8 1
  Open branch from bus 73160 to bus 73228 ckt 1  /  73160 BALDWINB 115 73228 BALDWNJB 115 1
  Open branch from bus 73185 to bus 73228 ckt 1  /  73185 BUNKER H 115 73228 BALDWNJB 115 1
  Open branch from bus 73130 to bus 73228 ckt 1  /  73130 OXFORD   115 73228 BALDWNJB 115 1
  Open branch from bus 73160 to bus 73382 ckt 1  /  73160 BALDWINB 115 73382 BALDWINB13.8 1
end
Contingency '1670-1771DCT'
  Open branch from bus 73198 to bus 73206 ckt 1  /  73198 SOUTHGTN 115 73206 RES RD J 115 1
  Open branch from bus 73206 to bus 73243 ckt 1  /  73206 RES RD J 115 73243 BERLIN   115 1
  Open branch from bus 73206 to bus 73273 ckt 1  /  73206 RES RD J 115 73273 BLRKHIB  115 1
  Open branch from bus 73198 to bus 73243 ckt 1  /  73198 SOUTHGTN 115 73243 BERLIN   115 1
end
Contingency '1670-1830DCT'
  Open branch from bus 73198 to bus 73206 ckt 1  /  73198 SOUTHGTN 115 73206 RES RD J 115 1
  Open branch from bus 73206 to bus 73243 ckt 1  /  73206 RES RD J 115 73243 BERLIN   115 1
  Open branch from bus 73206 to bus 73273 ckt 1  /  73206 RES RD J 115 73273 BLRKHIB  115 1
  Open branch from bus 73198 to bus 73272 ckt 1  /  73198 SOUTHGTN 115 73272 BLRKHIA  115 1
end
Contingency '1732-1788DCT'
  Open branch from bus 73262 to bus 73263 ckt 1  /  73262 CANTON   115 73263 WEINGART 115 1
  Open branch from bus 73260 to bus 73263 ckt 1  /  73260 FRKLN DR 115 73263 WEINGART 115 1
  Open branch from bus 73203 to bus 73263 ckt 1  /  73203 CAMPV PH 115 73263 WEINGART 115 1
  Open branch from bus 73245 to bus 73260 ckt 1  /  73245 TORR TER 115 73260 FRKLN DR 115 1
end
Contingency '1751-1777DCT'
  Open branch from bus 73244 to bus 73251 ckt 1  /  73244 N.BLMFLD 115 73251 BLM JCT  115 1
  Open branch from bus 73251 to bus 73261 ckt 1  /  73251 BLM JCT  115 73261 NW.HTFD  115 1
  Open branch from bus 73242 to bus 73251 ckt 1  /  73242 MANCHSTR 115 73251 BLM JCT  115 1
  Open branch from bus 73244 to bus 73258 ckt 1  /  73244 N.BLMFLD 115 73258 BLOOMFLD 115 1
end
Contingency '1800-1810DCT'
  Open branch from bus 73154 to bus 73208 ckt 1  /  73154 SGTN B   115 73208 U.A.C.TP 115 1
  Open branch from bus 73148 to bus 73208 ckt 1  /  73148 U.A.C.   115 73208 U.A.C.TP 115 1
  Open branch from bus 73208 to bus 73232 ckt 1  /  73208 U.A.C.TP 115 73232 FORESTVL 115 1
  Open branch from bus 73233 to bus 73234 ckt 1  /  73233 BRISTOL  115 73234 CHIPP TP 115 1
```

This document may contain Critical Energy Infrastructure Information -Do Not Release

```
   Open branch from bus 73234 to bus 73235 ckt 1  /  73234 CHIPP TP 115 73235 CHIP HIL 115 1
   Open branch from bus 73154 to bus 73234 ckt 1  /  73154 SGTN B   115 73234 CHIPP TP 115 1
end
Contingency '1800-1825DCT'
   Open branch from bus 73154 to bus 73208 ckt 1  /  73154 SGTN B   115 73208 U.A.C.TP 115 1
   Open branch from bus 73148 to bus 73208 ckt 1  /  73148 U.A.C.   115 73208 U.A.C.TP 115 1
   Open branch from bus 73208 to bus 73232 ckt 1  /  73208 U.A.C.TP 115 73232 FORESTVL 115 1
   Open branch from bus 73232 to bus 73233 ckt 1  /  73232 FORESTVL 115 73233 BRISTOL  115 1
end
Contingency '1810-1825DCT'
   Open branch from bus 73154 to bus 73234 ckt 1  /  73154 SGTN B   115 73234 CHIPP TP 115 1
   Open branch from bus 73233 to bus 73234 ckt 1  /  73233 BRISTOL  115 73234 CHIPP TP 115 1
   Open branch from bus 73234 to bus 73235 ckt 1  /  73234 CHIPP TP 115 73235 CHIP HIL 115 1
   Open branch from bus 73232 to bus 73233 ckt 1  /  73232 FORESTVL 115 73233 BRISTOL  115 1
end
Contingency '362-1772DCT'
   Open branch from bus 73113 to bus 73295 ckt 1  /  73113 HADDM NK 345 73295 BESECK   345 1
   Open branch from bus 72612 to bus 73249 ckt 1  /  72612 CTYANK J 115 73249 P+W MIDD 115 1
end
 Contingency '1000-1675STB'
   Open branch from bus 73210 to bus 73611 ckt 1  /  73210 MONTVLLE 115 73611 DUDLEY T 115 1
   Open branch from bus 73611 to bus 73612 ckt 1  /  73611 DUDLEY T 115 73612 BEAN HLL 115 1
   Open branch from bus 73213 to bus 73612 ckt 1  /  73213 TUNNEL   115 73612 BEAN HLL 115 1
   Open branch from bus 73213 to bus 73544 ckt 1  /  73213 TUNNEL   115 73544 TUNNEL  23.0 1
end
Contingency '1080-1607STB'
   Open branch from bus 73214 to bus 73215 ckt 1  /  73214 WAWECS J 115 73215 CARD     115 1
   Open branch from bus 73210 to bus 73214 ckt 1  /  73210 MONTVLLE 115 73214 WAWECS J 115 1
   Open branch from bus 73214 to bus 73276 ckt 1  /  73214 WAWECS J 115 73276 LISBN PF 115 1
   Open branch from bus 73213 to bus 73276 ckt 1  /  73213 TUNNEL   115 73276 LISBN PF 115 1
   Open branch from bus 73281 to bus 73304 ckt 1  /  73281 EXETR PF 115 73304 KILLINGL 115 1
   Open branch from bus 73226 to bus 73281 ckt 1  /  73226 FRYBRT07 115 73281 EXETR PF 115 1
   Open branch from bus 73226 to bus 73229 ckt 1  /  73226 FRYBRT07 115 73229 FRY BR07 115 1
   Open branch from bus 73229 to bus 73443 ckt 1  /  73229 FRY BR07 115 73443 FRY BRK 23.0 1
   Open branch from bus 73213 to bus 73226 ckt 1  /  73213 TUNNEL   115 73226 FRYBRT07 115 1
end
Contingency '1080-1210-DS'
   Open branch from bus 73214 to bus 73215 ckt 1  /  73214 WAWECS J 115 73215 CARD     115 1
   Open branch from bus 73210 to bus 73214 ckt 1  /  73210 MONTVLLE 115 73214 WAWECS J 115 1
   Open branch from bus 73214 to bus 73276 ckt 1  /  73214 WAWECS J 115 73276 LISBN PF 115 1
   Open branch from bus 73213 to bus 73276 ckt 1  /  73213 TUNNEL   115 73276 LISBN PF 115 1
   Open branch from bus 73209 to bus 73215 ckt 1  /  73209 WILLMNTC 115 73215 CARD     115 1
   Open branch from bus 73209 to bus 73438 ckt 1  /  73209 WILLMNTC 115 73438 WLMNTCN1     1
   Open branch from bus 73209 to bus 73439 ckt 1  /  73209 WILLMNTC 115 73439 WLMNTCN2     1
end
Contingency '1080-1220-DS'
   Open branch from bus 73214 to bus 73215 ckt 1  /  73214 WAWECS J 115 73215 CARD     115 1
   Open branch from bus 73210 to bus 73214 ckt 1  /  73210 MONTVLLE 115 73214 WAWECS J 115 1
   Open branch from bus 73214 to bus 73276 ckt 1  /  73214 WAWECS J 115 73276 LISBN PF 115 1
   Open branch from bus 73213 to bus 73276 ckt 1  /  73213 TUNNEL   115 73276 LISBN PF 115 1
   Open branch from bus 73209 to bus 73215 ckt 2  /  73209 WILLMNTC 115 73215 CARD     115 2
   Open branch from bus 73209 to bus 73438 ckt 1  /  73209 WILLMNTC 115 73438 WLMNTCN1     1
   Open branch from bus 73209 to bus 73439 ckt 1  /  73209 WILLMNTC 115 73439 WLMNTCN2     1
end
Contingency '1210-DTRFSTB'
   Open branch from bus 73209 to bus 73215 ckt 1  /  73209 WILLMNTC 115 73215 CARD     115 1
   Open branch from bus 73209 to bus 73438 ckt 1  /  73209 WILLMNTC 115 73438 WLMNTCN1     1
   Open branch from bus 73209 to bus 73439 ckt 1  /  73209 WILLMNTC 115 73439 WLMNTCN2     1
end
Contingency '1220-DTRFSTB'
   Open branch from bus 73209 to bus 73215 ckt 2  /  73209 WILLMNTC 115 73215 CARD     115 2
   Open branch from bus 73209 to bus 73438 ckt 1  /  73209 WILLMNTC 115 73438 WLMNTCN1     1
   Open branch from bus 73209 to bus 73439 ckt 1  /  73209 WILLMNTC 115 73439 WLMNTCN2     1
end
Contingency '1505-1675STB'
   Open branch from bus 73270 to bus 73304 ckt 1  /  73270 BROOKLYN 115 73304 KILLINGL 115 1
   Open branch from bus 73270 to bus 73444 ckt 1  /  73270 BROOKLYN 115 73444 BROOKLYN23.0 1
   Open branch from bus 73223 to bus 73270 ckt 1  /  73223 FRYBRT05 115 73270 BROOKLYN 115 1
   Open branch from bus 73213 to bus 73223 ckt 1  /  73213 TUNNEL   115 73223 FRYBRT05 115 1
   Open branch from bus 73223 to bus 73236 ckt 1  /  73223 FRYBRT05 115 73236 FRYBR05  115 1
```

This document may contain Critical Energy Infrastructure Information -Do Not Release

```
  Open branch from bus 73236 to bus 73443 ckt 1  /  73236 FRYBR05  115 73443 FRY BRK 23.0 1
  Open branch from bus 73213 to bus 73612 ckt 1  /  73213 TUNNEL   115 73612 BEAN HLL 115 1
  Open branch from bus 73213 to bus 73544 ckt 1  /  73213 TUNNEL   115 73544 TUNNEL  23.0 1
end
Contingency '1235-1090STB'
  Open branch from bus 73152 to bus 73210 ckt 1  /  73152 UNCASVLB 115 73210 MONTVLLE 115 1
  Open branch from bus 73210 to bus 73291 ckt 1  /  73210 MONTVLLE 115 73291 FORTHF   115 1
end
Contingency '1000-1250STB'
  Open branch from bus 73210 to bus 73611 ckt 1  /  73210 MONTVLLE 115 73611 DUDLEY T 115 1
  Open branch from bus 73611 to bus 73612 ckt 1  /  73611 DUDLEY T 115 73612 BEAN HLL 115 1
  Open branch from bus 73151 to bus 73210 ckt 1  /  73151 UNCASVLA 115 73210 MONTVLLE 115 1
end
Contingency '1080-1605STB'
  Open branch from bus 73214 to bus 73215 ckt 1  /  73214 WAWECS J 115 73215 CARD     115 1
  Open branch from bus 73210 to bus 73214 ckt 1  /  73210 MONTVLLE 115 73214 WAWECS J 115 1
  Open branch from bus 73214 to bus 73276 ckt 1  /  73214 WAWECS J 115 73276 LISBN PF 115 1
  Open branch from bus 73213 to bus 73276 ckt 1  /  73213 TUNNEL   115 73276 LISBN PF 115 1
  Open branch from bus 73157 to bus 73238 ckt 1  /  73157 COHNZ JB 115 73238 FLANDRSB 115 1
  Open branch from bus 73157 to bus 73239 ckt 1  /  73157 COHNZ JB 115 73239 WILIAMSB 115 1
  Open branch from bus 73157 to bus 73210 ckt 1  /  73157 COHNZ JB 115 73210 MONTVLLE 115 1
end
Contingency '1280-1500STB'
  Open branch from bus 73216 to bus 73217 ckt 1  /  73216 WHIP JCT 115 73217 BUDDGTN  115 1
  Open branch from bus 73177 to bus 73216 ckt 1  /  73177 MYSTICCT 115 73216 WHIP JCT 115 1
  Open branch from bus 73210 to bus 73216 ckt 1  /  73210 MONTVLLE 115 73216 WHIP JCT 115 1
  Open branch from bus 73177 to bus 73431 ckt 1  /  73177 MYSTICCT 115 73431 MYSTC N1     1
  Open branch from bus 73429 to bus 73431 ckt 1  /  73429 MYSTIC  34.5 73431 MYSTC N1     1
  Open branch from bus 73430 to bus 73431 ckt 1  /  73430 MYSTIC  13.8 73431 MYSTC N1     1
  Open branch from bus 73150 to bus 73156 ckt 1  /  73150 FLNDRSA  115 73156 COHNZ JA 115 1
  Open branch from bus 73149 to bus 73156 ckt 1  /  73149 WILIAMSA 115 73156 COHNZ JA 115 1
  Open branch from bus 73156 to bus 73210 ckt 1  /  73156 COHNZ JA 115 73210 MONTVLLE 115 1
end
Contingency '1410-MNT6STB'
  Open branch from bus 73210 to bus 73613 ckt 1  /  73210 MONTVLLE 115 73613 BUDDGTN2 115 1
  Open branch from bus 73210 to bus 73558 ckt 1  /  73210 MONTVLLE 115 73558 MONTV#5 13.8 1
end
Contingency '1000-345'
  Open branch from bus 73210 to bus 73611 ckt 1  /  73210 MONTVLLE 115 73611 DUDLEY T 115 1
  Open branch from bus 73611 to bus 73612 ckt 1  /  73611 DUDLEY T 115 73612 BEAN HLL 115 1
  Open branch from bus 73109 to bus 73210 ckt 1  /  73109 MONTVILE 345 73210 MONTVLLE 115 1
end
Contingency '1090-345'
  Open branch from bus 73210 to bus 73291 ckt 1  /  73210 MONTVLLE 115 73291 FORTHF   115 1
  Open branch from bus 73109 to bus 73210 ckt 1  /  73109 MONTVILE 345 73210 MONTVLLE 115 1
end
Contingency '1080-345'
  Open branch from bus 73214 to bus 73215 ckt 1  /  73214 WAWECS J 115 73215 CARD     115 1
  Open branch from bus 73210 to bus 73214 ckt 1  /  73210 MONTVLLE 115 73214 WAWECS J 115 1
  Open branch from bus 73214 to bus 73276 ckt 1  /  73214 WAWECS J 115 73276 LISBN PF 115 1
  Open branch from bus 73213 to bus 73276 ckt 1  /  73213 TUNNEL   115 73276 LISBN PF 115 1
  Open branch from bus 73109 to bus 73210 ckt 1  /  73109 MONTVILE 345 73210 MONTVLLE 115 1
end
Contingency '1280-345'
  Open branch from bus 73216 to bus 73217 ckt 1  /  73216 WHIP JCT 115 73217 BUDDGTN  115 1
  Open branch from bus 73177 to bus 73216 ckt 1  /  73177 MYSTICCT 115 73216 WHIP JCT 115 1
  Open branch from bus 73210 to bus 73216 ckt 1  /  73210 MONTVLLE 115 73216 WHIP JCT 115 1
  Open branch from bus 73177 to bus 73431 ckt 1  /  73177 MYSTICCT 115 73431 MYSTC N1     1
  Open branch from bus 73429 to bus 73431 ckt 1  /  73429 MYSTIC  34.5 73431 MYSTC N1     1
  Open branch from bus 73430 to bus 73431 ckt 1  /  73430 MYSTIC  13.8 73431 MYSTC N1     1
  Open branch from bus 73109 to bus 73210 ckt 1  /  73109 MONTVILE 345 73210 MONTVLLE 115 1
end
Contingency '1410-345'
  Open branch from bus 73210 to bus 73613 ckt 1  /  73210 MONTVLLE 115 73613 BUDDGTN2 115 1
  Open branch from bus 73109 to bus 73210 ckt 1  /  73109 MONTVILE 345 73210 MONTVLLE 115 1
end
Contingency '1235-345'
  Open branch from bus 73152 to bus 73210 ckt 1  /  73152 UNCASVLB 115 73210 MONTVLLE 115 1
  Open branch from bus 73109 to bus 73210 ckt 1  /  73109 MONTVILE 345 73210 MONTVLLE 115 1
end
```

This document may contain Critical Energy Infrastructure Information -Do Not Release

```
Contingency '1250-345'
  Open branch from bus 73151 to bus 73210 ckt 1  /  73151 UNCASVLA 115 73210 MONTVLLE 115 1
  Open branch from bus 73109 to bus 73210 ckt 1  /  73109 MONTVILE 345 73210 MONTVLLE 115 1
end
Contingency '1605-345'
  Open branch from bus 73157 to bus 73238 ckt 1  /  73157 COHNZ JB 115 73238 FLANDRSB 115 1
  Open branch from bus 73157 to bus 73239 ckt 1  /  73157 COHNZ JB 115 73239 WILIAMSB 115 1
  Open branch from bus 73157 to bus 73210 ckt 1  /  73157 COHNZ JB 115 73210 MONTVLLE 115 1
  Open branch from bus 73109 to bus 73210 ckt 1  /  73109 MONTVILE 345 73210 MONTVLLE 115 1
end
Contingency '1500-345'
  Open branch from bus 73150 to bus 73156 ckt 1  /  73150 FLNDRSA  115 73156 COHNZ JA 115 1
  Open branch from bus 73149 to bus 73156 ckt 1  /  73149 WILIAMSA 115 73156 COHNZ JA 115 1
  Open branch from bus 73156 to bus 73210 ckt 1  /  73156 COHNZ JA 115 73210 MONTVLLE 115 1
  Open branch from bus 73109 to bus 73210 ckt 1  /  73109 MONTVILE 345 73210 MONTVLLE 115 1
end
Contingency 'MON6-345'
  Open branch from bus 73210 to bus 73559 ckt 1  /  73210 MONTVLLE 115 73559 MONTV#6 22.0 1
  Open branch from bus 73109 to bus 73210 ckt 1  /  73109 MONTVILE 345 73210 MONTVLLE 115 1
end
Contingency 'MON5-345'
  Open branch from bus 73210 to bus 73558 ckt 1  /  73210 MONTVLLE 115 73558 MONTV#5 13.8 1
  Open branch from bus 73109 to bus 73210 ckt 1  /  73109 MONTVILE 345 73210 MONTVLLE 115 1
end
Contingency 'AES-345'
  Open branch from bus 73210 to bus 73538 ckt 1  /  73210 MONTVLLE 115 73538 AESTH PF20.0 1
  Open branch from bus 73109 to bus 73210 ckt 1  /  73109 MONTVILE 345 73210 MONTVLLE 115 1
end
Contingency 'MON5-AUTO'
  Open branch from bus 73210 to bus 73558 ckt 1  /  73210 MONTVLLE 115 73558 MONTV#5 13.8 1
  Open branch from bus 73210 to bus 73344 ckt 1  /  73210 MONTVLLE 115 73344 MONTVLLE69.0 1
end
Contingency '1080-AUTO'
  Open branch from bus 73214 to bus 73215 ckt 1  /  73214 WAWECS J 115 73215 CARD     115 1
  Open branch from bus 73210 to bus 73214 ckt 1  /  73210 MONTVLLE 115 73214 WAWECS J 115 1
  Open branch from bus 73214 to bus 73276 ckt 1  /  73214 WAWECS J 115 73276 LISBN PF 115 1
  Open branch from bus 73213 to bus 73276 ckt 1  /  73213 TUNNEL   115 73276 LISBN PF 115 1
  Open branch from bus 73213 to bus 73617 ckt 1  /  73213 TUNNEL   115 73617 TUNNEL  69.0 1
end
Contingency '1675-AUTO'
  Open branch from bus 73213 to bus 73612 ckt 1  /  73213 TUNNEL   115 73612 BEAN HLL 115 1
  Open branch from bus 73213 to bus 73617 ckt 1  /  73213 TUNNEL   115 73617 TUNNEL  69.0 1
  Open branch from bus 73213 to bus 73544 ckt 1  /  73213 TUNNEL   115 73544 TUNNEL  23.0 1
end
Contingency '900-AUTO'
  Open branch from bus 73347 to bus 73348 ckt 1  /  73347 CARD    69.0 73348 MANSFLDJ69.0 1
  Open branch from bus 73348 to bus 73349 ckt 1  /  73348 MANSFLDJ69.0 73349 MANSFLD 69.0 1
  Open branch from bus 73348 to bus 73350 ckt 1  /  73348 MANSFLDJ69.0 73350 SKUNGAMG69.0 1
  Open branch from bus 73215 to bus 73347 ckt 1  /  73215 CARD     115 73347 CARD    69.0 1
end
Contingency '1210-1490'
  Open branch from bus 73209 to bus 73215 ckt 1  /  73209 WILLMNTC 115 73215 CARD     115 1
  Open branch from bus 73215 to bus 73218 ckt 1  /  73215 CARD     115 73218 STKHOUSE 115 1
  Open branch from bus 73218 to bus 73291 ckt 1  /  73218 STKHOUSE 115 73291 FORTHF   115 1
end
Contingency '1210-AUTO'
  Open branch from bus 73209 to bus 73215 ckt 1  /  73209 WILLMNTC 115 73215 CARD     115 1
  Open branch from bus 73215 to bus 73347 ckt 1  /  73215 CARD     115 73347 CARD    69.0 1
end
Contingency '1220-AUTO'
  Open branch from bus 73209 to bus 73215 ckt 2  /  73209 WILLMNTC 115 73215 CARD     115 2
  Open branch from bus 73215 to bus 73347 ckt 1  /  73215 CARD     115 73347 CARD    69.0 1
end
Contingency '14901070T345'
  Open branch from bus 73215 to bus 73218 ckt 1  /  73215 CARD     115 73218 STKHOUSE 115 1
  Open branch from bus 73218 to bus 73291 ckt 1  /  73218 STKHOUSE 115 73291 FORTHF   115 1
  Open branch from bus 73108 to bus 73215 ckt 1  /  73108 CARD     345 73215 CARD     115 1
end
Contingency 'CARDTRANSFOR'
  Open branch from bus 73108 to bus 73215 ckt 1  /  73108 CARD     345 73215 CARD     115 1
```

This document may contain Critical Energy Infrastructure Information -Do Not Release

```
  Open branch from bus 73215 to bus 73347 ckt 1  /  73215 CARD     115 73347 CARD    69.0 1
end
Contingency 'CARDTAUTO5X'
  Open branch from bus 73108 to bus 73215 ckt 1  /  73108 CARD     345 73215 CARD     115 1
end
Contingency 'ALLINGS1TSTK'
  Open branch from bus 73669 to bus 73681 ckt 1  /  73669 GRAND AV 115 73681 WEST RIV 115 1
  Open branch from bus 73681 to bus 73682 ckt 1  /  73681 WEST RIV 115 73682 ELMWST A 115 1
  Open branch from bus 73682 to bus 73742 ckt 1  /  73682 ELMWST A 115 73742 ELMWEST 13.8 1
  Open branch from bus 73682 to bus 73684 ckt 1  /  73682 ELMWST A 115 73684 ALLINGSA 115 1
  Open branch from bus 73684 to bus 73686 ckt 1  /  73684 ALLINGSA 115 73686 WDMONT A 115 1
  Open branch from bus 73684 to bus 73744 ckt 1  /  73684 ALLINGSA 115 73744 ALLINGS 13.8 1
end
Contingency 'ALLINGS2TSTK'
  Open branch from bus 73669 to bus 73681 ckt 2  /  73669 GRAND AV 115 73681 WEST RIV 115 2
  Open branch from bus 73681 to bus 73683 ckt 1  /  73681 WEST RIV 115 73683 ELMWST B 115 1
  Open branch from bus 73683 to bus 73685 ckt 1  /  73683 ELMWST B 115 73685 ALLINGSB 115 1
  Open branch from bus 73683 to bus 73742 ckt 1  /  73683 ELMWST B 115 73742 ELMWEST 13.8 1
  Open branch from bus 73685 to bus 73687 ckt 1  /  73685 ALLINGSB 115 73687 WDMONT B 115 1
  Open branch from bus 73685 to bus 73744 ckt 1  /  73685 ALLINGSB 115 73744 ALLINGS 13.8 1
end
Contingency 'ASHCREEKBKR'
  Open branch from bus 73703 to bus 73714 ckt 1  /  73703 ASHCREEK 115 73714 ASHCREAC 115 1
  Open branch from bus 73703 to bus 73763 ckt 1  /  73703 ASHCREEK 115 73763 ASHCREEK13.8 1
  Open branch from bus 73703 to bus 73763 ckt 2  /  73703 ASHCREEK 115 73763 ASHCREEK13.8 2
  Open branch from bus 73701 to bus 73703 ckt 1  /  73701 CRRA JCT 115 73703 ASHCREEK 115 1
  Open branch from bus 73173 to bus 73714 ckt 1  /  73173 SASCO CR 115 73714 ASHCREAC 115 1
end
Contingency 'BARBSTK1'
  Open branch from bus 73219 to bus 73220 ckt 1  /  73219 BARBR HL 115 73220 ENFIELD  115 1
  Open branch from bus 73161 to bus 73219 ckt 1  /  73161 ROCKVILL 115 73219 BARBR HL 115 1
  Open branch from bus 73161 to bus 73452 ckt 1  /  73161 ROCKVILL 115 73452 ROCKVILL27.6 1
  Open branch from bus 73161 to bus 73453 ckt 1  /  73161 ROCKVILL 115 73453 ROCKVILL13.8 1
end
Contingency 'BARBSTK2'
  Open branch from bus 73219 to bus 73222 ckt 1  /  73219 BARBR HL 115 73222 WNDSRLK  115 1
  Open branch from bus 73219 to bus 73340 ckt 1  /  73219 BARBR HL 115 73340 ROCKVILL 115 1
  Open branch from bus 73340 to bus 73453 ckt 1  /  73340 ROCKVILL 115 73453 ROCKVILL13.8 1
end
Contingency 'BARB345STK'
  Open branch from bus 72925 to bus 73124 ckt 1  /  72925 LUDLOW   345 73124 BHAUTO   345 1
  Open branch from bus 73103 to bus 73124 ckt 1  /  73103 MEEKVL J 345 73124 BHAUTO   345 1
  Open branch from bus 73219 to bus 73124 ckt 1  /  73219 BARBR HL 115 73124 BHAUTO   345 1
end

Contingency 'BATESROCK1T'
  Open branch from bus 73159 to bus 73178 ckt 1  /  73159 BATES RK 115 73178 SHEPAUG  115 1
  Open branch from bus 73178 to bus 73341 ckt 1  /  73178 SHEPAUG  115 73341 SHEPAUG 69.0 1
  Open branch from bus 73165 to bus 73170 ckt 1  /  73165 STONY HL 115 73170 PLUMTREE 115 1
  Open branch from bus 73159 to bus 73165 ckt 1  /  73159 BATES RK 115 73165 STONY HL 115 1
end
Contingency 'BECONFLSTK'
  Open branch from bus 73188 to bus 73192 ckt 1  /  73188 BCNFL PF 115 73192 DRBY J B 115 1
  Open branch from bus 73188 to bus 73130 ckt 1  /  73188 BCNFL PF 115 73130 OXFORD   115 1
  Open branch from bus 73188 to bus 73387 ckt 1  /  73188 BCNFL PF 115 73387 BEACON F13.8 1
  Open branch from bus 73188 to bus 73387 ckt 2  /  73188 BCNFL PF 115 73387 BEACON F13.8 2
end
Contingency 'BOKUM1T'
  Open branch from bus 73230 to bus 73231 ckt 1  /  73230 HADDAM   115 73231 BOKUM    115 1
  Open branch from bus 73230 to bus 73231 ckt 2  /  73230 HADDAM   115 73231 BOKUM    115 2
end
Contingency 'BOKUM2T'
  Open branch from bus 73230 to bus 73231 ckt 2  /  73230 HADDAM   115 73231 BOKUM    115 2
  Open branch from bus 73231 to bus 73265 ckt 1  /  73231 BOKUM    115 73265 GREEN HL 115 1
end
Contingency 'BOKUM3T'
  Open branch from bus 73231 to bus 73265 ckt 1  /  73231 BOKUM    115 73265 GREEN HL 115 1
  Open branch from bus 73230 to bus 73231 ckt 1  /  73230 HADDAM   115 73231 BOKUM    115 1
end
Contingency 'BROADWYST1'
```

This document may contain Critical Energy Infrastructure Information -Do Not Release

```
  Open branch from bus 73676 to bus 73678 ckt 1  /  73676 MILL RVR 115 73678 BROADWAY 115 1
  Open branch from bus 73678 to bus 73680 ckt 1  /  73678 BROADWAY 115 73680 WATER ST 115 1
end
Contingency 'BUNKERH1T'
  Open branch from bus 73160 to bus 73228 ckt 1  /  73160 BALDWINB 115 73228 BALDWNJB 115 1
  Open branch from bus 73185 to bus 73228 ckt 1  /  73185 BUNKER H 115 73228 BALDWNJB 115 1
  Open branch from bus 73130 to bus 73228 ckt 1  /  73130 OXFORD 115   73228 BALDWNJB 115 1
  Open branch from bus 73160 to bus 73382 ckt 1  /  73160 BALDWINB 115 73382 BALDWINB13.8 1
  Open branch from bus 73185 to bus 73189 ckt 1  /  73185 BUNKER H 115 73189 FREIGHT  115 1
end
Contingency 'BUNKERH2T'
  Open branch from bus 73185 to bus 73189 ckt 1  /  73185 BUNKER H 115 73189 FREIGHT  115 1
  Open branch from bus 73183 to bus 73185 ckt 1  /  73183 SHAWSHIL 115 73185 BUNKER H 115 1
  Open branch from bus 73183 to bus 73202 ckt 1  /  73183 SHAWSHIL 115 73202 FROST BR 115 1
end
Contingency 'BUNKERH3T'
  Open branch from bus 73185 to bus 73199 ckt 1  /  73185 BUNKER H 115 73199 SO.NAUG  115 1
  Open branch from bus 73183 to bus 73185 ckt 1  /  73183 SHAWSHIL 115 73185 BUNKER H 115 1
  Open branch from bus 73183 to bus 73202 ckt 1  /  73183 SHAWSHIL 115 73202 FROST BR 115 1
end
Contingency 'COLONY1T'
  Open branch from bus 73184 to bus 73634 ckt 1  /  73184 LUCHJB55 115 73634 COLONY   115 1
  Open branch from bus 73182 to bus 73184 ckt 1  /  73182 HANOVR55 115 73184 LUCHJB55 115 1
  Open branch from bus 73184 to bus 73198 ckt 1  /  73184 LUCHJB55 115 73198 SOUTHGTN 115 1
  Open branch from bus 73633 to bus 73634 ckt 1  /  73633 NO.WALLF 115 73634 COLONY   115 1
end
Contingency 'DARIEN1T'
  Open branch from bus 73267 to bus 73294 ckt 1  /  73267 DARIEN   115 73294 GLNBRK J 115 1
  Open branch from bus 73167 to bus 73294 ckt 1  /  73167 SO.END   115 73294 GLNBRK J 115 1
  Open branch from bus 73168 to bus 73294 ckt 1  /  73168 GLNBROOK 115 73294 GLNBRK J 115 1
  Open branch from bus 73267 to bus 73300 ckt 1  /  73267 DARIEN   115 73300 ELYTAP   115 1
  Open branch from bus 73286 to bus 73300 ckt 1  /  73286 COMPO    115 73300 ELYTAP   115 1
  Open branch from bus 73286 to bus 73700 ckt 1  /  73286 COMPO    115 73700 PEQUONIC 115 1
end
Contingency 'DEVON1TSTK'
  Open branch from bus 73126 to bus 73199 ckt 1  /  73126 DEVON#2  115 73199 SO.NAUG  115 1
  Open branch from bus 73225 to bus 73700 ckt 1  /  73225 TRMB J B 115 73700 PEQUONIC 115 2
  Open branch from bus 73225 to bus 73709 ckt 1  /  73225 TRMB J B 115 73709 OLD TOWN 115 1
  Open branch from bus 73126 to bus 73225 ckt 1  /  73126 DEVON#2  115 73225 TRMB J B 115 1
end
Contingency 'DEVON3TSTK'
  Open branch from bus 73126 to bus 73129 ckt 1  /  73126 DEVON#2  115 73129 E.DEVONJ 115 1
  Open branch from bus 73126 to bus 73570 ckt 1  /  73126 DEVON#2  115 73570 DEVGAS1113.8 1
end
Contingency 'DEVON6TSTK'
  Open branch from bus 73126 to bus 73704 ckt 1  /  73126 DEVON#2  115 73704 TRAP FLS 115 1
  Open branch from bus 73192 to bus 73705 ckt 1  /  73192 DRBY J B 115 73705 IND.WELL 115 1
  Open branch from bus 73126 to bus 73192 ckt 1  /  73126 DEVON#2  115 73192 DRBY J B 115 1
  Open branch from bus 73188 to bus 73192 ckt 1  /  73188 BCNFL PF 115 73192 DRBY J B 115 1
end
Contingency 'DEVON7TSTK'
  Open branch from bus 73192 to bus 73705 ckt 1  /  73192 DRBY J B 115 73705 IND.WELL 115 1
  Open branch from bus 73126 to bus 73192 ckt 1  /  73126 DEVON#2  115 73192 DRBY J B 115 1
  Open branch from bus 73188 to bus 73192 ckt 1  /  73188 BCNFL PF 115 73192 DRBY J B 115 1
  Open branch from bus 73126 to bus 73573 ckt 1  /  73126 DEVON#2  115 73573 DEVGAS1413.8 1
end
Contingency 'DEVON8TSTK'
  Open branch from bus 73126 to bus 73573 ckt 1  /  73126 DEVON#2  115 73573 DEVGAS1413.8 1
  Open branch from bus 73126 to bus 73224 ckt 1  /  73126 DEVON#2  115 73224 TRMB1730 115 1
end
Contingency 'DEVON10TSTK'
  Open branch from bus 73126 to bus 73224 ckt 1  /  73126 DEVON#2  115 73224 TRMB1730 115 1
  Open branch from bus 73126 to bus 73571 ckt 1  /  73126 DEVON#2  115 73571 DEVGAS1213.8 1
end
Contingency 'DEVON11TSTK'
  Open branch from bus 73126 to bus 73571 ckt 1  /  73126 DEVON#2  115 73571 DEVGAS1213.8 1
  Open branch from bus 73126 to bus 73199 ckt 1  /  73126 DEVON#2  115 73199 SO.NAUG  115 1
end
Contingency 'DEVON12TSTK'
  Open branch from bus 73126 to bus 73570 ckt 1  /  73126 DEVON#2  115 73570 DEVGAS1113.8 1
```

This document may contain Critical Energy Infrastructure Information -Do Not Release

```
  Open branch from bus 73126 to bus 73572 ckt 1  /  73126 DEVON#2  115 73572 DEVGAS1313.8 1
end
Contingency 'DEVON23TSTK'
  Open branch from bus 73195 to bus 73691 ckt 1  /  73195 DEVON    115 73691 DEVON179 115 1
  Open branch from bus 73195 to bus 73553 ckt 1  /  73195 DEVON    115 73553 DEVON#7 13.8 1
end
Contingency 'DEVON24TSTK'
  Open branch from bus 73195 to bus 73690 ckt 1  /  73195 DEVON    115 73690 DEVON178 115 1
  Open branch from bus 73195 to bus 73691 ckt 1  /  73195 DEVON    115 73691 DEVON179 115 1
end
Contingency 'DEVON25TSTK'
  Open branch from bus 73195 to bus 73554 ckt 1  /  73195 DEVON    115 73554 DEVON#8 13.8 1
  Open branch from bus 73195 to bus 73690 ckt 1  /  73195 DEVON    115 73690 DEVON178 115 1
end
Contingency 'DEVON26TSTK'
  Open branch from bus 73195 to bus 73554 ckt 1  /  73195 DEVON    115 73554 DEVON#8 13.8 1
  Open branch from bus 73195 to bus 73707 ckt 1  /  73195 DEVON    115 73707 JUNE ST  115 1
end
Contingency 'DEVON27TSTK'
  Open branch from bus 73195 to bus 73707 ckt 1  /  73195 DEVON    115 73707 JUNE ST  115 1
  Open branch from bus 73195 to bus 73631 ckt 1  /  73195 DEVON    115 73631 WLNGF PF 115 1
end
Contingency 'DEVON28TSTK'
  Open branch from bus 73195 to bus 73631 ckt 1  /  73195 DEVON    115 73631 WLNGF PF 115 1
  Open branch from bus 73195 to bus 73277 ckt 1  /  73195 DEVON    115 73277 DEVON10  115 1
end
Contingency 'DEVSWST1TSTK'
  Open branch from bus 73690 to bus 73692 ckt 1  /  73690 DEVON178 115 73692 BARNUM A 115 1
  Open branch from bus 73692 to bus 73694 ckt 1  /  73692 BARNUM A 115 73694 BAIRD A  115 1
  Open branch from bus 73195 to bus 73690 ckt 1  /  73195 DEVON    115 73690 DEVON178 115 1
  Open branch from bus 73688 to bus 73690 ckt 1  /  73688 MILVON A 115 73690 DEVON178 115 1
  Open branch from bus 73686 to bus 73688 ckt 1  /  73686 WDMONT A 115 73688 MILVON A 115 1
  Open branch from bus 73688 to bus 73748 ckt 1  /  73688 MILVON A 115 73748 MILVON  13.8 1
end
Contingency 'DEVSWST2TSTK'
  Open branch from bus 73691 to bus 73693 ckt 1  /  73691 DEVON179 115 73693 BARNUM B 115 1
  Open branch from bus 73693 to bus 73695 ckt 1  /  73693 BARNUM B 115 73695 BAIRD B  115 1
  Open branch from bus 73195 to bus 73691 ckt 1  /  73195 DEVON    115 73691 DEVON179 115 1
end
Contingency 'DEVSWST3TSTK'
  Open branch from bus 73689 to bus 73691 ckt 1  /  73689 MILVON B 115 73691 DEVON179 115 1
  Open branch from bus 73687 to bus 73689 ckt 1  /  73687 WDMONT B 115 73689 MILVON B 115 1
  Open branch from bus 73691 to bus 73693 ckt 1  /  73691 DEVON179 115 73693 BARNUM B 115 1
  Open branch from bus 73693 to bus 73695 ckt 1  /  73693 BARNUM B 115 73695 BAIRD B  115 1
  Open branch from bus 73195 to bus 73691 ckt 1  /  73195 DEVON    115 73691 DEVON179 115 1
  Open branch from bus 73689 to bus 73748 ckt 1  /  73689 MILVON B 115 73748 MILVON  13.8 1
end
Contingency 'DEVSWST4TSTK'
  Open branch from bus 73195 to bus 73690 ckt 1  /  73195 DEVON    115 73690 DEVON178 115 1
  Open branch from bus 73688 to bus 73690 ckt 1  /  73688 MILVON A 115 73690 DEVON178 115 1
  Open branch from bus 73686 to bus 73688 ckt 1  /  73686 WDMONT A 115 73688 MILVON A 115 1
  Open branch from bus 73688 to bus 73748 ckt 1  /  73688 MILVON A 115 73748 MILVON  13.8 1
end
Contingency 'EDEVSTK'
  Open branch from bus 73126 to bus 73129 ckt 1  /  73126 DEVON#2  115 73129 E.DEVONJ 115 1
  Open branch from bus 73125 to bus 73129 ckt 1  /  73125 MILFORD  115 73129 E.DEVONJ 115 1
  Open branch from bus 73125 to bus 73574 ckt 1  /  73125 MILFORD  115 73574 MILFD#1 13.8 1
  Open branch from bus 73125 to bus 73575 ckt 1  /  73125 MILFORD  115 73575 MILFD#2 13.8 1
end
Contingency 'EMERIDEN1T'
  Open branch from bus 73227 to bus 73633 ckt 1  /  73227 E.MERIDN 115 73633 NO.WALLF 115 1
  Open branch from bus 73227 to bus 73230 ckt 1  /  73227 E.MERIDN 115 73230 HADDAM   115 1
end
Contingency 'ESHORE12TSTK'
  Open branch from bus 73669 to bus 73679 ckt 1  /  73669 GRAND AV 115 73679 ENG STA  115 1
  Open branch from bus 73668 to bus 73679 ckt 1  /  73668 E.SHORE  115 73679 ENG STA  115 1
  Open branch from bus 73651 to bus 73668 ckt 1  /  73651 NH HARBR22.0 73668 E.SHORE  115 1
end
Contingency 'FLAXHILL2T'
  Open branch from bus 73172 to bus 73207 ckt 1  /  73172 NORWALK  115 73207 FLAX HIL 115 1
```

This document may contain Critical Energy Infrastructure Information -Do Not Release

```
   Open branch from bus 73171 to bus 73271 ckt 1  /  73171 NWLK HAR 115 73271 RYTN J B 115 1
   Open branch from bus 73168 to bus 73271 ckt 1  /  73168 GLNBROOK 115 73271 RYTN J B 115 1
   Open branch from bus 73207 to bus 73271 ckt 1  /  73207 FLAX HIL 115 73271 RYTN J B 115 1
 end
 Contingency 'FROSTBR1T'
   Open branch from bus 73104 to bus 73105 ckt 1  /  73104 FRSTBDGE 345 73105 LONG MTN 345 1
   Open branch from bus 73104 to bus 73106 ckt 1  /  73104 FRSTBDGE 345 73106 SOUTHGTN 345 1
   Open branch from bus 73104 to bus 73202 ckt 1  /  73104 FRSTBDGE 345 73202 FROST BR 115 1
 end
Contingency 'FROSTBR15T'
   Open branch from bus 73202 to bus 73203 ckt 1  /  73202 FROST BR 115 73203 CAMPV PH 115 1
   Open branch from bus 73127 to bus 73154 ckt 2  /  73127 SGTNB RX 115 73154 SGTN B   115 2
   Open branch from bus 73127 to bus 73204 ckt 1  /  73127 SGTNB RX 115 73204 TODD     115 1
   Open branch from bus 73204 to bus 73205 ckt 1  /  73204 TODD     115 73205 NOERA JB 115 1
   Open branch from bus 73202 to bus 73205 ckt 1  /  73202 FROST BR 115 73205 NOERA JB 115 1
   Open branch from bus 73201 to bus 73205 ckt 1  /  73201 NOERA    115 73205 NOERA JB 115 1
 end
 Contingency 'FROSTBR21T'
   Open branch from bus 73180 to bus 73202 ckt 1  /  73180 CARMHILL 115 73202 FROST BR 115 1
   Open branch from bus 73180 to bus 73190 ckt 1  /  73180 CARMHILL 115 73190 ROCK RIV 115 1
   Open branch from bus 73128 to bus 73154 ckt 2  /  73128 SGTNB2 R 115 73154 SGTN B   115 2
   Open branch from bus 73128 to bus 73211 ckt 1  /  73128 SGTNB2 R 115 73211 CANAL    115 1
   Open branch from bus 73200 to bus 73211 ckt 1  /  73200 NOERA JA 115 73211 CANAL    115 1
   Open branch from bus 73181 to bus 73200 ckt 1  /  73181 NOERA    115 73200 NOERA JA 115 1
   Open branch from bus 73200 to bus 73202 ckt 1  /  73200 NOERA JA 115 73202 FROST BR 115 1
 end
 Contingency 'FROSTBR27T'
   Open branch from bus 73189 to bus 73202 ckt 1  /  73189 FREIGHT  115 73202 FROST BR 115 1
   Open branch from bus 73164 to bus 73186 ckt 1  /  73164 BALDWNJA 115 73186 BALDWINA 115 1
   Open branch from bus 73164 to bus 73202 ckt 1  /  73164 BALDWNJA 115 73202 FROST BR 115 1
   Open branch from bus 73164 to bus 73333 ckt 1  /  73164 BALDWNJA 115 73333 JACKSHL  115 1
   Open branch from bus 73186 to bus 73386 ckt 1  /  73186 BALDWINA 115 73386 BALDWINA13.8 1
 end
Contingency 'FROSTBR14T'
   Open branch from bus 73202 to bus 73203 ckt 1  /  73202 FROST BR 115 73203 CAMPV PH 115 1
   Open branch from bus 73104 to bus 73202 ckt 1  /  73104 FRSTBDGE 345 73202 FROST BR 115 1
   end
Contingency 'FROSTBR20T'
   Open branch from bus 73180 to bus 73202 ckt 1  /  73180 CARMHILL 115 73202 FROST BR 115 1
   Open branch from bus 73104 to bus 73202 ckt 1  /  73104 FRSTBDGE 345 73202 FROST BR 115 1
   end
Contingency 'FROSTBR23T'
   Open branch from bus 73183 to bus 73202 ckt 1  /  73183 SHAWSHIL 115 73202 FROST BR 115 1
   Open branch from bus 73104 to bus 73202 ckt 1  /  73104 FRSTBDGE 345 73202 FROST BR 115 1
   end
Contingency 'FROSTBR26T'
   Open branch from bus 73189 to bus 73202 ckt 1  /  73189 FREIGHT  115 73202 FROST BR 115 1
   Open branch from bus 73104 to bus 73202 ckt 1  /  73104 FRSTBDGE 345 73202 FROST BR 115 1
   end
Contingency 'GLNBRKASTK'
   Open branch from bus 73145 to bus 73168 ckt 1  /  73145 CDR HGTS 115 73168 GLNBROOK 115 1
   Open branch from bus 73167 to bus 73294 ckt 1  /  73167 SO.END   115 73294 GLNBRK J 115 1
   Open branch from bus 73168 to bus 73294 ckt 1  /  73168 GLNBROOK 115 73294 GLNBRK J 115 1
   Open branch from bus 73267 to bus 73294 ckt 1  /  73267 DARIEN   115 73294 GLNBRK J 115 1
 end
 Contingency 'GLNBRKA1STK'
   Open branch from bus 73145 to bus 73168 ckt 1  /  73145 CDR HGTS 115 73168 GLNBROOK 115 1
   Open branch from bus 73168 to bus 73294 ckt 1  /  73168 GLNBROOK 115 73294 GLNBRK J 115 1
   Open branch from bus 73167 to bus 73168 ckt 1  /  73167 SO.END   115 73168 GLNBROOK 115 1
 end
 Contingency 'GLNBRKA2STK'
   Open branch from bus 73145 to bus 73168 ckt 1  /  73145 CDR HGTS 115 73168 GLNBROOK 115 1
   Open branch from bus 73168 to bus 73294 ckt 1  /  73168 GLNBROOK 115 73294 GLNBRK J 115 1
   Open branch from bus 73162 to bus 73168 ckt 1  /  73162 WATERSDE 115 73168 GLNBROOK 115 1
 end
 Contingency 'GLNBRKA3STK'
   Open branch from bus 73145 to bus 73168 ckt 1  /  73145 CDR HGTS 115 73168 GLNBROOK 115 1
   Open branch from bus 73167 to bus 73294 ckt 1  /  73167 SO.END   115 73294 GLNBRK J 115 1
   Open branch from bus 73168 to bus 73294 ckt 1  /  73168 GLNBROOK 115 73294 GLNBRK J 115 1
   Open branch from bus 73267 to bus 73294 ckt 1  /  73267 DARIEN   115 73294 GLNBRK J 115 1
```

This document may contain Critical Energy Infrastructure Information -Do Not Release

```
end
Contingency 'GLNBRKA4STK'
  Open branch from bus 73145 to bus 73168 ckt 1  /  73145 CDR HGTS 115 73168 GLNBROOK 115 1
  Open branch from bus 73167 to bus 73294 ckt 1  /  73167 SO.END   115 73294 GLNBRK J 115 1
  Open branch from bus 73168 to bus 73294 ckt 1  /  73168 GLNBROOK 115 73294 GLNBRK J 115 1
  Open branch from bus 73267 to bus 73294 ckt 1  /  73267 DARIEN   115 73294 GLNBRK J 115 1
  Open branch from bus 73168 to bus 73172 ckt 2  /  73168 GLNBROOK 115 73172 NORWALK  115 2
end
Contingency 'GLNBRKBSTK'
  Open branch from bus 73145 to bus 73168 ckt 2  /  73145 CDR HGTS 115 73168 GLNBROOK 115 2
  Open branch from bus 73168 to bus 73271 ckt 1  /  73168 GLNBROOK 115 73271 RYTN J B 115 1
  Open branch from bus 73171 to bus 73271 ckt 1  /  73171 NWLK HAR 115 73271 RYTN J B 115 1
  Open branch from bus 73207 to bus 73271 ckt 1  /  73207 FLAX HIL 115 73271 RYTN J B 115 1
end
Contingency 'GLNBRKB1STK'
  Open branch from bus 73145 to bus 73168 ckt 2  /  73145 CDR HGTS 115 73168 GLNBROOK 115 2
  Open branch from bus 73168 to bus 73271 ckt 1  /  73168 GLNBROOK 115 73271 RYTN J B 115 1
  Open branch from bus 73171 to bus 73271 ckt 1  /  73171 NWLK HAR 115 73271 RYTN J B 115 1
  Open branch from bus 73207 to bus 73271 ckt 1  /  73207 FLAX HIL 115 73271 RYTN J B 115 1
  Open branch from bus 73169 to bus 73171 ckt 1  /  73169 RYTN J A 115 73171 NWLK HAR 115 1
  Open branch from bus 73169 to bus 73172 ckt 1  /  73169 RYTN J A 115 73172 NORWALK  115 1
  Open branch from bus 73168 to bus 73169 ckt 1  /  73168 GLNBROOK 115 73169 RYTN J A 115 1
end
Contingency 'GLNBRKB2STK'
  Open branch from bus 73145 to bus 73168 ckt 2  /  73145 CDR HGTS 115 73168 GLNBROOK 115 2
  Open branch from bus 73168 to bus 73271 ckt 1  /  73168 GLNBROOK 115 73271 RYTN J B 115 1
  Open branch from bus 73171 to bus 73271 ckt 1  /  73171 NWLK HAR 115 73271 RYTN J B 115 1
  Open branch from bus 73207 to bus 73271 ckt 1  /  73207 FLAX HIL 115 73271 RYTN J B 115 1
  Open branch from bus 73168 to bus 73237 ckt 1  /  73168 GLNBROOK 115 73237 ELYAVE   115 1
  Open branch from bus 73171 to bus 73237 ckt 1  /  73171 NWLK HAR 115 73237 ELYAVE   115 1
  Open branch from bus 73173 to bus 73237 ckt 1  /  73173 SASCO CR 115 73237 ELYAVE   115 1
end
Contingency 'GLNBRKB3STK'
  Open branch from bus 73145 to bus 73168 ckt 2  /  73145 CDR HGTS 115 73168 GLNBROOK 115 2
  Open branch from bus 73168 to bus 73271 ckt 1  /  73168 GLNBROOK 115 73271 RYTN J B 115 1
  Open branch from bus 73171 to bus 73271 ckt 1  /  73171 NWLK HAR 115 73271 RYTN J B 115 1
  Open branch from bus 73207 to bus 73271 ckt 1  /  73207 FLAX HIL 115 73271 RYTN J B 115 1
  Open branch from bus 73168 to bus 73172 ckt 1  /  73168 GLNBROOK 115 73172 NORWALK  115 1
end
Contingency 'GLNBRKB4STK'
  Open branch from bus 73145 to bus 73168 ckt 2  /  73145 CDR HGTS 115 73168 GLNBROOK 115 2
  Open branch from bus 73168 to bus 73271 ckt 1  /  73168 GLNBROOK 115 73271 RYTN J B 115 1
  Open branch from bus 73171 to bus 73271 ckt 1  /  73171 NWLK HAR 115 73271 RYTN J B 115 1
  Open branch from bus 73207 to bus 73271 ckt 1  /  73207 FLAX HIL 115 73271 RYTN J B 115 1
  Open branch from bus 73168 to bus 73172 ckt 2  /  73168 GLNBROOK 115 73172 NORWALK  115 2
end
Contingency 'GLNBRKCSTK'
  Open branch from bus 73162 to bus 73168 ckt 1  /  73162 WATERSDE 115 73168 GLNBROOK 115 1
  Open branch from bus 73169 to bus 73171 ckt 1  /  73169 RYTN J A 115 73171 NWLK HAR 115 1
  Open branch from bus 73169 to bus 73172 ckt 1  /  73169 RYTN J A 115 73172 NORWALK  115 1
  Open branch from bus 73168 to bus 73169 ckt 1  /  73168 GLNBROOK 115 73169 RYTN J A 115 1
end
Contingency 'GLNBRKDSTK'
  Open branch from bus 73167 to bus 73168 ckt 1  /  73167 SO.END   115 73168 GLNBROOK 115 1
  Open branch from bus 73168 to bus 73237 ckt 1  /  73168 GLNBROOK 115 73237 ELYAVE   115 1
  Open branch from bus 73171 to bus 73237 ckt 1  /  73171 NWLK HAR 115 73237 ELYAVE   115 1
  Open branch from bus 73173 to bus 73237 ckt 1  /  73173 SASCO CR 115 73237 ELYAVE   115 1
end
Contingency 'GRNDAV1TSTK'
  Open branch from bus 73669 to bus 73679 ckt 1  /  73669 GRAND AV 115 73679 ENG STA  115 1
  Open branch from bus 73668 to bus 73679 ckt 1  /  73668 E.SHORE  115 73679 ENG STA  115 1
  Open branch from bus 73669 to bus 73680 ckt 1  /  73669 GRAND AV 115 73680 WATER ST 115 1
end
Contingency 'GRNDAV2TSTK'
  Open branch from bus 73669 to bus 73680 ckt 1  /  73669 GRAND AV 115 73680 WATER ST 115 1
  Open branch from bus 73669 to bus 73676 ckt 1  /  73669 GRAND AV 115 73676 MILL RVR 115 1
end
Contingency 'GRNDAV3TSTK'
  Open branch from bus 73669 to bus 73676 ckt 1  /  73669 GRAND AV 115 73676 MILL RVR 115 1
  Open branch from bus 73668 to bus 73669 ckt 2  /  73668 E.SHORE  115 73669 GRAND AV 115 2
```

This document may contain Critical Energy Infrastructure Information -Do Not Release

```
end
Contingency 'GRNDAV4TSTK'
  Open branch from bus 73668 to bus 73669 ckt 2  /  73668 E.SHORE  115 73669 GRAND AV 115 2
  Open branch from bus 73669 to bus 73681 ckt 2  /  73669 GRAND AV 115 73681 WEST RIV 115 2
  Open branch from bus 73681 to bus 73683 ckt 1  /  73681 WEST RIV 115 73683 ELMWST B 115 1
  Open branch from bus 73683 to bus 73685 ckt 1  /  73683 ELMWST B 115 73685 ALLINGSB 115 1
end
Contingency 'GRNDAV5TSTK'
  Open branch from bus 73669 to bus 73681 ckt 2  /  73669 GRAND AV 115 73681 WEST RIV 115 2
  Open branch from bus 73681 to bus 73683 ckt 1  /  73681 WEST RIV 115 73683 ELMWST B 115 1
  Open branch from bus 73683 to bus 73685 ckt 1  /  73683 ELMWST B 115 73685 ALLINGSB 115 1
  Open branch from bus 73669 to bus 73672 ckt 1  /  73669 GRAND AV 115 73672 SACKETT  115 1
end
Contingency 'GRNDAV6TSTK'
  Open branch from bus 73669 to bus 73672 ckt 1  /  73669 GRAND AV 115 73672 SACKETT  115 1
  Open branch from bus 73669 to bus 73681 ckt 1  /  73669 GRAND AV 115 73681 WEST RIV 115 1
  Open branch from bus 73681 to bus 73682 ckt 1  /  73681 WEST RIV 115 73682 ELMWST A 115 1
  Open branch from bus 73682 to bus 73684 ckt 1  /  73682 ELMWST A 115 73684 ALLINGSA 115 1
end
Contingency 'GRNDAV7TSTK'
  Open branch from bus 73669 to bus 73681 ckt 1  /  73669 GRAND AV 115 73681 WEST RIV 115 1
  Open branch from bus 73681 to bus 73682 ckt 1  /  73681 WEST RIV 115 73682 ELMWST A 115 1
  Open branch from bus 73682 to bus 73684 ckt 1  /  73682 ELMWST A 115 73684 ALLINGSA 115 1
  Open branch from bus 73669 to bus 73679 ckt 1  /  73669 GRAND AV 115 73679 ENG STA  115 1
  Open branch from bus 73668 to bus 73679 ckt 1  /  73668 E.SHORE  115 73679 ENG STA  115 1
end
Contingency 'GREENHLL2T'
  Open branch from bus 73231 to bus 73265 ckt 1  /  73231 BOKUM    115 73265 GREEN HL 115 1
  Open branch from bus 73265 to bus 73334 ckt 1  /  73265 GREEN HL 115 73334 STEPSTNE 115 1
 end
Contingency 'HADDAM27TSTK'
  Open branch from bus 73230 to bus 73231 ckt 1  /  73230 HADDAM   115 73231 BOKUM    115 1
  Open branch from bus 73241 to bus 73249 ckt 1  /  73241 MIDDLTWN 115 73249 P+W MIDD 115 1
  Open branch from bus 73249 to bus 72612 ckt 1  /  73249 P+W MIDD 115 73600 CONN YAN 115 1
  Open branch from bus 73230 to bus 72612 ckt 1  /  73230 HADDAM   115 73600 CONN YAN 115 1
end
Contingency 'HADDAM33TSTK'
  Open branch from bus 73230 to bus 73231 ckt 1  /  73230 HADDAM   115 73231 BOKUM    115 1
  Open branch from bus 73230 to bus 73241 ckt 1  /  73230 HADDAM   115 73241 MIDDLTWN 115 1
end
Contingency 'HAWTHORNST'
  Open branch from bus 73172 to bus 73710 ckt 1  /  73172 NORWALK  115 73710 HAWTHORN 115 1
  Open branch from bus 73710 to bus 73711 ckt 2  /  73710 HAWTHORN 115 73711 HAWTH R  115 2
  Open branch from bus 73709 to bus 73711 ckt 1  /  73709 OLD TOWN 115 73711 HAWTH R  115 1
end
Contingency 'HOPEWEL2TSTK'
  Open branch from bus 73242 to bus 73259 ckt 1  /  73242 MANCHSTR 115 73259 HOPEWELL 115 1
  Open branch from bus 73259 to bus 73264 ckt 1  /  73259 HOPEWELL 115 73264 PORTLAND 115 1
end
Contingency 'JUNEST1'
  Open branch from bus 73196 to bus 73707 ckt 1  /  73196 GLEN JCT 115 73707 JUNE ST  115 1
  Open branch from bus 73196 to bus 73675 ckt 1  /  73196 GLEN JCT 115 73675 MIX AVE  115 1
  Open branch from bus 73196 to bus 73198 ckt 1  /  73196 GLEN JCT 115 73198 SOUTHGTN 115 1
  Open branch from bus 73195 to bus 73707 ckt 1  /  73195 DEVON    115 73707 JUNE ST  115 1
end
Contingency 'MLLRVR1TSTK'
  Open branch from bus 73676 to bus 73678 ckt 1  /  73676 MILL RVR 115 73678 BROADWAY 115 1
  Open branch from bus 73669 to bus 73676 ckt 1  /  73669 GRAND AV 115 73676 MILL RVR 115 1
  Open branch from bus 73676 to bus 73737 ckt 1  /  73676 MILL RVR 115 73737 MILLRIV213.8 1
  Open branch from bus 73676 to bus 73737 ckt 2  /  73676 MILL RVR 115 73737 MILLRIV213.8 2
end
Contingency 'MLLRVR2TSTK'
  Open branch from bus 73676 to bus 73678 ckt 1  /  73676 MILL RVR 115 73678 BROADWAY 115 1
  Open branch from bus 73670 to bus 73676 ckt 1  /  73670 QUINNIP  115 73676 MILL RVR 115 1
  Open branch from bus 73676 to bus 73736 ckt 1  /  73676 MILL RVR 115 73736 MILLRIV113.8 1
  Open branch from bus 73676 to bus 73736 ckt 2  /  73676 MILL RVR 115 73736 MILLRIV113.8 2
end
Contingency 'MIXAVE1'
  Open branch from bus 73196 to bus 73707 ckt 1  /  73196 GLEN JCT 115 73707 JUNE ST  115 1
  Open branch from bus 73196 to bus 73675 ckt 1  /  73196 GLEN JCT 115 73675 MIX AVE  115 1
```

This document may contain Critical Energy Infrastructure Information -Do Not Release

```
  Open branch from bus 73196 to bus 73198 ckt 1  /  73196 GLEN JCT 115 73198 SOUTHGTN 115 1
  Open branch from bus 73672 to bus 73673 ckt 1  /  73672 SACKETT  115 73673 SACKPHS  115 1
  Open branch from bus 73673 to bus 73675 ckt 1  /  73673 SACKPHS  115 73675 MIX AVE  115 1
end
Contingency 'NOHAVN1TSTK'
  Open branch from bus 73671 to bus 73731 ckt 1  /  73671 NO.HAVEN 115 73731 NO.HAVEN13.8 1
  Open branch from bus 73671 to bus 73731 ckt 2  /  73671 NO.HAVEN 115 73731 NO.HAVEN13.8 2
  Open branch from bus 73102 to bus 73671 ckt 1  /  73102 N.HAVCAP 115 73671 NO.HAVEN 115 1
  Open branch from bus 73153 to bus 73671 ckt 1  /  73153 BRANFORD 115 73671 NO.HAVEN 115 1
  Open branch from bus 73632 to bus 73671 ckt 1  /  73632 WALLFRDJ 115 73671 NO.HAVEN 115 1
  Open branch from bus 73670 to bus 73671 ckt 1  /  73670 QUINNIP  115 73671 NO.HAVEN 115 1
end
Contingency 'NOHAVN2TSTK'
  Open branch from bus 73153 to bus 73671 ckt 1  /  73153 BRANFORD 115 73671 NO.HAVEN 115 1
  Open branch from bus 73102 to bus 73671 ckt 1  /  73102 N.HAVCAP 115 73671 NO.HAVEN 115 1
  Open branch from bus 73631 to bus 73632 ckt 1  /  73631 WLNGF PF 115 73632 WALLFRDJ 115 1
  Open branch from bus 73632 to bus 73671 ckt 1  /  73632 WALLFRDJ 115 73671 NO.HAVEN 115 1
  Open branch from bus 73671 to bus 73731 ckt 1  /  73671 NO.HAVEN 115 73731 NO.HAVEN13.8 1
end
Contingency 'NWALLING1T'
  Open branch from bus 73633 to bus 73634 ckt 1  /  73633 NO.WALLF 115 73634 COLONY   115 1
  Open branch from bus 73227 to bus 73633 ckt 1  /  73227 E.MERIDN 115 73633 NO.WALLF 115 1
end
////////// Norwalk (post M-N) breaker failure contingency corrections
//////////Modified by PTI on 10/2 following the instruction of ISO-NE
Contingency 'NORWALKST1'
  Open branch from bus 73293 to bus 73172 ckt 2
  Open branch from bus 73172 to bus 73366 ckt 1  /  73172 NORWALK  115
  Open branch from bus 73172 to bus 73364 ckt 1  /  73172 NORWALK  115
  Open branch from bus 73172 to bus 73367 ckt 1  /  73172 NORWALK  115
  Open branch from bus 73172 to bus 73368 ckt 1  /  73172 NORWALK  115
end
Contingency 'NORWALKST2'
  Open branch from bus 73172 to bus 73366 ckt 1  /  73172 NORWALK  115
  Open branch from bus 73172 to bus 73364 ckt 1  /  73172 NORWALK  115
  Open branch from bus 73172 to bus 73367 ckt 1  /  73172 NORWALK  115
  Open branch from bus 73168 to bus 73172 ckt 1  /  73168 GLNBROOK 115 73172 NORWALK  115 1
end
Contingency 'NORWALKST3'
  Open branch from bus 73293 to bus 73172 ckt 1
  Open branch from bus 73168 to bus 73172 ckt 2  /  73168 GLNBROOK 115 73172 NORWALK  115 2
  Open branch from bus 73172 to bus 73368 ckt 1  /  73172 NORWALK  115
end
Contingency 'NORWLK4TSTK'
  Open branch from bus 73172 to bus 73296 ckt 1  /  73172 NORWALK  115 73296 WLTON115 115 1
  Open branch from bus 73296 to bus 73354 ckt 1  /  73296 WLTON115 115 73354 WLTON13813.8 1
  Open branch from bus 73368 to bus 73172 ckt 2  /
  Open branch from bus 73293 to bus 73172 ckt 2
end
Contingency 'NORWLK7TSTK'
  Open branch from bus 73368 to bus 73172 ckt 2  /
  Open branch from bus 73293 to bus 73172 ckt 2
  Open branch from bus 73710 to bus 73172 ckt 1
end
Contingency 'NORWLK8TSTK'
  Open branch from bus 73710 to bus 73172 ckt 1
  Open branch from bus 73207 to bus 73172 ckt 1
end
Contingency 'NORWLK9TSTK'
  Open branch from bus 73207 to bus 73172 ckt 1
  Open branch from bus 73293 to bus 73172 ckt 1
  Open branch from bus 73172 to bus 73368 ckt 1  /  73172 NORWALK  115
end
Contingency 'NORWLK10TSTK'
  Open branch from bus 73158 to bus 73292 ckt 1  /  73158 WESTON   115 73292 NRWLK RX 115 1
  Open branch from bus 73172 to bus 73292 ckt 2  /  73172 NORWALK  115 73292 NRWLK RX 115 2
  Open branch from bus 73368 to bus 73172 ckt 2  /
  Open branch from bus 73293 to bus 73172 ckt 2
end
Contingency 'NORWLK11TSTK'
```

This document may contain Critical Energy Infrastructure Information -Do Not Release

```
  Open branch from bus 73158 to bus 73292 ckt 1  /  73158 WESTON   115 73292 NRWLK RX 115 1
  Open branch from bus 73172 to bus 73292 ckt 2  /  73172 NORWALK  115 73292 NRWLK RX 115 2
  Open branch from bus 73169 to bus 73171 ckt 1  /  73169 RYTN J A 115 73171 NWLK HAR 115 1
  Open branch from bus 73169 to bus 73172 ckt 1  /  73169 RYTN J A 115 73172 NORWALK  115 1
  Open branch from bus 73168 to bus 73169 ckt 1  /  73168 GLNBROOK 115 73169 RYTN J A 115 1
end
Contingency 'NORWLK12TSTK'
  Open branch from bus 73169 to bus 73171 ckt 1  /  73169 RYTN J A 115 73171 NWLK HAR 115 1
  Open branch from bus 73169 to bus 73172 ckt 1  /  73169 RYTN J A 115 73172 NORWALK  115 1
  Open branch from bus 73168 to bus 73169 ckt 1  /  73168 GLNBROOK 115 73169 RYTN J A 115 1
  Open branch from bus 73293 to bus 73172 ckt 1
  Open branch from bus 73172 to bus 73368 ckt 1  /  73172 NORWALK  115
end
Contingency 'NORWLKHAR1T'
  Open branch from bus 73171 to bus 73551 ckt 1  /  73171 NWLK HAR 115 73551 NORHAR#118.0 1
  Open branch from bus 73168 to bus 73237 ckt 1  /  73168 GLNBROOK 115 73237 ELYAVE   115 1
  Open branch from bus 73171 to bus 73237 ckt 1  /  73171 NWLK HAR 115 73237 ELYAVE   115 1
  Open branch from bus 73173 to bus 73237 ckt 1  /  73173 SASCO CR 115 73237 ELYAVE   115 1
end
Contingency 'NORWLKHAR2T'
  Open branch from bus 73168 to bus 73237 ckt 1  /  73168 GLNBROOK 115 73237 ELYAVE   115 1
  Open branch from bus 73171 to bus 73237 ckt 1  /  73171 NWLK HAR 115 73237 ELYAVE   115 1
  Open branch from bus 73173 to bus 73237 ckt 1  /  73173 SASCO CR 115 73237 ELYAVE   115 1
  Open branch from bus 73169 to bus 73171 ckt 1  /  73169 RYTN J A 115 73171 NWLK HAR 115 1
  Open branch from bus 73169 to bus 73172 ckt 1  /  73169 RYTN J A 115 73172 NORWALK  115 1
  Open branch from bus 73168 to bus 73169 ckt 1  /  73168 GLNBROOK 115 73169 RYTN J A 115 1
end
Contingency 'NORWLKHAR3T'
  Open branch from bus 73166 to bus 73171 ckt 1  /  73166 NORHR138 138 73171 NWLK HAR 115 1
  Open branch from bus 75053 to bus 73166 ckt 1  /  75053 NRTHPT P 138 73166 NORHR138 138 1
  Open branch from bus 75053 to bus 73166 ckt 2  /  75053 NRTHPT P 138 73166 NORHR138 138 2
  Open branch from bus 75053 to bus 73166 ckt 3  /  75053 NRTHPT P 138 73166 NORHR138 138 3
  Open branch from bus 73169 to bus 73171 ckt 1  /  73169 RYTN J A 115 73171 NWLK HAR 115 1
  Open branch from bus 73169 to bus 73172 ckt 1  /  73169 RYTN J A 115 73172 NORWALK  115 1
  Open branch from bus 73168 to bus 73169 ckt 1  /  73168 GLNBROOK 115 73169 RYTN J A 115 1
end
Contingency 'NORWLKHAR4T'
  Open branch from bus 73169 to bus 73171 ckt 1  /  73169 RYTN J A 115 73171 NWLK HAR 115 1
  Open branch from bus 73169 to bus 73172 ckt 1  /  73169 RYTN J A 115 73172 NORWALK  115 1
  Open branch from bus 73168 to bus 73169 ckt 1  /  73168 GLNBROOK 115 73169 RYTN J A 115 1
  Open branch from bus 73171 to bus 73552 ckt 1  /  73171 NWLK HAR 115 73552 NORHAR#220.0 1
end
Contingency 'NORWLKHAR7T'
  Open branch from bus 73168 to bus 73271 ckt 1  /  73168 GLNBROOK 115 73271 RYTN J B 115 1
  Open branch from bus 73171 to bus 73271 ckt 1  /  73171 NWLK HAR 115 73271 RYTN J B 115 1
  Open branch from bus 73207 to bus 73271 ckt 1  /  73207 FLAX HIL 115 73271 RYTN J B 115 1
  Open branch from bus 73171 to bus 73551 ckt 1  /  73171 NWLK HAR 115 73551 NORHAR#118.0 1
end
Contingency 'NORWLKHARBT'
  Open branch from bus 73166 to bus 73171 ckt 1  /  73166 NORHR138 138 73171 NWLK HAR 115 1
  Open branch from bus 75053 to bus 73166 ckt 1  /  75053 NRTHPT P 138 73166 NORHR138 138 1
  Open branch from bus 75053 to bus 73166 ckt 2  /  75053 NRTHPT P 138 73166 NORHR138 138 2
  Open branch from bus 75053 to bus 73166 ckt 3  /  75053 NRTHPT P 138 73166 NORHR138 138 3
end
Contingency 'OLDTOWNST'
  Open branch from bus 73710 to bus 73711 ckt 2  /  73710 HAWTHORN 115 73711 HAWTH R  115 2
  Open branch from bus 73709 to bus 73711 ckt 1  /  73709 OLD TOWN 115 73711 HAWTH R  115 1
  Open branch from bus 73225 to bus 73709 ckt 1  /  73225 TRMB J B 115 73709 OLD TOWN 115 1
  Open branch from bus 73225 to bus 73700 ckt 1  /  73225 TRMB J B 115 73700 PEQUONIC 115 2
  Open branch from bus 73126 to bus 73225 ckt 1  /  73126 DEVON#2  115 73225 TRMB J B 115 1
end
Contingency 'OXFORDSTK'
  Open branch from bus 73130 to bus 73188 ckt 1  /  73130 OXFORD 115 73188 BCNFL PF 115 1
  Open branch from bus 73160 to bus 73228 ckt 1  /  73160 BALDWINB 115 73228 BALDWNJB 115 1
  Open branch from bus 73185 to bus 73228 ckt 1  /  73185 BUNKER H 115 73228 BALDWNJB 115 1
  Open branch from bus 73130 to bus 73228 ckt 1  /  73130 OXFORD   115 73228 BALDWNJB 115 1
   end
Contingency 'PEQUON12TSTK'
  Open branch from bus 73286 to bus 73300 ckt 1  /  73286 COMPO    115 73300 ELYTAP   115 1
  Open branch from bus 73286 to bus 73700 ckt 1  /  73286 COMPO    115 73700 PEQUONIC 115 1
```

This document may contain Critical Energy Infrastructure Information -Do Not Release

```
  Open branch from bus 73142 to bus 73286 ckt 1  /  73142 COMPO   13.8 73286 COMPO    115 1
  Open branch from bus 73142 to bus 73286 ckt 2  /  73142 COMPO   13.8 73286 COMPO    115 2
  Open branch from bus 73267 to bus 73300 ckt 1  /  73267 DARIEN   115 73300 ELYTAP   115 1
  Open branch from bus 73301 to bus 73700 ckt 1  /  73301 SINGER   345 73700 PEQUONIC 115 1
end
Contingency 'PEQUON22TSTK'
  Open branch from bus 73225 to bus 73700 ckt 1  /  73225 TRMB J B 115 73700 PEQUONIC 115 2
  Open branch from bus 73225 to bus 73709 ckt 1  /  73225 TRMB J B 115 73709 OLD TOWN 115 1
  Open branch from bus 73126 to bus 73225 ckt 1  /  73126 DEVON#2  115 73225 TRMB J B 115 1
  Open branch from bus 73696 to bus 73700 ckt 1  /  73696 CONGRESS 115 73700 PEQUONIC 115 1
  Open branch from bus 73696 to bus 73712 ckt 1  /  73696 CONGRESS 115 73712 CNGRES2A 115 1
  Open branch from bus 73694 to bus 73712 ckt 1  /  73694 BAIRD A  115 73712 CNGRES2A 115 1
end
Contingency 'PEQUON32TSTK'
  Open branch from bus 73723 to bus 73700 ckt 1  /  73723 TRMB1697 115 73700 PEQUONIC 115 1
  Open branch from bus 73647 to bus 73700 ckt 1  /  73647 BPTHBR#220.0 73700 PEQUONIC 115 1
end
Contingency 'PEQUON42TSTK'
  Open branch from bus 73697 to bus 73700 ckt 1  /  73697 CONGRESS 115 73700 PEQUONIC 115 1
  Open branch from bus 73697 to bus 73713 ckt 1  /  73697 CONGRESS 115 73713 CNGRES2B 115 1
  Open branch from bus 73695 to bus 73713 ckt 1  /  73695 BAIRD B  115 73713 CNGRES2B 115 1
  Open branch from bus 73648 to bus 73700 ckt 1  /  73648 BPTHBR#322.0 73700 PEQUONIC 115 1
end
Contingency 'PLUMTREE25T'
  Open branch from bus 73170 to bus 73176 ckt 1  /  73170 PLUMTREE 115 73176 TRIANGLE 115 1
  Open branch from bus 73176 to bus 73377 ckt 1  /  73176 TRIANGLE 115 73377 TRIANGLA13.8 1
  Open branch from bus 73165 to bus 73170 ckt 1  /  73165 STONY HL 115 73170 PLUMTREE 115 1
  Open branch from bus 73159 to bus 73165 ckt 1  /  73159 BATES RK 115 73165 STONY HL 115 1
end
Contingency 'PLUMTREE31T'
  Open branch from bus 73170 to bus 73176 ckt 2  /  73170 PLUMTREE 115 73176 TRIANGLE 115 2
  Open branch from bus 73176 to bus 73383 ckt 1  /  73176 TRIANGLE 115 73383 TRIANGLB13.8 1
  Open branch from bus 73146 to bus 73372 ckt 1  /  73146 RDGEFLDB 115 73372 RDGEFLD 13.8 1
  Open branch from bus 73174 to bus 73370 ckt 1  /  73174 PEACEABL 115 73370 PEACEABL13.8 1
  Open branch from bus 73155 to bus 73170 ckt 1  /  73155 RDGFLD J 115 73170 PLUMTREE 115 1
  Open branch from bus 73155 to bus 73174 ckt 1  /  73155 RDGFLD J 115 73174 PEACEABL 115 1
  Open branch from bus 73146 to bus 73155 ckt 1  /  73146 RDGEFLDB 115 73155 RDGFLD J 115 1
end
Contingency 'QUINIPACST1'
  Open branch from bus 73670 to bus 73676 ckt 1  /  73670 QUINNIP  115 73676 MILL RVR 115 1
  Open branch from bus 73670 to bus 73671 ckt 1  /  73670 QUINNIP  115 73671 NO.HAVEN 115 1
end
Contingency 'ROCKRIVER1T'
  Open branch from bus 73179 to bus 73190 ckt 1  /  73179 W.BRKFLD 115 73190 ROCK RIV 115 1
  Open branch from bus 73147 to bus 73190 ckt 1  /  73147 BULLS BR 115 73190 ROCK RIV 115 1
end
Contingency 'SACKETST1'
  Open branch from bus 73669 to bus 73672 ckt 1  /  73669 GRAND AV 115 73672 SACKETT  115 1
  Open branch from bus 73672 to bus 73673 ckt 1  /  73672 SACKETT  115 73673 SACKPHS  115 1
  Open branch from bus 73673 to bus 73675 ckt 1  /  73673 SACKPHS  115 73675 MIX AVE  115 1
end
Contingency 'SASCOCR1T'
  Open branch from bus 73173 to bus 73714 ckt 1  /  73173 SASCO CR 115 73714 ASHCREAC 115 1
  Open branch from bus 73703 to bus 73714 ckt 1  /  73703 ASHCREEK 115 73714 ASHCREAC 115 1
  Open branch from bus 73703 to bus 73714 ckt 1  /  73703 ASHCREEK 115 73714 ASHCREAC 115 2
  Open branch from bus 73171 to bus 73237 ckt 1  /  73171 NWLK HAR 115 73237 ELYAVE   115 1
  Open branch from bus 73168 to bus 73237 ckt 1  /  73168 GLNBROOK 115 73237 ELYAVE   115 1
  Open branch from bus 73173 to bus 73237 ckt 1  /  73173 SASCO CR 115 73237 ELYAVE   115 1
end
Contingency 'SHEPAUG13A'
  Open branch from bus 73159 to bus 73178 ckt 1  /  73159 BATES RK 115 73178 SHEPAUG  115 1
  Open branch from bus 73178 to bus 73341 ckt 1  /  73178 SHEPAUG  115 73341 SHEPAUG 69.0 1
  Open branch from bus 73165 to bus 73179 ckt 1  /  73165 STONY HL 115 73179 W.BRKFLD 115 1
  Open branch from bus 73165 to bus 73178 ckt 1  /  73165 STONY HL 115 73178 SHEPAUG  115 1
end
Contingency 'SOUTHEND5T'
  Open branch from bus 73144 to bus 73167 ckt 1  /  73144 TOMAC    115 73167 SO.END   115 1
  Open branch from bus 73144 to bus 73163 ckt 1  /  73144 TOMAC    115 73163 COS COB  115 1
  Open branch from bus 73168 to bus 73294 ckt 1  /  73168 GLNBROOK 115 73294 GLNBRK J 115 1
  Open branch from bus 73167 to bus 73294 ckt 1  /  73167 SO.END   115 73294 GLNBRK J 115 1
```

This document may contain Critical Energy Infrastructure Information -Do Not Release

```
  Open branch from bus 73267 to bus 73294 ckt 1  /  73267 DARIEN   115 73294 GLNBRK J 115 1
end
Contingency 'SOUTHEND6T'
  Open branch from bus 73168 to bus 73294 ckt 1  /  73168 GLNBROOK 115 73294 GLNBRK J 115 1
  Open branch from bus 73167 to bus 73294 ckt 1  /  73167 SO.END   115 73294 GLNBRK J 115 1
  Open branch from bus 73267 to bus 73294 ckt 1  /  73267 DARIEN   115 73294 GLNBRK J 115 1
  Open branch from bus 73167 to bus 73168 ckt 1  /  73167 SO.END   115 73168 GLNBROOK 115 1
end
Contingency 'SNAUGA1T'
  Open branch from bus 73199 to bus 73388 ckt 1  /  73199 SO.NAUG  115 73388 SO.NAUG 13.8 1
  Open branch from bus 73199 to bus 73388 ckt 2  /  73199 SO.NAUG  115 73388 SO.NAUG 13.8 2
  Open branch from bus 73126 to bus 73199 ckt 1  /  73126 DEVON#2  115 73199 SO.NAUG  115 1
  Open branch from bus 73185 to bus 73199 ckt 1  /  73185 BUNKER H 115 73199 SO.NAUG  115 1
end
Contingency 'SOTHNGTN12T'
  Open branch from bus 73196 to bus 73707 ckt 1  /  73196 GLEN JCT 115 73707 JUNE ST  115 1
  Open branch from bus 73196 to bus 73675 ckt 1  /  73196 GLEN JCT 115 73675 MIX AVE  115 1
  Open branch from bus 73196 to bus 73198 ckt 1  /  73196 GLEN JCT 115 73198 SOUTHGTN 115 1
  Open branch from bus 73198 to bus 73631 ckt 1  /  73198 SOUTHGTN 115 73631 WLNGF PF 115 1
end
Contingency 'SOTHNGTN13T'
  Open branch from bus 73184 to bus 73634 ckt 1  /  73184 LUCHJB55 115 73634 COLONY   115 1
  Open branch from bus 73182 to bus 73184 ckt 1  /  73182 HANOVR55 115 73184 LUCHJB55 115 1
  Open branch from bus 73184 to bus 73198 ckt 1  /  73184 LUCHJB55 115 73198 SOUTHGTN 115 1
  Open branch from bus 73196 to bus 73707 ckt 1  /  73196 GLEN JCT 115 73707 JUNE ST  115 1
  Open branch from bus 73196 to bus 73675 ckt 1  /  73196 GLEN JCT 115 73675 MIX AVE  115 1
  Open branch from bus 73196 to bus 73198 ckt 1  /  73196 GLEN JCT 115 73198 SOUTHGTN 115 1
end
Contingency 'SOTHNGTN14T'
  Open branch from bus 73198 to bus 73243 ckt 1  /  73198 SOUTHGTN 115 73243 BERLIN   115 1
  Open branch from bus 73106 to bus 73198 ckt 4  /  73106 SOUTHGTN 345 73198 SOUTHGTN 115 4
end
Contingency 'SOTHNGTN15T'
  Open branch from bus 73198 to bus 73206 ckt 1  /  73198 SOUTHGTN 115 73206 RES RD J 115 1
  Open branch from bus 73206 to bus 73243 ckt 1  /  73206 RES RD J 115 73243 BERLIN   115 1
  Open branch from bus 73206 to bus 73273 ckt 1  /  73206 RES RD J 115 73273 BLRKHIB  115 1
  Open branch from bus 73198 to bus 73243 ckt 1  /  73198 SOUTHGTN 115 73243 BERLIN   115 1
end
Contingency 'SOTHNGTN16T'
  Open branch from bus 73198 to bus 73206 ckt 1  /  73198 SOUTHGTN 115 73206 RES RD J 115 1
  Open branch from bus 73206 to bus 73243 ckt 1  /  73206 RES RD J 115 73243 BERLIN   115 1
  Open branch from bus 73206 to bus 73273 ckt 1  /  73206 RES RD J 115 73273 BLRKHIB  115 1
  Open branch from bus 73198 to bus 73272 ckt 1  /  73198 SOUTHGTN 115 73272 BLRKHIA  115 1
end
 Contingency 'SOTHNGTN17T'
  Open branch from bus 73198 to bus 73272 ckt 1  /  73198 SOUTHGTN 115 73272 BLRKHIA  115 1
  Open branch from bus 73106 to bus 73198 ckt 1  /  73106 SOUTHGTN 345 73198 SOUTHGTN 115 1
  end
Contingency 'SOTHNGTN20T'
  Open branch from bus 73184 to bus 73634 ckt 1  /  73184 LUCHJB55 115 73634 COLONY   115 1
  Open branch from bus 73182 to bus 73184 ckt 1  /  73182 HANOVR55 115 73184 LUCHJB55 115 1
  Open branch from bus 73184 to bus 73198 ckt 1  /  73184 LUCHJB55 115 73198 SOUTHGTN 115 1
  Open branch from bus 73106 to bus 73198 ckt 4  /  73106 SOUTHGTN 345 73198 SOUTHGTN 115 4
end
Contingency 'SOTHNGTN22T'
  Open branch from bus 73154 to bus 73175 ckt 1  /  73154 SGTN B   115 73175 BLACK RK 115 1
  Open branch from bus 73106 to bus 73154 ckt 2  /  73106 SOUTHGTN 345 73154 SGTN B   115 2
end
Contingency 'SOTHNGTN23T'
  Open branch from bus 73154 to bus 73208 ckt 1  /  73154 SGTN B   115 73208 U.A.C.TP 115 1
  Open branch from bus 73148 to bus 73208 ckt 1  /  73148 U.A.C.   115 73208 U.A.C.TP 115 1
  Open branch from bus 73208 to bus 73232 ckt 1  /  73208 U.A.C.TP 115 73232 FORESTVL 115 1
  Open branch from bus 73154 to bus 73175 ckt 1  /  73154 SGTN B   115 73175 BLACK RK 115 1
end
Contingency 'SOTHNGTN24T'
  Open branch from bus 73154 to bus 73208 ckt 1  /  73154 SGTN B   115 73208 U.A.C.TP 115 1
  Open branch from bus 73148 to bus 73208 ckt 1  /  73148 U.A.C.   115 73208 U.A.C.TP 115 1
  Open branch from bus 73208 to bus 73232 ckt 1  /  73208 U.A.C.TP 115 73232 FORESTVL 115 1
  Open branch from bus 73233 to bus 73234 ckt 1  /  73233 BRISTOL  115 73234 CHIPP TP 115 1
  Open branch from bus 73234 to bus 73235 ckt 1  /  73234 CHIPP TP 115 73235 CHIP HIL 115 1
```

This document may contain Critical Energy Infrastructure Information -Do Not Release

```
  Open branch from bus 73154 to bus 73234 ckt 1  /  73154 SGTN B   115 73234 CHIPP TP 115 1
end
Contingency 'SOTHNGTN25T'
  Open branch from bus 73106 to bus 73154 ckt 3  /  73106 SOUTHGTN 345 73154 SGTN B   115 3
  Open branch from bus 73233 to bus 73234 ckt 1  /  73233 BRISTOL  115 73234 CHIPP TP 115 1
  Open branch from bus 73234 to bus 73235 ckt 1  /  73234 CHIPP TP 115 73235 CHIP HIL 115 1
  Open branch from bus 73154 to bus 73234 ckt 1  /  73154 SGTN B   115 73234 CHIPP TP 115 1
end
Contingency 'SOTHNGTN26T'
  Open branch from bus 73127 to bus 73154 ckt 2  /  73127 SGTNB RX 115 73154 SGTN B   115 2
  Open branch from bus 73127 to bus 73204 ckt 1  /  73127 SGTNB RX 115 73204 TODD     115 1
  Open branch from bus 73106 to bus 73154 ckt 3  /  73106 SOUTHGTN 345 73154 SGTN B   115 3
end
Contingency 'SOTHNGTN28T'
  Open branch from bus 73127 to bus 73154 ckt 2  /  73127 SGTNB RX 115 73154 SGTN B   115 2
  Open branch from bus 73127 to bus 73204 ckt 1  /  73127 SGTNB RX 115 73204 TODD     115 1
  Open branch from bus 73128 to bus 73154 ckt 2  /  73128 SGTNB2 R 115 73154 SGTN B   115 2
  Open branch from bus 73128 to bus 73211 ckt 1  /  73128 SGTNB2 R 115 73211 CANAL    115 1
  Open branch from bus 73200 to bus 73211 ckt 1  /  73200 NOERA JA 115 73211 CANAL    115 1
  Open branch from bus 73181 to bus 73200 ckt 1  /  73181 NOERA    115 73200 NOERA JA 115 1
  Open branch from bus 73200 to bus 73202 ckt 1  /  73200 NOERA JA 115 73202 FROST BR 115 1
end
 Contingency 'SOTHNGTN29T'
  Open branch from bus 73128 to bus 73154 ckt 2  /  73128 SGTNB2 R 115 73154 SGTN B   115 2
  Open branch from bus 73128 to bus 73211 ckt 1  /  73128 SGTNB2 R 115 73211 CANAL    115 1
  Open branch from bus 73193 to bus 73197 ckt 1  /  73193 LUCHJA90 115 73197 HANOVR90 115 1
  Open branch from bus 73154 to bus 73193 ckt 1  /  73154 SGTN B   115 73193 LUCHJA90 115 1
  end
Contingency 'STEVENSNSTK'
  Open branch from bus 73187 to bus 73282 ckt 1  /  73187 STEVENSN 115 73282 SNDYHK   115 1
  Open branch from bus 73194 to bus 73282 ckt 1  /  73194 NEWTOWN  115 73282 SNDYHK   115 1
  Open branch from bus 73170 to bus 73194 ckt 1  /  73170 PLUMTREE 115 73194 NEWTOWN  115 1
  Open branch from bus 73164 to bus 73186 ckt 1  /  73164 BALDWNJA 115 73186 BALDWINA 115 1
  Open branch from bus 73164 to bus 73202 ckt 1  /  73164 BALDWNJA 115 73202 FROST BR 115 1
  Open branch from bus 73164 to bus 73333 ckt 1  /  73164 BALDWNJA 115 73333 JACKSHL  115 1
  Open branch from bus 73191 to bus 73704 ckt 1  /  73191 DRBY J A 115 73704 TRAP FLS 115 1
  Open branch from bus 73191 to bus 73706 ckt 1  /  73191 DRBY J A 115 73706 ANSONIA  115 1
  Open branch from bus 73187 to bus 73191 ckt 1  /  73187 STEVENSN 115 73191 DRBY J A 115 1
end
Contingency 'STONYHILL1T'
  Open branch from bus 73165 to bus 73170 ckt 1  /  73165 STONY HL 115 73170 PLUMTREE 115 1
  Open branch from bus 73159 to bus 73165 ckt 1  /  73159 BATES RK 115 73165 STONY HL 115 1
  Open branch from bus 73165 to bus 73179 ckt 1  /  73165 STONY HL 115 73179 W.BRKFLD 115 1
  Open branch from bus 73165 to bus 73178 ckt 1  /  73165 STONY HL 115 73178 SHEPAUG  115 1
end
Contingency 'TRPFALLST1'
  Open branch from bus 73126 to bus 73704 ckt 1  /  73126 DEVON#2  115 73704 TRAP FLS 115 1
  Open branch from bus 73191 to bus 73704 ckt 1  /  73191 DRBY J A 115 73704 TRAP FLS 115 1
  Open branch from bus 73187 to bus 73191 ckt 1  /  73187 STEVENSN 115 73191 DRBY J A 115 1
  Open branch from bus 73191 to bus 73706 ckt 1  /  73191 DRBY J A 115 73706 ANSONIA  115 1
end
Contingency 'TRUMBULL1T'
  Open branch from bus 73723 to bus 73700 ckt 1  /  73723 TRMB1697 115 73700 PEQUONIC 115 1
  Open branch from bus 73723 to bus 73725 ckt 1  /  73723 TRMB1697 115 73725 TRMB_J 115 1
  Open branch from bus 73725 to bus 73762 ckt 1  /  73725 TRMB_J 115 73762 TRUMBULL13.8 1
  Open branch from bus 73126 to bus 73224 ckt 1  /  73126 DEVON#2  115 73224 TRMB1730 115 1
  Open branch from bus 73724 to bus 73224 ckt 1  /  73724 TRMB1714 115 73224 TRMB1730 115 1
  Open branch from bus 73724 to bus 73725 ckt 1  /  73724 TRMB1714 115 73725 TRMB_J 115 1
end
Contingency 'TRUMBULL2T'
  Open branch from bus 73723 to bus 73700 ckt 1  /  73723 TRMB1697 115 73700 PEQUONIC 115 1
  Open branch from bus 73723 to bus 73224 ckt 1  /  73723 TRMB1697 115 73224 TRMB1730 115 1
  Open branch from bus 73723 to bus 73725 ckt 1  /  73723 TRMB1697 115 73725 TRMB_J 115 1
  Open branch from bus 73725 to bus 73762 ckt 1  /  73725 TRMB_J 115 73762 TRUMBULL13.8 1
  Open branch from bus 73724 to bus 73224 ckt 1  /  73724 TRMB1714 115 73224 TRMB1730 115 1
  Open branch from bus 73158 to bus 73724 ckt 1  /  73158 WESTON   115 73724 TRMB1714 115 1
  Open branch from bus 73724 to bus 73762 ckt 1  /  73724 TRMB1714 115 73762 TRUMBULL13.8 1
end
Contingency 'TRUMBULL3T'
  Open branch from bus 73723 to bus 73224 ckt 1  /  73723 TRMB1697 115 73224 TRMB1730 115 1
```

This document may contain Critical Energy Infrastructure Information -Do Not Release

```
  Open branch from bus 73126 to bus 73224 ckt 1  /  73126 DEVON#2  115 73224 TRMB1730 115 1
  Open branch from bus 73724 to bus 73725 ckt 1  /  73724 TRMB1714 115 73725 TRMB_J 115 1
  Open branch from bus 73158 to bus 73724 ckt 1  /  73158 WESTON   115 73724 TRMB1714 115 1
  Open branch from bus 73724 to bus 73762 ckt 1  /  73724 TRMB1714 115 73762 TRUMBULL13.8 1
end
Contingency 'TRIANGLE2T'
  Open branch from bus 73170 to bus 73176 ckt 2  /  73170 PLUMTREE 115 73176 TRIANGLE 115 2
  Open branch from bus 73176 to bus 73383 ckt 1  /  73176 TRIANGLE 115 73383 TRIANGLB13.8 1
  Open branch from bus 73176 to bus 73268 ckt 2  /  73176 TRIANGLE 115 73268 MIDDLRIV 115 2
  Open branch from bus 73176 to bus 73377 ckt 2  /  73176 TRIANGLE 115 73377 TRIANGLA13.8 2
  Open branch from bus 73268 to bus 73376 ckt 3  /  73268 MIDDLRIV 115 73376 MIDDLRIV13.8 3
end
Contingency 'TRIANGLE3T'
  Open branch from bus 73170 to bus 73176 ckt 1  /  73170 PLUMTREE 115 73176 TRIANGLE 115 1
  Open branch from bus 73176 to bus 73377 ckt 1  /  73176 TRIANGLE 115 73377 TRIANGLA13.8 1
  Open branch from bus 73176 to bus 73268 ckt 1  /  73176 TRIANGLE 115 73268 MIDDLRIV 115 1
  Open branch from bus 73268 to bus 73376 ckt 1  /  73268 MIDDLRIV 115 73376 MIDDLRIV13.8 1
end
Contingency 'TRIANGLE4T'
  Open branch from bus 73170 to bus 73176 ckt 1  /  73170 PLUMTREE 115 73176 TRIANGLE 115 1
  Open branch from bus 73176 to bus 73377 ckt 1  /  73176 TRIANGLE 115 73377 TRIANGLA13.8 1
  Open branch from bus 73176 to bus 73377 ckt 2  /  73176 TRIANGLE 115 73377 TRIANGLA13.8 2
  Open branch from bus 73176 to bus 73268 ckt 1  /  73176 TRIANGLE 115 73268 MIDDLRIV 115 1
  Open branch from bus 73268 to bus 73376 ckt 3  /  73268 MIDDLRIV 115 73376 MIDDLRIV13.8 3
end
Contingency 'TRIANGLE5T'
  Open branch from bus 73170 to bus 73176 ckt 2  /  73170 PLUMTREE 115 73176 TRIANGLE 115 2
  Open branch from bus 73176 to bus 73383 ckt 1  /  73176 TRIANGLE 115 73383 TRIANGLB13.8 1
  Open branch from bus 73176 to bus 73268 ckt 1  /  73176 TRIANGLE 115 73268 MIDDLRIV 115 1
  Open branch from bus 73268 to bus 73376 ckt 1  /  73268 MIDDLRIV 115 73376 MIDDLRIV13.8 1
end
Contingency 'MIDRIVR1T'
  Open branch from bus 73176 to bus 73268 ckt 2  /  73176 TRIANGLE 115 73268 MIDDLRIV 115 2
  Open branch from bus 73268 to bus 73376 ckt 1  /  73268 MIDDLRIV 115 73376 MIDDLRIV13.8 1
  Open branch from bus 73268 to bus 73376 ckt 2  /  73268 MIDDLRIV 115 73376 MIDDLRIV13.8 2
end
Contingency 'MIDRIVR2T'
  Open branch from bus 73176 to bus 73268 ckt 1  /  73176 TRIANGLE 115 73268 MIDDLRIV 115 1
  Open branch from bus 73176 to bus 73377 ckt 2  /  73176 TRIANGLE 115 73377 TRIANGLA13.8 2
  Open branch from bus 73268 to bus 73376 ckt 3  /  73268 MIDDLRIV 115 73376 MIDDLRIV13.8 3
  Open branch from bus 73268 to bus 73376 ckt 2  /  73268 MIDDLRIV 115 73376 MIDDLRIV13.8 2
end
Contingency 'WALLING1TSTK'
  Open branch from bus 73631 to bus 73632 ckt 1  /  73631 WLNGF PF 115 73632 WALLFRDJ 115 1
  Open branch from bus 73632 to bus 73671 ckt 1  /  73632 WALLFRDJ 115 73671 NO.HAVEN 115 1
  Open branch from bus 73102 to bus 73671 ckt 1  /  73102 N.HAVCAP 115 73671 NO.HAVEN 115 1
  Open branch from bus 73594 to bus 73631 ckt 1  /  73594 WALL LV113.8 73631 WLNGF PF 115 1
end
Contingency 'WALLING2TSTK'
  Open branch from bus 73631 to bus 73632 ckt 1  /  73631 WLNGF PF 115 73632 WALLFRDJ 115 1
  Open branch from bus 73632 to bus 73671 ckt 1  /  73632 WALLFRDJ 115 73671 NO.HAVEN 115 1
  Open branch from bus 73102 to bus 73671 ckt 1  /  73102 N.HAVCAP 115 73671 NO.HAVEN 115 1
  Open branch from bus 73195 to bus 73631 ckt 1  /  73195 DEVON    115 73631 WLNGF PF 115 1
end
Contingency 'WALLING3TSTK'
  Open branch from bus 73195 to bus 73631 ckt 1  /  73195 DEVON    115 73631 WLNGF PF 115 1
  Open branch from bus 73595 to bus 73631 ckt 1  /  73595 WALL LV213.8 73631 WLNGF PF 115 1
  Open branch from bus 73596 to bus 73631 ckt 1  /  73596 WALL LV313.8 73631 WLNGF PF 115 1
end
Contingency 'WALLING4TSTK'
  Open branch from bus 73595 to bus 73631 ckt 1  /  73595 WALL LV213.8 73631 WLNGF PF 115 1
  Open branch from bus 73596 to bus 73631 ckt 1  /  73596 WALL LV313.8 73631 WLNGF PF 115 1
  Open branch from bus 73198 to bus 73631 ckt 1  /  73198 SOUTHGTN 115 73631 WLNGF PF 115 1
end
Contingency 'WALLING5TSTK'
  Open branch from bus 73594 to bus 73631 ckt 1  /  73594 WALL LV113.8 73631 WLNGF PF 115 1
  Open branch from bus 73198 to bus 73631 ckt 1  /  73198 SOUTHGTN 115 73631 WLNGF PF 115 1
end
Contingency 'WATERSIDE2T'
  Open branch from bus 73162 to bus 73168 ckt 1  /  73162 WATERSDE 115 73168 GLNBROOK 115 1
```

This document may contain Critical Energy Infrastructure Information -Do Not Release

```
   Open branch from bus 73162 to bus 73163 ckt 1  /  73162 WATERSDE 115 73163 COS COB  115 1
 end
 Contingency 'WBROOKFLD1T'
   Open branch from bus 73179 to bus 73190 ckt 1  /  73179 W.BRKFLD 115 73190 ROCK RIV 115 1
   Open branch from bus 73165 to bus 73179 ckt 1  /  73165 STONY HL 115 73179 W.BRKFLD 115 1
   Open branch from bus 73165 to bus 73178 ckt 1  /  73165 STONY HL 115 73178 SHEPAUG  115 1
 end
 Contingency 'WRIVER1TSTK'
   Open branch from bus 73669 to bus 73681 ckt 1  /  73669 GRAND AV 115 73681 WEST RIV 115 1
   Open branch from bus 73681 to bus 73682 ckt 1  /  73681 WEST RIV 115 73682 ELMWST A 115 1
   Open branch from bus 73682 to bus 73684 ckt 1  /  73682 ELMWST A 115 73684 ALLINGSA 115 1
 end
 Contingency 'WRIVER2TSTK'
   Open branch from bus 73669 to bus 73681 ckt 2  /  73669 GRAND AV 115 73681 WEST RIV 115 2
   Open branch from bus 73681 to bus 73683 ckt 1  /  73681 WEST RIV 115 73683 ELMWST B 115 1
   Open branch from bus 73683 to bus 73685 ckt 1  /  73683 ELMWST B 115 73685 ALLINGSB 115 1
 end
 Contingency 'WESSIDE1TSTK'
   Open branch from bus 73243 to bus 73255 ckt 1  /  73243 BERLIN   115 73255 WESTSIDE 115 1
   Open branch from bus 73255 to bus 73269 ckt 1  /  73255 WESTSIDE 115 73269 DOOLEY   115 1
   Open branch from bus 73241 to bus 73269 ckt 1  /  73241 MIDDLTWN 115 73269 DOOLEY   115 1
 end
 Contingency 'WESTON1T'
   Open branch from bus 73172 to bus 73292 ckt 2  /  73172 NORWALK  115 73292 NRWLK RX 115 2
   Open branch from bus 73158 to bus 73292 ckt 1  /  73158 WESTON   115 73292 NRWLK RX 115 1
   Open branch from bus 73158 to bus 73724 ckt 1  /  73158 WESTON   115 73724 TRMB1714 115 1
 end
 Contingency 'WOODMNT1TSTK'
   Open branch from bus 73684 to bus 73686 ckt 1  /  73684 ALLINGSA 115 73686 WDMONT A 115 1
   Open branch from bus 73684 to bus 73744 ckt 1  /  73684 ALLINGSA 115 73744 ALLINGS 13.8 1
   Open branch from bus 73686 to bus 73746 ckt 1  /  73686 WDMONT A 115 73746 WOODMONT13.8 1
   Open branch from bus 73195 to bus 73690 ckt 1  /  73195 DEVON    115 73690 DEVON178 115 1
   Open branch from bus 73688 to bus 73690 ckt 1  /  73688 MILVON A 115 73690 DEVON178 115 1
   Open branch from bus 73686 to bus 73688 ckt 1  /  73686 WDMONT A 115 73688 MILVON A 115 1
   Open branch from bus 73688 to bus 73748 ckt 1  /  73688 MILVON A 115 73748 MILVON  13.8 1
 end
 Contingency 'WOODMNT2TSTK'
   Open branch from bus 73685 to bus 73687 ckt 1  /  73685 ALLINGSB 115 73687 WDMONT B 115 1
   Open branch from bus 73687 to bus 73746 ckt 1  /  73687 WDMONT B 115 73746 WOODMONT13.8 1
   Open branch from bus 73685 to bus 73744 ckt 1  /  73685 ALLINGSB 115 73744 ALLINGS 13.8 1
   Open branch from bus 73689 to bus 73691 ckt 1  /  73689 MILVON B 115 73691 DEVON179 115 1
   Open branch from bus 73687 to bus 73689 ckt 1  /  73687 WDMONT B 115 73689 MILVON B 115 1
   Open branch from bus 73689 to bus 73748 ckt 1  /  73689 MILVON B 115 73748 MILVON  13.8 1
 end
 Contingency 'HADNKSTBKR'
   Open branch from bus 73113 to bus 73295 ckt 1  /  73113 HADDM NK 345 73295 BESECK   345 1
   Open branch from bus 73107 to bus 73113 ckt 1  /  73107 SCOVL RK 345 73113 HADDM NK 345 1
   Open branch from bus 73109 to bus 73113 ckt 1  /  73109 MONTVILE 345 73113 HADDM NK 345 1
 end
Contingency 'MANCH18TSTK'
   Open branch from bus 73112 to bus 73242 ckt 2  /  73112 MANCHSTR 345 73242 MANCHSTR 115 2
   Open branch from bus 73114 to bus 73500 ckt 1  /  73114 PORT JCT 345 73500 KLEENTAP 345 1
   Open branch from bus 73112 to bus 73114 ckt 1  /  73112 MANCHSTR 345 73114 PORT JCT 345 1
 end
 Contingency 'NOMNTSTBKR'
   Open branch from bus 72924 to bus 72926 ckt 1  /  72924 BERKSHRE 345 72926 NRTHFLD  345 1
   Open branch from bus 72926 to bus 72927 ckt 1  /  72926 NRTHFLD  345 72927 MANH381  345 1
   Open branch from bus 70486 to bus 72927 ckt 1  /  70486 VTYNK345 345 72927 MANH381  345 1
 end
 Contingency 'NMSTBKREAC'
   Open branch from bus 72924 to bus 72926 ckt 1  /  72924 BERKSHRE 345 72926 NRTHFLD  345 1
   Open branch from bus 72926 to bus 72927 ckt 1  /  72926 NRTHFLD  345 72927 MANH381  345 1
   Open branch from bus 70486 to bus 72927 ckt 1  /  70486 VTYNK345 345 72927 MANH381  345 1
   Open branch from bus 70508 to bus 70509 ckt 1  /  70508 SANDB115 115 70509 SB RCTOR 115 1
 end
Contingency 'NWHARTSTK31T'
 Open branch from bus 73251 to bus 73261 ckt 1  /  73251 BLM JCT  115 73261 NW.HTFD  115 1
 Open branch from bus 73242 to bus 73251 ckt 1  /  73242 MANCHSTR 115 73251 BLM JCT  115 1
 Open branch from bus 73258 to bus 73261 ckt 1  /  73258 BLOOMFLD 115 73261 NW.HTFD  115 1
  end
```

This document may contain Critical Energy Infrastructure Information -Do Not Release

```
Contingency 'NWHARTSTK32T'
  Open branch from bus 73258 to bus 73261 ckt 1  /  73258 BLOOMFLD 115 73261 NW.HTFD  115 1
  Open branch from bus 73248 to bus 73279 ckt 1  /  73248 SW.HTFD  115 73279 CDECCA   115 1
  Open branch from bus 73261 to bus 73279 ckt 1  /  73261 NW.HTFD  115 73279 CDECCA   115 1
  Disconnect bus 73251
  end
Contingency 'NWHARTSTK33T'
 Open branch from bus 73248 to bus 73279 ckt 1  /  73248 SW.HTFD  115 73279 CDECCA   115 1
 Open branch from bus 73261 to bus 73279 ckt 1  /  73261 NW.HTFD  115 73279 CDECCA   115 1
 Open branch from bus 73258 to bus 73261 ckt 1
 end
Contingency 'SWHARTSTK1T'
   Open branch from bus 73246 to bus 73248 ckt 1  /  73246 S.MEADOW 115 73248 SW.HTFD  115 1
      Open branch from bus 73248 to bus 73279 ckt 1  /  73248 SW.HTFD  115 73279 CDECCA   115 1
   Open branch from bus 73261 to bus 73279 ckt 1  /  73261 NW.HTFD  115 73279 CDECCA   115 1
    end
     Contingency 'SOMEADSTK2T'
   Open branch from bus 73246 to bus 73253 ckt 1  /  73246 S.MEADOW 115 73253 1775 TAP 115 1
   Open branch from bus 73253 to bus 73274 ckt 1  /  73253 1775 TAP 115 73274 RIVDRHIA 115 1
   Open branch from bus 73242 to bus 73253 ckt 1  /  73242 MANCHSTR 115 73253 1775 TAP 115 1
   Open branch from bus 73274 to bus 73537 ckt 1  /  73274 RIVDRHIA 115 73537 RVRSD PF23.0 1
   Open branch from bus 73246 to bus 73547 ckt 1  /  73246 S.MEADOW 115 73547 CRRA PF 11.5 1
       end
  Contingency 'SOMEADSTK3T'
   Open branch from bus 73246 to bus 73253 ckt 1  /  73246 S.MEADOW 115 73253 1775 TAP 115 1
   Open branch from bus 73253 to bus 73274 ckt 1  /  73253 1775 TAP 115 73274 RIVDRHIA 115 1
   Open branch from bus 73242 to bus 73253 ckt 1  /  73242 MANCHSTR 115 73253 1775 TAP 115 1
   Open branch from bus 73274 to bus 73537 ckt 1  /  73274 RIVDRHIA 115 73537 RVRSD PF23.0 1
   Open branch from bus 73246 to bus 73252 ckt 1  /  73246 S.MEADOW 115 73252 1786 TAP 115 1
   Open branch from bus 73252 to bus 73275 ckt 1  /  73252 1786 TAP 115 73275 RIVDRHIB 115 1
   Open branch from bus 73250 to bus 73252 ckt 1  /  73250 E.HTFD   115 73252 1786 TAP 115 1
       end
    Contingency 'SOMEADSTK4T'
   Open branch from bus 73246 to bus 73252 ckt 1  /  73246 S.MEADOW 115 73252 1786 TAP 115 1
   Open branch from bus 73252 to bus 73275 ckt 1  /  73252 1786 TAP 115 73275 RIVDRHIB 115 1
   Open branch from bus 73250 to bus 73252 ckt 1  /  73250 E.HTFD   115 73252 1786 TAP 115 1
   Open branch from bus 73246 to bus 73548 ckt 1  /  73246 S.MEADOW 115 73548 CRRA PF 11.5 1
      end
    Contingency 'SOMEADSTK5T'
     Open branch from bus 73246 to bus 73248 ckt 1  /  73246 S.MEADOW 115 73248 SW.HTFD  115 1
    Open branch from bus 73246 to bus 73550 ckt 1  /  73246 S.MEADOW 115 73550 SMD1314J 13.8 1
    Open branch from bus 73246 to bus 73548 ckt 1  /  73246 S.MEADOW 115 73548 CRRA PF 11.5 1
           end
     Contingency 'SOMEADSTK7T'
     Open branch from bus 73246 to bus 73248 ckt 1  /  73246 S.MEADOW 115 73248 SW.HTFD  115 1
     Open branch from bus 73246 to bus 73550 ckt 1  /  73246 S.MEADOW 115 73550 SMD1314J 13.8 1
    Open branch from bus 73246 to bus 73258 ckt 1  /  73246 S.MEADOW 115 73258 BLOOMFLD 115 1
            end
  Contingency 'SOMEADSTK8T'
   Open branch from bus 73246 to bus 73257 ckt 1  /  73246 S.MEADOW 115 73257 ROCKY HL 115 1
   Open branch from bus 73257 to bus 73428 ckt 1  /  73257 ROCKY HL 115 73428 ROCKY HL23.0 1
   Open branch from bus 73246 to bus 73549 ckt 1  /  73246 S.MEADOW 115 73549 SMD1112J13.8 1
    Open branch from bus 73246 to bus 73258 ckt 1  /  73246 S.MEADOW 115 73258 BLOOMFLD 115 1
       end
  Contingency 'SOMEADSTK10T'
   Open branch from bus 73246 to bus 73257 ckt 1  /  73246 S.MEADOW 115 73257 ROCKY HL 115 1
   Open branch from bus 73257 to bus 73428 ckt 1  /  73257 ROCKY HL 115 73428 ROCKY HL23.0 1
   Open branch from bus 73246 to bus 73549 ckt 1  /  73246 S.MEADOW 115 73549 SMD1112J13.8 1
   Open branch from bus 73246 to bus 73547 ckt 1  /  73246 S.MEADOW 115 73547 CRRA PF 11.5 1
      end
 Contingency 'EHARTFORDSTK'
   DISCONNECT BUS 73250
   end
Contingency 'MANCHESTK1T'
   Open branch from bus 73219 to bus 73242 ckt 1  /  73219 BARBR HL 115 73242 MANCHSTR 115 1
   Open branch from bus 73463 to bus 73242 ckt 1  /  73463 MANCHSTR23.0 73242 MANCHSTR 115 1
   Open branch from bus 73112 to bus 73242 ckt 1  /  73112 MANCHSTR 345 73242 MANCHSTR 115 1
            end
       Contingency 'MANCHESTK2T'
   Open branch from bus 73219 to bus 73242 ckt 1  /  73219 BARBR HL 115 73242 MANCHSTR 115 1
```

This document may contain Critical Energy Infrastructure Information -Do Not Release

```
Open branch from bus 73242 to bus 73250 ckt 1  /  73242 MANCHSTR 115 73250 E.HTFD   115 1
end
Contingency 'MANCHESTK3T'
Open branch from bus 73242 to bus 73250 ckt 1  /  73242 MANCHSTR 115 73250 E.HTFD   115 1
Open branch from bus 73463 to bus 73242 ckt 3  /  73463 MANCHSTR23.0 73242 MANCHSTR 115 3
Open branch from bus 73112 to bus 73242 ckt 3  /  73112 MANCHSTR 345 73242 MANCHSTR 115 3
end
Contingency 'MANCHESTK4T'
Open branch from bus 73221 to bus 73242 ckt 1  /  73221 S.WNDSRB 115 73242 MANCHSTR 115 1
Open branch from bus 73221 to bus 73458 ckt 1  /  73221 S.WNDSRB 115 73458 SO.WNDSR13.8 1
Open branch from bus 73463 to bus 73242 ckt 1  /  73463 MANCHSTR23.0 73242 MANCHSTR 115 1
Open branch from bus 73112 to bus 73242 ckt 1  /  73112 MANCHSTR 345 73242 MANCHSTR 115 1
end
Contingency 'MANCHESTK5T'
Open branch from bus 73221 to bus 73242 ckt 1  /  73221 S.WNDSRB 115 73242 MANCHSTR 115 1
Open branch from bus 73221 to bus 73458 ckt 1  /  73221 S.WNDSRB 115 73458 SO.WNDSR13.8 1
Open branch from bus 73246 to bus 73253 ckt 1  /  73246 S.MEADOW 115 73253 1775 TAP 115 1
Open branch from bus 73253 to bus 73274 ckt 1  /  73253 1775 TAP 115 73274 RIVDRHIA 115 1
Open branch from bus 73242 to bus 73253 ckt 1  /  73242 MANCHSTR 115 73253 1775 TAP 115 1
Open branch from bus 73274 to bus 73537 ckt 1  /  73274 RIVDRHIA 115 73537 RVRSD PF23.0 1
end
Contingency 'MANCHESTK6T'
Open branch from bus 73246 to bus 73253 ckt 1  /  73246 S.MEADOW 115 73253 1775 TAP 115 1
Open branch from bus 73253 to bus 73274 ckt 1  /  73253 1775 TAP 115 73274 RIVDRHIA 115 1
Open branch from bus 73242 to bus 73253 ckt 1  /  73242 MANCHSTR 115 73253 1775 TAP 115 1
Open branch from bus 73274 to bus 73537 ckt 1  /  73274 RIVDRHIA 115 73537 RVRSD PF23.0 1
Open branch from bus 73463 to bus 73242 ckt 3  /  73463 MANCHSTR23.0 73242 MANCHSTR 115 3
Open branch from bus 73112 to bus 73242 ckt 3  /  73112 MANCHSTR 345 73242 MANCHSTR 115 3
end
Contingency 'MANCHESTK10T'
Open branch from bus 73242 to bus 73259 ckt 1  /  73242 MANCHSTR 115 73259 HOPEWELL 115 1
Open branch from bus 73259 to bus 73472 ckt 2  /  73259 HOPEWELL 115 73472 HOPEWELL23.0 2
Open branch from bus 73463 to bus 73242 ckt 1  /  73463 MANCHSTR23.0 73242 MANCHSTR 115 1
Open branch from bus 73112 to bus 73242 ckt 1  /  73112 MANCHSTR 345 73242 MANCHSTR 115 1
end
Contingency 'MANCHESTK11T'
Open branch from bus 73242 to bus 73259 ckt 1  /  73242 MANCHSTR 115 73259 HOPEWELL 115 1
Open branch from bus 73259 to bus 73472 ckt 2  /  73259 HOPEWELL 115 73472 HOPEWELL23.0 2
Open branch from bus 73463 to bus 73242 ckt 3  /  73463 MANCHSTR23.0 73242 MANCHSTR 115 3
Open branch from bus 73112 to bus 73242 ckt 3  /  73112 MANCHSTR 345 73242 MANCHSTR 115 3
end
Contingency 'MANCHESTK16T'
Open branch from bus 73463 to bus 73242 ckt 2 /  73463 MANCHSTR23.0 73242 MANCHSTR 115 2
Open branch from bus 73463 to bus 73242 ckt 1  /  73463 MANCHSTR23.0 73242 MANCHSTR 115 1
Open branch from bus 73112 to bus 73242 ckt 1  /  73112 MANCHSTR 345 73242 MANCHSTR 115 1
end
Contingency 'MANCHESTK17T'
Open branch from bus 73463 to bus 73242 ckt 2 /  73463 MANCHSTR23.0 73242 MANCHSTR 115 2
Open branch from bus 73463 to bus 73242 ckt 3  /  73463 MANCHSTR23.0 73242 MANCHSTR 115 3
Open branch from bus 73112 to bus 73242 ckt 3  /  73112 MANCHSTR 345 73242 MANCHSTR 115 3
end
Contingency 'MANCHESTK3A'
Open branch from bus 73463 to bus 73242 ckt 1  /  73463 MANCHSTR23.0 73242 MANCHSTR 115 1
Open branch from bus 73112 to bus 73242 ckt 1  /  73112 MANCHSTR 345 73242 MANCHSTR 115 1
Disconnect bus 73251
end
Contingency 'MANCHESTK4X'
Open branch from bus 73463 to bus 73242 ckt 1  /  73463 MANCHSTR23.0 73242 MANCHSTR 115 1
Open branch from bus 73112 to bus 73242 ckt 1  /  73112 MANCHSTR 345 73242 MANCHSTR 115 1
end
Contingency 'MANCHESTK6X'
Open branch from bus 73463 to bus 73242 ckt 3  /  73463 MANCHSTR23.0 73242 MANCHSTR 115 3
Open branch from bus 73112 to bus 73242 ckt 3  /  73112 MANCHSTR 345 73242 MANCHSTR 115 3
end
Contingency 'NBLMFBR12T'
Open branch from bus 73244 to bus 73258 ckt 1  /  73244 N.BLMFLD 115 73258 BLOOMFLD 115 1
Open branch from bus 73111 to bus 73244 ckt 1  /  73111 NOBLMFLD 345 73244 N.BLMFLD 115 1
end
Contingency 'NBLMFBR13T'
Open branch from bus 73244 to bus 73258 ckt 1  /  73244 N.BLMFLD 115 73258 BLOOMFLD 115 1
```

This document may contain Critical Energy Infrastructure Information -Do Not Release

```
   Open branch from bus 73244 to bus 73251 ckt 1  /  73244 N.BLMFLD 115 73251 BLM JCT  115 1
   Open branch from bus 73251 to bus 73261 ckt 1  /  73251 BLM JCT  115 73261 NW.HTFD  115 1
   Open branch from bus 73242 to bus 73251 ckt 1  /  73242 MANCHSTR 115 73251 BLM JCT  115 1
   end
   Contingency 'NBLMFBR18T'
   Open branch from bus 72991 to bus 73244 ckt 1  /  72991 SAGAR    115 73244 N.BLMFLD 115 1
   Open branch from bus 72977 to bus 72991 ckt 2  /  72977 SO.AGAWM 115 72991 SAGAR    115 2
   Open branch from bus 73111 to bus 73244 ckt 1  /  73111 NOBLMFLD 345 73244 N.BLMFLD 115 1
   end
   Contingency 'NBLMFBR19T'
   Open branch from bus 72991 to bus 73244 ckt 1  /  72991 SAGAR    115 73244 N.BLMFLD 115 1
   Open branch from bus 72977 to bus 72991 ckt 2  /  72977 SO.AGAWM 115 72991 SAGAR    115 2
   Open branch from bus 73244 to bus 73247 ckt 1  /  73244 N.BLMFLD 115 73247 FARMNGTN 115 1
   end
   Contingency 'NBLMFBR21T'
   Open branch from bus 72955 to bus 72967 ckt 1  /  72955 SOUTHWCK 115 72967 GRANVL J 115 1
   Open branch from bus 72955 to bus 73023 ckt 1  /  72955 SOUTHWCK 115 73023 SOUTHWCK13.8 1
   Open branch from bus 72955 to bus 73023 ckt 2  /  72955 SOUTHWCK 115 73023 SOUTHWCK13.8 2
   Open branch from bus 72955 to bus 73244 ckt 1  /  72955 SOUTHWCK 115 73244 N.BLMFLD 115 1
   Open branch from bus 73111 to bus 73244 ckt 1  /  73111 NOBLMFLD 345 73244 N.BLMFLD 115 1
   end
   Contingency 'NBLMFBR22T'
   Open branch from bus 72955 to bus 72967 ckt 1  /  72955 SOUTHWCK 115 72967 GRANVL J 115 1
   Open branch from bus 72955 to bus 73023 ckt 1  /  72955 SOUTHWCK 115 73023 SOUTHWCK13.8 1
   Open branch from bus 72955 to bus 73023 ckt 2  /  72955 SOUTHWCK 115 73023 SOUTHWCK13.8 2
   Open branch from bus 72955 to bus 73244 ckt 1  /  72955 SOUTHWCK 115 73244 N.BLMFLD 115 1
   Open branch from bus 73244 to bus 73288 ckt 1  /  73244 N.BLMFLD 115 73288 NESMBY   115 1
   Open branch from bus 73262 to bus 73288 ckt 1  /  73262 CANTON   115 73288 NESMBY   115 1
   end
   Contingency 'NBLMFBR2A'
   Open branch from bus 72992 to bus 73244 ckt 1  /  72992 SAGBR    115 73244 N.BLMFLD 115 1
   Open branch from bus 72977 to bus 72992 ckt 2  /  72977 SO.AGAWM 115 72992 SAGBR    115 2
   Open branch from bus 73111 to bus 73244 ckt 1  /  73111 NOBLMFLD 345 73244 N.BLMFLD 115 1
   end
//////////// Wilton Area Corrections   added by PTI on 10/15  ////////////////////////////////////////////////////////////////
 Contingency '1470LINE'
   Open branch from bus 73296 to bus 73354 ckt 1  /  73296 WLTON115 115 73354 WLTON13813.8 1
   Open branch from bus 73296 to bus 73139 ckt 1  /  73296 WLTON115 115 73139 PT3260   115 1
   Open branch from bus 73174 to bus 73139 ckt 1  /  73174 PEACEABL 115 73139 PT3260   115 1
   Open branch from bus 73143 to bus 73372 ckt 1  /  73143 RDGEFLDA 115 73372 RDGEFLD 13.8 1
 end

 Contingency '1470-1565DCT'
   Open branch from bus 73174 to bus 73370 ckt 1  /  73174 PEACEABL 115 73370 PEACEABL13.8 1
   Open branch from bus 73174 to bus 73370 ckt 2  /  73174 PEACEABL 115 73370 PEACEABL13.8 2
   Open branch from bus 73174 to bus 73139 ckt 1  /  73174 PEACEABL 115 73139 PT3260   115 1
   Open branch from bus 73155 to bus 73174 ckt 1  /  73155 RDGFLD J 115 73174 PEACEABL 115 1
   Open branch from bus 73143 to bus 73372 ckt 1  /  73143 RDGEFLDA 115 73372 RDGEFLD 13.8 1
   Open branch from bus 73143 to bus 73139 ckt 1  /  73143 RDGEFLDA 115 73139 PT3260   115 1
   Open branch from bus 73155 to bus 73170 ckt 1  /  73155 RDGFLD J 115 73170 PLUMTREE 115 1
   Open branch from bus 73146 to bus 73155 ckt 1  /  73146 RDGEFLDB 115 73155 RDGFLD J 115 1
   Open branch from bus 73146 to bus 73372 ckt 1  /  73146 RDGEFLDB 115 73372 RDGEFLD 13.8 1
 end
 Contingency 'WILTON1TSTK'
   Open branch from bus 73296 to bus 73354 ckt 1  /  73296 WLTON115 115 73354 WLTON13813.8 1
   Open branch from bus 73296 to bus 73354 ckt 2  /  73296 WLTON115 115 73354 WLTON13813.8 2
   Open branch from bus 73296 to bus 73139 ckt 1  /  73296 WLTON115 115 73139 PT3260   115 1
   Open branch from bus 73172 to bus 73296 ckt 1  /  73172 NORWALK  115 73296 WLTON115 115 1
   Open branch from bus 73143 to bus 73372 ckt 1  /  73143 RDGEFLDA 115 73372 RDGEFLD 13.8 1
   Open branch from bus 73143 to bus 73139 ckt 1  /  73143 RDGEFLDA 115 73139 PT3260   115 1
 end
Contingency 'Garbage'
   OPEN LINE FROM BUS 1111 TO BUS 9999 CKT 1
   end

end
```

This document may contain Critical Energy Infrastructure Information -Do Not Release

Appendix

D

# N-1 Analysis – Detailed Results

This appendix contains N-1 analysis results of the following scenarios

**Tapping Line #1191**

- **2010-PK_1B-NY-NE=1000_TAP1191**: Summer Peak-Dispatch With Project Tapping Line 1191, NY-NE interface at 1000 MW
- **2010-PK_1B-NY-NE=-1000_TAP1191**: Summer Peak-Dispatch With Project Tapping Line 1191, NY-NE interface at -1000 MW
- **2010-SH_1B-NY-NE=1000_TAP1191**: Summer Shoulder-Dispatch With Project Tapping Line 1191, NY-NE interface at 1000 MW
- **2010-SH_1B-NY-NE=-1000_TAP1191**: Summer Shoulder-Dispatch With Project Tapping Line 1191, NY-NE interface at -1000 MW

**Tapping Line #1238**

- **2010-PK_1B-NY-NE=1000_TAP1238**: Summer Peak-Dispatch With Project Tapping Line 1238, NY-NE interface at 1000 MW
- **2010-PK_1B-NY-NE=-1000_TAP1238**: Summer Peak-Dispatch With Project Tapping Line 1238, NY-NE interface at -1000 MW
- **2010-SH_1B-NY-NE=1000_TAP1238**: Summer Shoulder-Dispatch With Project Tapping Line 1238, NY-NE interface at 1000 MW
- **2010-SH_1B-NY-NE=-1000_TAP1238**: Summer Shoulder-Dispatch With Project Tapping Line 1238, NY-NE interface at -1000 MW



This document may contain Critical Energy Infrastructure Information -Do Not Release

| Dispatch Scenario - Peak Case, Post M-N, OPTION - Line #1191, ALL LINES IN, High Import(CT, SWCT) , NY-NE = 1000 | | | | | | | | |
|---|---|---|---|---|---|---|---|---|
| Thermal Impact | | | | | | | | |
| 1 | 2 | 3 | 4 | 5 | 6 | 7 | 8 |
| Monitored Element | Rating | Loading(%) | Rating | Loading(%) | (5)-(3) | | |
| ** From bus ** ** To bus ** CKT | MVA | Without Project | MVA | With Project | Impact (%) | Prior Outage | Contingency |
| 73154 SGTN B 115.00 73234 CHIPP TP 115.00 1 | 221 | 89.9 | 221 | 97.1 | 7.2 | Intact | SOTHNGTN23T |
| 73154 SGTN B 115.00 73234 CHIPP TP 115.00 1 | 221 | 89.1 | 221 | 96.3 | 7.2 | Intact | 1800-1860LNS |

This document may contain Critical Energy Infrastructure Information -Do Not Release

| Dispatch Scenario - Peak Case, Post M-N, OPTION - Line #1191, ALL LINES IN, High Import(CT, SWCT) , NY-NE = -1000 | | | | | | | | |
|---|---|---|---|---|---|---|---|---|
| Thermal Impact | | | | | | | | |
| 1 | 2 | 3 | 4 | 5 | 6 | 7 | 8 |
| Monitored Element | Rating | Loading(%) | Rating | Loading(%) | (5)-(3) | | |
| ** From bus ** ** To bus ** CKT | MVA | Without Project | MVA | With Project | Impact (%) | Prior Outage | Contingency |
| 73244 N.BLMFLD 115.00 73288 NESMBY 115.00 1 | 221 | 98.6 | 221 | 100.3 | 1.7 | Intact | BASE CASE |
| 73244 N.BLMFLD 115.00 73288 NESMBY 115.00 1 | 284 | 98.6 | 284 | 99.8 | 1.2 | Intact | 353LINE |
| 73244 N.BLMFLD 115.00 73288 NESMBY 115.00 1 | 284 | 96.3 | 284 | 97.6 | 1.3 | Intact | SGTN5TSTK |
| 73244 N.BLMFLD 115.00 73288 NESMBY 115.00 1 | 284 | 96.1 | 284 | 97.3 | 1.2 | Intact | SGTN4TSTK |
| 73154 SGTN B 115.00 73234 CHIPP TP 115.00 1 | 221 | 91.8 | 221 | 98.9 | 7.1 | Intact | SOTHNGTN23T |
| 73154 SGTN B 115.00 73234 CHIPP TP 115.00 1 | 221 | 90.9 | 221 | 98 | 7.1 | Intact | 1800-1860LNS |

This document may contain Critical Energy Infrastructure Information -Do Not Release

| Dispatch Scenario - Shoulder Case, Post M-N, OPTION - Line #1191, ALL LINES IN, High Import(CT, SWCT) , NY-NE = 1000 | | | | | | | |
|---|---|---|---|---|---|---|---|
| Thermal Impact | | | | | | | |
| 1 | 2 | 3 | 4 | 5 | 6 | 7 | 8 |
| Monitored Element | Rating | Loading(%) | Rating | Loading(%) | (5)-(3) | | |
| ** From bus ** ** To bus ** CKT | MVA | Without Project | MVA | With Project | Impact (%) | Prior Outage | Contingency |
| No Thermal Violation | | | | | | | |

This document may contain Critical Energy Infrastructure Information -Do Not Release

| Dispatch Scenario - Shoulder Case, Post M-N, OPTION - Line #1191, ALL LINES IN, High Import(CT, SWCT) , NY-NE = -1000 | | | | | | | |
|---|---|---|---|---|---|---|---|
| Thermal Impact | | | | | | | |
| 1 | 2 | 3 | 4 | 5 | 6 | 7 | 8 |
| Monitored Element | Rating | Loading(%) | Rating | Loading(%) | (5)-(3) | | |
| ** From bus ** ** To bus ** CKT | MVA | Without Project | MVA | With Project | Impact (%) | Prior Outage | Contingency |
| No Thermal Violation | | | | | | | |

This document may contain Critical Energy Infrastructure Information -Do Not Release

| Dispatch Scenario - Peak Case, Post M-N, OPTION - Line #1238, ALL LINES IN, High Import(CT, SWCT) , NY-NE = 1000 | | | | | | | | |
|---|---|---|---|---|---|---|---|---|
| Thermal Impact | | | | | | | | |
| 1 | 2 | 3 | 4 | 5 | 6 | 7 | 8 |
| Monitored Element | Rating | Loading(%) | Rating | Loading(%) | (5)-(3) | | |
| ** From bus ** ** To bus ** CKT | MVA | Without Project | MVA | With Project | Impact (%) | Prior Outage | Contingency |
| 73154 SGTN B 115.00 73234 CHIPP TP 115.00 1 | 221 | 89.9 | 221 | 97.3 | 7.4 | Intact | SOTHNGTN23T |
| 73154 SGTN B 115.00 73234 CHIPP TP 115.00 1 | 221 | 89.1 | 221 | 96.5 | 7.4 | Intact | 1800-1860LNS |

This document may contain Critical Energy Infrastructure Information -Do Not Release

| Dispatch Scenario - Peak Case, Post M-N, OPTION - Line #1238, ALL LINES IN, High Import(CT, SWCT) , NY-NE = -1000 | | | | | | | | |
|---|---|---|---|---|---|---|---|---|
| Thermal Impact | | | | | | | | |
| 1 | 2 | 3 | 4 | 5 | 6 | 7 | 8 | |
| Monitored Element | Rating | Loading(%) | Rating | Loading(%) | (5)-(3) | | | |
| ** From bus ** ** To bus ** CKT | MVA | Without Project | MVA | With Project | Impact (%) | Prior Outage | Contingency | |
| 73244 N.BLMFLD 115.00 73288 NESMBY 115.00 1 | 221 | 98.6 | 221 | 100.5 | 1.9 | Intact | BASE CASE | |
| 73244 N.BLMFLD 115.00 73288 NESMBY 115.00 1 | 284 | 98.6 | 284 | 100 | 1.4 | Intact | 353LINE | |
| 73244 N.BLMFLD 115.00 73288 NESMBY 115.00 1 | 284 | 96.3 | 284 | 97.7 | 1.4 | Intact | SGTN5TSTK | |
| 73244 N.BLMFLD 115.00 73288 NESMBY 115.00 1 | 284 | 96.1 | 284 | 97.5 | 1.4 | Intact | SGTN4TSTK | |
| 73154 SGTN B 115.00 73234 CHIPP TP 115.00 1 | 221 | 91.8 | 221 | 99.1 | 7.3 | Intact | SOTHNGTN23T | |
| 73154 SGTN B 115.00 73234 CHIPP TP 115.00 1 | 221 | 90.9 | 221 | 98.3 | 7.4 | Intact | 1800-1860LNS | |

This document may contain Critical Energy Infrastructure Information -Do Not Release

| Dispatch Scenario - Shoulder Case, Post M-N, OPTION - Line #1238, ALL LINES IN, High Import(CT, SWCT) , NY-NE = 1000 | | | | | | | |
|---|---|---|---|---|---|---|---|
| Thermal Impact | | | | | | | |
| 1 | 2 | 3 | 4 | 5 | 6 | 7 | 8 |
| Monitored Element | Rating | Loading(%) | Rating | Loading(%) | (5)-(3) | | |
| ** From bus ** ** To bus ** CKT | MVA | Without Project | MVA | With Project | Impact (%) | Prior Outage | Contingency |
| No Thermal Violation | | | | | | | |

This document may contain Critical Energy Infrastructure Information -Do Not Release

| Dispatch Scenario - Shoulder Case, Post M-N, OPTION - Line #1238, ALL LINES IN, High Import(CT, SWCT) , NY-NE = -1000 | | | | | | | |
|---|---|---|---|---|---|---|---|
| Thermal Impact | | | | | | | |
| 1 | 2 | 3 | 4 | 5 | 6 | 7 | 8 |
| Monitored Element | Rating | Loading(%) | Rating | Loading(%) | (5)-(3) | | |
| ** From bus ** ** To bus ** CKT | MVA | Without Project | MVA | With Project | Impact (%) | Prior Outage | Contingency |
| No Thermal Violation | | | | | | | |

This document may contain Critical Energy Infrastructure Information -Do Not Release

Appendix

E

# N-2 Analysis – Detailed Results

This appendix contains N-2 analysis results of the following scenarios

- Shoulder Case with Project  Tapping Line #1238, Line #1191 Out, NY-NE interface at -1000MW
- Shoulder Case with Project  Tapping Line #1238, New Ring Bus-Frost Bridge Line Out, NY-NE interface at -1000MW
- Shoulder Case with Project  Tapping Line #1238, New Ring Bus-Carmel Hill Line Out, NY-NE interface at -1000MW
- Shoulder Case with Project  Tapping Line #1191, New Tap Point-Campville Line Out, NY-NE interface at -1000MW
- Shoulder Case with Project  Tapping Line #1191, Line #1921 Out, NY-NE interface at -1000MW



This document may contain Critical Energy Infrastructure Information -Do Not Release

| Dispatch Scenario - Shoulder Case, Post M-N, OPTION - Line #1191, New tap point-Campville Out, High Import(CT, SWCT) , NY-NE = -1000 | | | | | | | |
|---|---|---|---|---|---|---|---|
| Thermal Impact | | | | | | | |
| 1 | 2 | 3 | 4 | 5 | 6 | 7 | 8 |
| Monitored Element | Rating | Loading(%) | Rating | Loading(%) | (5)-(3) | | |
| ** From bus ** ** To bus ** CKT | MVA | Without Project | MVA | With Project | Impact (%) | Prior Outage | Contingency |
| 73234 CHIPP TP 115.00 73235 CHIP HIL 115.00 1 | 192 | 100.1 | 192 | 109.5 | 9.4 | Intact | 1784LINE |
| 73234 CHIPP TP 115.00 73235 CHIP HIL 115.00 1 | 192 | 100 | 192 | 109.5 | 9.5 | Intact | NBLMFBR22T |
| 73235 CHIP HIL 115.00 73240 THOMASTN 115.00 1 | 192 | 87 | 192 | 95.8 | 8.8 | Intact | 1784LINE |
| 73235 CHIP HIL 115.00 73240 THOMASTN 115.00 1 | 192 | 87 | 192 | 95.7 | 8.7 | Intact | NBLMFBR22T |

This document may contain Critical Energy Infrastructure Information -Do Not Release

| Dispatch Scenario - Shoulder Case, Post M-N, OPTION - Line #1191, Line #1921 Out, High Import(CT, SWCT) , NY-NE = -1000 | | | | | | | |
|---|---|---|---|---|---|---|---|
| Thermal Impact | | | | | | | |
| 1 | 2 | 3 | 4 | 5 | 6 | 7 | 8 |
| Monitored Element | Rating | Loading(%) | Rating | Loading(%) | (5)-(3) | | |
| ** From bus ** ** To bus ** CKT | MVA | Without Project | MVA | With Project | Impact (%) | Prior Outage | Contingency |
| No Thermal Violation | | | | | | | |

This document may contain Critical Energy Infrastructure Information -Do Not Release

| Dispatch Scenario - Shoulder Case, Post M-N, OPTION-Line #1238, Line #1191 Out, High Import(CT, SWCT) , NY-NE = -1000 | | | | | | | | |
|---|---|---|---|---|---|---|---|---|
| Thermal Impact | | | | | | | | |
| 1 | 2 | 3 | 4 | 5 | 6 | 7 | 8 |
| Monitored Element | Rating | Loading(%) | Rating | Loading(%) | (5)-(3) | | |
| ** From bus ** ** To bus ** CKT | MVA | Without Project | MVA | With Project | Impact (%) | Prior Outage | Contingency |
| 73234 CHIPP TP 115.00 73235 CHIP HIL 115.00 1 | 192 | 100.1 | 192 | 109.5 | 9.4 | Intact | 1784LINE |
| 73234 CHIPP TP 115.00 73235 CHIP HIL 115.00 1 | 192 | 100 | 192 | 109.5 | 9.5 | Intact | NBLMFBR22T |
| 73235 CHIP HIL 115.00 73240 THOMASTN 115.00 1 | 192 | 87 | 192 | 95.8 | 8.8 | Intact | 1784LINE |
| 73235 CHIP HIL 115.00 73240 THOMASTN 115.00 1 | 192 | 87 | 192 | 95.7 | 8.7 | Intact | NBLMFBR22T |

This document may contain Critical Energy Infrastructure Information -Do Not Release

| Dispatch Scenario - Shoulder Case, Post M-N, OPTION-Line #1238, New Ring Bus-Frost Bridge Out, High Import(CT, SWCT), NY-NE = -1000 | | | | | | | |
|---|---|---|---|---|---|---|---|
| Thermal Impact | | | | | | | |
| 1 | 2 | 3 | 4 | 5 | 6 | 7 | 8 |
| Monitored Element | Rating | Loading(%) | Rating | Loading(%) | (5)-(3) | | |
| ** From bus ** ** To bus ** CKT | MVA | Without Project | MVA | With Project | Impact (%) | Prior Outage | Contingency |
| No Thermal Violation | | | | | | | |

This document may contain Critical Energy Infrastructure Information -Do Not Release

| Dispatch Scenario - Shoulder Case, Post M-N, OPTION-Line #1238, New Ring Bus-Carmel Hill Out, High Import(CT, SWCT), NY-NE = -1000 | | | | | | | |
|---|---|---|---|---|---|---|---|
| Thermal Impact | | | | | | | |
| 1 | 2 | 3 | 4 | 5 | 6 | 7 | 8 |
| Monitored Element | Rating | Loading(%) | Rating | Loading(%) | (5)-(3) | | |
| ** From bus ** ** To bus ** CKT | MVA | Without Project | MVA | With Project | Impact (%) | Prior Outage | Contingency |
| No Thermal Violation | | | | | | | |

This document may contain Critical Energy Infrastructure Information -Do Not Release

Appendix

F

# Transfer Analysis Results

This appendix contains transfer analysis results of the following scenarios

**PEAK CASE**

- **2010-PK_1A-NY-NE=0**: Summer Peak-Dispatch Without Project NY-NE interface at 0 MW
- **2010-PK_1C-NY-NE=0**: Summer Peak-Dispatch Without Project, Sink OFF, NY-NE interface at 0 MW
- **2010-PK_1B-NY-NE=0_TAP1238**: Summer Peak-Dispatch With Project Tapping Line 1238, NY-NE interface at 0 MW
- **2010-PK_1B-NY-NE=0_TAP1191**: Summer Peak-Dispatch With Project Tapping Line 1191, NY-NE interface at 0 MW

**SHOULDER CASE**

- **2010-SH_1A-NY-NE=0**: Summer Shoulder-Dispatch Without Project NY-NE interface at 0 MW
- **2010-SH_1C-NY-NE=0**: Summer Shoulder-Dispatch Without Project, Sink OFF, NY-NE interface at 0 MW
- **2010-SH_1B-NY-NE=0_TAP1238**: Summer Shoulder-Dispatch With Project Tapping Line 1238, NY-NE interface at 0 MW
- **2010-SH_1B-NY-NE=0_TAP1191**: Summer Shoulder-Dispatch With Project Tapping Line 1191, NY-NE interface at 0 MW



This document may contain Critical Energy Infrastructure Information -Do Not Release

# FCITC Single Study

```
     MUST  8.0.1 -- Managing and Utilizing System Transmission --  MON, JAN 21 2008  14:06
     2005 NPCC LIB - PK CASE W/O PROJECT #191
     POST M-N, HIGHIMPORT(CT, SWCT), NY-NE 1000
Case.File   F:\ISO-NE\Watertown Biomass scope\Study\Transfer\P#191_PK_1A_NY-NE=0.sav
Subsys.File F:\ISO-NE\Watertown Biomass scope\Study\Transfer\Watertown_TransfAnalysis.SUB
Monit.File  F:\ISO-NE\Watertown Biomass scope\Study\Transfer\Watertown_TransferAnalysis.MON
Contin.File F:\ISO-NE\Watertown Biomass scope\Study\Transfer\Watertown_TransferAnalysis.con
Exclud.File none

Study transfer. From SOURCE_ROW     To SINK_SWCT_NNG . Transfer level -   2000.0 MW


 Violations report ordered by transfer capability. Total    56 violations

 Interface-1  Interface     3 SWCT-S          Init.Flow=     2248.08 TDF= 0.9060


 IntFce1       TDF     LODF <---------     Limiting constraint      ---------> <--------     Contingency description      --------> Ncon    PreShift  Rating     PTDF IntBase FnlBase
  2695.1   0.06823     -      73669 GRAND AV     115  73681 WEST RIV     115 1  C:GRNDAV2TSTK                                          604      224.3   258.0  0.05249    71.4    97.3
                                                                                  Open  73669 GRAND AV     115  73680 WATER ST     115 1
                                                                                  Open  73669 GRAND AV     115  73676 MILL RVR     115 1
  2695.1   0.06823     -      73669 GRAND AV     115  73681 WEST RIV     115 2  C:GRNDAV2TSTK                                          604      224.3   258.0  0.05249    71.4    97.3
                                                                                  Open  73669 GRAND AV     115  73680 WATER ST     115 1
                                                                                  Open  73669 GRAND AV     115  73676 MILL RVR     115 1
  2695.1   0.06823     -      73669 GRAND AV     115  73681 WEST RIV     115 1  C:GRNDAV2TSPS                                            5      224.3   258.0  0.05249    71.4    97.3
                                                                                  Open  73669 GRAND AV     115  73680 WATER ST     115 1
                                                                                  Open  73669 GRAND AV     115  73676 MILL RVR     115 1
  2695.1   0.06823     -      73669 GRAND AV     115  73681 WEST RIV     115 2  C:GRNDAV2TSPS                                            5      224.3   258.0  0.05249    71.4    97.3
                                                                                  Open  73669 GRAND AV     115  73680 WATER ST     115 1
                                                                                  Open  73669 GRAND AV     115  73676 MILL RVR     115 1
  2884.7   0.03954     -      73106 SOUTHGTN     345  73154 SGTN B       115 2  C:SGTN5TSTK                                            447      557.2   585.0  0.01477   277.9   288.3
                                                                                  Open  73104 FRSTBDGE     345  73106 SOUTHGTN     345 1
                                                                                  Open  73106 SOUTHGTN     345  73154 SGTN B       115 3
  2884.7   0.03954     -      73106 SOUTHGTN     345  73154 SGTN B       115 2  C:SGTN5TSTK-A                                          449      557.2   585.0  0.01477   277.9   288.3
                                                                                  Open  73104 FRSTBDGE     345  73106 SOUTHGTN     345 1
                                                                                  Open  73106 SOUTHGTN     345  73154 SGTN B       115 3
  3214.2   0.03609     -      73672 SACKETT      115  73673 SACKPHS      115 1  C:8003A-9003B                                          476       99.5   138.0  0.00699    70.4    77.8
                                                                                  Open  73669 GRAND AV     115  73681 WEST RIV     115 1
                                                                                  Open  73681 WEST RIV     115  73682 ELMWST A     115 1
                                                                                  Open  73682 ELMWST A     115  73684 ALLINGSA     115 1
                                                                                  Open  73682 ELMWST A     115  73742 ELMWEST     13.8 1
                                                                                  Open  73669 GRAND AV     115  73681 WEST RIV     115 2
                                                                                  Open  73681 WEST RIV     115  73683 ELMWST B     115 1
                                                                                  Open  73683 ELMWST B     115  73685 ALLINGSB     115 1
                                                                                  Open  73683 ELMWST B     115  73742 ELMWEST     13.8 1
  3217.0   0.03609     -      73673 SACKPHS      115  73675 MIX AVE      115 1  C:8003A-9003B                                          476       99.4   138.0  0.00699    70.3    77.7
                                                                                  Open  73669 GRAND AV     115  73681 WEST RIV     115 1
                                                                                  Open  73681 WEST RIV     115  73682 ELMWST A     115 1
                                                                                  Open  73682 ELMWST A     115  73684 ALLINGSA     115 1
                                                                                  Open  73682 ELMWST A     115  73742 ELMWEST     13.8 1
                                                                                  Open  73669 GRAND AV     115  73681 WEST RIV     115 2
                                                                                  Open  73681 WEST RIV     115  73683 ELMWST B     115 1
                                                                                  Open  73683 ELMWST B     115  73685 ALLINGSB     115 1
                                                                                  Open  73683 ELMWST B     115  73742 ELMWEST     13.8 1
```



This document may contain Critical Energy Infrastructure Information -Do Not Release

| | | | | | | | | | | | | | | | | | | | | | |
|---|---|---|---|---|---|---|---|---|---|---|---|---|---|---|---|---|---|---|---|---|---|
| 3310.0 | -0.46564 | - | 73124 | BHAUTO | 345 | 72925 | LUDLOW | 345 | 1 | C:347LINE | | | | | 214 | -1058.3 | -1604.0 | -0.28711 | -795.4 | -1131.9 |
| | | | | | | | | | | Open | 73118 | CTRI347 | 345 | 71336 | SHERMAN | 345 | 1 | | | |
| | | | | | | | | | | Open | 73118 | CTRI347 | 345 | 73123 | KILLINGL | 345 | 1 | | | |
| 3319.6 | -0.46558 | - | 73124 | BHAUTO | 345 | 72925 | LUDLOW | 345 | 1 | C:LKRD2TSTK | | | | | 414 | -1053.4 | -1604.0 | -0.28711 | -795.4 | -1134.9 |
| | | | | | | | | | | Open | 73119 | LAKEROAD | 345 | 73565 | LAKERD#1 | 21.0 | 1 | | | |
| | | | | | | | | | | Open | 73123 | KILLINGL | 345 | 73304 | KILLINGL | 115 | 1 | | | |
| | | | | | | | | | | Open | 73119 | LAKEROAD | 345 | 73123 | KILLINGL | 345 | 1 | | | |
| 3319.6* | -0.46558 | - | 73124 | BHAUTO | 345 | 72925 | LUDLOW | 345 | 1 | C:3348LINE | | | | | 412 | -1053.4 | -1604.0 | -0.28711 | -795.4 | -1134.9 |
| | | | | | | | | | | Open | 73123 | KILLINGL | 345 | 73304 | KILLINGL | 115 | 1 | | | |
| | | | | | | | | | | Open | 73119 | LAKEROAD | 345 | 73123 | KILLINGL | 345 | 1 | | | |
| 3400.9* | 0.10108 | - | 73669 | GRAND AV | 115 | 73681 | WEST RIV | 115 | 2 | C:WRIVER1TSPS | | | | | 11 | 129.4 | 258.0 | 0.05249 | 71.4 | 138.1 |
| | | | | | | | | | | Open | 73677 | UNION AV | 115 | 73680 | WATER ST | 115 | 1 | | | |
| | | | | | | | | | | Open | 73669 | GRAND AV | 115 | 73681 | WEST RIV | 115 | 1 | | | |
| | | | | | | | | | | Open | 73681 | WEST RIV | 115 | 73682 | ELMWST A | 115 | 1 | | | |
| | | | | | | | | | | Open | 73682 | ELMWST A | 115 | 73684 | ALLINGSA | 115 | 1 | | | |
| 3401.0* | 0.10110 | - | 73669 | GRAND AV | 115 | 73681 | WEST RIV | 115 | 1 | C:WRIVER2TSPS | | | | | 14 | 129.4 | 258.0 | 0.05249 | 71.4 | 138.2 |
| | | | | | | | | | | Open | 73677 | UNION AV | 115 | 73680 | WATER ST | 115 | 1 | | | |
| | | | | | | | | | | Open | 73669 | GRAND AV | 115 | 73681 | WEST RIV | 115 | 2 | | | |
| | | | | | | | | | | Open | 73681 | WEST RIV | 115 | 73683 | ELMWST B | 115 | 1 | | | |
| | | | | | | | | | | Open | 73683 | ELMWST B | 115 | 73685 | ALLINGSB | 115 | 1 | | | |
| 3535.5 | 0.03609 | - | 73672 | SACKETT | 115 | 73673 | SACKPHS | 115 | 1 | C:8804A-8904BD | | | | | 479 | 86.7 | 138.0 | 0.00699 | 70.4 | 80.3 |
| | | | | | | | | | | Open | 73684 | ALLINGSA | 115 | 73686 | WDMONT A | 115 | 1 | | | |
| | | | | | | | | | | Open | 73684 | ALLINGSA | 115 | 73744 | ALLINGS | 13.8 | 1 | | | |
| | | | | | | | | | | Open | 73685 | ALLINGSB | 115 | 73687 | WDMONT B | 115 | 1 | | | |
| | | | | | | | | | | Open | 73685 | ALLINGSB | 115 | 73744 | ALLINGS | 13.8 | 1 | | | |
| 3538.4 | 0.03609 | - | 73673 | SACKPHS | 115 | 73675 | MIX AVE | 115 | 1 | C:8804A-8904BD | | | | | 479 | 86.6 | 138.0 | 0.00699 | 70.3 | 80.2 |
| | | | | | | | | | | Open | 73684 | ALLINGSA | 115 | 73686 | WDMONT A | 115 | 1 | | | |
| | | | | | | | | | | Open | 73684 | ALLINGSA | 115 | 73744 | ALLINGS | 13.8 | 1 | | | |
| | | | | | | | | | | Open | 73685 | ALLINGSB | 115 | 73687 | WDMONT B | 115 | 1 | | | |
| | | | | | | | | | | Open | 73685 | ALLINGSB | 115 | 73744 | ALLINGS | 13.8 | 1 | | | |
| 3651.3 | -0.28711 | - | 73124 | BHAUTO | 345 | 72925 | LUDLOW | 345 | 1 | Base Case | | | | | | -795.4 | -1240.0 | | | |
| 3707.9 | 0.05547 | - | 73183 | SHAWSHIL | 115 | 73185 | BUNKER H | 115 | 1 | C:FROSTBR27T | | | | | 586 | 163.6 | 253.0 | 0.03238 | 99.9 | 152.1 |
| | | | | | | | | | | Open | 73189 | FREIGHT | 115 | 73202 | FROST BR | 115 | 1 | | | |
| | | | | | | | | | | Open | 73164 | BALDWNJA | 115 | 73186 | BALDWINA | 115 | 1 | | | |
| | | | | | | | | | | Open | 73164 | BALDWNJA | 115 | 73202 | FROST BR | 115 | 1 | | | |
| | | | | | | | | | | Open | 73164 | BALDWNJA | 115 | 73333 | JACKSHL | 115 | 1 | | | |
| | | | | | | | | | | Open | 73186 | BALDWINA | 115 | 73386 | BALDWINA | 13.8 | 1 | | | |
| 3782.0 | 0.03129 | - | 73168 | GLNBROOK | 115 | 73294 | GLNBRK J | 115 | 1 | C:1440-1450DCT | | | | | 262 | 386.0 | 439.0 | 0.02996 | 85.2 | 136.0 |
| | | | | | | | | | | Open | 73162 | WATERSDE | 115 | 73168 | GLNBROOK | 115 | 1 | | | |
| | | | | | | | | | | Open | 73167 | SO.END | 115 | 73168 | GLNBROOK | 115 | 1 | | | |
| 3818.7 | -0.48388 | - | 73118 | CTRI347 | 345 | 71336 | SHERMAN | 345 | 1 | C:LUDLW3TSTBKR | | | | | 335 | -779.2 | -1618.0 | -0.32201 | -474.5 | -1032.7 |
| | | | | | | | | | | Open | 72925 | LUDLOW | 345 | 73124 | BHAUTO | 345 | 1 | | | |
| | | | | | | | | | | Open | 72925 | LUDLOW | 345 | 72929 | BELCH301 | 345 | 1 | | | |
| | | | | | | | | | | Open | 72925 | LUDLOW | 345 | 72972 | LUDLOW | 115 | 1 | | | |
| | | | | | | | | | | Open | 72929 | BELCH301 | 345 | 71796 | CARP HL | 345 | 1 | | | |
| | | | | | | | | | | Open | 71796 | CARP HL | 345 | 71797 | MILLBURY | 345 | 1 | | | |
| 3829.4 | -0.45079 | -0.44854 | 73118 | CTRI347 | 345 | 71336 | SHERMAN | 345 | 1 | C:395NLINE | | | | | 232 | -831.3 | -1618.0 | -0.32201 | -474.5 | -1036.5 |
| | | | | | | | | | | Open | 72925 | LUDLOW | 345 | 73124 | BHAUTO | 345 | 1 | | | |
| 3838.0* | -0.48063 | - | 73118 | CTRI347 | 345 | 71336 | SHERMAN | 345 | 1 | C:LUDLW5TBF | | | | | 336 | -774.6 | -1618.0 | -0.32201 | -474.5 | -1039.6 |
| | | | | | | | | | | Open | 72925 | LUDLOW | 345 | 72929 | BELCH301 | 345 | 1 | | | |
| | | | | | | | | | | Open | 72925 | LUDLOW | 345 | 72972 | LUDLOW | 115 | 1 | | | |
| | | | | | | | | | | Open | 72929 | BELCH301 | 345 | 71796 | CARP HL | 345 | 1 | | | |
| | | | | | | | | | | Open | 71796 | CARP HL | 345 | 71797 | MILLBURY | 345 | 1 | | | |
| | | | | | | | | | | Open | 72925 | LUDLOW | 345 | 72926 | NRTHFLD | 345 | 1 | | | |
| 3938.5 | 0.22810 | - | 73109 | MONTVILE | 345 | 73113 | HADDM NK | 345 | 1 | C:310-348DCT | | | | | 312 | 1486.4 | 1912.0 | 0.15067 | 778.7 | 1059.8 |
| | | | | | | | | | | Open | 73110 | MILLSTNE | 345 | 73112 | MANCHSTR | 345 | 1 | | | |
| | | | | | | | | | | Open | 73121 | HADAUTO | 345 | 73230 | HADDAM | 115 | 1 | | | |



This document may contain Critical Energy Infrastructure Information -Do Not Release

| | | | | | | | | | | | | | | | | | | | | | |
|---|---|---|---|---|---|---|---|---|---|---|---|---|---|---|---|---|---|---|---|---|---|
| | | | | | | | | | | Open | 73121 | HADAUTO | 345 | 73295 | BESECK | 345 | 1 | | | | |
| | | | | | | | | | | Open | 73110 | MILLSTNE | 345 | 73121 | HADAUTO | 345 | 1 | | | | |
| 3971.9 | 0.03134 | - | 73244 | N.BLMFLD | 115 | 73288 | NESMBY | 115 | 1 | Base Case | | | | | | | | 161.4 | 221.0 | | |
| 3972.8* | 0.03617 | - | 73672 | SACKETT | 115 | 73673 | SACKPHS | 115 | 1 | C:8005A-9005B | | | | | | 477 | | 69.2 | 138.0 | 0.00699 | 70.4 | 83.7 |
| | | | | | | | | | | Open | 73690 | DEVON178 | 115 | 73195 | DEVON | 115 | 1 | | | | |
| | | | | | | | | | | Open | 73688 | MILVON A | 115 | 73690 | DEVON178 | 115 | 1 | | | | |
| | | | | | | | | | | Open | 73686 | WDMONT A | 115 | 73688 | MILVON A | 115 | 1 | | | | |
| | | | | | | | | | | Open | 73688 | MILVON A | 115 | 73748 | MILVON | 13.8 | 1 | | | | |
| | | | | | | | | | | Open | 73686 | WDMONT A | 115 | 73746 | WOODMONT | 13.8 | 1 | | | | |
| | | | | | | | | | | Open | 73689 | MILVON B | 115 | 73691 | DEVON179 | 115 | 1 | | | | |
| | | | | | | | | | | Open | 73687 | WDMONT B | 115 | 73689 | MILVON B | 115 | 1 | | | | |
| | | | | | | | | | | Open | 73689 | MILVON B | 115 | 73748 | MILVON | 13.8 | 1 | | | | |
| | | | | | | | | | | Open | 73687 | WDMONT B | 115 | 73746 | WOODMONT | 13.8 | 1 | | | | |
| 3975.6* | 0.03617 | - | 73673 | SACKPHS | 115 | 73675 | MIX AVE | 115 | 1 | C:8005A-9005B | | | | | | 477 | | 69.0 | 138.0 | 0.00699 | 70.3 | 83.6 |
| | | | | | | | | | | Open | 73690 | DEVON178 | 115 | 73195 | DEVON | 115 | 1 | | | | |
| | | | | | | | | | | Open | 73688 | MILVON A | 115 | 73690 | DEVON178 | 115 | 1 | | | | |
| | | | | | | | | | | Open | 73686 | WDMONT A | 115 | 73688 | MILVON A | 115 | 1 | | | | |
| | | | | | | | | | | Open | 73688 | MILVON A | 115 | 73748 | MILVON | 13.8 | 1 | | | | |
| | | | | | | | | | | Open | 73686 | WDMONT A | 115 | 73746 | WOODMONT | 13.8 | 1 | | | | |
| | | | | | | | | | | Open | 73689 | MILVON B | 115 | 73691 | DEVON179 | 115 | 1 | | | | |
| | | | | | | | | | | Open | 73687 | WDMONT B | 115 | 73689 | MILVON B | 115 | 1 | | | | |
| | | | | | | | | | | Open | 73689 | MILVON B | 115 | 73748 | MILVON | 13.8 | 1 | | | | |
| | | | | | | | | | | Open | 73687 | WDMONT B | 115 | 73746 | WOODMONT | 13.8 | 1 | | | | |
| 4001.3 | 0.03640 | 0.27694 | 73247 | FARMNGTN | 115 | 73254 | NEWINGTN | 115 | 1 | C:1773LINE | | | | | | 138 | | 93.6 | 164.0 | 0.02564 | 53.9 | 103.5 |
| | | | | | | | | | | Open | 73246 | S.MEADOW | 115 | 73257 | ROCKY HL | 115 | 1 | | | | |
| 4001.3 | 0.03640 | - | 73247 | FARMNGTN | 115 | 73254 | NEWINGTN | 115 | 1 | C:SOMEADSTK10T | | | | | | 707 | | 93.6 | 164.0 | 0.02564 | 53.9 | 103.5 |
| | | | | | | | | | | Open | 73246 | S.MEADOW | 115 | 73257 | ROCKY HL | 115 | 1 | | | | |
| | | | | | | | | | | Open | 73257 | ROCKY HL | 115 | 73428 | ROCKY HL | 23.0 | 1 | | | | |
| | | | | | | | | | | Open | 73246 | S.MEADOW | 115 | 73549 | SMD1112J | 13.8 | 1 | | | | |
| | | | | | | | | | | Open | 73246 | S.MEADOW | 115 | 73547 | CRRA PF | 11.5 | 1 | | | | |
| 4023.8* | 0.03642 | - | 73247 | FARMNGTN | 115 | 73254 | NEWINGTN | 115 | 1 | C:SOMEADSTK8T | | | | | | 706 | | 92.6 | 164.0 | 0.02564 | 53.9 | 104.1 |
| | | | | | | | | | | Open | 73246 | S.MEADOW | 115 | 73257 | ROCKY HL | 115 | 1 | | | | |
| | | | | | | | | | | Open | 73257 | ROCKY HL | 115 | 73428 | ROCKY HL | 23.0 | 1 | | | | |
| | | | | | | | | | | Open | 73246 | S.MEADOW | 115 | 73549 | SMD1112J | 13.8 | 1 | | | | |
| | | | | | | | | | | Open | 73246 | S.MEADOW | 115 | 73258 | BLOOMFLD | 115 | 1 | | | | |
| 4031.6 | 0.04336 | -0.04434 | 73244 | N.BLMFLD | 115 | 73288 | NESMBY | 115 | 1 | C:353LINE | | | | | | 219 | | 198.6 | 284.0 | 0.03134 | 161.4 | 223.1 |
| | | | | | | | | | | Open | 73107 | SCOVL RK | 345 | 73500 | KLEENTAP | 345 | 1 | | | | |
| 4049.9 | 0.10850 | - | 73681 | WEST RIV | 115 | 73682 | ELMWST A | 115 | 1 | C:GRNDAV5TSTK | | | | | | 607 | | 172.2 | 388.0 | 0.07337 | 81.3 | 227.2 |
| | | | | | | | | | | Open | 73669 | GRAND AV | 115 | 73681 | WEST RIV | 115 | 2 | | | | |
| | | | | | | | | | | Open | 73681 | WEST RIV | 115 | 73683 | ELMWST B | 115 | 1 | | | | |
| | | | | | | | | | | Open | 73683 | ELMWST B | 115 | 73685 | ALLINGSB | 115 | 1 | | | | |
| | | | | | | | | | | Open | 73669 | GRAND AV | 115 | 73672 | SACKETT | 115 | 1 | | | | |
| 4050.0 | 0.10848 | - | 73681 | WEST RIV | 115 | 73683 | ELMWST B | 115 | 1 | C:GRNDAV6TSTK | | | | | | 608 | | 172.2 | 388.0 | 0.07334 | 81.4 | 227.3 |
| | | | | | | | | | | Open | 73669 | GRAND AV | 115 | 73672 | SACKETT | 115 | 1 | | | | |
| | | | | | | | | | | Open | 73669 | GRAND AV | 115 | 73681 | WEST RIV | 115 | 1 | | | | |
| | | | | | | | | | | Open | 73681 | WEST RIV | 115 | 73682 | ELMWST A | 115 | 1 | | | | |
| | | | | | | | | | | Open | 73682 | ELMWST A | 115 | 73684 | ALLINGSA | 115 | 1 | | | | |



This document may contain Critical Energy Infrastructure Information -Do Not Release

# FCITC Single Study

```
     MUST  8.0.1 -- Managing and Utilizing System Transmission --  MON, JAN 21 2008  14:09
     2005 NPCC LIB - PK CASE W/ PROJECT #191
     POST M-N, HIGHIMPORT(CT, SWCT), NY-NE 1000, TAP #1191
Case.File   F:\ISO-NE\Watertown Biomass scope\Study\Transfer\P#191_PK_1B_NY-NE=0_TAP1191.sav
Subsys.File F:\ISO-NE\Watertown Biomass scope\Study\Transfer\Watertown_TransfAnalysis.SUB
Monit.File  F:\ISO-NE\Watertown Biomass scope\Study\Transfer\Watertown_TransferAnalysis.MON
Contin.File F:\ISO-NE\Watertown Biomass scope\Study\Transfer\Watertown_TransferAnalysis.con
Exclud.File none

Study transfer. From SOURCE_ROW     To SINK_SWCT_NNG . Transfer level -   2000.0 MW


 Violations report ordered by transfer capability. Total    56 violations

 Interface-1  Interface     3 SWCT-S          Init.Flow=     2247.52 TDF= 0.9060


 IntFce1       TDF     LODF <---------     Limiting constraint      ---------> <--------     Contingency description      --------> Ncon    PreShift  Rating     PTDF IntBase FnlBase
  2697.9   0.06823     -      73669 GRAND AV     115  73681 WEST RIV     115 1  C:GRNDAV2TSTK                                          605      224.1   258.0  0.05249    71.1    97.2
                                                                                  Open  73669 GRAND AV     115  73680 WATER ST     115 1
                                                                                  Open  73669 GRAND AV     115  73676 MILL RVR     115 1
  2697.9   0.06823     -      73669 GRAND AV     115  73681 WEST RIV     115 2  C:GRNDAV2TSTK                                          605      224.1   258.0  0.05249    71.1    97.2
                                                                                  Open  73669 GRAND AV     115  73680 WATER ST     115 1
                                                                                  Open  73669 GRAND AV     115  73676 MILL RVR     115 1
  2697.9   0.06823     -      73669 GRAND AV     115  73681 WEST RIV     115 1  C:GRNDAV2TSPS                                            5      224.1   258.0  0.05249    71.1    97.2
                                                                                  Open  73669 GRAND AV     115  73680 WATER ST     115 1
                                                                                  Open  73669 GRAND AV     115  73676 MILL RVR     115 1
  2697.9   0.06823     -      73669 GRAND AV     115  73681 WEST RIV     115 2  C:GRNDAV2TSPS                                            5      224.1   258.0  0.05249    71.1    97.2
                                                                                  Open  73669 GRAND AV     115  73680 WATER ST     115 1
                                                                                  Open  73669 GRAND AV     115  73676 MILL RVR     115 1
  2776.6   0.03954     -      73106 SOUTHGTN     345  73154 SGTN B       115 2  C:SGTN5TSTK                                            446      561.9   585.0  0.01477   281.4   290.0
                                                                                  Open  73104 FRSTBDGE     345  73106 SOUTHGTN     345 1
                                                                                  Open  73106 SOUTHGTN     345  73154 SGTN B       115 3
  2776.6   0.03954     -      73106 SOUTHGTN     345  73154 SGTN B       115 2  C:SGTN5TSTK-A                                          448      561.9   585.0  0.01477   281.4   290.0
                                                                                  Open  73104 FRSTBDGE     345  73106 SOUTHGTN     345 1
                                                                                  Open  73106 SOUTHGTN     345  73154 SGTN B       115 3
  3215.8   0.03609     -      73672 SACKETT      115  73673 SACKPHS      115 1  C:8003A-9003B                                          477       99.4   138.0  0.00699    70.4    77.9
                                                                                  Open  73669 GRAND AV     115  73681 WEST RIV     115 1
                                                                                  Open  73681 WEST RIV     115  73682 ELMWST A     115 1
                                                                                  Open  73682 ELMWST A     115  73684 ALLINGSA     115 1
                                                                                  Open  73682 ELMWST A     115  73742 ELMWEST     13.8 1
                                                                                  Open  73669 GRAND AV     115  73681 WEST RIV     115 2
                                                                                  Open  73681 WEST RIV     115  73683 ELMWST B     115 1
                                                                                  Open  73683 ELMWST B     115  73685 ALLINGSB     115 1
                                                                                  Open  73683 ELMWST B     115  73742 ELMWEST     13.8 1
  3218.6   0.03609     -      73673 SACKPHS      115  73675 MIX AVE      115 1  C:8003A-9003B                                          477       99.3   138.0  0.00699    70.3    77.8
                                                                                  Open  73669 GRAND AV     115  73681 WEST RIV     115 1
                                                                                  Open  73681 WEST RIV     115  73682 ELMWST A     115 1
                                                                                  Open  73682 ELMWST A     115  73684 ALLINGSA     115 1
                                                                                  Open  73682 ELMWST A     115  73742 ELMWEST     13.8 1
                                                                                  Open  73669 GRAND AV     115  73681 WEST RIV     115 2
                                                                                  Open  73681 WEST RIV     115  73683 ELMWST B     115 1
                                                                                  Open  73683 ELMWST B     115  73685 ALLINGSB     115 1
                                                                                  Open  73683 ELMWST B     115  73742 ELMWEST     13.8 1
```



This document may contain Critical Energy Infrastructure Information -Do Not Release

| | | | | | | | | | | | | | | | | | | | | | |
|---|---|---|---|---|---|---|---|---|---|---|---|---|---|---|---|---|---|---|---|---|---|
| 3307.6 | -0.46564 | - | 73124 | BHAUTO | 345 | 72925 | LUDLOW | 345 | 1 | C:347LINE | | | | | 213 | -1059.2 | -1604.0 | -0.28711 | -795.8 | -1131.7 |
| | | | | | | | | | | Open | 73118 | CTRI347 | 345 | 71336 | SHERMAN | 345 | 1 | | | |
| | | | | | | | | | | Open | 73118 | CTRI347 | 345 | 73123 | KILLINGL | 345 | 1 | | | |
| 3317.2 | -0.46558 | - | 73124 | BHAUTO | 345 | 72925 | LUDLOW | 345 | 1 | C:LKRD2TSTK | | | | | 413 | -1054.3 | -1604.0 | -0.28711 | -795.8 | -1134.7 |
| | | | | | | | | | | Open | 73119 | LAKEROAD | 345 | 73565 | LAKERD#1 | 21.0 | 1 | | | |
| | | | | | | | | | | Open | 73123 | KILLINGL | 345 | 73304 | KILLINGL | 115 | 1 | | | |
| | | | | | | | | | | Open | 73119 | LAKEROAD | 345 | 73123 | KILLINGL | 345 | 1 | | | |
| 3317.2* | -0.46558 | - | 73124 | BHAUTO | 345 | 72925 | LUDLOW | 345 | 1 | C:3348LINE | | | | | 411 | -1054.3 | -1604.0 | -0.28711 | -795.8 | -1134.7 |
| | | | | | | | | | | Open | 73123 | KILLINGL | 345 | 73304 | KILLINGL | 115 | 1 | | | |
| | | | | | | | | | | Open | 73119 | LAKEROAD | 345 | 73123 | KILLINGL | 345 | 1 | | | |
| 3404.1* | 0.10108 | - | 73669 | GRAND AV | 115 | 73681 | WEST RIV | 115 | 2 | C:WRIVER1TSPS | | | | | 11 | 129.0 | 258.0 | 0.05249 | 71.1 | 138.1 |
| | | | | | | | | | | Open | 73677 | UNION AV | 115 | 73680 | WATER ST | 115 | 1 | | | |
| | | | | | | | | | | Open | 73669 | GRAND AV | 115 | 73681 | WEST RIV | 115 | 1 | | | |
| | | | | | | | | | | Open | 73681 | WEST RIV | 115 | 73682 | ELMWST A | 115 | 1 | | | |
| | | | | | | | | | | Open | 73682 | ELMWST A | 115 | 73684 | ALLINGSA | 115 | 1 | | | |
| 3404.2* | 0.10110 | - | 73669 | GRAND AV | 115 | 73681 | WEST RIV | 115 | 1 | C:WRIVER2TSPS | | | | | 14 | 128.9 | 258.0 | 0.05249 | 71.1 | 138.2 |
| | | | | | | | | | | Open | 73677 | UNION AV | 115 | 73680 | WATER ST | 115 | 1 | | | |
| | | | | | | | | | | Open | 73669 | GRAND AV | 115 | 73681 | WEST RIV | 115 | 2 | | | |
| | | | | | | | | | | Open | 73681 | WEST RIV | 115 | 73683 | ELMWST B | 115 | 1 | | | |
| | | | | | | | | | | Open | 73683 | ELMWST B | 115 | 73685 | ALLINGSB | 115 | 1 | | | |
| 3537.1 | 0.03609 | - | 73672 | SACKETT | 115 | 73673 | SACKPHS | 115 | 1 | C:8804A-8904BD | | | | | 480 | 86.6 | 138.0 | 0.00699 | 70.4 | 80.4 |
| | | | | | | | | | | Open | 73684 | ALLINGSA | 115 | 73686 | WDMONT A | 115 | 1 | | | |
| | | | | | | | | | | Open | 73684 | ALLINGSA | 115 | 73744 | ALLINGS | 13.8 | 1 | | | |
| | | | | | | | | | | Open | 73685 | ALLINGSB | 115 | 73687 | WDMONT B | 115 | 1 | | | |
| | | | | | | | | | | Open | 73685 | ALLINGSB | 115 | 73744 | ALLINGS | 13.8 | 1 | | | |
| 3540.0 | 0.03609 | - | 73673 | SACKPHS | 115 | 73675 | MIX AVE | 115 | 1 | C:8804A-8904BD | | | | | 480 | 86.5 | 138.0 | 0.00699 | 70.3 | 80.3 |
| | | | | | | | | | | Open | 73684 | ALLINGSA | 115 | 73686 | WDMONT A | 115 | 1 | | | |
| | | | | | | | | | | Open | 73684 | ALLINGSA | 115 | 73744 | ALLINGS | 13.8 | 1 | | | |
| | | | | | | | | | | Open | 73685 | ALLINGSB | 115 | 73687 | WDMONT B | 115 | 1 | | | |
| | | | | | | | | | | Open | 73685 | ALLINGSB | 115 | 73744 | ALLINGS | 13.8 | 1 | | | |
| 3649.4 | -0.28711 | - | 73124 | BHAUTO | 345 | 72925 | LUDLOW | 345 | 1 | Base Case | | | | | | -795.8 | -1240.0 | | | |
| 3685.7 | 0.05547 | - | 73183 | SHAWSHIL | 115 | 73185 | BUNKER H | 115 | 1 | C:FROSTBR27T | | | | | 587 | 165.0 | 253.0 | 0.03238 | 100.6 | 152.0 |
| | | | | | | | | | | Open | 73189 | FREIGHT | 115 | 73202 | FROST BR | 115 | 1 | | | |
| | | | | | | | | | | Open | 73164 | BALDWNJA | 115 | 73186 | BALDWINA | 115 | 1 | | | |
| | | | | | | | | | | Open | 73164 | BALDWNJA | 115 | 73202 | FROST BR | 115 | 1 | | | |
| | | | | | | | | | | Open | 73164 | BALDWNJA | 115 | 73333 | JACKSHL | 115 | 1 | | | |
| | | | | | | | | | | Open | 73186 | BALDWINA | 115 | 73386 | BALDWINA | 13.8 | 1 | | | |
| 3781.6 | 0.03129 | - | 73168 | GLNBROOK | 115 | 73294 | GLNBRK J | 115 | 1 | C:1440-1450DCT | | | | | 261 | 386.0 | 439.0 | 0.02996 | 85.2 | 136.0 |
| | | | | | | | | | | Open | 73162 | WATERSDE | 115 | 73168 | GLNBROOK | 115 | 1 | | | |
| | | | | | | | | | | Open | 73167 | SO.END | 115 | 73168 | GLNBROOK | 115 | 1 | | | |
| 3815.6 | -0.48388 | - | 73118 | CTRI347 | 345 | 71336 | SHERMAN | 345 | 1 | C:LUDLW3TSTBKR | | | | | 334 | -780.6 | -1618.0 | -0.32201 | -475.5 | -1032.8 |
| | | | | | | | | | | Open | 72925 | LUDLOW | 345 | 73124 | BHAUTO | 345 | 1 | | | |
| | | | | | | | | | | Open | 72925 | LUDLOW | 345 | 72929 | BELCH301 | 345 | 1 | | | |
| | | | | | | | | | | Open | 72925 | LUDLOW | 345 | 72972 | LUDLOW | 115 | 1 | | | |
| | | | | | | | | | | Open | 72929 | BELCH301 | 345 | 71796 | CARP HL | 345 | 1 | | | |
| | | | | | | | | | | Open | 71796 | CARP HL | 345 | 71797 | MILLBURY | 345 | 1 | | | |
| 3826.5 | -0.45079 | -0.44854 | 73118 | CTRI347 | 345 | 71336 | SHERMAN | 345 | 1 | C:395NLINE | | | | | 231 | -832.4 | -1618.0 | -0.32201 | -475.5 | -1036.6 |
| | | | | | | | | | | Open | 72925 | LUDLOW | 345 | 73124 | BHAUTO | 345 | 1 | | | |
| 3834.7* | -0.48063 | - | 73118 | CTRI347 | 345 | 71336 | SHERMAN | 345 | 1 | C:LUDLW5TBF | | | | | 335 | -776.0 | -1618.0 | -0.32201 | -475.5 | -1039.6 |
| | | | | | | | | | | Open | 72925 | LUDLOW | 345 | 72929 | BELCH301 | 345 | 1 | | | |
| | | | | | | | | | | Open | 72925 | LUDLOW | 345 | 72972 | LUDLOW | 115 | 1 | | | |
| | | | | | | | | | | Open | 72929 | BELCH301 | 345 | 71796 | CARP HL | 345 | 1 | | | |
| | | | | | | | | | | Open | 71796 | CARP HL | 345 | 71797 | MILLBURY | 345 | 1 | | | |
| | | | | | | | | | | Open | 72925 | LUDLOW | 345 | 72926 | NRTHFLD | 345 | 1 | | | |
| 3867.0 | 0.03134 | - | 73244 | N.BLMFLD | 115 | 73288 | NESMBY | 115 | 1 | Base Case | | | | | | 165.0 | 221.0 | | | |
| 3937.5 | 0.22810 | - | 73109 | MONTVILE | 345 | 73113 | HADDM NK | 345 | 1 | C:310-348DCT | | | | | 311 | 1486.5 | 1912.0 | 0.15067 | 778.8 | 1059.8 |
| | | | | | | | | | | Open | 73110 | MILLSTNE | 345 | 73112 | MANCHSTR | 345 | 1 | | | |



This document may contain Critical Energy Infrastructure Information -Do Not Release

| | | | | | | | | | | | | | | | | | | | | | |
|---|---|---|---|---|---|---|---|---|---|---|---|---|---|---|---|---|---|---|---|---|---|
| | | | | | | | | | Open | 73121 | HADAUTO | 345 | 73230 | HADDAM | 115 | 1 | | | | | |
| | | | | | | | | | Open | 73121 | HADAUTO | 345 | 73295 | BESECK | 345 | 1 | | | | | |
| | | | | | | | | | Open | 73110 | MILLSTNE | 345 | 73121 | HADAUTO | 345 | 1 | | | | | |
| 3956.3 | 0.04336 | -0.04434 | 73244 | N.BLMFLD | 115 | 73288 | NESMBY | 115 1 | C:353LINE | | | | | | 218 | | 202.2 | 284.0 | 0.03134 | 165.0 | 224.1 |
| | | | | | | | | | Open | 73107 | SCOVL RK | 345 | 73500 | KLEENTAP | 345 | 1 | | | | | |
| 3974.3* | 0.03617 | - | 73672 | SACKETT | 115 | 73673 | SACKPHS | 115 1 | C:8005A-9005B | | | | | | 478 | | 69.1 | 138.0 | 0.00699 | 70.4 | 83.7 |
| | | | | | | | | | Open | 73690 | DEVON178 | 115 | 73195 | DEVON | 115 | 1 | | | | | |
| | | | | | | | | | Open | 73688 | MILVON A | 115 | 73690 | DEVON178 | 115 | 1 | | | | | |
| | | | | | | | | | Open | 73686 | WDMONT A | 115 | 73688 | MILVON A | 115 | 1 | | | | | |
| | | | | | | | | | Open | 73688 | MILVON A | 115 | 73748 | MILVON | 13.8 | 1 | | | | | |
| | | | | | | | | | Open | 73686 | WDMONT A | 115 | 73746 | WOODMONT | 13.8 | 1 | | | | | |
| | | | | | | | | | Open | 73689 | MILVON B | 115 | 73691 | DEVON179 | 115 | 1 | | | | | |
| | | | | | | | | | Open | 73687 | WDMONT B | 115 | 73689 | MILVON B | 115 | 1 | | | | | |
| | | | | | | | | | Open | 73689 | MILVON B | 115 | 73748 | MILVON | 13.8 | 1 | | | | | |
| | | | | | | | | | Open | 73687 | WDMONT B | 115 | 73746 | WOODMONT | 13.8 | 1 | | | | | |
| 3977.2* | 0.03617 | - | 73673 | SACKPHS | 115 | 73675 | MIX AVE | 115 1 | C:8005A-9005B | | | | | | 478 | | 69.0 | 138.0 | 0.00699 | 70.3 | 83.6 |
| | | | | | | | | | Open | 73690 | DEVON178 | 115 | 73195 | DEVON | 115 | 1 | | | | | |
| | | | | | | | | | Open | 73688 | MILVON A | 115 | 73690 | DEVON178 | 115 | 1 | | | | | |
| | | | | | | | | | Open | 73686 | WDMONT A | 115 | 73688 | MILVON A | 115 | 1 | | | | | |
| | | | | | | | | | Open | 73688 | MILVON A | 115 | 73748 | MILVON | 13.8 | 1 | | | | | |
| | | | | | | | | | Open | 73686 | WDMONT A | 115 | 73746 | WOODMONT | 13.8 | 1 | | | | | |
| | | | | | | | | | Open | 73689 | MILVON B | 115 | 73691 | DEVON179 | 115 | 1 | | | | | |
| | | | | | | | | | Open | 73687 | WDMONT B | 115 | 73689 | MILVON B | 115 | 1 | | | | | |
| | | | | | | | | | Open | 73689 | MILVON B | 115 | 73748 | MILVON | 13.8 | 1 | | | | | |
| | | | | | | | | | Open | 73687 | WDMONT B | 115 | 73746 | WOODMONT | 13.8 | 1 | | | | | |
| 4014.3 | 0.03640 | - | 73247 | FARMNGTN | 115 | 73254 | NEWINGTN | 115 1 | C:SOMEADSTK10T | | | | | | 708 | | 93.0 | 164.0 | 0.02564 | 53.4 | 103.4 |
| | | | | | | | | | Open | 73246 | S.MEADOW | 115 | 73257 | ROCKY HL | 115 | 1 | | | | | |
| | | | | | | | | | Open | 73257 | ROCKY HL | 115 | 73428 | ROCKY HL | 23.0 | 1 | | | | | |
| | | | | | | | | | Open | 73246 | S.MEADOW | 115 | 73549 | SMD1112J | 13.8 | 1 | | | | | |
| | | | | | | | | | Open | 73246 | S.MEADOW | 115 | 73547 | CRRA PF | 11.5 | 1 | | | | | |
| 4014.3 | 0.03640 | 0.27694 | 73247 | FARMNGTN | 115 | 73254 | NEWINGTN | 115 1 | C:1773LINE | | | | | | 137 | | 93.0 | 164.0 | 0.02564 | 53.4 | 103.4 |
| | | | | | | | | | Open | 73246 | S.MEADOW | 115 | 73257 | ROCKY HL | 115 | 1 | | | | | |
| 4037.1* | 0.03642 | - | 73247 | FARMNGTN | 115 | 73254 | NEWINGTN | 115 1 | C:SOMEADSTK8T | | | | | | 707 | | 92.1 | 164.0 | 0.02564 | 53.4 | 104.0 |
| | | | | | | | | | Open | 73246 | S.MEADOW | 115 | 73257 | ROCKY HL | 115 | 1 | | | | | |
| | | | | | | | | | Open | 73257 | ROCKY HL | 115 | 73428 | ROCKY HL | 23.0 | 1 | | | | | |
| | | | | | | | | | Open | 73246 | S.MEADOW | 115 | 73549 | SMD1112J | 13.8 | 1 | | | | | |
| | | | | | | | | | Open | 73246 | S.MEADOW | 115 | 73258 | BLOOMFLD | 115 | 1 | | | | | |
| 4053.0 | 0.10850 | - | 73681 | WEST RIV | 115 | 73682 | ELMWST A | 115 1 | C:GRNDAV5TSTK | | | | | | 608 | | 171.8 | 388.0 | 0.07337 | 81.0 | 227.2 |
| | | | | | | | | | Open | 73669 | GRAND AV | 115 | 73681 | WEST RIV | 115 | 2 | | | | | |
| | | | | | | | | | Open | 73681 | WEST RIV | 115 | 73683 | ELMWST B | 115 | 1 | | | | | |
| | | | | | | | | | Open | 73683 | ELMWST B | 115 | 73685 | ALLINGSB | 115 | 1 | | | | | |
| | | | | | | | | | Open | 73669 | GRAND AV | 115 | 73672 | SACKETT | 115 | 1 | | | | | |
| 4053.1 | 0.10848 | - | 73681 | WEST RIV | 115 | 73683 | ELMWST B | 115 1 | C:GRNDAV6TSTK | | | | | | 609 | | 171.8 | 388.0 | 0.07334 | 81.1 | 227.3 |
| | | | | | | | | | Open | 73669 | GRAND AV | 115 | 73672 | SACKETT | 115 | 1 | | | | | |
| | | | | | | | | | Open | 73669 | GRAND AV | 115 | 73681 | WEST RIV | 115 | 1 | | | | | |
| | | | | | | | | | Open | 73681 | WEST RIV | 115 | 73682 | ELMWST A | 115 | 1 | | | | | |
| | | | | | | | | | Open | 73682 | ELMWST A | 115 | 73684 | ALLINGSA | 115 | 1 | | | | | |



This document may contain Critical Energy Infrastructure Information -Do Not Release

# FCITC Single Study

```
     MUST  8.0.1 -- Managing and Utilizing System Transmission --  MON, JAN 21 2008  14:08
     2005 NPCC LIB - PK CASE W/ PROJECT #191
     POST M-N, HIGHIMPORT(CT, SWCT), NY-NE 1000, TAP #1238
Case.File   F:\ISO-NE\Watertown Biomass scope\Study\Transfer\P#191_PK_1B_NY-NE=0_TAP1238.sav
Subsys.File F:\ISO-NE\Watertown Biomass scope\Study\Transfer\Watertown_TransfAnalysis.SUB
Monit.File  F:\ISO-NE\Watertown Biomass scope\Study\Transfer\Watertown_TransferAnalysis.MON
Contin.File F:\ISO-NE\Watertown Biomass scope\Study\Transfer\Watertown_TransferAnalysis.con
Exclud.File none

Study transfer. From SOURCE_ROW     To SINK_SWCT_NNG . Transfer level -   2000.0 MW


 Violations report ordered by transfer capability. Total    56 violations

 Interface-1  Interface     4 SWCT-W1238      Init.Flow=     2247.49 TDF= 0.9060


 IntFce1       TDF     LODF <---------     Limiting constraint      ---------> <--------     Contingency description      --------> Ncon    PreShift  Rating     PTDF IntBase FnlBase
  2698.3   0.06823     -      73669 GRAND AV     115  73681 WEST RIV     115 1  C:GRNDAV2TSTK                                          606      224.1   258.0  0.05249    71.1    97.2
                                                                                  Open  73669 GRAND AV     115  73680 WATER ST     115 1
                                                                                  Open  73669 GRAND AV     115  73676 MILL RVR     115 1
  2698.3   0.06823     -      73669 GRAND AV     115  73681 WEST RIV     115 2  C:GRNDAV2TSTK                                          606      224.1   258.0  0.05249    71.1    97.2
                                                                                  Open  73669 GRAND AV     115  73680 WATER ST     115 1
                                                                                  Open  73669 GRAND AV     115  73676 MILL RVR     115 1
  2698.3   0.06823     -      73669 GRAND AV     115  73681 WEST RIV     115 1  C:GRNDAV2TSPS                                            5      224.1   258.0  0.05249    71.1    97.2
                                                                                  Open  73669 GRAND AV     115  73680 WATER ST     115 1
                                                                                  Open  73669 GRAND AV     115  73676 MILL RVR     115 1
  2698.3   0.06823     -      73669 GRAND AV     115  73681 WEST RIV     115 2  C:GRNDAV2TSPS                                            5      224.1   258.0  0.05249    71.1    97.2
                                                                                  Open  73669 GRAND AV     115  73680 WATER ST     115 1
                                                                                  Open  73669 GRAND AV     115  73676 MILL RVR     115 1
  2770.8   0.03954     -      73106 SOUTHGTN     345  73154 SGTN B       115 2  C:SGTN5TSTK                                            446      562.2   585.0  0.01477   281.6   290.1
                                                                                  Open  73104 FRSTBDGE     345  73106 SOUTHGTN     345 1
                                                                                  Open  73106 SOUTHGTN     345  73154 SGTN B       115 3
  2770.8   0.03954     -      73106 SOUTHGTN     345  73154 SGTN B       115 2  C:SGTN5TSTK-A                                          448      562.2   585.0  0.01477   281.6   290.1
                                                                                  Open  73104 FRSTBDGE     345  73106 SOUTHGTN     345 1
                                                                                  Open  73106 SOUTHGTN     345  73154 SGTN B       115 3
  3216.2   0.03609     -      73672 SACKETT      115  73673 SACKPHS      115 1  C:8003A-9003B                                          478       99.4   138.0  0.00699    70.4    77.9
                                                                                  Open  73669 GRAND AV     115  73681 WEST RIV     115 1
                                                                                  Open  73681 WEST RIV     115  73682 ELMWST A     115 1
                                                                                  Open  73682 ELMWST A     115  73684 ALLINGSA     115 1
                                                                                  Open  73682 ELMWST A     115  73742 ELMWEST     13.8 1
                                                                                  Open  73669 GRAND AV     115  73681 WEST RIV     115 2
                                                                                  Open  73681 WEST RIV     115  73683 ELMWST B     115 1
                                                                                  Open  73683 ELMWST B     115  73685 ALLINGSB     115 1
                                                                                  Open  73683 ELMWST B     115  73742 ELMWEST     13.8 1
  3219.0   0.03609     -      73673 SACKPHS      115  73675 MIX AVE      115 1  C:8003A-9003B                                          478       99.3   138.0  0.00699    70.3    77.8
                                                                                  Open  73669 GRAND AV     115  73681 WEST RIV     115 1
                                                                                  Open  73681 WEST RIV     115  73682 ELMWST A     115 1
                                                                                  Open  73682 ELMWST A     115  73684 ALLINGSA     115 1
                                                                                  Open  73682 ELMWST A     115  73742 ELMWEST     13.8 1
                                                                                  Open  73669 GRAND AV     115  73681 WEST RIV     115 2
                                                                                  Open  73681 WEST RIV     115  73683 ELMWST B     115 1
                                                                                  Open  73683 ELMWST B     115  73685 ALLINGSB     115 1
                                                                                  Open  73683 ELMWST B     115  73742 ELMWEST     13.8 1
```



This document may contain Critical Energy Infrastructure Information -Do Not Release

| | | | | | | | | | | | | | | | | | | | | | |
|---|---|---|---|---|---|---|---|---|---|---|---|---|---|---|---|---|---|---|---|---|---|
| 3307.5 | -0.46564 | - | 73124 | BHAUTO | 345 | 72925 | LUDLOW | 345 | 1 | C:347LINE | | | | | 213 | -1059.2 | -1604.0 | -0.28711 | -795.8 | -1131.7 |
| | | | | | | | | | | Open | 73118 | CTRI347 | 345 | 71336 | SHERMAN | 345 | 1 | | | |
| | | | | | | | | | | Open | 73118 | CTRI347 | 345 | 73123 | KILLINGL | 345 | 1 | | | |
| 3317.1 | -0.46558 | - | 73124 | BHAUTO | 345 | 72925 | LUDLOW | 345 | 1 | C:LKRD2TSTK | | | | | 413 | -1054.4 | -1604.0 | -0.28711 | -795.8 | -1134.7 |
| | | | | | | | | | | Open | 73119 | LAKEROAD | 345 | 73565 | LAKERD#1 | 21.0 | 1 | | | |
| | | | | | | | | | | Open | 73123 | KILLINGL | 345 | 73304 | KILLINGL | 115 | 1 | | | |
| | | | | | | | | | | Open | 73119 | LAKEROAD | 345 | 73123 | KILLINGL | 345 | 1 | | | |
| 3317.1* | -0.46558 | - | 73124 | BHAUTO | 345 | 72925 | LUDLOW | 345 | 1 | C:3348LINE | | | | | 411 | -1054.4 | -1604.0 | -0.28711 | -795.8 | -1134.7 |
| | | | | | | | | | | Open | 73123 | KILLINGL | 345 | 73304 | KILLINGL | 115 | 1 | | | |
| | | | | | | | | | | Open | 73119 | LAKEROAD | 345 | 73123 | KILLINGL | 345 | 1 | | | |
| 3404.6* | 0.10108 | - | 73669 | GRAND AV | 115 | 73681 | WEST RIV | 115 | 2 | C:WRIVER1TSPS | | | | | 11 | 128.9 | 258.0 | 0.05249 | 71.1 | 138.1 |
| | | | | | | | | | | Open | 73677 | UNION AV | 115 | 73680 | WATER ST | 115 | 1 | | | |
| | | | | | | | | | | Open | 73669 | GRAND AV | 115 | 73681 | WEST RIV | 115 | 1 | | | |
| | | | | | | | | | | Open | 73681 | WEST RIV | 115 | 73682 | ELMWST A | 115 | 1 | | | |
| | | | | | | | | | | Open | 73682 | ELMWST A | 115 | 73684 | ALLINGSA | 115 | 1 | | | |
| 3404.7* | 0.10110 | - | 73669 | GRAND AV | 115 | 73681 | WEST RIV | 115 | 1 | C:WRIVER2TSPS | | | | | 14 | 128.9 | 258.0 | 0.05249 | 71.1 | 138.2 |
| | | | | | | | | | | Open | 73677 | UNION AV | 115 | 73680 | WATER ST | 115 | 1 | | | |
| | | | | | | | | | | Open | 73669 | GRAND AV | 115 | 73681 | WEST RIV | 115 | 2 | | | |
| | | | | | | | | | | Open | 73681 | WEST RIV | 115 | 73683 | ELMWST B | 115 | 1 | | | |
| | | | | | | | | | | Open | 73683 | ELMWST B | 115 | 73685 | ALLINGSB | 115 | 1 | | | |
| 3537.5 | 0.03609 | - | 73672 | SACKETT | 115 | 73673 | SACKPHS | 115 | 1 | C:8804A-8904BD | | | | | 481 | 86.6 | 138.0 | 0.00699 | 70.4 | 80.4 |
| | | | | | | | | | | Open | 73684 | ALLINGSA | 115 | 73686 | WDMONT A | 115 | 1 | | | |
| | | | | | | | | | | Open | 73684 | ALLINGSA | 115 | 73744 | ALLINGS | 13.8 | 1 | | | |
| | | | | | | | | | | Open | 73685 | ALLINGSB | 115 | 73687 | WDMONT B | 115 | 1 | | | |
| | | | | | | | | | | Open | 73685 | ALLINGSB | 115 | 73744 | ALLINGS | 13.8 | 1 | | | |
| 3540.4 | 0.03609 | - | 73673 | SACKPHS | 115 | 73675 | MIX AVE | 115 | 1 | C:8804A-8904BD | | | | | 481 | 86.5 | 138.0 | 0.00699 | 70.3 | 80.3 |
| | | | | | | | | | | Open | 73684 | ALLINGSA | 115 | 73686 | WDMONT A | 115 | 1 | | | |
| | | | | | | | | | | Open | 73684 | ALLINGSA | 115 | 73744 | ALLINGS | 13.8 | 1 | | | |
| | | | | | | | | | | Open | 73685 | ALLINGSB | 115 | 73687 | WDMONT B | 115 | 1 | | | |
| | | | | | | | | | | Open | 73685 | ALLINGSB | 115 | 73744 | ALLINGS | 13.8 | 1 | | | |
| 3649.3 | -0.28711 | - | 73124 | BHAUTO | 345 | 72925 | LUDLOW | 345 | 1 | Base Case | | | | | | -795.8 | -1240.0 | | | |
| 3685.4 | 0.05547 | - | 73183 | SHAWSHIL | 115 | 73185 | BUNKER H | 115 | 1 | C:FROSTBR27T | | | | | 588 | 165.0 | 253.0 | 0.03238 | 100.6 | 152.0 |
| | | | | | | | | | | Open | 73189 | FREIGHT | 115 | 73202 | FROST BR | 115 | 1 | | | |
| | | | | | | | | | | Open | 73164 | BALDWNJA | 115 | 73186 | BALDWINA | 115 | 1 | | | |
| | | | | | | | | | | Open | 73164 | BALDWNJA | 115 | 73202 | FROST BR | 115 | 1 | | | |
| | | | | | | | | | | Open | 73164 | BALDWNJA | 115 | 73333 | JACKSHL | 115 | 1 | | | |
| | | | | | | | | | | Open | 73186 | BALDWINA | 115 | 73386 | BALDWINA | 13.8 | 1 | | | |
| 3781.2 | 0.03129 | - | 73168 | GLNBROOK | 115 | 73294 | GLNBRK J | 115 | 1 | C:1440-1450DCT | | | | | 261 | 386.0 | 439.0 | 0.02996 | 85.2 | 136.0 |
| | | | | | | | | | | Open | 73162 | WATERSDE | 115 | 73168 | GLNBROOK | 115 | 1 | | | |
| | | | | | | | | | | Open | 73167 | SO.END | 115 | 73168 | GLNBROOK | 115 | 1 | | | |
| 3815.5 | -0.48388 | - | 73118 | CTRI347 | 345 | 71336 | SHERMAN | 345 | 1 | C:LUDLW3TSTBKR | | | | | 334 | -780.6 | -1618.0 | -0.32201 | -475.5 | -1032.8 |
| | | | | | | | | | | Open | 72925 | LUDLOW | 345 | 73124 | BHAUTO | 345 | 1 | | | |
| | | | | | | | | | | Open | 72925 | LUDLOW | 345 | 72929 | BELCH301 | 345 | 1 | | | |
| | | | | | | | | | | Open | 72925 | LUDLOW | 345 | 72972 | LUDLOW | 115 | 1 | | | |
| | | | | | | | | | | Open | 72929 | BELCH301 | 345 | 71796 | CARP HL | 345 | 1 | | | |
| | | | | | | | | | | Open | 71796 | CARP HL | 345 | 71797 | MILLBURY | 345 | 1 | | | |
| 3826.4 | -0.45079 | -0.44854 | 73118 | CTRI347 | 345 | 71336 | SHERMAN | 345 | 1 | C:395NLINE | | | | | 231 | -832.4 | -1618.0 | -0.32201 | -475.5 | -1036.6 |
| | | | | | | | | | | Open | 72925 | LUDLOW | 345 | 73124 | BHAUTO | 345 | 1 | | | |
| 3834.6* | -0.48063 | - | 73118 | CTRI347 | 345 | 71336 | SHERMAN | 345 | 1 | C:LUDLW5TBF | | | | | 335 | -776.1 | -1618.0 | -0.32201 | -475.5 | -1039.5 |
| | | | | | | | | | | Open | 72925 | LUDLOW | 345 | 72929 | BELCH301 | 345 | 1 | | | |
| | | | | | | | | | | Open | 72925 | LUDLOW | 345 | 72972 | LUDLOW | 115 | 1 | | | |
| | | | | | | | | | | Open | 72929 | BELCH301 | 345 | 71796 | CARP HL | 345 | 1 | | | |
| | | | | | | | | | | Open | 71796 | CARP HL | 345 | 71797 | MILLBURY | 345 | 1 | | | |
| | | | | | | | | | | Open | 72925 | LUDLOW | 345 | 72926 | NRTHFLD | 345 | 1 | | | |
| 3853.5 | 0.03134 | - | 73244 | N.BLMFLD | 115 | 73288 | NESMBY | 115 | 1 | Base Case | | | | | | 165.5 | 221.0 | | | |
| 3937.7 | 0.22810 | - | 73109 | MONTVILE | 345 | 73113 | HADDM NK | 345 | 1 | C:310-348DCT | | | | | 311 | 1486.5 | 1912.0 | 0.15067 | 778.8 | 1059.8 |
| | | | | | | | | | | Open | 73110 | MILLSTNE | 345 | 73112 | MANCHSTR | 345 | 1 | | | |



This document may contain Critical Energy Infrastructure Information -Do Not Release

| | | | | | | | | | | | | | | | | | | | | | | | |
|---|---|---|---|---|---|---|---|---|---|---|---|---|---|---|---|---|---|---|---|---|---|---|---|
| | | | | | | | | | | Open | 73121 | HADAUTO | 345 | 73230 | HADDAM | 115 | 1 | | | | | | |
| | | | | | | | | | | Open | 73121 | HADAUTO | 345 | 73295 | BESECK | 345 | 1 | | | | | | |
| | | | | | | | | | | Open | 73110 | MILLSTNE | 345 | 73121 | HADAUTO | 345 | 1 | | | | | | |
| 3946.6 | 0.04336 | -0.04434 | 73244 | N.BLMFLD | 115 | 73288 | NESMBY | 115 | 1 | C:353LINE | | | | | | | | 218 | 202.7 | 284.0 | 0.03134 | 165.5 | 224.2 |
| | | | | | | | | | | Open | 73107 | SCOVL RK | 345 | 73500 | KLEENTAP | 345 | 1 | | | | | | |
| 3974.7* | 0.03617 | - | 73672 | SACKETT | 115 | 73673 | SACKPHS | 115 | 1 | C:8005A-9005B | | | | | | | | 479 | 69.1 | 138.0 | 0.00699 | 70.4 | 83.7 |
| | | | | | | | | | | Open | 73690 | DEVON178 | 115 | 73195 | DEVON | 115 | 1 | | | | | | |
| | | | | | | | | | | Open | 73688 | MILVON A | 115 | 73690 | DEVON178 | 115 | 1 | | | | | | |
| | | | | | | | | | | Open | 73686 | WDMONT A | 115 | 73688 | MILVON A | 115 | 1 | | | | | | |
| | | | | | | | | | | Open | 73688 | MILVON A | 115 | 73748 | MILVON | 13.8 | 1 | | | | | | |
| | | | | | | | | | | Open | 73686 | WDMONT A | 115 | 73746 | WOODMONT | 13.8 | 1 | | | | | | |
| | | | | | | | | | | Open | 73689 | MILVON B | 115 | 73691 | DEVON179 | 115 | 1 | | | | | | |
| | | | | | | | | | | Open | 73687 | WDMONT B | 115 | 73689 | MILVON B | 115 | 1 | | | | | | |
| | | | | | | | | | | Open | 73689 | MILVON B | 115 | 73748 | MILVON | 13.8 | 1 | | | | | | |
| | | | | | | | | | | Open | 73687 | WDMONT B | 115 | 73746 | WOODMONT | 13.8 | 1 | | | | | | |
| 3977.6* | 0.03617 | - | 73673 | SACKPHS | 115 | 73675 | MIX AVE | 115 | 1 | C:8005A-9005B | | | | | | | | 479 | 68.9 | 138.0 | 0.00699 | 70.3 | 83.7 |
| | | | | | | | | | | Open | 73690 | DEVON178 | 115 | 73195 | DEVON | 115 | 1 | | | | | | |
| | | | | | | | | | | Open | 73688 | MILVON A | 115 | 73690 | DEVON178 | 115 | 1 | | | | | | |
| | | | | | | | | | | Open | 73686 | WDMONT A | 115 | 73688 | MILVON A | 115 | 1 | | | | | | |
| | | | | | | | | | | Open | 73688 | MILVON A | 115 | 73748 | MILVON | 13.8 | 1 | | | | | | |
| | | | | | | | | | | Open | 73686 | WDMONT A | 115 | 73746 | WOODMONT | 13.8 | 1 | | | | | | |
| | | | | | | | | | | Open | 73689 | MILVON B | 115 | 73691 | DEVON179 | 115 | 1 | | | | | | |
| | | | | | | | | | | Open | 73687 | WDMONT B | 115 | 73689 | MILVON B | 115 | 1 | | | | | | |
| | | | | | | | | | | Open | 73689 | MILVON B | 115 | 73748 | MILVON | 13.8 | 1 | | | | | | |
| | | | | | | | | | | Open | 73687 | WDMONT B | 115 | 73746 | WOODMONT | 13.8 | 1 | | | | | | |
| 4016.0 | 0.03640 | - | 73247 | FARMNGTN | 115 | 73254 | NEWINGTN | 115 | 1 | C:SOMEADSTK10T | | | | | | | | 709 | 92.9 | 164.0 | 0.02564 | 53.3 | 103.4 |
| | | | | | | | | | | Open | 73246 | S.MEADOW | 115 | 73257 | ROCKY HL | 115 | 1 | | | | | | |
| | | | | | | | | | | Open | 73257 | ROCKY HL | 115 | 73428 | ROCKY HL | 23.0 | 1 | | | | | | |
| | | | | | | | | | | Open | 73246 | S.MEADOW | 115 | 73549 | SMD1112J | 13.8 | 1 | | | | | | |
| | | | | | | | | | | Open | 73246 | S.MEADOW | 115 | 73547 | CRRA PF | 11.5 | 1 | | | | | | |
| 4016.0 | 0.03640 | 0.27694 | 73247 | FARMNGTN | 115 | 73254 | NEWINGTN | 115 | 1 | C:1773LINE | | | | | | | | 137 | 92.9 | 164.0 | 0.02564 | 53.3 | 103.4 |
| | | | | | | | | | | Open | 73246 | S.MEADOW | 115 | 73257 | ROCKY HL | 115 | 1 | | | | | | |
| 4038.8* | 0.03642 | - | 73247 | FARMNGTN | 115 | 73254 | NEWINGTN | 115 | 1 | C:SOMEADSTK8T | | | | | | | | 708 | 92.0 | 164.0 | 0.02564 | 53.3 | 104.0 |
| | | | | | | | | | | Open | 73246 | S.MEADOW | 115 | 73257 | ROCKY HL | 115 | 1 | | | | | | |
| | | | | | | | | | | Open | 73257 | ROCKY HL | 115 | 73428 | ROCKY HL | 23.0 | 1 | | | | | | |
| | | | | | | | | | | Open | 73246 | S.MEADOW | 115 | 73549 | SMD1112J | 13.8 | 1 | | | | | | |
| | | | | | | | | | | Open | 73246 | S.MEADOW | 115 | 73258 | BLOOMFLD | 115 | 1 | | | | | | |
| 4053.4 | 0.10850 | - | 73681 | WEST RIV | 115 | 73682 | ELMWST A | 115 | 1 | C:GRNDAV5TSTK | | | | | | | | 609 | 171.7 | 388.0 | 0.07337 | 80.9 | 227.2 |
| | | | | | | | | | | Open | 73669 | GRAND AV | 115 | 73681 | WEST RIV | 115 | 2 | | | | | | |
| | | | | | | | | | | Open | 73681 | WEST RIV | 115 | 73683 | ELMWST B | 115 | 1 | | | | | | |
| | | | | | | | | | | Open | 73683 | ELMWST B | 115 | 73685 | ALLINGSB | 115 | 1 | | | | | | |
| | | | | | | | | | | Open | 73669 | GRAND AV | 115 | 73672 | SACKETT | 115 | 1 | | | | | | |
| 4053.5 | 0.10848 | - | 73681 | WEST RIV | 115 | 73683 | ELMWST B | 115 | 1 | C:GRNDAV6TSTK | | | | | | | | 610 | 171.8 | 388.0 | 0.07334 | 81.1 | 227.3 |
| | | | | | | | | | | Open | 73669 | GRAND AV | 115 | 73672 | SACKETT | 115 | 1 | | | | | | |
| | | | | | | | | | | Open | 73669 | GRAND AV | 115 | 73681 | WEST RIV | 115 | 1 | | | | | | |
| | | | | | | | | | | Open | 73681 | WEST RIV | 115 | 73682 | ELMWST A | 115 | 1 | | | | | | |
| | | | | | | | | | | Open | 73682 | ELMWST A | 115 | 73684 | ALLINGSA | 115 | 1 | | | | | | |



This document may contain Critical Energy Infrastructure Information -Do Not Release

# FCITC Single Study

```
     MUST  8.0.1 -- Managing and Utilizing System Transmission --  MON, JAN 21 2008  14:09
     2005 NPCC LIB - PK CASE W/O PROJECT #191
     POST M-N, HIGHIMPORT(CT, SWCT), NY-NE 1000, SINK OFF
Case.File   F:\ISO-NE\Watertown Biomass scope\Study\Transfer\P#191_PK_1C_NY-NE=0.sav
Subsys.File F:\ISO-NE\Watertown Biomass scope\Study\Transfer\Watertown_TransfAnalysis.SUB
Monit.File  F:\ISO-NE\Watertown Biomass scope\Study\Transfer\Watertown_TransferAnalysis.MON
Contin.File F:\ISO-NE\Watertown Biomass scope\Study\Transfer\Watertown_TransferAnalysis.con
Exclud.File none

Study transfer. From SOURCE_ROW     To SINK_SWCT_NNG . Transfer level -   2000.0 MW


 Violations report ordered by transfer capability. Total    60 violations

 Interface-1  Interface     3 SWCT-S          Init.Flow=     2250.86 TDF= 0.9060


 IntFce1       TDF     LODF <---------     Limiting constraint      ---------> <--------     Contingency description      --------> Ncon    PreShift  Rating     PTDF IntBase FnlBase
  2564.7   0.03954     -      73106 SOUTHGTN     345  73154 SGTN B       115 2  C:SGTN5TSTK-A                                          449      571.3   585.0  0.01477   286.1   291.2
                                                                                   Open  73104 FRSTBDGE     345  73106 SOUTHGTN     345 1
                                                                                   Open  73106 SOUTHGTN     345  73154 SGTN B       115 3
  2564.7   0.03954     -      73106 SOUTHGTN     345  73154 SGTN B       115 2  C:SGTN5TSTK                                           447      571.3   585.0  0.01477   286.1   291.2
                                                                                   Open  73104 FRSTBDGE     345  73106 SOUTHGTN     345 1
                                                                                   Open  73106 SOUTHGTN     345  73154 SGTN B       115 3
  2687.3   0.06823     -      73669 GRAND AV     115  73681 WEST RIV     115 2  C:GRNDAV2TSTK                                          604      225.1   258.0  0.05249    71.9    97.2
                                                                                   Open  73669 GRAND AV     115  73680 WATER ST     115 1
                                                                                   Open  73669 GRAND AV     115  73676 MILL RVR     115 1
  2687.3   0.06823     -      73669 GRAND AV     115  73681 WEST RIV     115 1  C:GRNDAV2TSPS                                            5      225.1   258.0  0.05249    71.9    97.2
                                                                                   Open  73669 GRAND AV     115  73680 WATER ST     115 1
                                                                                   Open  73669 GRAND AV     115  73676 MILL RVR     115 1
  2687.3   0.06823     -      73669 GRAND AV     115  73681 WEST RIV     115 2  C:GRNDAV2TSPS                                            5      225.1   258.0  0.05249    71.9    97.2
                                                                                   Open  73669 GRAND AV     115  73680 WATER ST     115 1
                                                                                   Open  73669 GRAND AV     115  73676 MILL RVR     115 1
  2687.3   0.06823     -      73669 GRAND AV     115  73681 WEST RIV     115 1  C:GRNDAV2TSTK                                          604      225.1   258.0  0.05249    71.9    97.2
                                                                                   Open  73669 GRAND AV     115  73680 WATER ST     115 1
                                                                                   Open  73669 GRAND AV     115  73676 MILL RVR     115 1
  3203.2   0.03608     -      73672 SACKETT      115  73673 SACKPHS      115 1  C:8003A-9003B                                          476      100.1   138.0  0.00699    70.6    78.0
                                                                                   Open  73669 GRAND AV     115  73681 WEST RIV     115 1
                                                                                   Open  73681 WEST RIV     115  73682 ELMWST A     115 1
                                                                                   Open  73682 ELMWST A     115  73684 ALLINGSA     115 1
                                                                                   Open  73682 ELMWST A     115  73742 ELMWEST     13.8 1
                                                                                   Open  73669 GRAND AV     115  73681 WEST RIV     115 2
                                                                                   Open  73681 WEST RIV     115  73683 ELMWST B     115 1
                                                                                   Open  73683 ELMWST B     115  73685 ALLINGSB     115 1
                                                                                   Open  73683 ELMWST B     115  73742 ELMWEST     13.8 1
  3206.1   0.03608     -      73673 SACKPHS      115  73675 MIX AVE      115 1  C:8003A-9003B                                          476      100.0   138.0  0.00699    70.5    77.9
                                                                                   Open  73669 GRAND AV     115  73681 WEST RIV     115 1
                                                                                   Open  73681 WEST RIV     115  73682 ELMWST A     115 1
                                                                                   Open  73682 ELMWST A     115  73684 ALLINGSA     115 1
                                                                                   Open  73682 ELMWST A     115  73742 ELMWEST     13.8 1
                                                                                   Open  73669 GRAND AV     115  73681 WEST RIV     115 2
                                                                                   Open  73681 WEST RIV     115  73683 ELMWST B     115 1
                                                                                   Open  73683 ELMWST B     115  73685 ALLINGSB     115 1
                                                                                   Open  73683 ELMWST B     115  73742 ELMWEST     13.8 1
```



This document may contain Critical Energy Infrastructure Information -Do Not Release

| | | | | | | | | | | | | | | | | | | | | | |
|---|---|---|---|---|---|---|---|---|---|---|---|---|---|---|---|---|---|---|---|---|---|
| 3277.3 | -0.46562 | - | 73124 | BHAUTO | 345 | 72925 | LUDLOW | 345 | 1 | C:347LINE | | | | | 214 | -1076.4 | -1604.0 | -0.28710 | -804.2 | -1129.5 |
| | | | | | | | | | | Open | 73118 | CTRI347 | 345 | 71336 | SHERMAN | 345 | 1 | | | |
| | | | | | | | | | | Open | 73118 | CTRI347 | 345 | 73123 | KILLINGL | 345 | 1 | | | |
| 3286.9 | -0.46557 | - | 73124 | BHAUTO | 345 | 72925 | LUDLOW | 345 | 1 | C:3348LINE | | | | | 412 | -1071.6 | -1604.0 | -0.28710 | -804.2 | -1132.6 |
| | | | | | | | | | | Open | 73123 | KILLINGL | 345 | 73304 | KILLINGL | 115 | 1 | | | |
| | | | | | | | | | | Open | 73119 | LAKEROAD | 345 | 73123 | KILLINGL | 345 | 1 | | | |
| 3286.9* | -0.46557 | - | 73124 | BHAUTO | 345 | 72925 | LUDLOW | 345 | 1 | C:LKRD2TSTK | | | | | 414 | -1071.6 | -1604.0 | -0.28710 | -804.2 | -1132.6 |
| | | | | | | | | | | Open | 73119 | LAKEROAD | 345 | 73565 | LAKERD#1 | 21.0 | 1 | | | |
| | | | | | | | | | | Open | 73123 | KILLINGL | 345 | 73304 | KILLINGL | 115 | 1 | | | |
| | | | | | | | | | | Open | 73119 | LAKEROAD | 345 | 73123 | KILLINGL | 345 | 1 | | | |
| 3394.3* | 0.10108 | - | 73669 | GRAND AV | 115 | 73681 | WEST RIV | 115 | 2 | C:WRIVER1TSPS | | | | | 11 | 130.4 | 258.0 | 0.05249 | 71.9 | 138.1 |
| | | | | | | | | | | Open | 73677 | UNION AV | 115 | 73680 | WATER ST | 115 | 1 | | | |
| | | | | | | | | | | Open | 73669 | GRAND AV | 115 | 73681 | WEST RIV | 115 | 1 | | | |
| | | | | | | | | | | Open | 73681 | WEST RIV | 115 | 73682 | ELMWST A | 115 | 1 | | | |
| | | | | | | | | | | Open | 73682 | ELMWST A | 115 | 73684 | ALLINGSA | 115 | 1 | | | |
| 3394.4* | 0.10110 | - | 73669 | GRAND AV | 115 | 73681 | WEST RIV | 115 | 1 | C:WRIVER2TSPS | | | | | 14 | 130.4 | 258.0 | 0.05249 | 71.9 | 138.1 |
| | | | | | | | | | | Open | 73677 | UNION AV | 115 | 73680 | WATER ST | 115 | 1 | | | |
| | | | | | | | | | | Open | 73669 | GRAND AV | 115 | 73681 | WEST RIV | 115 | 2 | | | |
| | | | | | | | | | | Open | 73681 | WEST RIV | 115 | 73683 | ELMWST B | 115 | 1 | | | |
| | | | | | | | | | | Open | 73683 | ELMWST B | 115 | 73685 | ALLINGSB | 115 | 1 | | | |
| 3524.6 | 0.03608 | - | 73672 | SACKETT | 115 | 73673 | SACKPHS | 115 | 1 | C:8804A-8904BD | | | | | 479 | 87.3 | 138.0 | 0.00699 | 70.6 | 80.5 |
| | | | | | | | | | | Open | 73684 | ALLINGSA | 115 | 73686 | WDMONT A | 115 | 1 | | | |
| | | | | | | | | | | Open | 73684 | ALLINGSA | 115 | 73744 | ALLINGS | 13.8 | 1 | | | |
| | | | | | | | | | | Open | 73685 | ALLINGSB | 115 | 73687 | WDMONT B | 115 | 1 | | | |
| | | | | | | | | | | Open | 73685 | ALLINGSB | 115 | 73744 | ALLINGS | 13.8 | 1 | | | |
| 3527.5 | 0.03608 | - | 73673 | SACKPHS | 115 | 73675 | MIX AVE | 115 | 1 | C:8804A-8904BD | | | | | 479 | 87.2 | 138.0 | 0.00699 | 70.5 | 80.4 |
| | | | | | | | | | | Open | 73684 | ALLINGSA | 115 | 73686 | WDMONT A | 115 | 1 | | | |
| | | | | | | | | | | Open | 73684 | ALLINGSA | 115 | 73744 | ALLINGS | 13.8 | 1 | | | |
| | | | | | | | | | | Open | 73685 | ALLINGSB | 115 | 73687 | WDMONT B | 115 | 1 | | | |
| | | | | | | | | | | Open | 73685 | ALLINGSB | 115 | 73744 | ALLINGS | 13.8 | 1 | | | |
| 3626.0 | -0.28710 | - | 73124 | BHAUTO | 345 | 72925 | LUDLOW | 345 | 1 | Base Case | | | | | | -804.2 | -1240.0 | | | |
| 3749.2 | 0.05546 | - | 73183 | SHAWSHIL | 115 | 73185 | BUNKER H | 115 | 1 | C:FROSTBR27T | | | | | 586 | 161.3 | 253.0 | 0.03238 | 98.6 | 152.2 |
| | | | | | | | | | | Open | 73189 | FREIGHT | 115 | 73202 | FROST BR | 115 | 1 | | | |
| | | | | | | | | | | Open | 73164 | BALDWNJA | 115 | 73186 | BALDWINA | 115 | 1 | | | |
| | | | | | | | | | | Open | 73164 | BALDWNJA | 115 | 73202 | FROST BR | 115 | 1 | | | |
| | | | | | | | | | | Open | 73164 | BALDWNJA | 115 | 73333 | JACKSHL | 115 | 1 | | | |
| | | | | | | | | | | Open | 73186 | BALDWINA | 115 | 73386 | BALDWINA | 13.8 | 1 | | | |
| 3778.9 | -0.48387 | - | 73118 | CTRI347 | 345 | 71336 | SHERMAN | 345 | 1 | C:LUDLW3TSTBKR | | | | | 335 | -801.9 | -1618.0 | -0.32201 | -491.3 | -1034.4 |
| | | | | | | | | | | Open | 72925 | LUDLOW | 345 | 73124 | BHAUTO | 345 | 1 | | | |
| | | | | | | | | | | Open | 72925 | LUDLOW | 345 | 72929 | BELCH301 | 345 | 1 | | | |
| | | | | | | | | | | Open | 72925 | LUDLOW | 345 | 72972 | LUDLOW | 115 | 1 | | | |
| | | | | | | | | | | Open | 72929 | BELCH301 | 345 | 71796 | CARP HL | 345 | 1 | | | |
| | | | | | | | | | | Open | 71796 | CARP HL | 345 | 71797 | MILLBURY | 345 | 1 | | | |
| 3780.6 | 0.03134 | - | 73244 | N.BLMFLD | 115 | 73288 | NESMBY | 115 | 1 | Base Case | | | | | | 168.1 | 221.0 | | | |
| 3790.3 | -0.45078 | -0.44854 | 73118 | CTRI347 | 345 | 71336 | SHERMAN | 345 | 1 | C:395NLINE | | | | | 232 | -852.0 | -1618.0 | -0.32201 | -491.3 | -1038.5 |
| | | | | | | | | | | Open | 72925 | LUDLOW | 345 | 73124 | BHAUTO | 345 | 1 | | | |
| 3791.8 | 0.03130 | - | 73168 | GLNBROOK | 115 | 73294 | GLNBRK J | 115 | 1 | C:1440-1450DCT | | | | | 262 | 385.8 | 439.0 | 0.02997 | 85.0 | 136.0 |
| | | | | | | | | | | Open | 73162 | WATERSDE | 115 | 73168 | GLNBROOK | 115 | 1 | | | |
| | | | | | | | | | | Open | 73167 | SO.END | 115 | 73168 | GLNBROOK | 115 | 1 | | | |
| 3798.1* | -0.48062 | - | 73118 | CTRI347 | 345 | 71336 | SHERMAN | 345 | 1 | C:LUDLW5TBF | | | | | 336 | -797.2 | -1618.0 | -0.32201 | -491.3 | -1041.2 |
| | | | | | | | | | | Open | 72925 | LUDLOW | 345 | 72929 | BELCH301 | 345 | 1 | | | |
| | | | | | | | | | | Open | 72925 | LUDLOW | 345 | 72972 | LUDLOW | 115 | 1 | | | |
| | | | | | | | | | | Open | 72929 | BELCH301 | 345 | 71796 | CARP HL | 345 | 1 | | | |
| | | | | | | | | | | Open | 71796 | CARP HL | 345 | 71797 | MILLBURY | 345 | 1 | | | |
| | | | | | | | | | | Open | 72925 | LUDLOW | 345 | 72926 | NRTHFLD | 345 | 1 | | | |
| 3886.0 | 0.04336 | -0.04434 | 73244 | N.BLMFLD | 115 | 73288 | NESMBY | 115 | 1 | C:353LINE | | | | | 219 | 205.8 | 284.0 | 0.03134 | 168.1 | 224.6 |
| | | | | | | | | | | Open | 73107 | SCOVL RK | 345 | 73500 | KLEENTAP | 345 | 1 | | | |



This document may contain Critical Energy Infrastructure Information -Do Not Release

| | | | | | | | | | | | | | | | | | | | | | |
|---|---|---|---|---|---|---|---|---|---|---|---|---|---|---|---|---|---|---|---|---|---|
| 3902.3 | 0.22810 | - | 73109 | MONTVILE | 345 | 73113 | HADDM NK | 345 | 1 | C:310-348DCT | | | | | | | 312 | 1496.2 | 1912.0 | 0.15067 | 785.1 | 1059.8 |
| | | | | | | | | | | Open | 73110 | MILLSTNE | 345 | 73112 | MANCHSTR | 345 | 1 | | | | | |
| | | | | | | | | | | Open | 73121 | HADAUTO | 345 | 73230 | HADDAM | 115 | 1 | | | | | |
| | | | | | | | | | | Open | 73121 | HADAUTO | 345 | 73295 | BESECK | 345 | 1 | | | | | |
| | | | | | | | | | | Open | 73110 | MILLSTNE | 345 | 73121 | HADAUTO | 345 | 1 | | | | | |
| 3962.0* | 0.03616 | - | 73672 | SACKETT | 115 | 73673 | SACKPHS | 115 | 1 | C:8005A-9005B | | | | | | | 477 | 69.7 | 138.0 | 0.00699 | 70.6 | 83.8 |
| | | | | | | | | | | Open | 73690 | DEVON178 | 115 | 73195 | DEVON | 115 | 1 | | | | | |
| | | | | | | | | | | Open | 73688 | MILVON A | 115 | 73690 | DEVON178 | 115 | 1 | | | | | |
| | | | | | | | | | | Open | 73686 | WDMONT A | 115 | 73688 | MILVON A | 115 | 1 | | | | | |
| | | | | | | | | | | Open | 73688 | MILVON A | 115 | 73748 | MILVON | 13.8 | 1 | | | | | |
| | | | | | | | | | | Open | 73686 | WDMONT A | 115 | 73746 | WOODMONT | 13.8 | 1 | | | | | |
| | | | | | | | | | | Open | 73689 | MILVON B | 115 | 73691 | DEVON179 | 115 | 1 | | | | | |
| | | | | | | | | | | Open | 73687 | WDMONT B | 115 | 73689 | MILVON B | 115 | 1 | | | | | |
| | | | | | | | | | | Open | 73689 | MILVON B | 115 | 73748 | MILVON | 13.8 | 1 | | | | | |
| | | | | | | | | | | Open | 73687 | WDMONT B | 115 | 73746 | WOODMONT | 13.8 | 1 | | | | | |
| 3964.9* | 0.03616 | - | 73673 | SACKPHS | 115 | 73675 | MIX AVE | 115 | 1 | C:8005A-9005B | | | | | | | 477 | 69.6 | 138.0 | 0.00699 | 70.5 | 83.7 |
| | | | | | | | | | | Open | 73690 | DEVON178 | 115 | 73195 | DEVON | 115 | 1 | | | | | |
| | | | | | | | | | | Open | 73688 | MILVON A | 115 | 73690 | DEVON178 | 115 | 1 | | | | | |
| | | | | | | | | | | Open | 73686 | WDMONT A | 115 | 73688 | MILVON A | 115 | 1 | | | | | |
| | | | | | | | | | | Open | 73688 | MILVON A | 115 | 73748 | MILVON | 13.8 | 1 | | | | | |
| | | | | | | | | | | Open | 73686 | WDMONT A | 115 | 73746 | WOODMONT | 13.8 | 1 | | | | | |
| | | | | | | | | | | Open | 73689 | MILVON B | 115 | 73691 | DEVON179 | 115 | 1 | | | | | |
| | | | | | | | | | | Open | 73687 | WDMONT B | 115 | 73689 | MILVON B | 115 | 1 | | | | | |
| | | | | | | | | | | Open | 73689 | MILVON B | 115 | 73748 | MILVON | 13.8 | 1 | | | | | |
| | | | | | | | | | | Open | 73687 | WDMONT B | 115 | 73746 | WOODMONT | 13.8 | 1 | | | | | |
| 3995.3 | 0.03640 | 0.27694 | 73247 | FARMNGTN | 115 | 73254 | NEWINGTN | 115 | 1 | C:1773LINE | | | | | | | 138 | 93.9 | 164.0 | 0.02564 | 54.0 | 103.3 |
| | | | | | | | | | | Open | 73246 | S.MEADOW | 115 | 73257 | ROCKY HL | 115 | 1 | | | | | |
| 3995.3 | 0.03640 | - | 73247 | FARMNGTN | 115 | 73254 | NEWINGTN | 115 | 1 | C:SOMEADSTK10T | | | | | | | 707 | 93.9 | 164.0 | 0.02564 | 54.0 | 103.3 |
| | | | | | | | | | | Open | 73246 | S.MEADOW | 115 | 73257 | ROCKY HL | 115 | 1 | | | | | |
| | | | | | | | | | | Open | 73257 | ROCKY HL | 115 | 73428 | ROCKY HL | 23.0 | 1 | | | | | |
| | | | | | | | | | | Open | 73246 | S.MEADOW | 115 | 73549 | SMD1112J | 13.8 | 1 | | | | | |
| | | | | | | | | | | Open | 73246 | S.MEADOW | 115 | 73547 | CRRA PF | 11.5 | 1 | | | | | |
| 4018.1* | 0.03642 | - | 73247 | FARMNGTN | 115 | 73254 | NEWINGTN | 115 | 1 | C:SOMEADSTK8T | | | | | | | 706 | 93.0 | 164.0 | 0.02564 | 54.0 | 104.0 |
| | | | | | | | | | | Open | 73246 | S.MEADOW | 115 | 73257 | ROCKY HL | 115 | 1 | | | | | |
| | | | | | | | | | | Open | 73257 | ROCKY HL | 115 | 73428 | ROCKY HL | 23.0 | 1 | | | | | |
| | | | | | | | | | | Open | 73246 | S.MEADOW | 115 | 73549 | SMD1112J | 13.8 | 1 | | | | | |
| | | | | | | | | | | Open | 73246 | S.MEADOW | 115 | 73258 | BLOOMFLD | 115 | 1 | | | | | |
| 4033.4 | -0.43114 | - | 73103 | MEEKVL J | 345 | 73124 | BHAUTO | 345 | 1 | C:347LINE | | | | | | | 214 | -755.7 | -1604.0 | -0.26194 | -497.8 | -1013.1 |
| | | | | | | | | | | Open | 73118 | CTRI347 | 345 | 71336 | SHERMAN | 345 | 1 | | | | | |
| | | | | | | | | | | Open | 73118 | CTRI347 | 345 | 73123 | KILLINGL | 345 | 1 | | | | | |
| 4042.8 | 0.10850 | - | 73681 | WEST RIV | 115 | 73682 | ELMWST A | 115 | 1 | C:GRNDAV5TSTK | | | | | | | 607 | 173.4 | 388.0 | 0.07336 | 82.0 | 227.1 |
| | | | | | | | | | | Open | 73669 | GRAND AV | 115 | 73681 | WEST RIV | 115 | 2 | | | | | |
| | | | | | | | | | | Open | 73681 | WEST RIV | 115 | 73683 | ELMWST B | 115 | 1 | | | | | |
| | | | | | | | | | | Open | 73683 | ELMWST B | 115 | 73685 | ALLINGSB | 115 | 1 | | | | | |
| | | | | | | | | | | Open | 73669 | GRAND AV | 115 | 73672 | SACKETT | 115 | 1 | | | | | |
| 4042.9 | 0.10848 | - | 73681 | WEST RIV | 115 | 73683 | ELMWST B | 115 | 1 | C:GRNDAV6TSTK | | | | | | | 608 | 173.4 | 388.0 | 0.07334 | 82.2 | 227.3 |
| | | | | | | | | | | Open | 73669 | GRAND AV | 115 | 73672 | SACKETT | 115 | 1 | | | | | |
| | | | | | | | | | | Open | 73669 | GRAND AV | 115 | 73681 | WEST RIV | 115 | 1 | | | | | |
| | | | | | | | | | | Open | 73681 | WEST RIV | 115 | 73682 | ELMWST A | 115 | 1 | | | | | |
| | | | | | | | | | | Open | 73682 | ELMWST A | 115 | 73684 | ALLINGSA | 115 | 1 | | | | | |
| 4044.1 | -0.43108 | - | 73103 | MEEKVL J | 345 | 73124 | BHAUTO | 345 | 1 | C:LKRD2TSTK | | | | | | | 414 | -750.8 | -1604.0 | -0.26194 | -497.8 | -1016.2 |
| | | | | | | | | | | Open | 73119 | LAKEROAD | 345 | 73565 | LAKERD#1 | 21.0 | 1 | | | | | |
| | | | | | | | | | | Open | 73123 | KILLINGL | 345 | 73304 | KILLINGL | 115 | 1 | | | | | |
| | | | | | | | | | | Open | 73119 | LAKEROAD | 345 | 73123 | KILLINGL | 345 | 1 | | | | | |
| 4044.1* | -0.43108 | - | 73103 | MEEKVL J | 345 | 73124 | BHAUTO | 345 | 1 | C:3348LINE | | | | | | | 412 | -750.8 | -1604.0 | -0.26194 | -497.8 | -1016.2 |
| | | | | | | | | | | Open | 73123 | KILLINGL | 345 | 73304 | KILLINGL | 115 | 1 | | | | | |
| | | | | | | | | | | Open | 73119 | LAKEROAD | 345 | 73123 | KILLINGL | 345 | 1 | | | | | |



This document may contain Critical Energy Infrastructure Information -Do Not Release

# FCITC Single Study

```
     MUST  8.0.1 -- Managing and Utilizing System Transmission --  MON, JAN 21 2008  14:04
     2005 NPCC LIB - SH CASE W/O PROJECT #191
     POST M-N, HIGHIMPORT(CT, SWCT), NY-NE 1000
Case.File   F:\ISO-NE\Watertown Biomass scope\Study\Transfer\P#191_SH_1A_NY-NE=0.sav
Subsys.File F:\ISO-NE\Watertown Biomass scope\Study\Transfer\Watertown_TransfAnalysis.SUB
Monit.File  F:\ISO-NE\Watertown Biomass scope\Study\Transfer\Watertown_TransferAnalysis.MON
Contin.File F:\ISO-NE\Watertown Biomass scope\Study\Transfer\Watertown_TransferAnalysis.con
Exclud.File none

Study transfer. From SOURCE_ROW     To SINK_SWCT_NNG . Transfer level -   1000.0 MW


 Violations report ordered by transfer capability. Total     2 violations

 Interface-1  Interface     3 SWCT-S          Init.Flow=     1066.37 TDF= 0.9071


 IntFce1       TDF     LODF <---------     Limiting constraint      ---------> <--------     Contingency description      --------> Ncon    PreShift  Rating     PTDF IntBase FnlBase
  2555.5  -0.46560     -      73124 BHAUTO       345  72925 LUDLOW       345 1  C:347LINE                                                 214     -839.7 -1604.0 -0.28704  -620.4 -1091.6
                                                                                  Open  73118 CTRI347      345  71336 SHERMAN      345 1
                                                                                  Open  73118 CTRI347      345  73123 KILLINGL     345 1
```



This document may contain Critical Energy Infrastructure Information -Do Not Release

# FCITC Single Study

```
     MUST  8.0.1 -- Managing and Utilizing System Transmission --  MON, JAN 21 2008  14:04
     2005 NPCC LIB - SH CASE W/ PROJECT #191
     POST M-N, HIGHIMPORT(CT, SWCT), NY-NE 1000, TAP #1191
Case.File   F:\ISO-NE\Watertown Biomass scope\Study\Transfer\P#191_SH_1B_NY-NE=0_TAP1191.sav
Subsys.File F:\ISO-NE\Watertown Biomass scope\Study\Transfer\Watertown_TransfAnalysis.SUB
Monit.File  F:\ISO-NE\Watertown Biomass scope\Study\Transfer\Watertown_TransferAnalysis.MON
Contin.File F:\ISO-NE\Watertown Biomass scope\Study\Transfer\Watertown_TransferAnalysis.con
Exclud.File none

Study transfer. From SOURCE_ROW     To SINK_SWCT_NNG . Transfer level -   1000.0 MW


 Violations report ordered by transfer capability. Total     2 violations

 Interface-1  Interface     3 SWCT-S          Init.Flow=     1065.97 TDF= 0.9072


 IntFce1       TDF     LODF <---------     Limiting constraint      ---------> <--------     Contingency description      --------> Ncon    PreShift  Rating     PTDF IntBase FnlBase
  2554.4  -0.46560     -      73124 BHAUTO       345  72925 LUDLOW       345 1  C:347LINE                                                 213     -840.0 -1604.0 -0.28704  -620.5 -1091.4
                                                                                  Open  73118 CTRI347      345  71336 SHERMAN      345 1
                                                                                  Open  73118 CTRI347      345  73123 KILLINGL     345 1
```



This document may contain Critical Energy Infrastructure Information -Do Not Release

# FCITC Single Study

```
     MUST  8.0.1 -- Managing and Utilizing System Transmission --  MON, JAN 21 2008  14:03
     2005 NPCC LIB - SH CASE W/ PROJECT #191
     POST M-N, HIGHIMPORT(CT, SWCT), NY-NE 1000, TAP #1238
Case.File   F:\ISO-NE\Watertown Biomass scope\Study\Transfer\P#191_SH_1B_NY-NE=0_TAP1238.sav
Subsys.File F:\ISO-NE\Watertown Biomass scope\Study\Transfer\Watertown_TransfAnalysis.SUB
Monit.File  F:\ISO-NE\Watertown Biomass scope\Study\Transfer\Watertown_TransferAnalysis.MON
Contin.File F:\ISO-NE\Watertown Biomass scope\Study\Transfer\Watertown_TransferAnalysis.con
Exclud.File none

Study transfer. From SOURCE_ROW     To SINK_SWCT_NNG . Transfer level -   1000.0 MW


 Violations report ordered by transfer capability. Total     2 violations

 Interface-1  Interface     4 SWCT-W1238      Init.Flow=     1065.90 TDF= 0.9072


 IntFce1       TDF     LODF <---------     Limiting constraint      ---------> <--------     Contingency description      --------> Ncon    PreShift  Rating     PTDF IntBase FnlBase
  2554.3  -0.46560     -      73124 BHAUTO       345  72925 LUDLOW       345 1  C:347LINE                                                 213     -840.1 -1604.0 -0.28704  -620.5 -1091.5
                                                                                  Open  73118 CTRI347      345  71336 SHERMAN      345 1
                                                                                  Open  73118 CTRI347      345  73123 KILLINGL     345 1
```



This document may contain Critical Energy Infrastructure Information -Do Not Release

# FCITC Single Study

```
     MUST  8.0.1 -- Managing and Utilizing System Transmission --  MON, JAN 21 2008  14:05
     2005 NPCC LIB - SH CASE W/O PROJECT #191
     POST M-N, HIGHIMPORT(CT, SWCT), NY-NE 1000, SINK OFF
Case.File   F:\ISO-NE\Watertown Biomass scope\Study\Transfer\P#191_SH_1C_NY-NE=0.sav
Subsys.File F:\ISO-NE\Watertown Biomass scope\Study\Transfer\Watertown_TransfAnalysis.SUB
Monit.File  F:\ISO-NE\Watertown Biomass scope\Study\Transfer\Watertown_TransferAnalysis.MON
Contin.File F:\ISO-NE\Watertown Biomass scope\Study\Transfer\Watertown_TransferAnalysis.con
Exclud.File none

Study transfer. From SOURCE_ROW     To SINK_SWCT_NNG . Transfer level -   1000.0 MW


 Violations report ordered by transfer capability. Total     2 violations

 Interface-1  Interface     3 SWCT-S          Init.Flow=     1066.03 TDF= 0.9071


 IntFce1       TDF     LODF <---------     Limiting constraint      ---------> <--------     Contingency description      --------> Ncon    PreShift  Rating     PTDF IntBase FnlBase
  2521.4  -0.46559     -      73124 BHAUTO       345  72925 LUDLOW       345 1  C:347LINE                                                214     -857.0 -1604.0 -0.28704  -628.7 -1089.2
                                                                                  Open  73118 CTRI347      345  71336 SHERMAN      345 1
                                                                                  Open  73118 CTRI347      345  73123 KILLINGL     345 1
```



This document may contain Critical Energy Infrastructure Information -Do Not Release

Appendix

G

# Interface Definitions - Sources & Sinks



This document may contain Critical Energy Infrastructure Information -Do Not Release

# POST M-N
# Interfaces

```
'<CONN-IMPORT'        11
 72925 73124          1   11  F          /*LUDLOW 345 TO BARB HL AUTO 345 - ENTERED BY PTI
 73119 73108          1   11  F          /*LAKE ROAD    345    -    CARD         345
 73123 73304          1   11  F          /*KILLINGLY    345    -    KILLINGLY      115
 74344 73117          1   11  F          /*PLEASANTVALLEY345       -          CTNY          345
 72581 73285          1   11  F          /*WOOD RIVER      115        -          CTRI          115
 72955 73244          1   11  F          /*SOUTHWICK       115        -          NORTH BLOOMFIELD115
 72991 73244          1   11  F          /*SO.AGAWAMJCT.A115       -          NORTH BLOOMFIELD115
 72992 73244          1   11  F          /*SO.AGAWAMJCT.B115       -          NORTH BLOOMFIELD115
```

### Southwest Connecticut Interface without Tapping Line #1238

```
'<SWCT-S'        12
73583 73115          1   12  F          /*NUTMEG          345        -          PLUMTREE          345
 73127 73204          1   12  F          /*SOUTHINGTONBRX115       -          TODD          115
 73128 73211          1   12  F          /*SOUTHINGTONB2R115       -          CANAL         115
 73154 73193          1   12  F          /*SGTN B 115        -        LUCCHINI          115
 73154 73409          1   12  F          /*SGTN B 115        -        SOUTHGTN27.6      27.6
 73154 73409          2   12  F          /*SGTN B 115        -        SOUTHGTN27.6      27.6
 73198 73196          1   12  F          /*SOUTHINGTON     115        -          GLEN LAKE         115
 73198 73631          1   12  F          /*SOUTHINGTON     115        -          WALLINGFORD JCT.115
 73198 73410          1   12  F          /*SOUTHINGTON     115        -          SOUTHGTN13.8      13.8
 73198 73410          2   12  F          /*SOUTHINGTON     115        -          SOUTHGTN13.8      13.8
 73202 73164          1   12  F          /*FROST BRIDGE    115        -          BALDWIN TAP       115
 73202 73180          1   12  F          /*FROST BRIDGE    115        -          CARMEL        115
 73202 73183          1   12  F          /*FROST BRIDGE    115        -          SHAWS HILL        115
 73202 73189          1   12  F          /*FROST BRIDGE    115        -          FREIGHT       115
 73202 73200          1   12  F          /*FROST BRIDGE    115        -          NOERA JA          115
 73202 73205          1   12  F          /*FROST BRIDGE    115        -          NOERA JB          115
 73265 73334          1   12  F          /*GREEN HILL      115        -          STEPSTNE          115
 73668 73287          1   12  F          /*EAST SHORE      115        -          BRANFORD RR       115
 73668 73669          2   12  F          /*EAST SHORE      115        -          GRAND AVE.        115
 73679 73669          1   12  F          /*ENGLISH         115        -          GRAND AVE.        115
 73295 73297    1   12  F                /*BESECK          345        -          E.DEVON           345
```

### Southwest Connecticut Interface with Project Tapping Line #1238

```
'<SWCT-S-1238'        12
 73583 73115          1   12  F          /*NUTMEG          345        -          PLUMTREE          345
 73127 73204          1   12  F          /*SOUTHINGTONBRX115       -          TODD          115
 73128 73211          1   12  F          /*SOUTHINGTONB2R115       -          CANAL         115
 73154 73193          1   12  F          /*SGTN B 115        -        LUCCHINI          115
 73154 73409          1   12  F          /*SGTN B 115        -        SOUTHGTN27.6      27.6
 73154 73409          2   12  F          /*SGTN B 115        -        SOUTHGTN27.6      27.6
 73198 73196          1   12  F          /*SOUTHINGTON     115        -          GLEN LAKE         115
 73198 73631          1   12  F          /*SOUTHINGTON     115        -          WALLINGFORD JCT.115
 73198 73410          1   12  F          /*SOUTHINGTON     115        -          SOUTHGTN13.8      13.8
 73198 73410          2   12  F          /*SOUTHINGTON     115        -          SOUTHGTN13.8      13.8
 73202 73164          1   12  F          /*FROST BRIDGE    115        -          BALDWIN TAP       115
 91001 73180          1   12  F          /* NEW RING BUS   115        -          CARMEL        115
 73202 73183          1   12  F          /*FROST BRIDGE    115        -          SHAWS HILL        115
 73202 73189          1   12  F          /*FROST BRIDGE    115        -          FREIGHT       115
 73202 73200          1   12  F          /*FROST BRIDGE    115        -          NOERA JA          115
 73202 73205          1   12  F          /*FROST BRIDGE    115        -          NOERA JB          115
 73265 73334          1   12  F          /*GREEN HILL      115        -          STEPSTNE          115
 73668 73287          1   12  F          /*EAST SHORE      115        -          BRANFORD RR       115
 73668 73669          2   12  F          /*EAST SHORE      115        -          GRAND AVE.        115
 73679 73669          1   12  F          /*ENGLISH         115        -          GRAND AVE.        115
 73295 73297    1   12  F                /*BESECK          345        -          E.DEVON           345
```

This document may contain Critical Energy Infrastructure Information -Do Not Release

## Source and Sink

```
subsystem SOURCE-ROW
  bus 70368  /REST OF THE WORLD
end

subsystem SINK-SWCT_NNG
   bus 73568 /DVN1516
   bus 73569 /DVN1718
   bus 73553 /DVN1516
   bus 73554 /DVN1718
   bus 73570 /DEVGAS11
   bus 73571 /DEVGAS12
   bus 73572 /DEVGAS13
   bus 73573 /DEVGAS14
   bus 73574 /MILFD#1
   bus 73575 /MILFD#2
   bus 73652 /BE10
   bus 73653 /BE11
   bus 73654 /BE12
   bus 73647 /BRIDGEPORT HARBOR2
   bus 73648 /BRIDGEPORT HARBOR3
   SCALE ALL GENERATION
end
```

This document may contain Critical Energy Infrastructure Information -Do Not Release

Appendix

H

# Short Circuit Scope



This document may contain Critical Energy Infrastructure Information -Do Not Release

Report No. R67-07 Draft-Revised

# *Short Circuit Study Scope of the Proposed Biomass 32 MW Project (#191) Tapping 115kV Line 1191 or Line 1238 near Frost Bridge 115 kV Station in Connecticut*

Prepared for

**ISO New England, Inc.**

Submitted by:
Carlos Grande-Moran, Ph. D.
Octavio J. Gutierrez
Iman Khosravi

August 31, 2007
October 8, 2007, 1st Revision
November 2, 2007, 2nd Revision

Siemens PTI Project Number P/21-113177

**Siemens Power Transmission & Distribution, Inc.**
**Power Technologies International**
1482 Erie Boulevard • P.O. Box 1058
Schenectady, New York 12301-1058 US
Tel: 518-395-5000 • Fax: 518-346-2777
www.usa.siemens.com/PTI

SIEMENS

This document may contain Critical Energy Infrastructure Information -Do Not Release

This page intentionally left blank.

This document may contain Critical Energy Infrastructure Information -Do Not Release

# Contents

**Legal Notice** ..... iii

**Section 1 Introduction** ..... 1-1

**Section 2 Project Description** ..... 2-1

**Section 3 Power System Model** ..... 3-1

**Appendix A Generator Data** ..... A-1



This document may contain Critical Energy Infrastructure Information -Do Not Release

This page intentionally left blank.



This document may contain Critical Energy Infrastructure Information -Do Not Release

# Legal Notice

This document was prepared by Siemens Power Transmission & Distribution, Inc., Power Technologies International (Consultant), on behalf of ISO-NE with the intention of meeting the requirements of the ISO New England Transmission, Market and Services Tariff. None of Consultants, ISO-NE, nor their parent corporations or affiliates, nor any person acting in their behalf (a) makes any warranty, expressed or implied, with respect to the use of any information or methods disclosed in this document or (b) assumes any liability with respect to the use of any information or methods disclosed in this document, in either case except as set out in the aforementioned Tariff. None of Consultants or ISO-NE assumes any responsibility for any damages incurred by any entities other than those named in this Study.



This document may contain Critical Energy Infrastructure Information -Do Not Release

This page intentionally left blank.



This document may contain Critical Energy Infrastructure Information -Do Not Release

Section

1

# Introduction

This document presents the scope of the short circuit analysis for the interconnection to the New England transmission system of the Biomass 38 MW project (#191). The project will be located in Watertown, Connecticut.

Two interconnection options are being considered by the Developer:

**Option 1-** CL&P 115 kV Frostbridge - Carmel line #1238

**Option 2-** CL&P 115 kV Frostbridge – Campville line #1191

The Project includes one steam turbine coupled to a biomass fired boiler. In both interconnection options, the generating unit will be connected to the CL&P's 115 kV transmission network by way of a GST transformer and an overhead feeder.

The Project is expected to begin operation in January 2010. (Note: The developer requested to have the initial July 1, 2009 in-service date withdrawn).



This document may contain Critical Energy Infrastructure Information -Do Not Release

This page intentionally left blank.



This document may contain Critical Energy Infrastructure Information -Do Not Release

Section

2

# Project Description

The Project includes one new steam turbine coupled to a biomass fired boiler. The steam turbine will drive a generating unit rated at 50 MVA, 13.8 kV, and 0.85 power factor lagging. The net output of the new generator in the project is 34 MW when the steam turbine driven generating unit is operating at a summer ambient temperature of 50 °F or above. The maximum gross MW output for this steam turbine driven generating unit is 38 MW for a summer ambient temperature of 50 °F or above. Generator data is documented in Appendix A.

The interconnection point for this Project is at a tap on either the 115 kV circuit between Frostbridge and Carmel (line No. 1238) or the 115 kV circuit between Frostbridge and Campville (line No. 1191), as described below:

**Option 1-** CL&P 115 kV Frostbridge - Carmel line #1238

**Option 2-** CL&P 115 kV Frostbridge – Campville line #1191

The project and interconnection options are illustrated in Figures 2-1 and 2-2.

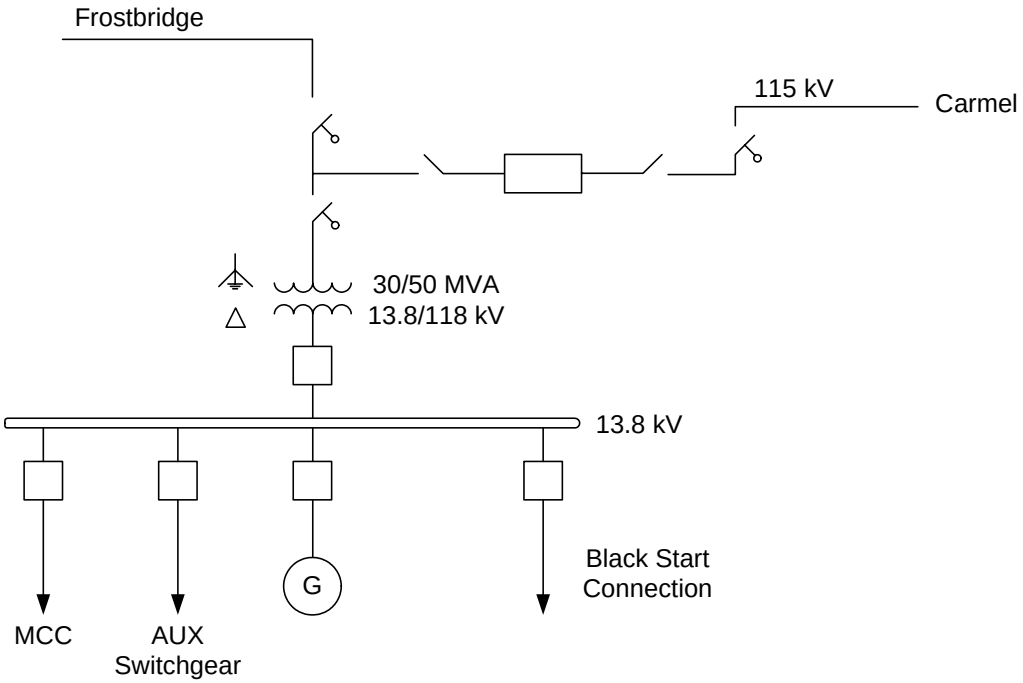


**Figure 2-1 Project and Interconnection Option 1 (Tap at Frost Bridge-Carmel line #1238)**



This document may contain Critical Energy Infrastructure Information -Do Not Release

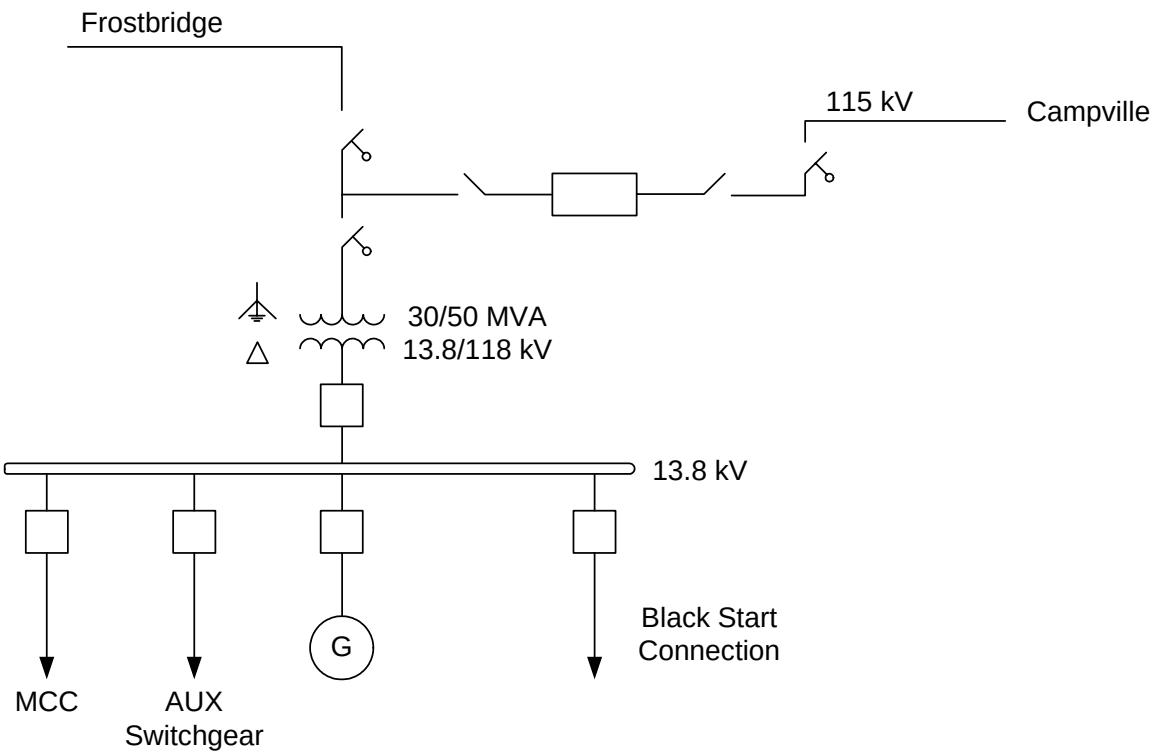


**Figure 2-2 Project and Interconnection Option 2 (Tap at Frost Bridge-Campville 115kV line #1191)**

The 1238 and 1191 lines have a length of about 10 miles. The tap on either line will be located at about 4,500 feet from Frostbridge Substation, this is, about 8.52% of the corresponding line length.

## GSU Transformer

The steam turbine-generator unit will be connected to the CL&P 115 kV transmission system through a generator step-up (GSU) transformer substation rated 30/50 MVA OA/FOA, 13.8/118 L-L kV. The winding connections for the transformer substation are delta on the low voltage side and solidly grounded- wye on the high voltage side. The transformer unit is furnished with five off-load taps on its high voltage winding, as follows: 112/115/118/121/124 kV. The nominal tap position is 118 kV.

Positive sequence leakage impedance magnitude is equal to 9.0% on a 30 MVA power base and 118 kV/13.8 kV voltage base, with a $X_1/R_1$=25. Its zero sequence impedance magnitude is 9.0% on a self-cooled rating of 30 MVA with a $X_0/R_0$ of 25.

## Feeder

An overhead feeder ACSR 336.4 MCM will be connecting the GSU transformer to a tap at either the Frostbridge – Carmel 115 kV transmission line or the Frostbridge - Campville 115 kV transmission line. The feeder will have an estimated length of about 1500 ft.



This document may contain Critical Energy Infrastructure Information -Do Not Release

The estimated positive and zero sequence series impedance and charging capacitance for this feeder are as follows:

| | | |
|---|---|---|
| R1 = 0.00060 pu | X1 = 0.00168 pu | B1 = 0.00253 pu |
| R0 = 0.00185 pu | X0 = 0.004000 pu | B0 = 0.00162 pu |

The per unit impedance and charging susceptance values are computed on a 100 MVA system apparent power base and 115 kV voltage base.

.



This document may contain Critical Energy Infrastructure Information -Do Not Release

This document may contain Critical Energy Infrastructure Information -Do Not Release

Section`

3

# Power System Model

The short circuit studies for this Project will use the load flow base case network topology and all existing and expected generation as required by ISO-NE and NEPOOL criteria.

The study will be performed with the Middletown-Norwalk (M-N) transmission project in service. Scenarios with and without the Project will be studied in order to evaluate the impact of the project on the short circuit duty of circuit breakers in the transmission and sub-transmission networks of the study area.

**Transmission Projects to Include in Short Circuit Study**

The following is the list of proposed transmission projects to be included in the short circuit studies:

- Cross Sound Cable
- Glenbrook STATCOM
- New 1385 Line Cables
- Haddam Autotransformer
- Bethel-Norwalk (Phase I) 345 kV Circuit
- Killingly Autotransformer
- Plumtree-Triangle Area Changes
- Glenbrook - Norwalk -2 115 kV Cable Addition
- Middletown-Norwalk (Phase II) 345 KV Circuit
- Barbour Hill Autotransformer
- Wilton project
- United Illuminating transformer substation at Trumbull



This document may contain Critical Energy Infrastructure Information -Do Not Release

**Generation Projects to Include in Short Circuit Study**

The following generators will be included in the short circuit studies:

- Gas Turbine #115, 49 MW, Norwalk 27.6 kV Substation
- Combined Cycle # 95, 620 MW, 345 kV, sectionalizing the 353 Line
- Gas Turbine #104, 180 MW, Waterside 115 kV Substation
- Gas Turbine #125, 115 MW, Cos Cob 115 kV Substation
- Gas Turbine #140, 100 MW, Wallingford Substation
- Devon 10
- UTC Fuel Cell Aquarion Water Co.
- UTC-P&W
- Gas Turbine #125, 330 MW, 345kV Norwalk Station
- Wind Project #145, 51 MW, CL&P, 115kV 1607 line
- Biomass #150, 37.5 MW, CL&P, Fry Brook Substation
- Fairfield University DG
- Gas Turbine #159, 352.4 MW, Singer 345kV Substation
- Gas Turbine #160, 86 MW, CL&P, Middletown 115kV Substation
- Gas Turbine #161, 200 MW, Devon 115kV Substation
- Gas Turbine #161, 112 MW, CL&P, Middletown 115kV Substation
- Gas Turbine #161, 224 MW, CL&P Middletown 345kV Substation
- Combined Cycle #161, 332 MW, Montville 345 kV Substation
- Gas Turbine #175/182, 223 MW, CL&P, at a tap on the Long Mountain - Plumtree 345 kV line
- Gas Turbine & Hydro #186, 100 MW/48 MW, CL&P, Shepaug 115 kV Substation
- Gas Turbine #190, 39 MW, CL&P, Falls Village 69 kV Substation
- Gas Turbine #190, 156 MW, Mt. Tom 115 kV Substation
- Gas Turbine #190, 39 MW, CL&P, Stevenson 115 kV Substation



This document may contain Critical Energy Infrastructure Information -Do Not Release

- Gas Turbine #190, 39 MW, CL&P, Tunnel 115 kV Substation

Additionally, the following cables should be included in the power system model:

1. 345 kV cable for the interconnection of the Norwalk Harbor Station Re-development project.
2. The Glenbrook-Norwalk 115 kV cable
3. The 1385 Long Island cable

Series impedances and charging capacitances of the cables mentioned above are documented in previous short circuit scopes.



This document may contain Critical Energy Infrastructure Information -Do Not Release

This page intentionally left blank



This document may contain Critical Energy Infrastructure Information -Do Not Release

Appendix

A

# Generator Data

This appendix includes the generator stability data and transformer generator step-up transformer sequence impedance data.

The effective positive sequence armature resistance for synchronous turbo-generating units will be estimated from the equation suggested in the IEEE Power Engineering Society Tutorial Course on Applications of Power Circuit Breakers 93 EHO 388-9-PWR, pp.26

$$R_{eff} = \frac{X_{2v}}{2\pi f * T_{a3}} \text{ pu}$$

Where,

$X_{2v}$ is the negative sequence saturated reactance in pu on a generator terminal voltage base and generator MVA base.

f is the system operating frequency in Hz.

$T_{a3}$ is the three-phase armature time constant in seconds.

**Generator Parameters**

The parameters shown below were provided by the developer in 9/25/07 email. These parameters are documented in the referenced email and in the revised Appendix B Attachment sent with the email. The revised Appendix B Attachment is included in this Scope.

The three-phase armature time constant $T_{a3}$, sequence armature resistances, positive, R1, negative, $R_2$, and zero, $R_0$, are as follows, on 50 MVA and 13.8 kV base:

$T_{a3}$ = 0.188 seconds

$R_1$ = 0.0042 per unit

$R_2$ = 0.0195 per unit

$R_0$ = 0.01 per unit

The saturated negative reactance and saturated zero sequence reactance for the project generating units are as follows:



This document may contain Critical Energy Infrastructure Information -Do Not Release

$X_{2v}$ = 0.161 per unit,

$X_{0v}$ = 0.103 per unit,

Saturated generator reactances are as follows:

$X_{dv}$ = 0.214 per unit,

$X_{qv}$ = 1.93 per unit,

$X'_{dv}$ = 0.263 per unit,

$X'_{qv}$ = 0.431 per unit,

$X''_{dv}$ = 0.153 per unit,

$X''_{qv}$ = 0.169 per unit

The Project generating unit is assumed grounded through a high resistance to limit armature currents to 5 to 10 A for a close-in phase to ground fault. The grounding resistance value is selected as equal to (1/3) the phase to ground capacitive reactance of the generator, GSU transformer windings, leads and surge capacitors, whenever they are furnished with the generating units. A conservative value for the phase to ground capacitance based on the generator's phase to ground capacitance was selected since the capacitance to ground of the GSU transformers and leads is unknown.

$C_{ph\text{-}g}$ = 0.397 μF and $R_g$ = 2,227 Ω



This document may contain Critical Energy Infrastructure Information -Do Not Release

## LARGE GENERATING FACILITY DATA
## UNIT RATINGS

| | | | | | |
|---|---|---|---|---|---|
| kVA | 50,000 | °F 104 | | Voltage | 13,800 |
| Power Factor | 0.85 | | | | |
| Speed (RPM) | 3,600 | | | Connection (e.g. Wye) | Wye |
| Short Circuit Ratio | 0.47 | | | Frequency, Hertz | 60 |
| Stator Amperes at Rated kVA | | 2092 | | Field Volts | 125 |
| Max Turbine MW | 42,000 | °F 104 | | | |

## GREATEST UNIT RATING AT AMBIENT TEMPERATURE OF 50°F OR ABOVE

| | | | |
|---|---|---|---|
| Gross Unit Rating (MW) | 38 | Gross Lagging (MVAR) | 32 |
| Net Unit Rating (MW) | 34 | Gross Leading (MVAR) | 20 |
| Station Service (MW) | 4 | Station Service (MVAR) | 2.4 |
| Temperature (°**F**) | 90 | | |

## REACTANCE DATA (PER UNIT-RATED KVA)

| | **DIRECT AXIS** | **QUADRATURE AXIS** |
|---|---|---|
| Subtransient – saturated | X”dv 0.153 | X”qv 0.169 |

## GENERATOR STEP-UP TRANSFORMER DATA RATINGS

Capacity Self-cooled/Maximum Nameplate
30,000 / 50,000 kVA

Voltage Ratio (Generator side/System side/Tertiary)
13.8 / 118 kV

Winding Connections (Low V/High V/Tertiary V (Delta or Wye))
Del/Wye

Fixed Taps Available 112/115/118/121/124

Present Tap Setting 118

## IMPEDANCE

Positive Z1 (on self-cooled kVA rating) 9 % 25 X/R

Zero Z0 (on self-cooled kVA rating) 9 % 25 X/R

This document may contain Critical Energy Infrastructure Information -Do Not Release