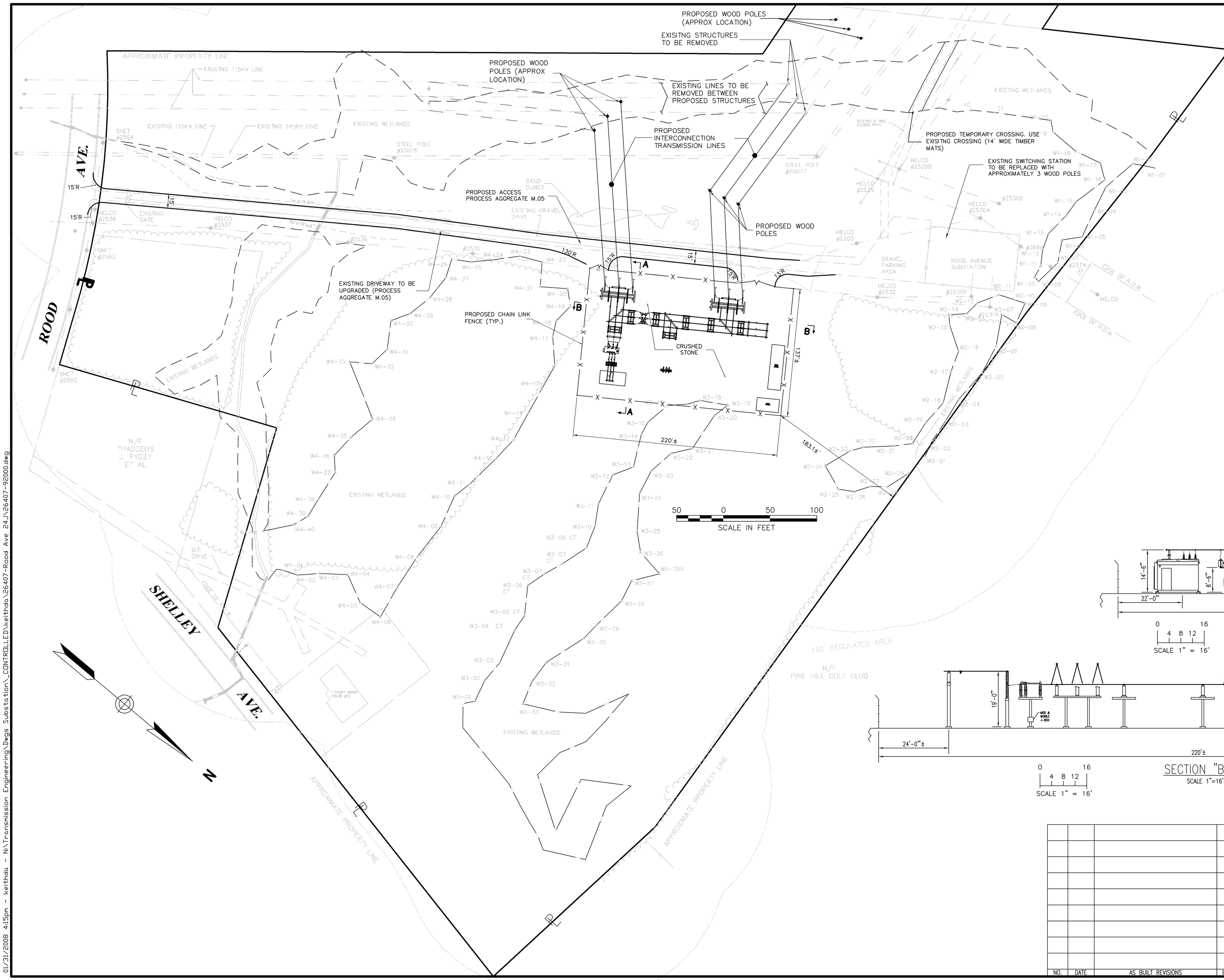

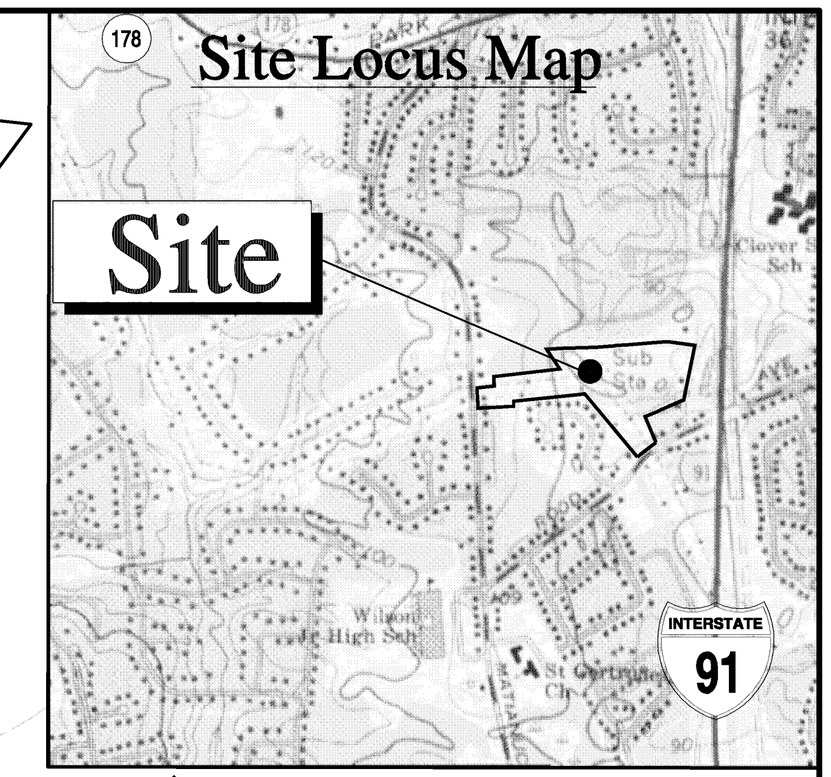

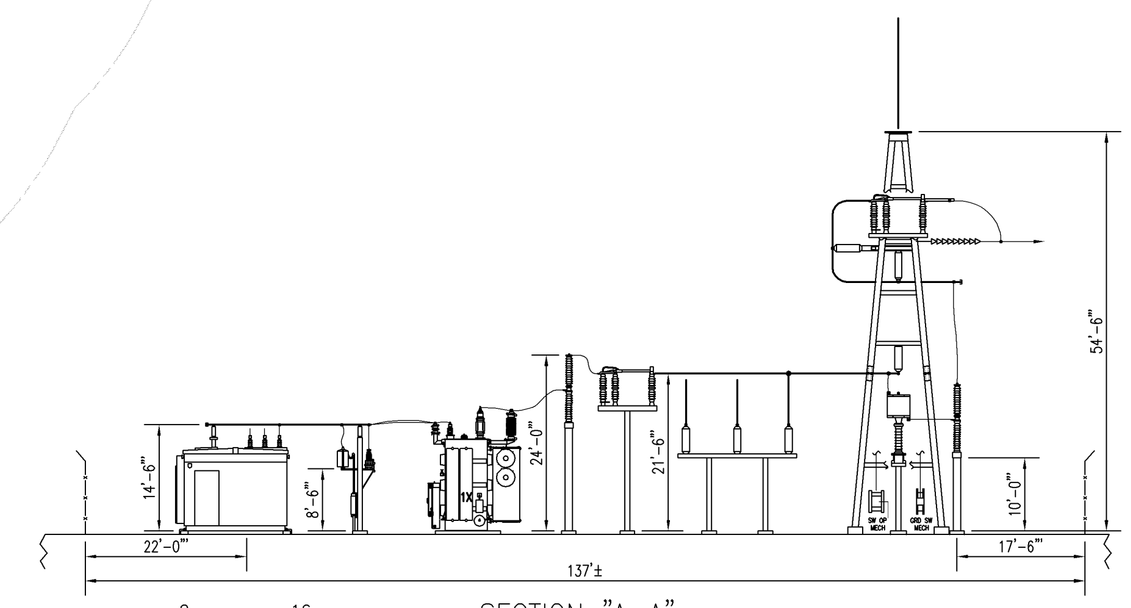

SECTION "A-A"
SCALE 1"=16'

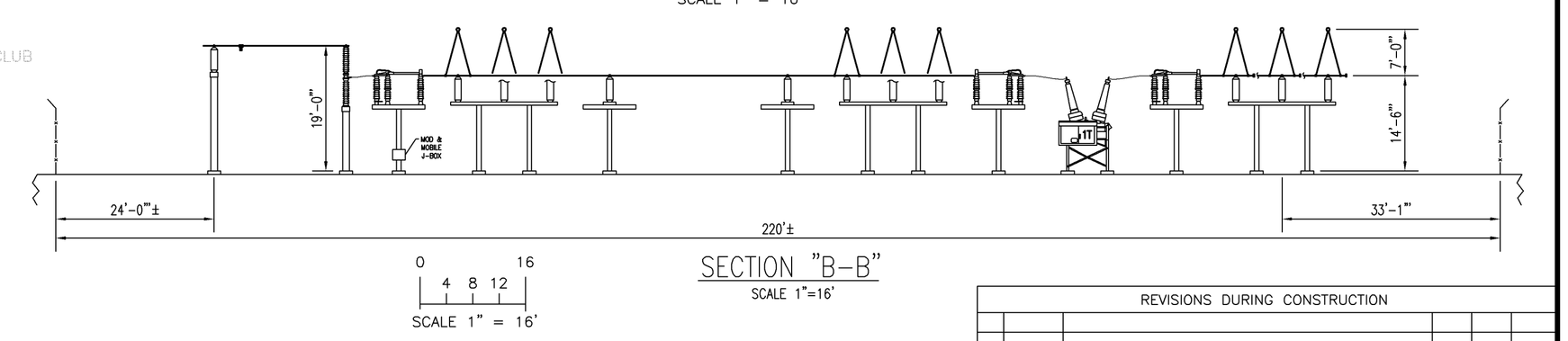

SECTION "B-B"
SCALE 1"=16'

REVISIONS DURING CONSTRUCTION					

NO.	DATE	AS BUILT REVISIONS	BY	CHK	APP	APP

Northeast Utilities Service Co.

FOR

CONNECTICUT LIGHT & POWER COMPANY

TITLE

ROOD AVENUE 24J
GENERAL ARRANGEMENT - CSC
PLAN & SECTIONS
WINDSOR, CONNECTICUT

BY	DAK	CHKD	PLW	APP	KA	APP
DATE	1/08	DATE	1/08	DATE	1/08	DATE
H-SCALE	AS NOTED	SIZE	D	FIELD BOOK & PAGES		
V-SCALE	AS NOTED	V.S.		R.E.DWG.		
R.E. PROJ. NUMBER				NUSCO	26407-92000	

01/31/2008 4:15pm - keithdo - N:\Transmission Engineering\Dwgs Substation_CONTROLLED\keithdo\26407-Rood Ave 24J\26407-92000.dwg