Development & Management Plan

for the

Installation and Operation of Two 50 MW Peaking Units at an Existing Facility In Wallingford, Connecticut

Connecticut Siting Council
Petition No. 1183

Submitted by:
Wallingford Energy II, LLC

September 2, 2016

WALLINGFORD ENERGY, LLC

DEVELOPMENT & MANAGEMENT PLAN

TABLE OF CONTENTS

I. INTRODUCTION 1

A. Project Overview 1

II. PLAN DETAILS AND DRAWINGS 2

A. Key Map 2

B. Plan Drawings 2

D. Public Roads and Lands 2

E. Grading Plan 3

F. Structure and Foundation Locations 3

G. Access Points for Construction 4

H. Material Laydown Area 4

I. Vegetation and Clearing 5

J. Environmentally Sensitive Areas 5

K. Existing Underground Utilities 6

L. Erosion and Sediment Control Plan 6

III. CONSTRUCTION AND REHABILITATION 6

A. Demolition 6

B. Site Grading and Drainage 7

1. Site Grading 7

2. Site Drainage 8

3. Erosion Control 8

C. Foundations 9

D. Underground Utilities 10

E. Construction Traffic 10

F. Construction Sequencing 12

G. Construction Hours 13

H. Construction Schedule 13

I. Rehabilitation Plans 13

IV. PROCEDURES FOR NOTICES AND REPORTS 13

A. Advance Notice of Construction Activities 13

B. Modifications to D&M Plan 13

C. Municipal Notification 14

D. Landowner Notification 14

E. Notice of Completion 14

F. Final Report 14

APPENDICIES

Appendix A: Plan Drawings

Exhibit 1: Key Map

Exhibit 2: Existing Conditions Plan

Exhibit 3: Overall Site Plan

Exhibit 4: Site Plan

Exhibit 5: Grading & Utility Plan

Exhibit 6: Landscaping Plan

Exhibit 7: Soil Erosion & Sediment Control Plan

Exhibit 8: Soil Erosion & Sediment Control Details

Exhibit 9: Material Laydown and Site Access

Exhibit 10: Filter/Separator and Low Flow Meter Modification

Appendix B: Construction Details

Exhibit 1: Foundation Plans

Exhibit 2: Construction Schedule

Exhibit 3: Artist's Renderings

Appendix C: Stormwater Management

Exhibit 1: Site Engineering and Stormwater Management Report

STATE OF CONNECTICUT
CONNECTICUT SITING COUNCIL

D&M PLAN SUBMITTED BY WALLINGFORD ENERGY II, LLC FOR THE INSTALLATION AND OPERATION OF TWO 50 MW PEAKING UNITS AT AN EXISTING FACILITY IN WALLINGFORD, CONNECTICUT	PETITION NO. 1183 September 2, 2016

DEVELOPMENT AND MANAGEMENT PLAN

I. INTRODUCTION

Wallingford Energy II, LLC ("WE II") hereby submits this Development and Management ("D&M") Plan to the Connecticut Siting Council (the "Council") for the installation and operation of two additional electric generating units of approximately 50 megawatts ("MW") each (the "Project") at the existing generating facility owned and operated by an affiliate, Wallingford Energy, LLC in Wallingford (the "Facility"). The D&M Plan detailed herein has been developed in accordance with the Council's conditions of approval for Petition No. 1183. The Project is being developed primarily to help satisfy capacity and fast-start operating reserve needs in the State of Connecticut and New England.

A. Project Overview

The Project, consisting generally of two simple cycle aeroderivative combustion turbine generators (CTG's), two SCR/CO emissions control systems, one new BOP switchgear enclosure, one generator step-up transformer, and site work, will reside on a parcel of land leased by Wallingford Energy, LLC in Wallingford, CT which presently supports five (5) simple cycle GE LM6000PC SPRINT aeroderivative gas turbines and appurtenant equipment.

II. PLAN DETAILS AND DRAWINGS

Detailed in the sections below are the existing site conditions as well as the construction and development activities that will take place.

A. Key Map

The Facility and Project are located at 115 John Street in the Town of Wallingford, Connecticut. The location is shown on the Key Map provided as Exhibit 1 in Appendix A (the "Project Site").

B. Plan Drawings

Provided herein are several drawings which detail the following project elements: Overall Site Plan (Appendix A, Exhibit 3); Site Plan (Appendix A, Exhibit 4); Grading & Utility Plan (Appendix A, Exhibit 5); Landscaping Plan (Appendix A, Exhibit 6); Soil Erosion & Sediment Control Plan (Appendix A, Exhibit 7); Soil Erosion & Sediment Control Details Details (Appendix A, Exhibit 8); Material Laydown and Site Access (Appendix A, Exhibit 9); and Filter/Separator and Low Flow Meter Modification (Appendix A, Exhibit 10).

C. Land Ownership

Wallingford Energy, LLC leases from the Town of Wallingford approximately 8.5 acres that is currently used for the Facility. Pursuant to agreements with the Town of Wallingford, Wallingford Energy II, LLC intends to be a sublessee of the Project Site in connection with the Project. The physical footprint of the existing Facility covers approximately 4.3 acres of the 8.5 acre Project Site; the Project will utilize approximately 0.9 additional acres of land area on the overall property for the Project's two proposed generating units. Additionally, portions of the broader Facility site will be used for minor relocations of existing equipment and the addition of new Project equipment, such as a generator step-up transformer.

D. Public Roads and Lands

The Project Site is bounded by the CMEEC Alfred Pierce Generating Station and East St. to the east, John St. and private access road to the south, and by the private ThermoSpas Access Road to the north and northwest.

The Project Site is zoned industrial, designated by the Town of Wallingford as an Industrial District I-40. Land to the north, south and west of the Project Site lies within the industrial district and is mostly developed for industrial uses such as manufacturing, the CMEEC Alfred Pierce Generating Station, the Town of Wallingford wastewater treatment plant and the Town's capped landfill. Properties to the east of the Project Site, across East Street, are zoned residential. Landscaping and screening walls on the Project Site and its parent tract help screen views from these non-industrial properties.

E. Grading Plan

Given the Project Site has been previously developed and already has a relatively flat general topography, little additional grading will be required. A landscaped berm along ThermoSpas Access road will be moved northward to facilitate the installation of the new generation equipment as well as the Project's new acoustic and visual screening wall. See Exhibit 5 in Appendix A for additional grading details.

F. Structure and Foundation Locations

The equipment and structural installations proposed as part of this Project are largely identical to those already present at the Project Site. Anticipating geotechnical conditions similar to those present at the time of the existing Facility's construction, the Project foundation specifications will generally match those of the Facility. As such, Appendix B Exhibit 1 provides the existing Facility's foundation drawings and specifications for the structures and equipment that will be installed as part of this Project. Should the Project's final foundation designs substantively deviate from those shown in Appendix B, WE II will notify the Council and provide details of the proposed changes.

Equipment and structure locations shown in WE II's petition to the Council are shown in the final site plan provided within Appendix A. Updates compared to the Petition plans

include new locations for the BOP switchgear building, wastewater tank, auxiliary transformers, and the fire hydrant and Fire Department Connection (standpipe). The BOP switchgear building and wastewater tank locations have been modified to accommodate the needed clearances and access requirements to facilitate maintenance on the new generating units. For this same reason two auxiliary transformers have now been located outside of the northern portion of the new sound wall. Given the limited sound power levels from the auxiliary transformers, their updated positioning is not expected to significantly impact noise levels such that noise levels are to remain below regulatory thresholds. The locations of the fire hydrant and Fire Department Connection (standpipe) were updated to address comments received from representatives of the Town of Wallingford's Fire Prevention Bureau.

Further, the filter/separator and low flow meter run at the Spectra Energy meter station, which currently feeds the existing Facility and will supply the Project as well, will be replaced. The details of this modification are provided in Appendix A Exhibit 10.

G. Access Points for Construction

WE II intends to use property adjacent to and north of the ThermoSpas Access Road for construction laydown and contractor parking. This area has been used for these purposes previously during the construction of the Facility, as well as the adjacent Pierce Station repowering. Incoming construction traffic, including deliveries, would therefore primarily access the proposed construction parking and laydown site via South Colony Road to John Street and finally to East Street. Traffic between the laydown area and Project Site will primarily be across private property to minimize traffic impacts on public roadways. The construction laydown area and site access are illustrated in Exhibit 9 of Appendix A.

H. Material Laydown Area

The planned laydown area is located north of the ThermoSpas Access Road directly across from the Project site. As depicted in Exhibit 9 of Appendix A, WE II has secured

an approximately 3.7 acre area composed of previously disturbed land used for construction laydown and parking purposes. This space will be utilized to store and maintain equipment and materials to support Project construction. Further, this lot will provide an area for contractor parking and temporary offices for the Project.

I. Vegetation and Clearing

Presently no clearing of vegetation is anticipated at the Project Site. The limited amount of vegetation that does exist at the Project Site is found within landscaped areas. Most existing landscaping around the Project Site, including the coniferous tree-lined berms predominantly screening views from the residential area along East Street, will remain intact. The existing screening trees atop the current berm along ThermoSpas Access Road on the northern portion of the Project Site will be relocated, if possible, further north to allow room for the two additional CTs and the Project's acoustic and visual screening wall; the relocated trees are shown on the Landscaping Plan provided as Exhibit 6 in Appendix A. If the existing trees are unable to be relocated, new plantings of the same type will be used.

J. Environmentally Sensitive Areas

As an already developed industrial property the Project Site does not include any areas that may be defined as environmentally sensitive. There no wetlands, watercourses, areas of high erosion potential, known critical habitats, or significant historical or ecological features present at the Project Site.

As was detailed within the Phase I Environmental Site Assessment Report provided to the Council as part of the initial Petition, there is historic soil contamination known to be present at the Project Site. This has been largely addressed through previous site development activities and has been evaluated in a number of environmental investigations. Nevertheless, to minimize any potential environmental impact WE II will implement direct loading of excavated materials for transport to a pre-selected receiving facility. Soils at the site will be pre-characterized via in-situ testing. Results from these

tests will be utilized to prepare a soil management plan to facilitate proper management and disposal of excavated material, adhering to all applicable regulatory criteria.

K. Existing Underground Utilities

Existing underground utilities currently located at the Project Site are illustrated in Exhibit 5 of Appendix A. As shown in this exhibit, two water mains will need to be relocated in order to accommodate the Project. These installations will conform to the Technical Standards and Detail Sheets of the Town of Wallingford, Water and Sewer Divisions.

L. Erosion and Sediment Control Plan

Erosion and sediment control measures to contain runoff are depicted on the Soil Erosion & Sediment Control Plan and Details (Appendix A, Exhibits 7, 8, and 9). These drawings contain detailed information on the location, type, and design of erosion and sediment control measures that will be employed during construction. All implemented measures will comply with the 2002 Connecticut Guidelines for Soil and Sediment Control, as amended. Following the earlier of each storm event or once weekly, all sediment and erosion controls will be inspected. Any corrective actions to mitigate environmental concerns will be ordered by the site engineer or site E&S control monitor.

III. CONSTRUCTION AND REHABILITATION

Construction procedures for the Project are summarized in the sections below and illustrated within Appendix B.

A. Demolition

As is evident from review of the Existing Conditions Plan (Appendix A, Exhibit 2), some of the existing site elements will need to be removed or modified to facilitate construction of the Project. This includes the re-routing of two underground water mains, the removal of the two northern most landscaped berms, and the re-routing of the plant internal circulation road at the northern end of the site. Two monitoring wells, which are no

longer in use, will also need to be properly capped. Construction will not necessitate that any structures be demolished. All wastes generated during demolition will be disposed of at appropriate off-site disposal facilities.

B. Site Grading and Drainage

The Project Site grading plan: establishes a uniform, stable working surface as required in active Project areas; provides capable bearing surfaces for Project foundations; places Project foundations at design elevations; provides for positive drainage around Project buildings and other structures; and provides adequate soil cover for Project underground utilities.

The Project Site grading and drainage may consist of, but is not limited to, the following major components:

- Excavations and fills
- Roads and parking area sub-grades
- Site stormwater drainage works
- Ditches and culverts
- Landscaping berms

The drainage system directs runoff from roof drains and Project areas to the stormwater runoff collection system.

1. Site Grading

Topsoil will be excavated and re-used on-site except in cases of excess topsoil or when sampling shows that it must be disposed of off-site. To the maximum extent possible, suitable excavated materials will be used for general fill. As required, additional material will be imported to the Project Site and compacted fill will be placed as necessary to provide the desired grades for the site. In the power block area, a minimum 1% slope will normally be provided. In other areas, a 0.5% slope will normally be provided.

The grading to be completed will consist of major excavations for below grade structures and installation of a capable subgrade for soil supported structures and roadbeds. Little to no grading is expected to be required at the laydown area.

Imported fill material, consisting of suitable soils, sand, slag, and gravel will be used for subgrade improvements and backfill where in-situ materials are not suitable. Installation of imported fill material will be controlled with regard to material type, compaction, and stability as required to achieve the subgrade required by the final design.

2. Site Drainage

The Project Site will be graded to appropriately manage stormwater runoff and provide positive drainage for Project areas.

Culverts will be used to pass flows under roads and other locations where surface conveyance would not be practical. The cross-sectional shape of open channels (ditches or swales) is to be trapezoidal or triangular. Side slopes will be as required for stability and erosion protection and are to include grass cover. To protect the integrity of the channels, paving or crushed stone will be employed where necessary. Stormwater drainage from the Project Site will be limited to rates no greater than that experienced prior to construction by the stormwater management system.

The Project's stormwater drainage plan will interface with that of the existing Facility, and is detailed in the Site Engineering and Stormwater Management Report enclosed as Appendix C.

3. Erosion Control

Temporary facilities will be provided to control erosion and turbid runoff during earthwork operations and from graded areas until they are surfaced or seeded. During construction, all stormwater discharges will be in compliance with construction-related permits. Temporary facilities will include those detailed within Appendix A, Exhibits 7, 8, and 9.

Permanent erosion control facilities for ditches and slopes will include seeding and other erosion control facilities as required such as riprap, headwalls, rock surfacing, slope pavement, drainage terrace pavement, etc.

C. Foundations

As noted earlier in the D&M Plan, foundations are expected to be largely identical to those already present for equipment and structures of the same type at the Facility. The methodology that is to be employed in designing the foundations is detailed below.

Foundation systems will consist by of the following types, according to loading requirements and geotechnical conditions:

- Shallow spread and strip footings
- Mat foundations
- Deep pile foundations or slab foundations based on geo-tech results.
- Floor slabs

Foundations will be designed using reinforced concrete to resist the loading imposed by the building, structure, or equipment being supported. The foundation design will incorporate the following considerations, as appropriate:

- Soil bearing capacities
- Soil swelling characteristics
- Pile capacities
- Active and passive lateral earth pressures
- Allowable settlements
- Structure, equipment, and environmental loadings
- Equipment performance criteria
- Access and maintenance

- Temporary construction loading
- Transition to adjacent existing structures.

D. Underground Utilities

Underground utilities (duct bank, conduit, pipe, etc.) are to be buried per the applicable standards for minimal burial depth, unless special provisions are provided and approved to protect the underground utilities. The contractor will be responsible for ensuring routing of all new underground utilities associated with the Project do not interfere with the underground utilities for the existing Facility.

E. Construction Traffic

The Project is expected to have a minimal impact on traffic levels of service. Construction is temporary with a relatively short duration approximately a year in total. Table 1 provides an estimate of the daily construction workforce and average deliveries by construction month.

Table 1: Estimated Daily Construction Traffic

Construction Month	Average Workers per Day	Average Deliveries per Day*
1	7	2
2	9	2
3	33	3
4	65	4
5	65	3
6	65	2
7	65	1
8	65	1
9	48	1
10	23	1
11	23	2
12	11	2
Overall Maximum	65	4
Overall Average	40	2.00

* Average deliveries are rounded up to the next whole number assuming 22 working days per month
**Conservative maximum estimate, likely corresponding to concrete pours or SCR delivery

According to the Town of Wallingford Economic Development office, the industries adjacent to the Project Site, now or formerly known as ThermoSpas and Allegheny Ludlum, reached a peak employment of 266 and 185, respectively, within the last ten years. The peak traffic generated during construction of the Project, about 123 workers and deliveries, is expected to be less than half of what the adjacent industries generated along the same roadways on a permanent basis in recent years. Therefore, WE II does not

expect construction traffic to exceed that of the previous normal operations of these industries.

F. Construction Sequencing

1. Flag limits of construction. Schedule pre-construction meeting with representatives of the owner, contractor, engineer and local authority.
2. Hold pre-construction meeting prior to any site disturbance. Review erosion control plan and discuss scheduling of site inspections during construction activities.
3. Install construction entrance.
4. Install perimeter erosion and sedimentation controls in accordance with the E&S control plan.
5. Begin excavation and construction of fill embankments. Establish sub-grade elevations for topsoil areas and roadways as required and prepare structure and turbine areas.
6. Complete all structure and turbine foundation construction.
7. Install underground utilities (sanitary, water service, storm drain system and other utilities).
8. Place all engineered equipment on foundations and complete mechanical and electrical fit out.
9. Prepare sub-base, slopes, driveway areas and other areas of disturbance for final grading.
10. Install driveway area base materials and compact.
11. Place topsoil where required. Complete perimeter landscaping.
12. Upon substantial completion of the structure complete the balance of the site work and stabilization of all other disturbed areas. Install first course of asphalt paving.
13. When all other work has been completed, repair and sweep all paved areas for the final course of paving. Inspect the drainage system and clean as needed.
14. Install final course of pavement.
15. After site is stabilized remove temporary erosion and sediment controls.

G. Construction Hours

Typical daily construction hours will between 6:00 AM and 10:00 PM, Monday through Friday. During certain phases of construction, such as work on interconnecting utilities, these hours may need to be temporarily extended.

H. Construction Schedule

A construction schedule has been provided as Exhibit 2 of Appendix B.

I. Rehabilitation Plans

Grass will be planted on areas not subject to vehicle or foot traffic. Walkways and driveways will be of crushed stone or concrete. Project structures and equipment will generally match the architectural character of the existing Facility. Photographs of the Project Site and visual renderings of the Project are included as Exhibit 3 of Appendix B.

IV. PROCEDURES FOR NOTICES AND REPORTS

In accordance with Sections 16-50j-60 through 16-50j-62 of the Regulations of Connecticut State Agencies, the following procedures for providing notice and required reports will be satisfied.

A. Advance Notice of Construction Activities

The Council will be provided with written notification a minimum of two weeks before the commencement of the following activities:

1. Clearing and access work in each successive portion of the site
2. Project construction in that same portion

B. Modifications to D&M Plan

If the need to significantly modify the D&M Plan arises, WE II will submit the proposed changes to the Council for review and approval. Changes not viewed as significant will

be reported to the Council via telephone or in writing. WE II will not act to implement these minor changes until the Council has been provided notification.

C. Municipal Notification

Notice will be provided to the Town of Wallingford, in writing, a minimum of one week prior to the commencement of construction activities at the Project Site.

D. Landowner Notification

Notice will be provided to adjoining landowners, in writing, a minimum of one week prior to the commencement of construction activities at the Project Site.

E. Notice of Completion

Written notice of completion will be provided to the Council once all construction activities have concluded.

F. Final Report

The Council will be provided with a final report for the Project no later than 180 days after the completion of construction and rehabilitation activities. Per Section 16-50j-62 of the RCSA, the report will identify the following:

1. All agreements with abutters or other property owners regarding special maintenance precautions;
2. Significant changes of the D&M plan that were required because of the property rights of underlying and adjoining owners or for other reasons;
3. The location of construction materials which have been left in place including, but not limited to, culverts, erosion control structures along watercourses and steep slopes, and corduroy roads in regulated wetlands;
4. The location of areas where planting and reseeding have been done; and
5. The actual construction cost of the facility if required by the Council

Appendix A: Plan Drawings

Exhibit 1 - Key Map

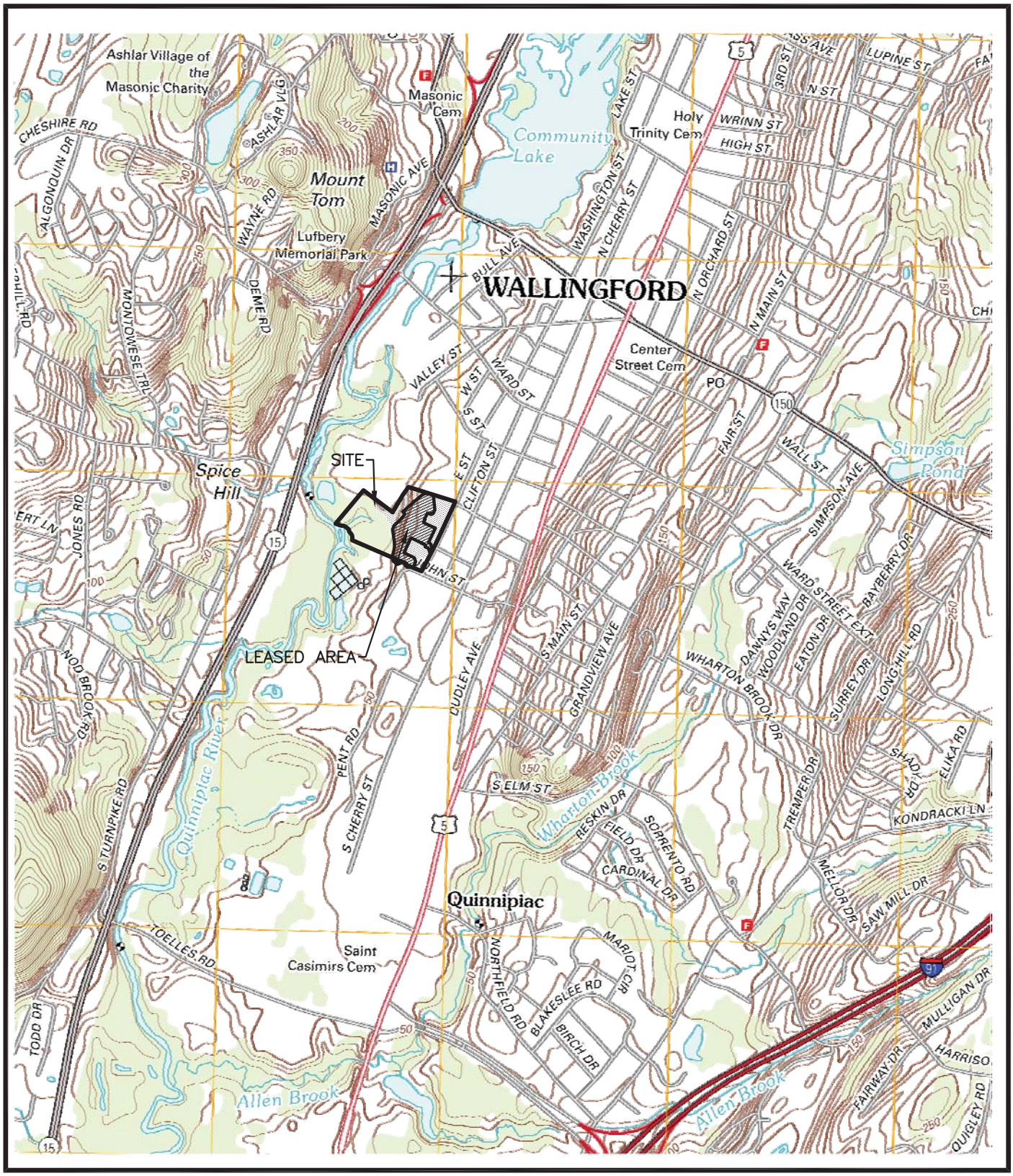

GODFREY HOFFMAN ASSOCIATES, LLC

PROFESSIONAL LAND SURVEYORS & CIVIL ENGINEERS
26 BROADWAY NORTH HAVEN, CT 06473
TEL: 203.239.4217 FAX: 203.234.2088 WWW.GODFREYHOFFMAN.COM

KEY MAP

WALLINGFORD ENERGY II, LLC

DRAWN BY:	MP
CHECKED BY:	JR
SCALE:	1"=2000'
PROJECT:	15-011
DATE:	6-2-2015

Exhibit 2 – Existing Conditions Plan

American National

Commercial Real Estate
Due Diligence Management

4125 State Route 43
Kent, OH 44240

866.290.8121
www.amnational.net

ALTA/ACSM Land Title Survey

Surveyor Certification

Wallingford Energy LLC
115 John St
Wallingford Center, CT
County of New Haven

To: Stewart Title Guaranty Company, a TX corporation, General Electric Capital Corporation, its successors and/or assigns as their interest may appear, Wallingford Energy LLC., and American National, LLC, this is to certify that this map or plat and the survey on which it is based were made in accordance with "Minimum Standard Detail Requirements for ALTA/ACSM Land Title Survey", jointly established and adopted by the American Land Title Association, the American Congress on Surveying and Mapping and the National Society of Professional Surveyors in 2005; and includes items 1, 2, 3, 4, 6, 7a, 7b1, 7c, 8, 9, 10, 11a, 13, 16, 17, 18 of Table A thereof. Pursuant to the Accuracy Standards as adopted by ALTA, NSPS, and ACSM and in effect on the date of this certification, undersigned further certifies that the survey measurements were made in accordance with "The Minimum Angle, Distance and Closure Requirements for Survey Measurements which control land boundaries for ALTA/ACSM Land Title Surveys."

Jack W. Shoemaker
Land Surveyor Number 70323
In State of Connecticut
Date of field survey: December 16, 2010
Date of last revision: June 1, 2011
Date of this Printing: June 1, 2011
Network reference # 20100239-002

Survey prepared by:
First Order, LLC
1700 Sullivan Trail
Easton, PA 18040
Project No. 1981

Legal Description

98-160 Metes & Bounds Description PRELIMINARY REVISED TO 9/13/00 Area To Be Leased By Wallingford Energy LLC #179 East Street, Wallingford, Connecticut

Beginning at a point on the northerly streetline of East Street, said point marks we common front property corner of Allegheny Ludlum Steel Corporation and the Town of Wallingford (Pierce Generating Plant). Said point is further marked by a concrete monument.

Thence at an azimuth of 308°13'25", 332.00 feet to the TRUE POINT OF BEGINNING
Thence at an azimuth of 195°35'10", 222.65 feet to a point;
Thence at an azimuth of 226°53'35", 59.83 feet to a point;
Thence at an azimuth of 316°53'35", 20.60 feet to a point;
Thence at an azimuth of 226°53'35", 22.50 feet to a point;
Thence at an azimuth of 316°53'35", 55.00 feet to a point;
Thence at an azimuth of 226°53'35", 105.00 feet to a point;
Thence at an azimuth of 136°53'35", 9.00 feet to a point:
Thence at an azimuth of 226°53'35", 46.20 feet to a point;
Thence at an azimuth of 136°25'15", 189.40 feet to a point;
Thence at an azimuth of 226°34'25", 230.60 feet to a point;
Thence at an azimuth of 137°26'15", 31.40 feet to a point;
Thence at an azimuth of 177°24'45", 55.20 feet to a point;
Thence at an azimuth of 225°36'55", 80.75 feet to a point:
Thence at an azimuth of 021°2'00", 58.71 feet to a point:
Thence at an azimuth of 315°27'50", 51.85 feet to a point:
Thence at an azimuth of 46°22'45", 25.80 feet to a point;
Thence at an azimuth of 316°22'45", 56.80 feet to a point;
Thence at an azimuth of 46°22'45", 1.50 feet to a point;
Thence at an azimuth of 316°22'20", 182.29 feet to a point;
Thence at an azimuth of 226°23'45", 237.15 feet to a point;
Thence at an azimuth of 136°21'50", 167.50 feet to a point;
Thence at an azimuth of 181°35'25", 60.30 feet to a point;
Thence at an azimuth of 226°36'50", 89.95 feet to a point;
Thence along a counterclockwise curve, radius 188.60 feet, interior angle 25° 32' 15", arc length 84.06 feet to a point;
Thence at an azimuth of 320°52'35", 29.65 feet to a point;
Thence at an azimuth of 00°24' 20", 64.75 feet to a point;
Thence at an azimuth of 269°53'55", 103.15 feet to a point;
Thence at an azimuth of 329°47'30", 84.55 feet to a point;
Thence at an azimuth of 19°58'55", 66.30 feet to a point;
Thence at an azimuth of 33°43'00", 92.00 feet to a point;
Thence at an azimuth of 27°17'15", 56.38 feet to a point:
Thence at an azimuth of 18°35'15", 66.23 feet to a point;
Thence at an azimuth of 12°53'55", 176.00 feet to a point;
Thence at an azimuth of 40°17'25", 56.70 feet to a point;
Thence at an azimuth of 67°25'00", 136.50 feet to a point;
Thence at an azimuth of 59°03'15", 96.00 feet to a point;
Thence at an azimuth of 338°44'40", 45.70 feet to a point;
Thence at an azimuth of 69°53'03", 344.34 feet to a point;
Thence along a clockwise curve, radius 155.00 feet interior angle 52°22'35", arc length 141.69 feet to a point;
Thence at an azimuth of 128°13'25", 53.43 feet to the TRUE POINT OF BEGINNING

Said leased area contains 369,535 +/- square feet (8.48 +/- acres) and is more particularly depicted on a map entitled "Property Survey, Area To Be Leased By Wallingford Energy LLC, #179 East Street, Wallingford, Connecticut, Date: September 13, 2000, Scale 1"= 60', Project no. 98-160, Sheet 1 of 1." Said map prepared by Juliano Associates and certified to Class A-2 accuracy by David W. Juliano L.S. #8033

Legend of Symbols & Abbreviations

MONUMENT FOUND
MONUMENT SET
P.K. NAIL FOUND
P.K. NAIL SET
FND X MARK
SET X MARK
R.R. SPIKE FOUND
R.R. SPIKE SET
BENCHMARK
CONC. R/W MARKER
(R) RECORD DATA
(M) MEASURED DATA
(C) CALCULATED DATA
R/W RIGHT OF WAY
BSL BACK SET LINE
RCP REINFORCED CONC PIPE
CMP CORRUGATED METAL PIPE
PVC PLASTIC PIPE
MTL METAL
AGL ABOVE GROUND LEVEL
F.P. FOOTPRINT
L/S LANDSCAPING
TREE

POWERPOLE
GUY WIRE
LIGHT POLE
STREET LIGHT POLE
ELEC. TRANSFORMER
AIR CONDITIONER
BURIED ELECTRIC
OVERHEAD ELECTRIC
ELEC. MANHOLE
ELECTRIC METER
WATER LINE
WATER MANHOLE
WATER VALVE
WATER METER
HYDRANT
BACK FLOW PREVENTOR
GAS VALVE
GAS METER
UNDERGROUND GAS MARKER
GAS MANHOLE
GAS LINE
BOLLARD
BORE HOLE
MONITORING WELL
MAIL BOX
UNKNOWN MANHOLE
SQUARE METAL LID
FUEL TANK LID
FLAG POLE

SAN.SEWER LINE
SEWER MANHOLE
CLEAN OUT
STORM DRAIN LINE
STORM DRAIN MANHOLE
STORM INLET
CURB INLET
PAY PHONE
TELEPHONE BOX
TELEPHONE MANHOLE
TELEPHONE POLE
TELEPHONE LINE
OVERHEAD TELEPHONE
UNDERGROUND TELEPHONE MARKER
CABLE TELEVISION
OVERHEAD CABLE
CABLE BOX
UNDERGROUND CABLE MARKER
TRAFFIC POLES
TRAFFIC SIGNAL
TRAFFIC MANHOLE
TRAFFIC SIGNAL BOX
STOP SIGN
SIGN

Site Data

ZONING AND RESTRICTIONS SHOWN HEREON WERE OBTAINED BY A GENERAL REQUEST AT THE PUBLIC COUNTER OF THE LOCAL ZONING AUTHORITY. NO REPRESENTATION IS MADE FOR THE ACCURACY OR COMPLETENESS OF SAID THIRD PARTY INFORMATION. THIS FIRM IS NOT AN EXPERT IN THE INTERPRETATION OF COMPLEX ZONING ORDINANCES, COMPLIANCE IS BEYOND THE SCOPE OF THIS SURVEY. ANY USER OF SAID INFORMATION IS URGED TO CONTACT THE LOCAL AGENCY DIRECTLY.

1. ZONING - I-40 INDUSTRIAL DISTRICT

SETBACKS -
-FRONT = 50 FT.
-SIDE = 25 FT.
-REAR = 50 FT.
HEIGHT RESTRICTIONS- NOT TO EXCEED 30 FT.
PARKING REQUIRED = N/A
PARKING PROVIDED -
-REGULAR = 9 SPACES
-HANDICAP = 1 SPACES
TOTAL SPACES PROVIDED = 10
2. PROPERTY IS KNOWN AS PARCEL 65-003-005 IN THE TOWN OF WALLINGFORD NEW HAVEN COUNTY, CONNECTICUT
3. LEASE AREA = 358,187 S.F. OR 8.2228 AC.
4. BASED ON VISUAL OBSERVATION, THE SUBJECT PROPERTY IS SERVICED BY ALL THE NECESSARY UTILITIES REQUIRED TO MAINTAIN NORMAL OPERATION. THE UTILITY LOCATIONS SHOWN HEREON WERE DETERMINED BY OBSERVED ABOVE GROUND EVIDENCE ONLY. THE SURVEYOR WAS NOT PROVIDED WITH UNDERGROUND PLANS OR ABOVE GROUND MARKINGS TO DETERMINE ANY SUBSURFACE LOCATION. CONTACT LOCAL UTILITY COMPANY PRIOR TO CONSTRUCTION
5. THIS SURVEY CONFORMS TO A CLASS A-2 SURVEY AND HAS BEEN PREPARED IN ACCORDANCE WITH THE "RECOMMENDED STANDARDS FOR SURVEYS AND MAPS IN THE STATE OF CONNECTICUT" AS ADOPTED BY THE CONNECTICUT ASSOCIATION OF LAND SURVEYORS, INC., ON SEPTEMBER 24, 1992.
6. THE TYPE OF SURVEY PERFORMED IS A PROPERTY SURVEY.
7. BOUNDARY DETERMINATION IS BASED UPON A DEPENDENT RESURVEY AND THIS SURVEY IS SUBJECT TO SUCH FACTS AS AN INDEPENDENT RESURVEY MAY DISCLOSE.
8. IN RESPONSE TO TABLE A ITEMS 16, 17, AND 18, THERE WAS NO OBSERVABLE EVIDENCE OF EARTH MOVING WORK, BUILDING CONSTRUCTION OR ADDITIONS, NO CHANGES IN RIGHT OF WAY LINES, RECENT STREET, OR SIDEWALK CONSTRUCTION OR REPAIRS AND NO OBSERVABLE EVIDENCE OF SITE USE AS A SOLID WASTE DUMP, SUMP, OR SANITARY LANDFILL.

Encroachment Statement

NONE OBSERVED

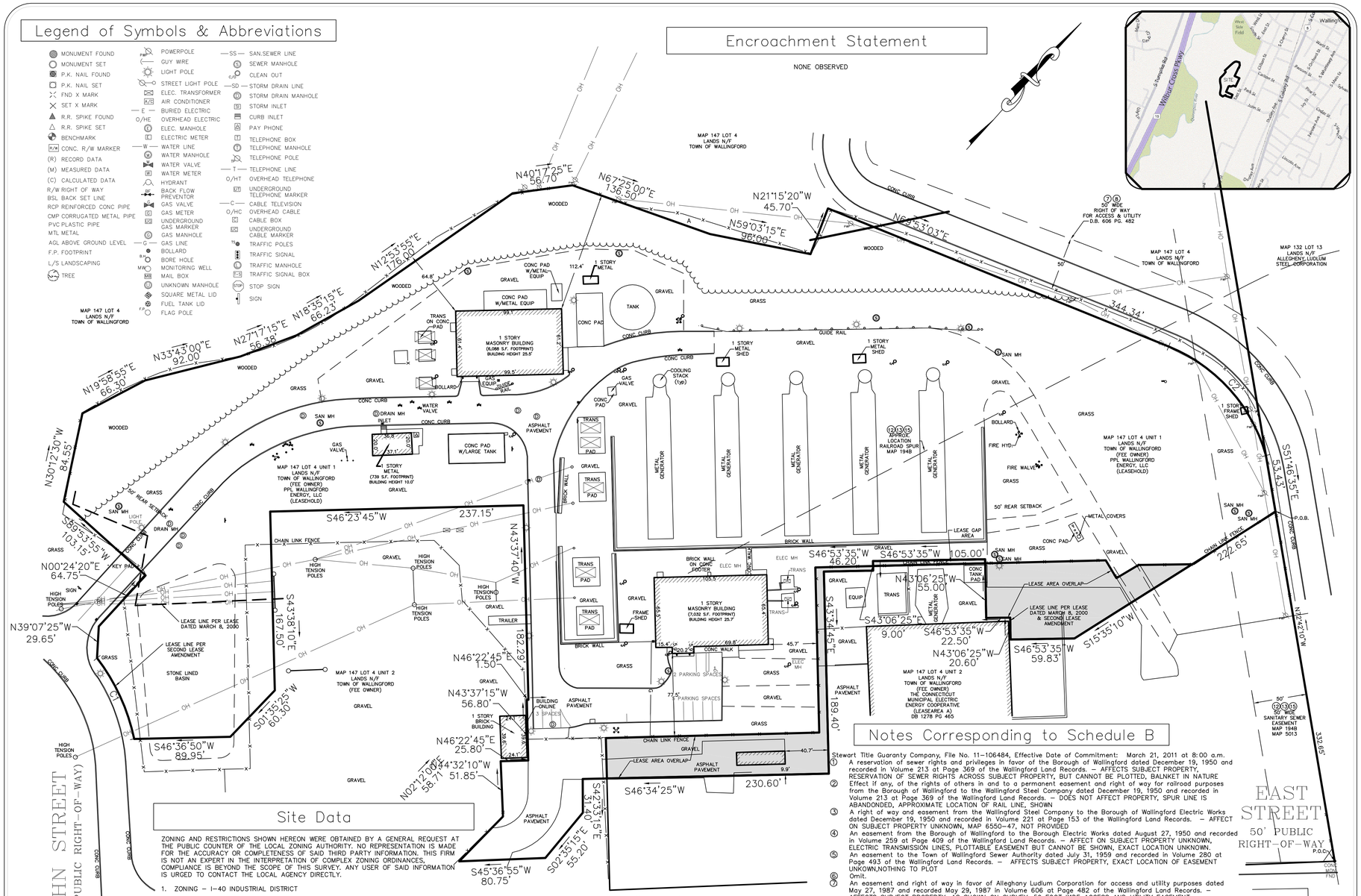

CURVE TABLE						
CURVE NO.	RADIUS	LENGTH	TANGENT	CH. AZM.	CH. DIST.	DELTA
C1	188.60'	84.05'	42.74'	293°10'08"	83.36'	25°32'03"
C2	155.00'	141.69'	76.23'	276°04'20"	136.81'	52°22'35"

FLOOD NOTE: By graphic plotting only, this property is in Zone(s) X of the Flood Insurance Rate Map,Community Panel No. 09009C0304H ,which bears an effective date of 12/17/2010 and is not in a Special Flood Hazard Area.

Notes Corresponding to Schedule B

Stewart Title Guaranty Company, File No. 11-106484, Effective Date of Commitment: March 21, 2011 at 8:00 a.m.

1. A reservation of sewer rights and privileges in favor of the Borough of Wallingford dated December 19, 1950 and recorded in Volume 213 at Page 369 of the Wallingford Land Records. - AFFECTS SUBJECT PROPERTY, RESERVATION OF SEWER RIGHTS ACROSS SUBJECT PROPERTY, BUT CANNOT BE PLOTTED, BALNKET IN NATURE
2. Effect if any, of the rights of others in and to a permanent easement and right of way for railroad purposes from the Borough of Wallingford to the Wallingford Steel Company dated December 19, 1950 and recorded in Volume 213 at Page 369 of the Wallingford Land Records. - DOES NOT AFFECT PROPERTY, SPUR LINE IS ABANDONDED, APPROXIMATE LOCATION OF RAIL LINE, SHOWN
3. A right of way and easement from the Wallingford Steel Company to the Borough of Wallingford Electric Works dated December 19, 1950 and recorded in Volume 221 at Page 153 of the Wallingford Land Records. - AFFECT ON SUBJECT PROPERTY UNKNOWN, MAP 6550-47, NOT PROVIDED
4. An easement from the Borough of Wallingford to the Borough Electric Works dated August 27, 1950 and recorded in Volume 259 at Page 409 of the Wallingford Land Records. - AFFECT ON SUBJECT PROPERTY UNKNOWN, ELECTRIC TRANSMISSION LINES, PLOTTABLE EASEMENT BUT CANNOT BE SHOWN, EXACT LOCATION UNKNOWN.
5. An easement to the Town of Wallingford Sewer Authority dated July 31, 1959 and recorded in Volume 280 at Page 493 of the Wallingford Land Records. - AFFECTS SUBJECT PROPERTY, EXACT LOCATION OF EASEMENT UNKOWN,NOTHING TO PLOT
6. Omit.
7. An easement and right of way in favor of Alleghany Ludlum Corporation for access and utility purposes dated May 27, 1987 and recorded May 29, 1987 in Volume 606 at Page 482 of the Wallingford Land Records. - AFFECTS SUBJECT PROPERTY, AS SHOWN ON SURVEY, 50 FOOT WIDE ACCESS AND UTILITY EASEMENT.
8. An easement and right of way in favor of the Town of Wallingford for access and utility purposes dated May 27, 1987 and recorded May 29, 1987 in Volume 606 at Page 482 of the Wallingford Land Records. - AFFECTS SUBJECT PROPERTY, AS SHOWN ON SURVEY, 50 FOOT WIDE ACCESS AND UTILITY EASEMENT.
9. Omit.
10. Omit.
11. Grant of Easement as set forth in instrument dated January 25, 1952 and recorded in Volume 225 at Page 584 of the Wallingford Land Records, and as shown on Map # 529, as may affect. - AFFECTS SUBJECT PROPERTY, BUT CANNOT BE PLOTTED, BLANKET IN NATURE.
12. Right of Way and Easement as set forth in instrument dated December 19, 1950 and recorded in Volume 221 at Page 143 of the Wallingford Land Records, and as shown on Map # 194B. - AFFECT ON SUBJECT PROPERTY, AS SHOWN ON SURVEY, 50 FOOT WIDE SANITARY SEWER EASEMENT, APPROXIMATE LOCATION OF RAIL ROAD SPUR SHOWN.
13. Right of Way and Easement as set forth in instrument dated January 15, 1951 and recorded in Volume 221 at Page 263 of the Wallingford Land Records, and as shown on Map # 194B. - AFFECT ON SUBJECT PROPERTY, AS SHOWN ON SURVEY, 50 FOOT WIDE SANITARY SEWER EASEMENT, APPROXIMATE LOCATION OF RAIL ROAD SPUR SHOWN.
14. Easement, Privilege and Right of Way and Reservation as set forth in instrument dated July 30, 1957 and recorded in Volume 259 at Page 409 of the Wallingford Land Records, as may affect. - AFFECT ON SUBJECT PROPERTY UNKNOWN, ELECTRIC TRANSMISSION LINES, PLOTTABLE EASEMENT BUT CANNOT BE SHOWN, EXACT LOCATION UNKNOWN.
15. Notes, Building Lines, Rights of Way, Easements and Conditions as shown on Maps 99, 194B, 266, 529, 603, 4645, 4696 and 5013. - AFFECTS SUBJECT PROEPRTY, 50 FOOT WIDE SANITARY SEWER EASEMENT, APPROXIMATE LOCATION OF RAIL ROAD SPUR SHOWN
16. Rights as may exist under that certain unrecorded Lease Agreement by and between the Town of Wallingford and Wallingford Energy LLC dated March 8, 2000; as the same was amended by that certain First Lease Amendment dated October 25, 2000; as further amended by that certain Second Lease Amendment undated. Note: Refer to Amendment to Agreement creating the Connectlcut Municipal Electric Energy Cooperative dated April 7, 1987 and recorded in Volume 617 at Page 631 of the Wallingford Land Records. - AFFECTS SUBJECT PROPERTY, BUT CANNOT BE PLOTTED, BLANKET IN NATURE.

Exhibit 3 – Overall Site Plan

BULK REQUIREMENTS

APPLICANT:	WALLINGFORD ENERGY II, LLC 400 CHESTERFIELD CENTER, SUITE 110, ST. LOUIS, MO 63017	
OWNER:	TOWN OF WALLINGFORD (SUBLESSE: WALLINGFORD ENERGY II, LLC)	
ZONE:	I-40 ZONE	
USE:	INDUSTRIAL	
	REQUIRED	PROVIDED
MINIMUM LOT AREA	40,000 SQ. FT.	1,172,435 SQ.FT. ± 26.9± ACRES
MINIMUM FRONTAGE	150 FT.	1,270 FT. ±
MINIMUM FRONT YARD	50 FT.	110 FT. ±
MINIMUM SIDE YARD	25 FT.	75 FT. ±
MINIMUM REAR YARD	50 FT.	424 FT. ±
MAXIMUM COVERAGE	35%	3% ±
MAXIMUM BUILDING HEIGHT	30 FT.	

GENERAL NOTES

1. TOPOGRAPHICAL, PROPERTY LINES, EXISTING SITE FEATURES, AND UTILITY INFORMATION TAKEN FROM MAPS PROVIDED BY WALLINGFORD ENERGY II. LLC AND ON FILE AT THE WALLINGFORD TOWN HALL. INFORMATION ON EXISTING UTILITIES HAS BEEN COMPILED FROM AVAILABLE INFORMATION INCLUDING UTILITY COMPANY AND MUNICIPAL RECORD MAPS AND FIELD SURVEY AND IS NOT GUARANTEED CORRECT OR COMPLETE. UTILITIES ARE SHOWN TO ALERT THE CONTRACTOR TO THEIR PRESENCE. THE CONTRACTOR AND/OR RESPONSIBLE PARTY IS SOLELY RESPONSIBLE FOR DETERMINING ACTUAL LOCATIONS AND ELEVATIONS OF ALL UTILITIES INCLUDING SERVICES. PRIOR TO CONSTRUCTION, CONTACT "CALL BEFORE YOU DIG" AT 800-922-4455 AND VERIFY ALL UNDERGROUND AND OVERHEAD UTILITY LOCATIONS.
2. IT IS THE RESPONSIBILITY OF THE CONTRACTOR TO VERIFY ALL ELEVATIONS, PROPERTY LINES, LOCATION OF UTILITIES AND SITE CONDITIONS IN THE FIELD. IF AN UNFORESEEN INTERFERENCE EXISTS BETWEEN AN EXISTING AND A PROPOSED STRUCTURE, THE CONTRACTOR SHALL NOTIFY THE DESIGN ENGINEER SO THAT THE APPROPRIATE REVISIONS CAN BE MADE.
3. IT IS THE DEVELOPER'S RESPONSIBILITY TO OBTAIN ALL NECESSARY PERMITS AND/OR EASEMENTS FROM STATE AND LOCAL AUTHORITIES AND ANY CONSTRUCTION RIGHTS AND/OR SLOPE RIGHTS AS MAY BE REQUIRED FROM THE PROPERTY OWNERS.
4. THE CONTRACTOR IS TO CONTACT "CALL BEFORE YOU DIG" TO HAVE ALL UTILITY LINES CLEARLY MARKED PRIOR TO ANY EXCAVATION.
5. IT IS THE CONTRACTOR'S RESPONSIBILITY TO ASSURE THAT ALL PIPING IS PROPERLY BEDDED AND STABILIZED IN AREAS OF HIGH GROUND WATER AND/OR UNSTABLE SOIL CONDITIONS.
6. IT IS THE RESPONSIBILITY OF EACH BIDDER IN EVALUATING THESE PLANS TO MAKE EXAMINATIONS IN THE FIELD BY VARIOUS METHODS AND OBTAIN NECESSARY INFORMATION FROM AVAILABLE RECORDS, UTILITY CORPORATIONS, AND INDIVIDUALS AS TO THE LOCATION OF ALL SUBSURFACE STRUCTURES.
7. THE CONTRACTOR IS TO USE CAUTION WHEN WORKING NEAR OR UNDER OVERHEAD AND UNDERGROUND UTILITIES. THE CONTRACTOR IS TO NOTIFY THE UTILITY COMPANIES OF HIS INTENT PRIOR TO THE COMMENCEMENT OF ANY WORK.
8. ALL CONSTRUCTION SHALL BE IN ACCORDANCE WITH THE TOWN OF WALLINGFORD STANDARDS AND/OR CONNECTICUT DEPARTMENT OF TRANSPORTATION (CT-DOT) FORM 816, LATEST EDITION.
9. ANY DRAINAGE STRUCTURES, DITCHES, ASPHALT, CURBS OR GRASSED AREAS DISTURBED DURING CONSTRUCTION SHALL BE RESTORED TO THE ORIGINAL CONDITION.
10. ALL AREAS OF DISTURBED EARTH SHALL BE STABILIZED BY MULCHING OR OTHER MEANS. SEEDING OF GRASSED AREAS SHALL BE INITIATED AS SOON AS PRACTICAL AS AN EROSION AND SILTATION CONTROL MEASURE.
11. ALL STORM SEWER LINES ARE TO BE INSTALLED USING INVERT ELEVATIONS, PIPE SLOPES SHOWN ARE APPROXIMATE AND ARE FOR REFERENCE ONLY.
12. APPLICABLE STORM SEWER CONSTRUCTION SHALL CONFORM TO THE TOWN OF WALLINGFORD STORM SEWER SPECIFICATIONS.
13. STORM DRAINAGE PIPING SHALL BE AS FOLLOWS:
    CPP-ADS N-12 OR HANCOR CORRUGATED POLYETHYLENE PIPE WITH SMOOTH INTERIOR HIQ-HANCOR HI-Q CORRUGATED POLYETHYLENE PIPE WITH SMOOTH INTERIOR RCP-REINFORCED CONCRETE PIPE
14. ALL ROOF DRAINS ARE TO BE CONNECTED TO THE STORM DRAINAGE SYSTEM WHERE SHOWN.
15. THE REQUIREMENTS FOR ADDITIONAL UNDERDRAINAGE, DRAINAGE, CATCH BASINS, RETAINING AND/OR HEADWALLS NOT SHOWN ON THESE PLANS IS TO BE FIELD DETERMINED AFTER DRIVEWAYS AND PARKING AREAS HAVE BEEN CUT TO SUBGRADE.
16. WATER LINE CROSSING ALL OTHER UTILITIES SHALL MAINTAIN A 12 INCH VERTICAL SEPARATION DISTANCE. NO WATER LINE IS TO BE INSTALLED WITHIN 10 FEET OF THE SANITARY SEWER SYSTEM.
17. RETAINING WALLS OVER 3' IN HEIGHT ARE TO BE DESIGNED AND CONSTRUCTED UNDER THE SUPERVISION OF A STATE OF CONNECTICUT LICENSED PROFESSIONAL ENGINEER.
18. RETAINING WALLS THAT REQUIRE AN ENGINEERED DESIGN SHALL BE SUBMITTED TO THE TOWN OF WALLINGFORD BUILDING DEPARTMENT ALONG WITH CALCULATIONS FOR REVIEW AND APPROVAL BEFORE ANY CONSTRUCTION BEGINS.
19. PROPOSED WATER SERVICES ARE TO MEET THE REQUIREMENTS OF THE STATE PLUMBING CODES AND WALLINGFORD WATER DEPARTMENT.
20. THE ON-SITE DRAINAGE SYSTEM WILL REMAIN PRIVATE. THE PROPERTY OWNER IS TO PROVIDE REGULAR MAINTENANCE OF THE SYSTEM TO ALLOW IT TO CONTINUALLY FUNCTION AS INTENDED.
21. ANY WORK AFFECTING EXISTING TREES WITHIN A CITY ROAD RIGHT-OF-WAY OR ON CITY PROPERTY IS TO BE APPROVED BY THE TOWN OF WALLINGFORD.
22. RETAINING WALLS ARE TO HAVE PROTECTIVE FENCING WHERE WARRANTED.
23. COMPACTION OF FILL IS TO BE PROVIDED IN ACCORDANCE WITH CT-DOT FORM 816.
24. UTILITY SERVICES ARE TO BE ABANDONED IN ACCORDANCE WITH THE UTILITY OWNERS REQUIREMENTS PRIOR TO SITE WORK.
25. RELOCATION OF UTILITY COMPANY FACILITIES SUCH AS POLES, SHALL BE DONE IN ACCORDANCE WITH THE REQUIREMENTS OF THE FACILITY OWNERS.
26. A PORTION OF THE PARCEL IS LOCATED WITH A SPECIAL FLOOD HAZARD AREA ZONE AE, PER "FIRM FLOOD INSURANCE RATE MAP, NEW HAVEN COUNTY, CONNECTICUT (ALL JURISDICTIONS) PANEL 304 OF 635, MAP NUMBER 09009C0304H; EFFECTIVE DATE DECEMBER 17, 2010," FROM FEDERAL EMERGENCY MANAGEMENT AGENCY.

REFERENCE MAPS:

1. WALLINGFORD EXPANSION PROJECT BY LS POWER DEVELOPMENT, LLC; SITE PLAN, G1; REVISED 10-27-2014
2. UTILITIES AT ALFRED PIERCE ELECTRIC GENERATING PLANT BY TOWN OF WALLINGFORD, CONNECTICUT DEPARTMENT OF PUBLIC UTILITIES SEWER DIVISION, DATED 3-1-99
3. ALTA/ACSM LAND TITLE SURVEY; SURVEYOR CERTIFICATION BY AMERICAN NATIONAL DATED JUNE 1, 2011
4. SANITARY SEWER AND STORM DRAINAGE PLAN (DRAWING NO. C12) PREPARED BY BARTON MALOW COMPANY, OBTAINED FROM THE TOWN OF WALLINGFORD ENGINEERING DEPARTMENT.

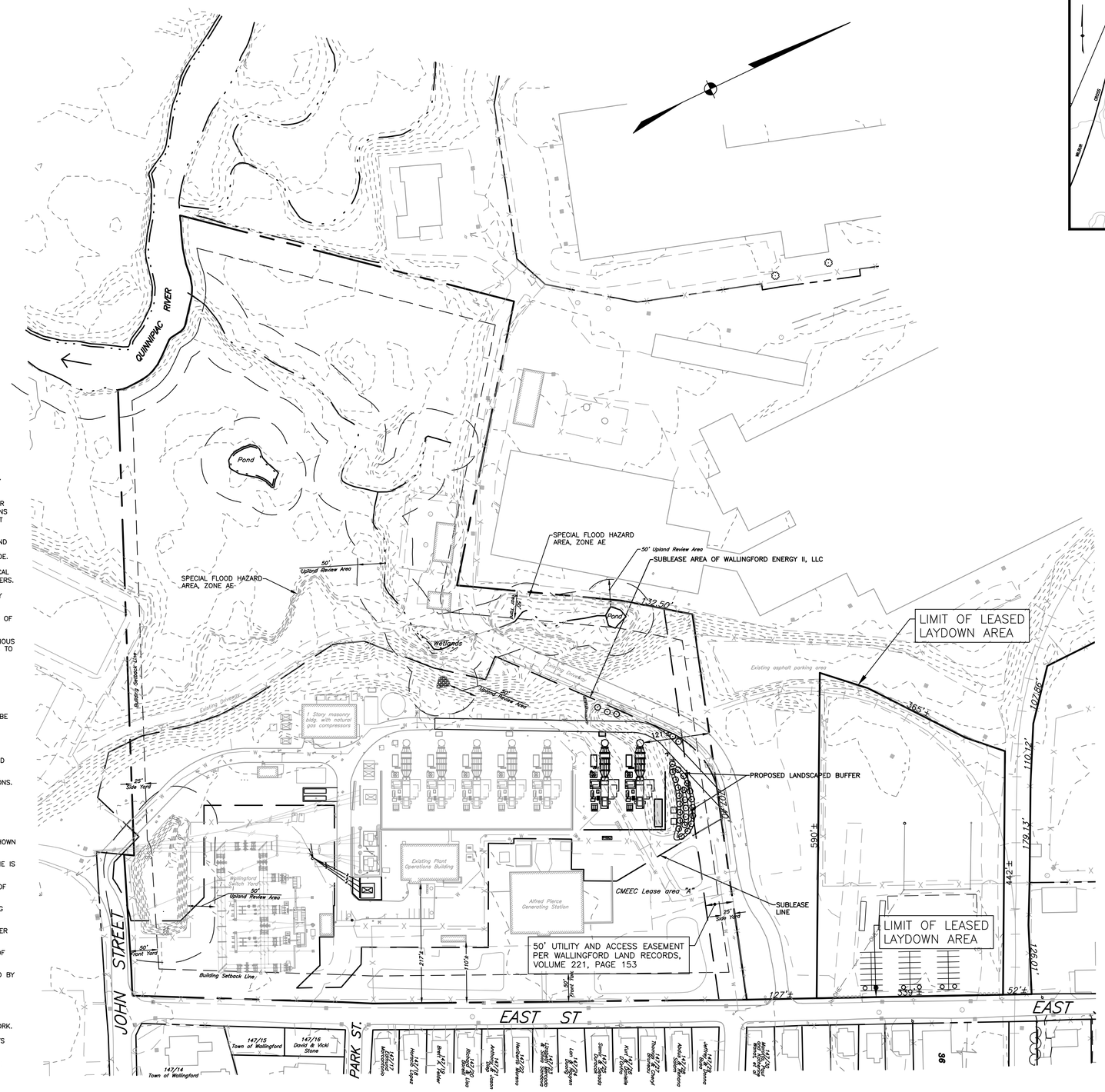

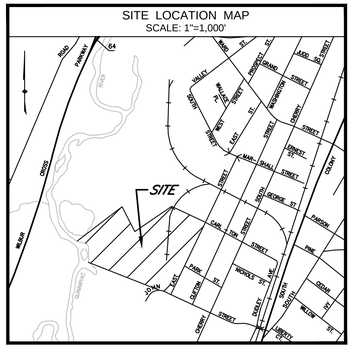

0 100 200 300

IMPORTANT NOTE:

ALL ABOVE AND BELOW GROUND IMPROVEMENTS ARE NOT SHOWN OR DEPICTED HEREON. ADDITIONAL UNDERGROUND UTILITIES MAY EXIST. PRIOR TO ANY EXCAVATION OR CONSTRUCTION, CONTACT: "CALL BEFORE YOU DIG" 1-800-922-4455

GODFREY/HOFFMAN ASSOCIATES, LLC
PROFESSIONAL LAND SURVEYORS & CIVIL ENGINEERS
26 BROADWAY NORTH HAVEN, CT 06473
TEL: 203.239.4217 FAX: 203.234.2088 WWW.GODFREYHOFFMAN.COM

STATE OF CONNECTICUT JAMES R. GODFREY No. 9687 PROFESSIONAL ENGINEER

NOT VALID WITHOUT LIVE SIGNATURE AND SEAL

ALL WORK, LABOR, AND MATERIALS TO BE IN STRICT ACCORDANCE WITH ALL APPLICABLE CODES AND LAW. IN THE EVENT OF ERRORS AND/OR OMISSIONS HEREIN, THE ARCHITECT/ENGINEER SHALL BE NOTIFIED IMMEDIATELY. THE ARCHITECT/ENGINEER NOT TO BE HELD LIABLE FOR ERRORS AND/OR OMISSIONS IN THE PLANS WHICH ARE NOT THE RESULT OF THE ARCHITECT/ENGINEER'S ORIGINAL DESIGN OR IN THE EXPRESSION OF PROFESSIONAL OPINION BY THE ARCHITECT/ENGINEER. ALL DIMENSIONS TO BE VERIFIED IN FIELD BY CONTRACTOR. ARCHITECT/ENGINEER NOT TO BE HELD LIABLE FOR DIMENSIONS NOT VERIFIED IN FIELD. USE OF SCALE DIMENSIONS NOT TO BE RELIED UPON. USE WRITTEN DIMENSIONS ONLY. ALL DRAWINGS, SPECIFICATIONS, AND INFORMATION PROVIDED BY THE ARCHITECT/ENGINEER ARE TO BE USED FOR THIS PROJECT ONLY. THE INFORMATION CONTAINED HEREIN IS THE PROPRIETARY AND CONFIDENTIAL PROPERTY OF GODFREY-HOFFMAN ASSOCIATES, LLC. ANY REPRODUCTION OR DISTRIBUTION OF THE DOCUMENTS, IN WHOLE OR IN PART, WITHOUT WRITTEN PERMISSION IS PROHIBITED. ALL DRAWINGS, SPECIFICATIONS, AND INFORMATION PROVIDED BY THE ARCHITECT/ENGINEER ARE TO BE USED FOR THIS PROJECT ONLY. THE SEAL AND SIGNATURE ARE VALID ONLY IF THEY BEAR THE LIVE SIGNATURE AND SEAL OF THE ARCHITECT/ENGINEER. © COPYRIGHT 2015, ALL RIGHTS RESERVED

REVISION SCHEDULE

NO.	DATE	DESCRIPTION
1	08.22.2016	LEASE LAYDOWN AREA ADDED
2	09.02.2016	PROPOSED BUILDINGS REMOVED

PROJECT:

FACILITY EXPANSION PROJECT

115 JOHN STREET
WALLINGFORD, CONNECTICUT

PREPARED FOR:

WALLINGFORD ENERGY II, LLC

400 CHESTERFIELD CENTER, SUITE 110
ST. LOUIS, MO 63017

OVERALL SITE PLAN

DRAWN BY:	JT
CHECKED BY:	JR
SCALE:	1"=100'
PROJECT:	15-011
DATE:	6/2/2015

C-1.0

Exhibit 4 – Site Plan

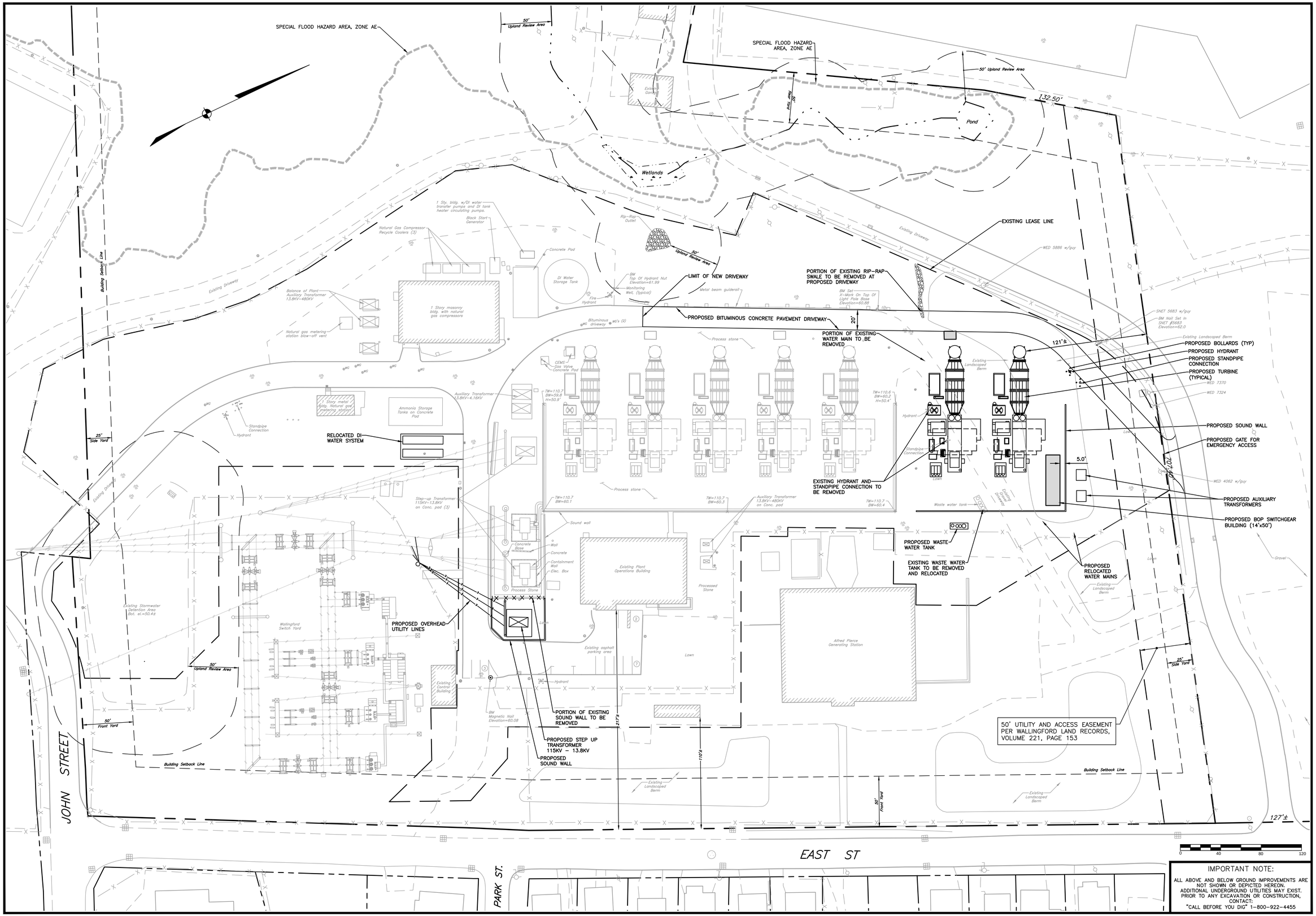

IMPORTANT NOTE:

ALL ABOVE AND BELOW GROUND IMPROVEMENTS ARE NOT SHOWN OR DEPICTED HEREON. ADDITIONAL UNDERGROUND UTILITIES MAY EXIST. PRIOR TO ANY EXCAVATION OR CONSTRUCTION, CONTACT:

"CALL BEFORE YOU DIG" 1–800–922–4455

GODFREY/HOFFMAN ASSOCIATES, LLC
PROFESSIONAL LAND SURVEYORS & CIVIL ENGINEERS
26 BROADWAY NORTH HAVEN, CT 06473
TEL: 203.239.4217 FAX: 203.234.2088 WWW.GODFREYHOFFMAN.COM

SNETT 5683 CONNECTICUT LICENSED PROFESSIONAL ENGINEER No. 27 JAMES VERNON TRUMBULL

IT IS VALID WITHOUT LIVE SIGNATURE AND SEAL

ALL WORK, LABOR, AND MATERIALS TO BE IN STRICT ACCORDANCE WITH ALL APPLICABLE CODES AND LAW IN THIS JURISDICTION. THE ENGINEER IS NOT RESPONSIBLE IN THE EVENT OF ERRORS AND/OR OMISSIONS HEREIN.

THIS DOCUMENT IS INTENDED ONLY FOR THE PURPOSE TO BE GIVEN AN OPINION OF PROFESSIONAL OPINION BY THE LAND SURVEYOR, ARCHITECT OR ENGINEER NAMED HEREIN, TO THE BEST OF HIS/HER KNOWLEDGE, INFORMATION, AND BELIEF AS SUCH IT PERTAINS TO THE PROPERTY SHOWN HEREON.

THE INFORMATION CONTAINED HEREIN IS THE PROPRIETARY AND CONFIDENTIAL PROPERTY OF GODFREY-HOFFMAN ASSOCIATES, LLC. ANY REPRODUCTION IN WHOLE OR IN PART IS REQUIRED TO HAVE WRITTEN PERMISSION IF GODFREY-HOFFMAN ASSOCIATES, LLC. THE DRAWINGS, SPECIFICATIONS, AND OTHER DOCUMENTS ARE VALID ONLY IF THEY BEAR THE LIVE SIGNATURE AND SEAL OF THE REGISTERED PROFESSIONAL ENGINEER.

© COPYRIGHT 2015, ALL RIGHTS RESERVED

REVISION SCHEDULE

NO.	DATE	DESCRIPTION
1	08.22.2016	SWITCHGEAR BLDG. LOCATION
2	09.02.2016	PROPOSED BUILDINGS REMOVED

PROJECT:

FACILITY EXPANSION PROJECT

115 JOHN STREET
WALLINGFORD, CONNECTICUT

PREPARED FOR:

WALLINGFORD ENERGY II, LLC

400 CHESTERFIELD CENTER, SUITE 110
ST. LOUIS, MO 63017

SITE PLAN

DRAWN BY:	JT
CHECKED BY:	JR
SCALE:	1"=40'
PROJECT:	15-011
DATE:	6/2/2015

C-1.1

Exhibit 5 – Grading & Utility Plan

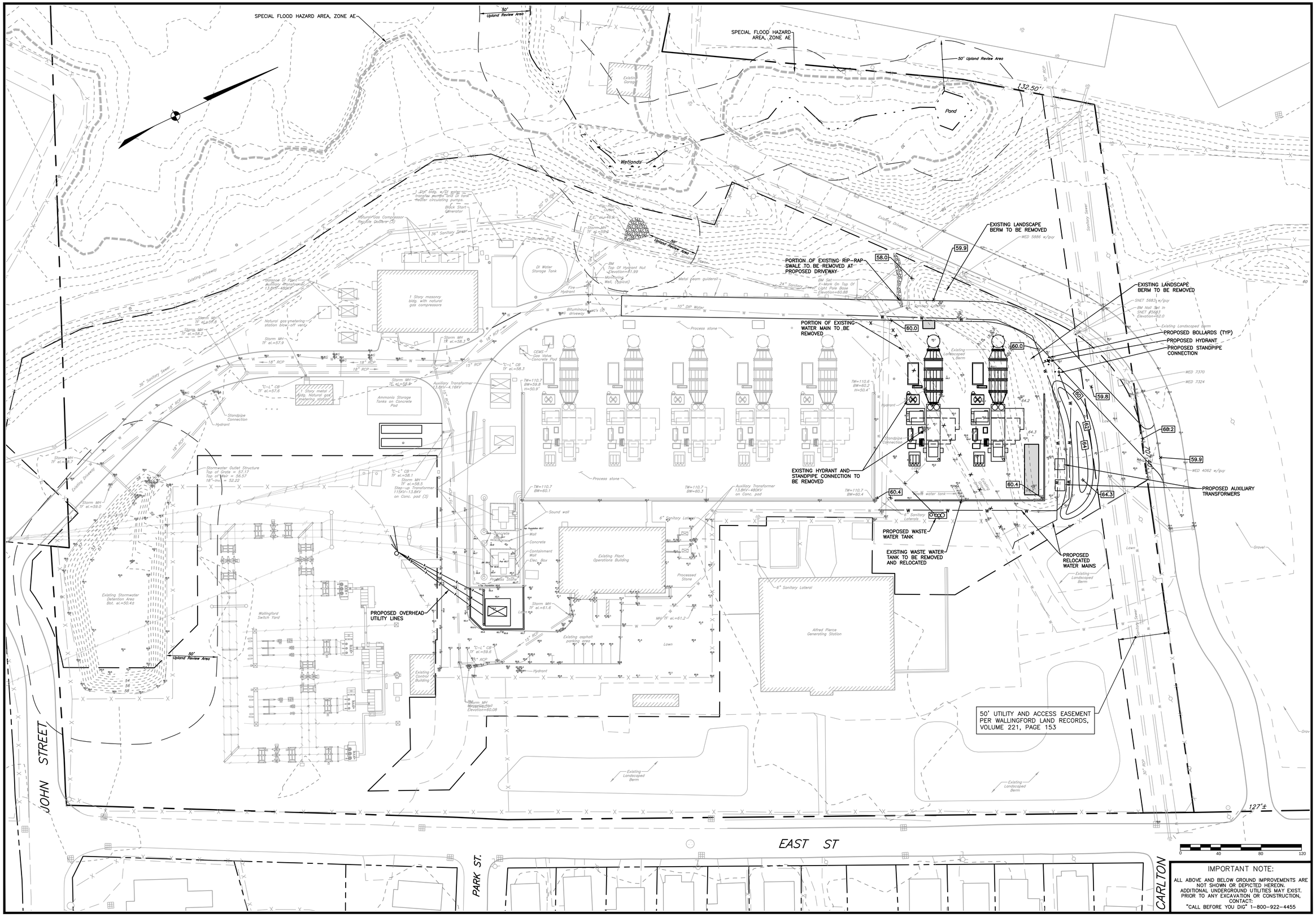

IMPORTANT NOTE:

ALL ABOVE AND BELOW GROUND IMPROVEMENTS ARE NOT SHOWN OR DEPICTED HEREON. ADDITIONAL UNDERGROUND UTILITIES MAY EXIST. PRIOR TO ANY EXCAVATION OR CONSTRUCTION, CONTACT: "CALL BEFORE YOU DIG" 1-800-922-4455

GODFREY/HOFFMAN ASSOCIATES, LLC
PROFESSIONAL LAND SURVEYORS & CIVIL ENGINEERS
26 BROADWAY NORTH HAVEN, CT 06473
TEL: 203.239.4217 FAX: 203.234.2088 WWW.GODFREYHOFFMAN.COM

STATE OF CONNECTICUT PROFESSIONAL ENGINEER No. 18987

IT IS VALID WITHOUT LIVE SIGNATURE AND SEAL

ALL WORK, LABOR, AND MATERIALS TO BE IN STRICT ACCORDANCE WITH ALL APPLICABLE CODES AND LAWS. NOTHING IN THESE PLANS IS TO BE INTERPRETED AS AN EXPRESSION OF PROFESSIONAL OPINION BY THE LAND SURVEYOR OR PROFESSIONAL ENGINEER WHERE THERE IS NO EVIDENCE OF PROFESSIONAL OPINION BY THE LAND SURVEYOR OR PROFESSIONAL ENGINEER. THESE PLANS ARE BEST TRUTHS BASED ON INFORMATION AND BELIEF AS SUCH IT IS PROVIDED TO THE LAND SURVEYOR OR ENGINEER.

THE INFORMATION CONTAINED HEREIN, IS THE PROPRIETARY AND CONFIDENTIAL PROPERTY OF GODFREY-HOFFMAN ASSOCIATES, LLC. ANY REPRODUCTION OR DISTRIBUTION REQUIRES THE WRITTEN PERMISSION OF GODFREY-HOFFMAN ASSOCIATES, LLC. ALL DRAWINGS, PLANS, AND SPECIFICATIONS ARE VALID ONLY IF THEY BEAR THE LIVE SIGNATURE AND SEAL OF THE LICENSED PROFESSIONAL ENGINEER.

© COPYRIGHT 2015, ALL RIGHTS RESERVED

REVISION SCHEDULE

NO.	DATE	DESCRIPTION
1	8/22/2016	PER TOWN COMMENTS
2	09.02.2016	PROPOSED BUDLINGS REMOVED

PROJECT:

FACILITY EXPANSION PROJECT

115 JOHN STREET
WALLINGFORD, CONNECTICUT

PREPARED FOR:

WALLINGFORD ENERGY II, LLC

400 CHESTERFIELD CENTER, SUITE 110
ST. LOUIS, MO 63017

GRADING & UTILITY PLAN

DRAWN BY:	JT
CHECKED BY:	JR
SCALE:	1"=40'
PROJECT:	15-011
DATE:	6/2/2015

C-2.0

Exhibit 6 – Landscaping Plan

PLANT LIST

SYM	QTY	BOTANICAL NAME	COMMON NAME	ROOT	SIZE	COMMENTS
TREES						
PP	16	Picea pungens 'Glauca'	Colorado Blue Spruce	B&B	8' – 10' Ht.	Full, Nicely Shaped
PS	16	Pinus strobus	White Pine	B&B	8' – 10' Ht.	Full, Nicely Shaped

SOIL CHART

POST CONSTRUCTION SOIL CONDITION	TYPE OF PREPARATION
GOOD SOIL	LOOSEN EXISTING SOIL
COMPACTED SOIL	LOOSEN EXISTING SOIL, ADD COMPOSTED ORGANIC MATTER TO BRING ORGANIC CONTENT TO 5% DRY WEIGHT
CLAY CONTENT 5–35%	LOOSEN EXISTING SOIL, ADD ORGANIC MATTER TO BRING ORGANIC CONTENT TO 5% DRY WEIGHT
SANDY LOAM SOILS	ADD CLEAN COMPOSTED ORGANIC MATERIAL (20% MAX BY VOLUME) TO THE EXISTING SOIL
POOR QUALITY, HEAVY CLAY SOIL	REMOVE EXISTING SOIL, ADD LOAM TOPSOIL

PLANTING NOTES:

1. ALL PLANT MATERIAL MUST MEET AMERICAN NURSERY AND LANDSCAPE ASSOCIATION (ANLA) STANDARDS FOR NURSERY STOCK. CONTRACTOR SHALL SUBMIT REPRESENTATIVE NURSERY PHOTOS OF PROPOSED PLANTINGS FOR APPROVAL PRIOR TO PURCHASE AND INSTALLATION. ANY PLANT MATERIAL NOT MEETING STANDARDS WILL BE REMOVED AND REPLACED AT NO ADDITIONAL COST TO OWNER.

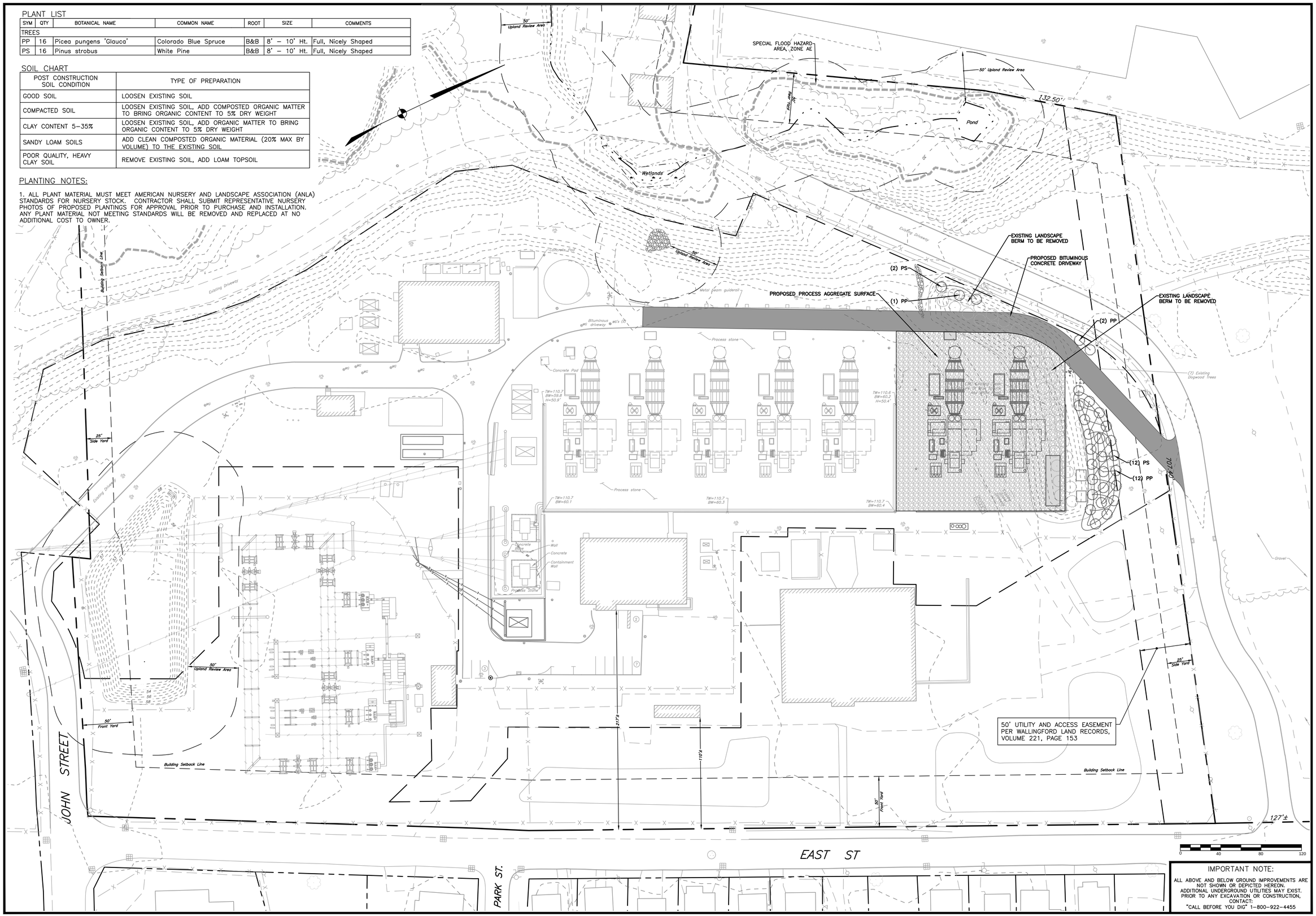

IMPORTANT NOTE:

ALL ABOVE AND BELOW GROUND IMPROVEMENTS ARE NOT SHOWN OR DEPICTED HEREON. ADDITIONAL UNDERGROUND UTILITIES MAY EXIST. PRIOR TO ANY EXCAVATION OR CONSTRUCTION, CONTACT: "CALL BEFORE YOU DIG" 1–800–922–4455

GODFREY/HOFFMAN ASSOCIATES, LLC
PROFESSIONAL LAND SURVEYORS & CIVIL ENGINEERS
26 BROADWAY NORTH HAVEN, CT 06473
TEL: 203.239.4217 FAX: 203.234.2088 WWW.GODFREYHOFFMAN.COM

STATE OF CONNECTICUT JAMES R. VERSER No. 15287 PROFESSIONAL ENGINEER

IT IS VALID WITHOUT LIVE SIGNATURE AND SEAL

ALL WORK, LABOR, AND MATERIALS TO BE IN STRICT ACCORDANCE WITH ALL APPLICABLE CODES AND LAW IN THE STATE OF CONNECTICUT. ANY DEVIATION MUST BE APPROVED IN AN EXPRESSION OF PROFESSIONAL OPINION BY THE LAND SURVEYOR OR ENGINEER OF RECORD. ALL DIMENSIONS TO BE FIELD VERIFIED. IN THE EVENT OF ERRORS AND/OR OMISSIONS HEREIN, THE INFORMATION CONTAINED HEREIN IS BEST OWNER-SUPPLIED INFORMATION, AND BELIEVED TO BE ACCURATE AS SHOWN. ALL OTHER INFORMATION IS PROFESSIONAL OPINION.

THE INFORMATION CONTAINED HEREIN IS THE PROPRIETARY AND CONFIDENTIAL PROPERTY OF GODFREY/HOFFMAN ASSOCIATES, LLC. ANY REPRODUCTION OF GODFREY/HOFFMAN ASSOCIATES, LLC. PROPRIETARY INFORMATION IS PROHIBITED WITHOUT WRITTEN PERMISSION. IF GODFREY/HOFFMAN ASSOCIATES, LLC. PROPRIETARY INFORMATION IS REQUIRED TO BE REPRODUCED, THE REPRODUCED COPIES MUST BEAR THE LEGEND, "GODFREY/HOFFMAN ASSOCIATES, LLC. PROPRIETARY INFORMATION" AND ARE VALID ONLY IF THEY BEAR THE LEGEND, SIGNATURE AND SEAL OF THE GODFREY/HOFFMAN ASSOCIATES, LLC. PROFESSIONAL.

© COPYRIGHT 2015, ALL RIGHTS RESERVED

REVISION SCHEDULE

NO.	DATE	DESCRIPTION
1	06.01.2015	PROPOSED BUILDINGS REMOVED

PROJECT:

FACILITY EXPANSION PROJECT

115 JOHN STREET
WALLINGFORD, CONNECTICUT

PREPARED FOR:

WALLINGFORD ENERGY II, LLC

400 CHESTERFIELD CENTER, SUITE 110
ST. LOUIS, MO 63017

PROPOSED LANDSCAPE PLAN

DRAWN BY:	JT
CHECKED BY:	JR
SCALE:	1"=40'
PROJECT:	15-011
DATE:	6/2/2015

C-1.2

Exhibit 7 – Soil Erosion & Sediment Control Plan

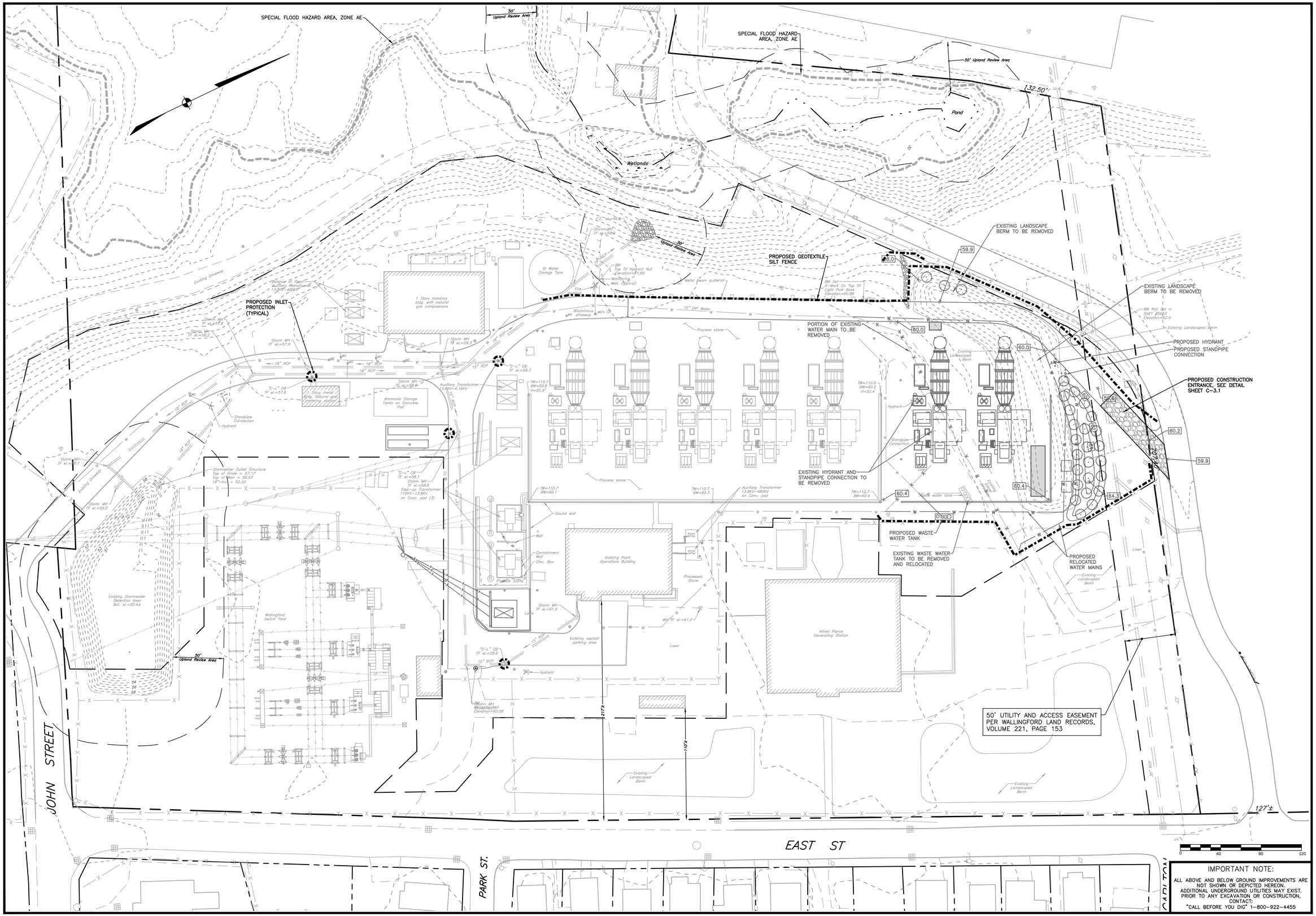

IMPORTANT NOTE:

ALL ABOVE AND BELOW GROUND IMPROVEMENTS ARE NOT SHOWN OR DEPICTED HEREON. ADDITIONAL UNDERGROUND UTILITIES MAY EXIST. PRIOR TO ANY EXCAVATION OR CONSTRUCTION, CONTACT: "CALL BEFORE YOU DIG" 1-800-922-4455

GODFREY/HOFFMAN ASSOCIATES, LLC
PROFESSIONAL LAND SURVEYORS & CIVIL ENGINEERS
26 BROADWAY NORTH HAVEN, CT 06473
TEL: 203.239.4217 FAX: 203.234.2088 WWW.GODFREYHOFFMAN.COM

STATE OF CONNECTICUT JAMES R. ROSSI No. 15287 PROFESSIONAL ENGINEER

NOT VALID WITHOUT LIVE SIGNATURE AND SEAL

ALL WORK, LABOR, AND MATERIALS TO BE IN STRICT ACCORDANCE WITH ALL APPLICABLE CODES AND LAW IN THE EVENT OF ERRORS AND/OR OMISSIONS HEREIN.

THE INFORMATION CONTAINED HEREIN IS THE PROPRIETARY PROPERTY OF GODFREY/HOFFMAN ASSOCIATES, LLC. ANY REPRODUCTION IN WHOLE OR IN PART OR ANY EXPRESSION OF PROFESSIONAL OPINION BY THE NAMED RECIPIENT, WITHOUT WRITTEN PERMISSION IS PROHIBITED. THE RECIPIENT IS REQUIRED TO INDEMNIFY AND HOLD GODFREY/HOFFMAN ASSOCIATES, LLC HARMLESS FOR ANY REUSE OF THE DOCUMENTS OR INFORMATION CONTAINED HEREIN. THE INFORMATION CONTAINED HEREIN IS BELIEVED TO BE ACCURATE AND ARE BASED ON THE BEST OF THE PROFESSIONAL KNOWLEDGE AND BELIEF AS SUCH IT ARE VALID ONLY IF THEY BEAR THE LIVE SIGNATURE AND SEAL OF THE PROFESSIONAL ENGINEER OR LAND SURVEYOR.

© COPYRIGHT 2015, ALL RIGHTS RESERVED

REVISION SCHEDULE

NO.	DATE	DESCRIPTION
1	06.22.2015	ADJUST SILT FENCE LOCATION
2	08.22.2015	PER TOWN COMMENTS
3	09.02.2015	PROPOSED BUIDLINGS REMOVED

PROJECT:

FACILITY EXPANSION PROJECT

115 JOHN STREET
WALLINGFORD, CONNECTICUT

PREPARED FOR:

WALLINGFORD ENERGY II, LLC

400 CHESTERFIELD CENTER, SUITE 110
ST. LOUIS, MO 63017

SOIL EROSION & SEDIMENTATION CONTROL PLAN

DRAWN BY:	JT
CHECKED BY:	JR
SCALE:	1"=40'
PROJECT:	15-011
DATE:	6/2/2015

C-3.0

Exhibit 8 – Soil Erosion & Sediment Control Details

GENERAL NOTES:

1. HAYBALE FILTERS OR SILTATION FENCE WILL BE INSTALLED AT ALL CULVERT OUTLETS AND ALONG THE TOE OF ALL CRITICAL CUT AND FILL SLOPES.
2. CULVERT DISCHARGE AREAS WILL BE PROTECTED WITH RIPRAP CHANNELS; ENERGY DISSIPATORS WILL BE PROVIDED AS NECESSARY.
3. CATCH BASINS WILL BE PROTECTED WITH HAYBALE FILTERS OR SILTATION FENCE THROUGHOUT THE CONSTRUCTION PERIOD AND UNTIL ALL DISTURBED AREAS ARE THOROUGHLY STABILIZED.
4. ALL EROSION AND SEDIMENTATION CONTROL MEASURES WILL BE CONSTRUCTED IN ACCORDANCE WITH THE STANDARDS AND SPECIFICATIONS OF THE CONNECTICUT EROSION & SEDIMENT CONTROL HANDBOOK.
5. EROSION AND SEDIMENT CONTROL MEASURES WILL BE INSTALLED PRIOR TO CONSTRUCTION WHENEVER POSSIBLE.
6. ALL CONTROL MEASURES WILL BE MAINTAINED IN EFFECTIVE CONDITION THROUGHOUT THE CONSTRUCTION PERIOD.
7. ADDITIONAL CONTROL MEASURES WILL BE INSTALLED DURING THE CONSTRUCTION PERIOD, IF NECESSARY OR REQUIRED.
8. SEDIMENT REMOVED FROM CONTROL STRUCTURES WILL BE DISPOSED OF IN A MANNER WHICH IS CONSISTENT WITH THE INTENT OF THE PLAN.
9. CONTRACTOR IS ASSIGNED THE RESPONSIBILITY FOR IMPLEMENTING THIS EROSION AND SEDIMENT CONTROL PLAN. THIS RESPONSIBILITY INCLUDES THE INSTALLATION AND MAINTENANCE OF CONTROL MEASURES, INFORMING ALL PARTIES ENGAGED ON THE CONSTRUCTION SITE OF THE REQUIREMENTS AND OBJECTIVES OF THE PLAN, NOTIFYING THE CITY LAND USE OFFICE OF ANY TRANSFER OF THIS RESPONSIBILITY, AND FOR CONVEYING A COPY OF THE EROSION AND SEDIMENT CONTROL PLAN IF THE TITLE TO THE LAND IS TRANSFERRED.
10. AFFECTED PORTIONS OF OFF–SITE ROADS MUST BE SWEPT CLEAN WHEN REQUIRED OR AT LEAST ONCE A WEEK DURING CONSTRUCTION. DUST CONTROL TO BE ACHIEVED WITH COVERING TRUCK LOADS, SWEEPING ROADS, WATERING AS REQUIRED, OR AS ORDERED BY THE SITE ENGINEER.
11. BRUSH SHALL BE CHIPPED AND REMOVED FROM SITE. GRIND STUMPS OR TRANSPORT OFF– SITE; DO NOT BURY. TOPSOIL FROM DISTURBED AREAS SHALL BE STRIPPED AND STOCKPILED FOR USE IN FINAL LANDSCAPING.
12. AFTER EACH STORM EVENT OR ONCE WEEKLY, ALL SEDIMENT AND EROSION CONTROLS WILL BE INSPECTED. ANY CORRECTIVE ACTIONS TO MITIGATE ENVIRONMENTAL CONCERNS WILL BE ORDERED BY THE SITE ENGINEER OR SITE E&S CONTROL MONITOR.
13. ALL PERMANENT AND TEMPORARY SEDIMENT CONTROL DEVICES WILL BE MAINTAINED IN EFFECTIVE CONDITION UNTIL ALL UPLAND AREAS ARE FULLY STABILIZED. UPON COMPLETION OF WORK, ALL TEMPORARY SEDIMENT CONTROL DEVICES SUCH AS SILT FENCE AND HAYBALES SHOULD BE REMOVED FROM THE SITE AND SEDIMENT REMOVED FROM ALL ON–SITE CATCH BASINS AND DISPOSED OF LEGALLY.
14. NO CONSTRUCTION OR CONSTRUCTION EQUIPMENT WILL BE ALLOWED ON THE DOWNHILL SIDE OF THE SILT FENCE AS SHOWN ON PLANS, EXCEPT DURING CONSTRUCTION OF ANY ITEMS SHOWN DOWNHILL OF SILT FENCE.

SEQUENCE OF OPERATIONS:

1. FLAG LIMITS OF CONSTRUCTION. SCHEDULE PRE–CONSTRUCTION MEETING WITH REPRESENTATIVES OF THE OWNER, CONTRACTOR, ENGINEER AND LOCAL AUTHORITY.
2. HOLD PRE–CONSTRUCTION MEETING PRIOR TO ANY SITE DISTURBANCE. REVIEW EROSION CONTROL PLAN AND DISCUSS SCHEDULING OF SITE INSPECTIONS DURING CONSTRUCTION ACTIVITIES.
3. INSTALL CONSTRUCTION ENTRANCE.
4. INSTALL PERIMETER EROSION AND SEDIMENTATION CONTROLS IN ACCORDANCE WITH THE E&S CONTROL PLAN.
5. BEGIN EXCAVATION AND CONSTRUCTION OF FILL EMBANKMENTS. ESTABLISH SUB–GRADE ELEVATIONS FOR TOPSOIL AREAS AND ROADWAYS AS REQUIRED AND PREPARE BUILDING AND TURBINE PADS.
6. BEGIN BUILDING AND TURBINE CONSTRUCTION.
7. INSTALL UNDERGROUND UTILITIES (SANITARY, WATER SERVICE, STORM DRAIN SYSTEM AND OTHER UTILITIES) TO WITHIN 5 FEET OF THE BUILDING.
8. PREPARE SUB–BASE, SLOPES, DRIVEWAY AREAS AND OTHER AREAS OF DISTURBANCE FOR FINAL GRADING.
9. INSTALL DRIVEWAY AREA BASE MATERIALS AND COMPACT.
10. PLACE TOPSOIL WHERE REQUIRED. COMPLETE PERIMETER LANDSCAPING.
11. UPON SUBSTANTIAL COMPLETION OF THE BUILDING, COMPLETE THE BALANCE OF THE SITE WORK AND STABILIZATION OF ALL OTHER DISTURBED AREAS. INSTALL FIRST COURSE OF PAVING.
12. WHEN ALL OTHER WORK HAS BEEN COMPLETED, REPAIR AND SWEEP ALL PAVED AREAS FOR THE FINAL COURSE OF PAVING. INSPECT THE DRAINAGE SYSTEM AND CLEAN AS NEEDED.
13. INSTALL FINAL COURSE OF PAVEMENT.
14. AFTER SITE IS STABILIZED REMOVE TEMPORARY EROSION AND SEDIMENT CONTROLS.

OPERATION & MAINTENANCE OF EROSION AND SEDIMENTATION CONTROL MEASURES

1. SILTATION FENCE

1.1. ALL SILTATION FENCES SHALL BE INSPECTED AFTER EACH RAINFALL. ALL DETERIORATED FABRIC AND DAMAGED POSTS SHALL BE REPLACED AND PROPERLY REPOSITIONED IN ACCORDANCE WITH THIS PLAN.

1.2. SEDIMENT DEPOSITS SHALL BE REMOVED FROM BEHIND THE FENCE WHEN THEY EXCEED A HEIGHT OF ONE FOOT.

2. HAYBALES

2.1. ALL HAYBALE RINGS SHALL BE INSPECTED FOLLOWING EACH RAINFALL. REPAIR OR REPLACEMENT SHALL BE PROMPTLY MADE AS NEEDED.

2.2. DEPOSITS SHALL BE REMOVED AND CLEANED–OUT IF ONE HALF OF THE ORIGINAL HEIGHT OF THE BALES BECOMES FILLED WITH SEDIMENT.

CONTINGENCY EROSION PLAN:

SHOULD UNFORESEEN EROSION OR SEDIMENTATION PROBLEMS ARISE, THE DESIGN ENGINEER OF RECORD AND LOCAL ENFORCEMENT AGENT SHALL BE NOTIFIED IMMEDIATELY. AN INSPECTION OF THE AFFECTED AREA(S) SHALL BE PROMPTLY PERFORMED. A REMEDIAL ACTION PLAN SHALL BE FORMULATED WITH THE LOCAL ENFORCEMENT AGENT'S APPROVAL. THE SITE CONTRACTOR SHALL THEN IMPLEMENT THE RECOMMENDED COURSE OF ACTION WHICH HAS BEEN DETERMINED BY BOTH THE ENGINEER AND LOCAL ENFORCEMENT AGENT.

DUST CONTROL:

THE CONTRACTOR SHALL PROVIDE DUST CONTROL THROUGHOUT THE PROJECT UNTIL SUCH TIME AS ALL DISTURBED AREAS HAVE BEEN STABILIZED. THE CONTRACTOR SHALL UTILIZE METHODS ACCEPTABLE TO THE TOWN ENVIRONMENTAL ENFORCEMENT OFFICER. THE FOLLOW OPERATIONS SHALL BE PERFORMED AS A MINIMUM:

1. PERIODICALLY MOISTEN EXPOSED SOIL AREAS WITH WATER ON UNPAVED SURFACES.
2. USE OF MECHANICAL SWEEPING ON PAVED AREAS WHERE DUST AND FINE MATERIALS ACCUMULATE AS A RESULT OF TRUCK TRAFFIC, PAVEMENT SAW CUTTING SPILLAGE, AND WIND OR WATER DEPOSITION FROM ADJACENT DISTURBED AREAS. SWEEP DAILY IN HEAVILY TRAFFICKED AREAS OR AS WARRANTED.
3. REPEAT APPLICATION OF DUST CONTROL MEASURES WHEN DUST CONDITIONS BECOME EVIDENT.

TOPSOIL (TO)

MATERIALS:

TOPSOIL SHALL INCLUSIVELY MEAN A SOIL:

MEETING ONE OF THE FOLLOWING SOIL TEXTURES CLASSED ESTABLISHED BY THE USDA CLASSIFICATION SYSTEM BASED UPON THE PROPORTION OF SAND, SILT AND CLAY SIZE PARTICLES AFTER PASSING A 2 MM SIEVE AND SUBJECTED TO A PARTICLE SIZE ANALYSIS: LOAMY SAND, INCLUDING COARSE, LOAMY FINE, AND LOAMY VERY FINE SAND, SANDY LOAM, INCLUDING COARSE, FINE AND VERY FINE SANDY LOAM, LOAM, OR SILT LOAM WITH NOT MORE THAN 60% SILT; CONTAINING NOT LESS THAN 6% AND NOT MORE THAN 20% ORGANIC MATTER AS DETERMINED BY LOSS–ON–IGNITION OF OVEN DRIED SAMPLES DRIED AT 105 DEGREES CENTIGRADE; POSSESSING A PH RANGE OF 6.0–7.5, EXCEPT IF THE VEGETATIVE PRACTICE BEING USED SPECIFICALLY REQUIRES A LOWER PH, THEN THE PH MAY BE ADJUSTED ACCORDINGLY; HAVING SOLUBLE SALTS NOT EXCEEDING 500 PPM, AND THAT IS LOOSE AND FRIABLE AND FREE FROM REFUSE, STUMPS, ROOTS, BRUSH, WEEDS, FROZEN PARTICLES, ROCKS AND STONES OVER 1 ¼" IN DIAMETER, AND ANY MATERIAL THAT WILL PREVENT THE FORMATION OF A SUITABLE SEEDBED AND PREVENT SEED GERMINATION AND PLANT GROWTH. TOPSOIL MAY OF NATURAL ORIGIN OR MANUFACTURED BY BLENDING COMPOSTED ORGANIC MATERIALS WITH ORGANIC DEFICIENT SOILS, MINERAL SOILS, SAND AND LIME SUCH THAT THE RESULTING SOIL MEETS THE MATERIAL SPECIFICATIONS ABOVE.

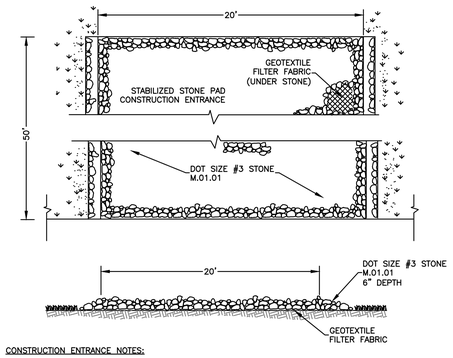

CONSTRUCTION ENTRANCE NOTES:

1. MATERIALS

1.1. STONE: USE ANGULAR STONE SIZED ACCORDING TO THE STANDARDS SET BY ASTM C–33, SIZE NO. 2 OR 3, OR DOT STANDARD SPECIFICATIONS SECTION M.01.01, SIZE #3.

1.2. GEOTEXTILE: FIBERS USED IN THE GEOTEXTILE SHALL CONSIST OF SYNTHETIC POLYMERS COMPOSED OF AT LEAST 85% BY WEIGHT POLYPROPYLENES, POLYESTERS, AND POLYAMIDES, POLYETHYLENE, POLYOLEFINS, OR POLYVINYLIDENE–CHLORIDES. THE FIBERS SHALL BE FORMED IN A STABLE NETWORK OF FILAMENDS OR YARNS RETAINING DIMENSIONAL STABILITY RELATIVE TO EACH OTHER. THE GEOTEXTILE USED SHALL BE SPECIFICALLY INTENDED FOR "ROAD STABILIZATION" APPLICATIONS AND SHALL BE CONSISTENT WITH THE MANUFACTURER'S RECOMMENDATIONS FOR THE INTENDED USE.

2. DIMENSIONS SHALL BE AS INDICATED ON THE DETAIL

3. CONSTRUCTION: CLEAR THE AREA OF THE ENTRANCE OF ALL VEGETATION, ROOTS, AND OTHER OBJECTIONABLE MATERIAL. AT POORLY DRAINED LOCATIONS INSTALL SUBSURFACE DRAINAGE INSURING THE OUTLETS TO THE DRAINS ARE FREE–FLOWING. IF USING GEOTEXTILE IN PLACE OF A FREE DRAINING MATERIAL, UNROLL THE GEOTEXTILE IN A DIRECTION PARALLEL TO THE ROADWAY CENTERLINE IN A LOOSE MANNER PERMITTING IT TO CONFORM TO THE SURFACE IRREGULARITIES WHEN THE STONE IS PLACED. THE GEOTEXTILE MAY BE TEMPORARILY SECURED WITH PINS RECOMMENDED OR PROVIDED BY THE MANUFACTURER BUT THEY SHALL BE REMOVED PRIOR TO PLACEMENT OF THE STONE. PLACE THE STONE TO THE SPECIFIED DIMENSIONS. KEEP ADDITIONAL; STONE AVAILABLE OR STOCKPILE OF FUTURE USE.

4. MAINTENANCE: MAINTAIN THE ENTRANCE IN A CONDITION WHICH WILL PREVENT TRACKING AND WASHING OF THE SEDIMENT ONTO PAVED SURFACES. PROVIDE PERIODIC TOP DRESSING WITH ADDITIONAL STONE OR ADDITIONAL LENGTH AS CONDITIONS DEMAND. ROADS ADJACENT TO THE CONSTRUCTION SITE SHALL BE LEFT CLEAN AT THE END OF EACH DAY. IF THE CONSTRUCTION ENTRANCE IS BEING PROPERLY MAINTAINED AND THE ACTION OF A VEHICLE TRAVELING OVER THE STONE PAD IS NOT SUFFICIENT TO REMOVE THE MAJORITY OF THE SEDIMENT, THEN EITHER (1) INCREASE THE LENGTH OF THE CONSTRUCTION ENTRANCE, OR (2) MODIFY THE CONSTRUCTION ACCESS ROAD SURFACE, OR (3) INSTALL WASHING RACKS AND ASSOCIATED SETTLING AREA OR SIMILAR DEVICES BEFORE THE VEHICLE ENTERS PAVED SURFACES.

CONSTRUCTION ENTRANCE

NOT TO SCALE

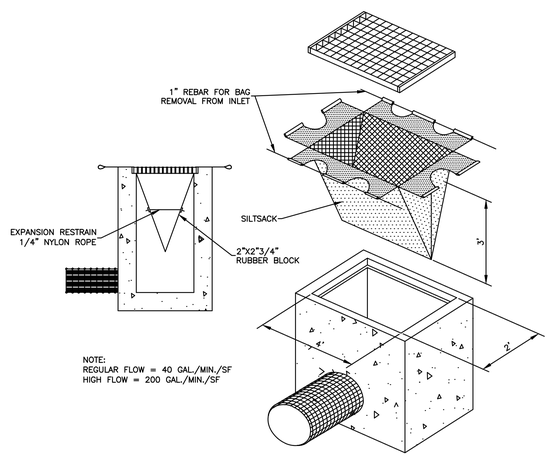

SILTSACK DETAIL

NOT TO SCALE

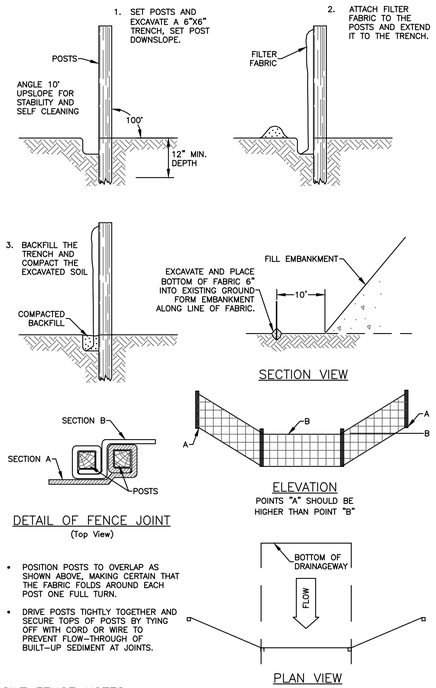

- POSITION POSTS TO OVERLAP AS SHOWN ABOVE, MAKING CERTAIN THAT THE FABRIC FOLDS AROUND EACH POST ONE FULL TURN.
- DRIVE POSTS TIGHTLY TOGETHER AND SECURE TOPS OF POSTS BY TYING OFF WITH CORD OR WIRE TO PREVENT FLOW–THROUGH OF BUILT–UP SEDIMENT AT JOINTS.

SILT FENCE NOTES:

MATERIALS:

GEOTEXTILE FABRIC:
GEOTEXTILE FABRIC SHALL BE A PERVIOUS SHEET OF POLYPROPYLENE, NYLON, POLYESTER, ETHYLENE OR SIMILAR FILAMENTS AND SHALL CONFORM TO THE FOLLOWING REQUIREMENTS:

PHYSICAL PROPERTY	TEST METHOD	MINIMUM REQUIREMENT
FILTERING EFFICIENCY	ASTM 5141	75% (MINIMUM)
GRAB TENSILE STRENGTH	ASTM D4632	100 LBS.
ELONGATION @ FAILURE	ASTM D4632	75%
MULLEN BURST STRENGTH	ASTM D3786	250 PSI
PUNCTURE STRENGTH	ASTM 4833	50 LBS.
APPARENT OPENING SIZE	ASTM D4751	NO LESS THAN 0.90 MM AND NO GREATER TAN 0.60 MM
FLOW RATE	ASTM D4491	0.2 GAL/FT²/MIN.
PERMATIVITY	ASTM D4491	0.05 SEC. –1 (MIN.)
ULTRAVIOLET RADIATION STABILITY %	ASTM D4355	70% AFTER 500 HOURS OF EXPOSURE (MIN.)

SUPPORTING POSTS:
POSTS SHALL BE AT LEAST 42" LONG MADE OF EITHER 1.5 INCH SQUARE HARDWOOD STAKES OR SHALL BE POSTS WITH PROJECTS FOR FASTENING THE GEOTEXTILE POSSESSING A MINIMUM STRENGTH OF 0.5 POUNDS PER LINEAR FOOT.

INSTALLATION:

TRENCH EXCAVATION:
EXCAVATE A TRENCH 6 INCHES DEEP AND 6 INCHES WIDE ON THE UPHILL SIDE OF THE FENCE LOCATION. FOR SLOPE AND SWALE INSTALLATIONS, EXTEND THE ENDS OF THE TRENCH UPHILL SO THAT THE BOTTOM END OF THE FENCE WILL BE HIGHER THAN THE TOP OF THE LOWEST PORTION OF THE FENCE.

SUPPORT POSTS:
INSTALL SUPPORT POSTS ON THE DOWNHILL SIDE OF THE TRENCH TO A MINIMUM DEPTH OF 12 INCHES TO ORIGINAL GROUND. SUPPORT POSTS SHALL BE SPACED NO GREATER THAN 10 FEET APART. SUPPORT POSTS SHOULD BE INSTALLED CLOSER THAN 10 FEET ON STEEP SLOPES OR WHEN CONCENTRATED FLOWS ARE ANTICIPATED.

GEOTEXTILE FILTER FABRIC:
STAPLE OR SECURE THE GEOTEXTILE TO THE SUPPORT POSTS PER MANUFACTURER'S INSTRUCTION SUCH THAT AT LEAST 6 INCHES OF GEOTEXTILE LIES WITHIN THE TRENCH. THE HEIGHT OF THE FENCE SHALL NOT EXCEED 30 INCHES.

BACKFILL & COMPACTION:
BACKFILL TRENCH WITH TAMPED SOIL OR AGGREGATE OVER THE GEOTEXTILE.

MAINTENANCE:

SILT FENCE SHOULD BE INSPECTED AT LEAST ONCE A WEEK AND WITHIN 24 HOURS OF THE END OF A STORM WITH A RAINFALL AMOUNT OF 0.5 INCHES OR GREATER. SEDIMENT DEPOSITS ARE TO BE REMOVED. FENCE SHOULD BE REPAIRED OR REPLACES WITHIN 24 HOURS OF OBSERVED FAILURE.

GEOTEXTILE SILT FENCE (GSF):

NOT TO SCALE

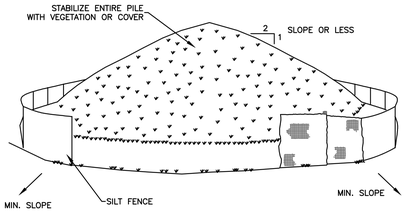

INSTALLATION NOTES:

1. AREA CHOSEN FOR STOCKPILING OPERATIONS SHALL BE DRY AND STABLE.
2. MAXIMUM SLOPE OF STOCKPILE SHALL BE 2 HORIZONTAL TO 1 VERTICAL.
3. UPON COMPLETION OF SOIL STOCKPILING, EACH PILE SHALL BE SURROUNDED WITH EITHER SILT FENCING OR STRAWBALES, THEN STABILIZED WITH VEGETATION OR COVERED.

SOIL STOCKPILING

NOT TO SCALE

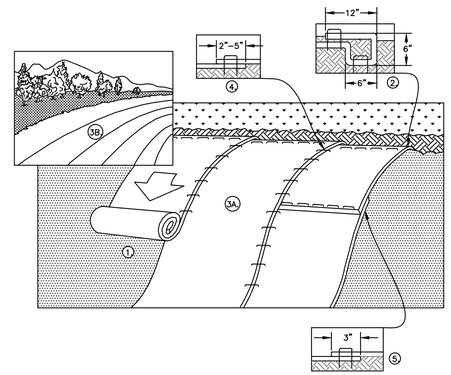

INSTALLATION PROCEDURE:

1. PREPARE SOIL BEFORE INSTALLING BLANKETS, INCLUDING ANY NECESSARY APPLICATION OF LIME, FERTILIZER, AND SEED.
2. BEGIN AT THE TOP OF THE SLOPE BY ANCHORING THE BLANKET IN A 6" (15cm) DEEP X 6" (15cm) WIDE TRENCH WITH APPROXIMATELY 12" (30cm) OF BLANKET EXTENDED BEYOND THE UP–SLOPE PORTION OF THE TRENCH. ANCHOR THE BLANKET WITH A ROW OF STAPLES/STAKES APPROXIMATELY 12" (30cm) APART IN THE BOTTOM OF THE TRENCH. BACKFILL AND COMPACT THE TRENCH AFTER STAPLING. APPLY SEED TO COMPACTED SOIL AND FOLD REMAINING 12" (30cm) PORTION OF BLANKET BACK OVER SEED AND COMPACTED SOIL. SECURE BLANKET OVER COMPACTED SOIL WITH A ROW OF STAPLES/STAKES SPACED APPROXIMATELY 12" (30cm) APART ACROSS THE WIDTH OF THE BLANKET.
3. ROLL THE BLANKETS (A.) DOWN OR (B.) HORIZONTALLY ACROSS THE SLOPE. BLANKETS WILL UNROLL WITH APPROPRIATE SIDE AGAINST THE SOIL SURFACE. ALL BLANKETS MUST BE SECURELY FASTENED TO SOIL SURFACE BY PLACING STAPLES/STAKES IN APPROPRIATE LOCATIONS AS SHOWN IN THE STAPLE PATTERN GUIDE. WHEN USING OPTIONAL DOT SYSTEM , STAPLES/STAKES SHOULD BE PLACED THROUGH EACH OF THE COLORED DOTS CORRESPONDING TO THE APPROPRIATE STAPLE PATTERN.
4. THE EDGES OF PARALLEL BLANKETS MUST BE STAPLED WITH APPROXIMATELY 2"–5" (5cm–12.5cm) OVERLAP DEPENDING ON BLANKET TYPE. TO ENSURE PROPER SEAM ALIGNMENT, PLACE THE EDGE OF THE OVERLAPPING BLANKET (BLANKET BEING INSTALLED ON TOP) EVEN WITH THE COLORED SEAM STITCH ON THE PREVIOUSLY INSTALLED BLANKET.
5. CONSECUTIVE BLANKETS SPLICED DOWN THE SLOPE MUST BE PLACED END OVER END (SHINGLE STYLE) WITH AN APPROXIMATE 3" (7.5cm) OVERLAP. STAPLE THROUGH OVERLAPPED AREA, APPROXIMATELY 12" (30cm) APART ACROSS ENTIRE BLANKET WIDTH.

EROSION CONTROL BLANKET NOTES:

1. EROSION CONTROL BLANKET TO BE INSTALLED ON ALL SLOPES 3 HORIZONTAL TO 1 VERTICAL OR STEEPER.
2. IN LOOSE SOIL CONDITIONS, THE USE OF STAPLE OR STAKE LENGTHS GREATER THAN 6" (15 CM) MAY BE NECESSARY TO PROPERLY SECURE THE BLANKETS

EROSION CONTROL BLANKET

NOT TO SCALE

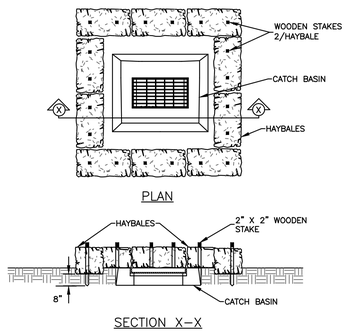

HAYBALES AT CATCH BASIN

NOT TO SCALE

GODFREY/HOFFMAN ASSOCIATES, LLC
PROFESSIONAL LAND SURVEYORS & CIVIL ENGINEERS
26 BROADWAY NORTH HAVEN, CT 06473
TEL: 203.239.4217 FAX: 203.234.2088 WWW.GODFREYHOFFMAN.COM

STATE OF CONNECTICUT, JAMES M. JOHNSON, 24 CT No. 18987, LICENSED PROFESSIONAL ENGINEER

NOT VALID WITHOUT LIVE SIGNATURE AND SEAL

ALL WORK, LABOR, AND MATERIALS TO BE IN STRICT ACCORDANCE WITH ALL APPLICABLE CODES AND LAW IN EFFECT AT THE JURISDICTION IN WHICH THE WORK IS TO BE PERFORMED. IN NO EVENT SHALL THE INFORMATION CONTAINED HEREIN BE SUBSTITUTED FOR THE EXPRESSION OF PROFESSIONAL OPINION BY THE LAND SURVEYOR, ENGINEER OR ARCHITECT AS TO WHAT IS BEST FOR THE BEST INTERESTS OF THE PROPERTY OWNER. THE INFORMATION CONTAINED HEREIN IS THE PROPRIETARY AND CONFIDENTIAL PROPERTY OF GODFREY/HOFFMAN ASSOCIATES, LLC AND SHALL NOT BE REPRODUCED OR REUSED WITHOUT WRITTEN PERMISSION. ALL DRAWINGS, MANUALS, SPECIFICATIONS, RECORDS, AND OTHER DOCUMENTS PROVIDED BY THE CONSULTANT ARE VALID ONLY WHEN THEY BEAR THE LIVE SIGNATURE AND SEAL OF THE PROFESSIONAL ENGINEER, ARCHITECT OR LAND SURVEYOR.
© COPYRIGHT 2015, ALL RIGHTS RESERVED

REVISION SCHEDULE

NO.	DATE	DESCRIPTION

PROJECT:

FACILITY EXPANSION PROJECT

115 JOHN STREET
WALLINGFORD, CONNECTICUT

PREPARED FOR:

WALLINGFORD ENERGY II, LLC

400 CHESTERFIELD CENTER, SUITE 110
ST. LOUIS, MO 63017

SOIL EROSION & SEDIMENTATION CONTROL DETAILS

DRAWN BY:	JT
CHECKED BY:	JR
SCALE:	1"=40'
PROJECT:	15-011
DATE:	6/2/2015

C-3.1

Exhibit 9 – Material Laydown and Site Access

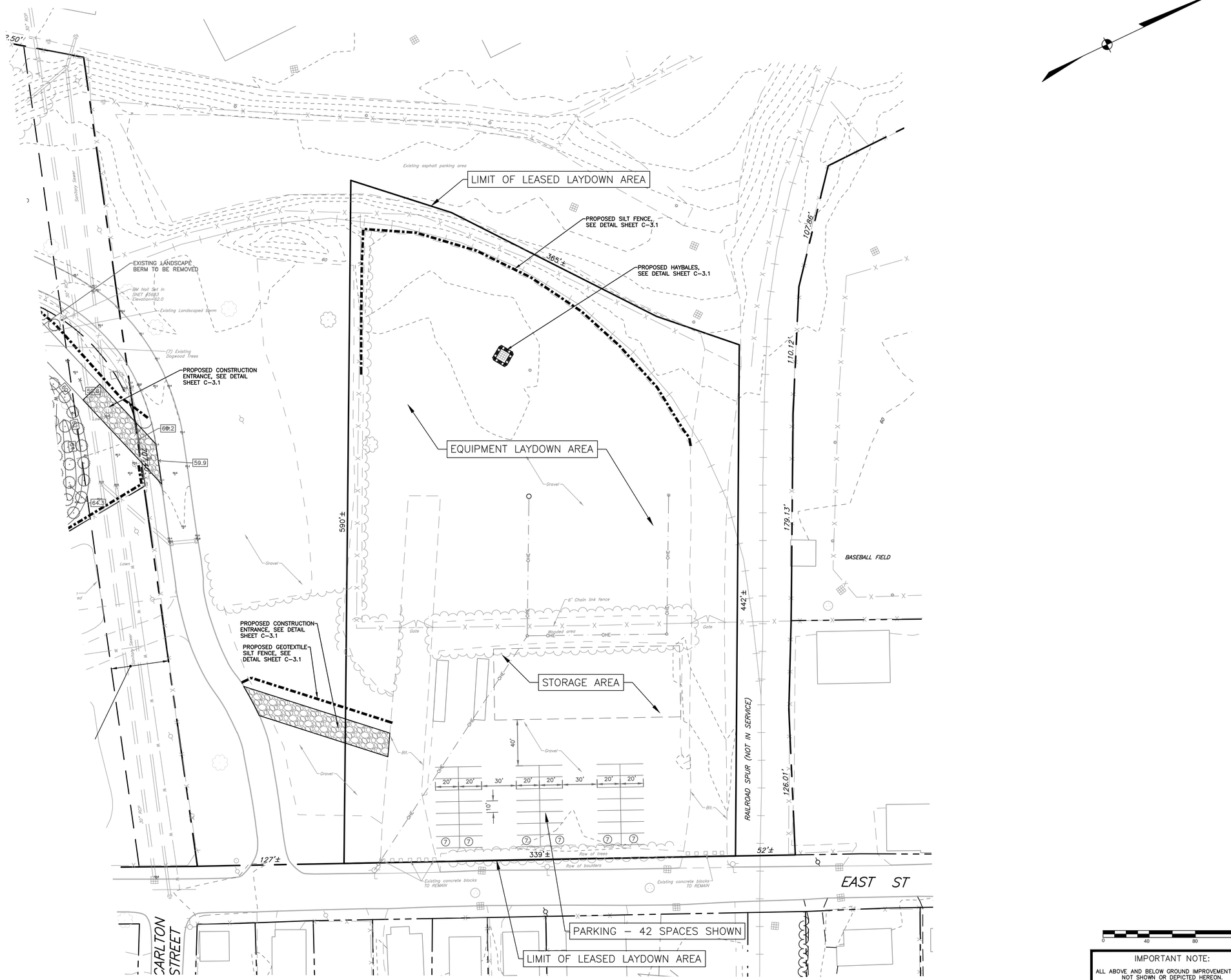

0 40 80 120

IMPORTANT NOTE:

ALL ABOVE AND BELOW GROUND IMPROVEMENTS ARE NOT SHOWN OR DEPICTED HEREON. ADDITIONAL UNDERGROUND UTILITIES MAY EXIST. PRIOR TO ANY EXCAVATION OR CONSTRUCTION, CONTACT: "CALL BEFORE YOU DIG" 1-800-922-4455

GODFREY/HOFFMAN ASSOCIATES, LLC
PROFESSIONAL LAND SURVEYORS & CIVIL ENGINEERS
26 BROADWAY NORTH HAVEN, CT 06473
TEL: 203.239.4217 FAX: 203.234.2088 WWW.GODFREYHOFFMAN.COM

STATE OF CONNECTICUT PROFESSIONAL ENGINEER No. 17887

NOT VALID WITHOUT LIVE SIGNATURE AND SEAL

ALL WORK, LABOR, AND MATERIALS TO BE IN STRICT ACCORDANCE WITH ALL APPLICABLE CODES AND LAW IN THE STATE OF CONNECTICUT. NOTIFY ENGINEER IMMEDIATELY IN EVENT OF ERRORS AND/OR OMISSIONS HEREIN.

THIS DOCUMENT, TOGETHER WITH THE INFORMATION TO BE ISSUED IN AN EXPRESSION OF PROFESSIONAL OPINION BY THE LAND SURVEYOR, IS TRANSMITTED TO THE RECEIVER AS THE LAND SURVEYOR'S BEST OPINION BASED ON INFORMATION AND BELIEF AS SUCH IT IS SUBJECT TO CHANGE UPON FURTHER INVESTIGATION.

THE INFORMATION CONTAINED HEREIN IS THE PROPRIETARY AND CONFIDENTIAL PROPERTY OF GODFREY-HOFFMAN ASSOCIATES, LLC AND MAY BE INTENDED FOR USE ONLY AS REQUIRED TO WITHIN THE RECEIVER'S ORGANIZATION. WRITTEN PERMISSION IF GODFREY-HOFFMAN ASSOCIATES, LLC IS REQUIRED FOR ANY OTHER USE. THE DRAWINGS ARE VALID ONLY IF THEY BEAR THE LIVE SIGNATURE AND SEAL OF A LICENSED PROFESSIONAL ENGINEER OR LICENSED PROFESSIONAL LAND SURVEYOR.

© COPYRIGHT 2015, ALL RIGHTS RESERVED

REVISION SCHEDULE

NO.	DATE	DESCRIPTION

PROJECT: FACILITY EXPANSION PROJECT LEASED LAYDOWN AREA

115 JOHN STREET
WALLINGFORD, CONNECTICUT

PREPARED FOR:

WALLINGFORD ENERGY II, LLC

400 CHESTERFIELD CENTER, SUITE 110
ST. LOUIS, MO 63017

POTENTIAL LAYOUT LEASED LAYDOWN AREA

DRAWN BY:	MP
CHECKED BY:	JR
SCALE:	1"=40'
PROJECT:	15-011
DATE:	8/22/2016

C-4.0

Exhibit 10 – Filter/Separator and Low Flow Meter Modification

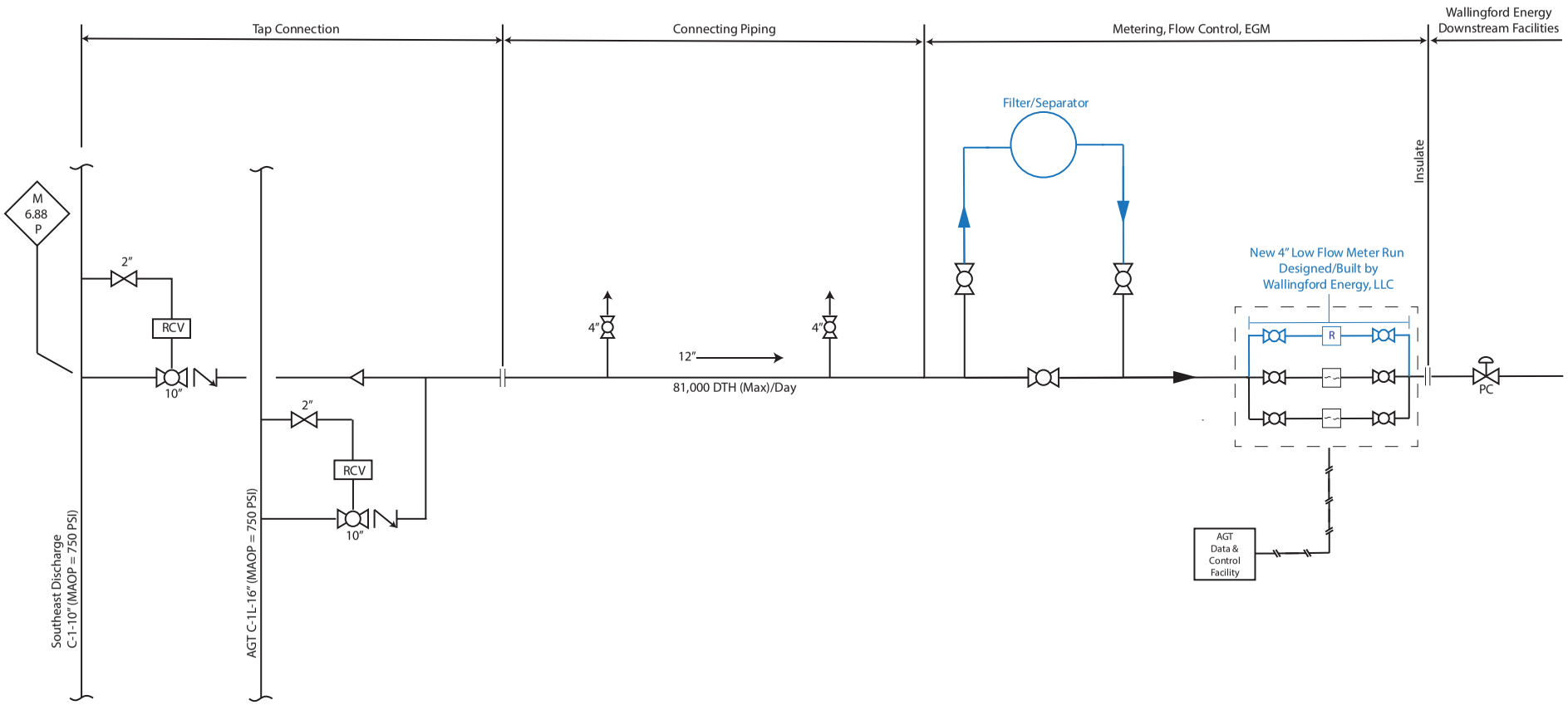

Wallingford Energy Pipeline Interconnect Upgrade

Legend

Blue - Existing Equipment to be Upgraded

Black - Existing Equipment

Appendix B: Construction Details

Exhibit 1 – Foundation Plans

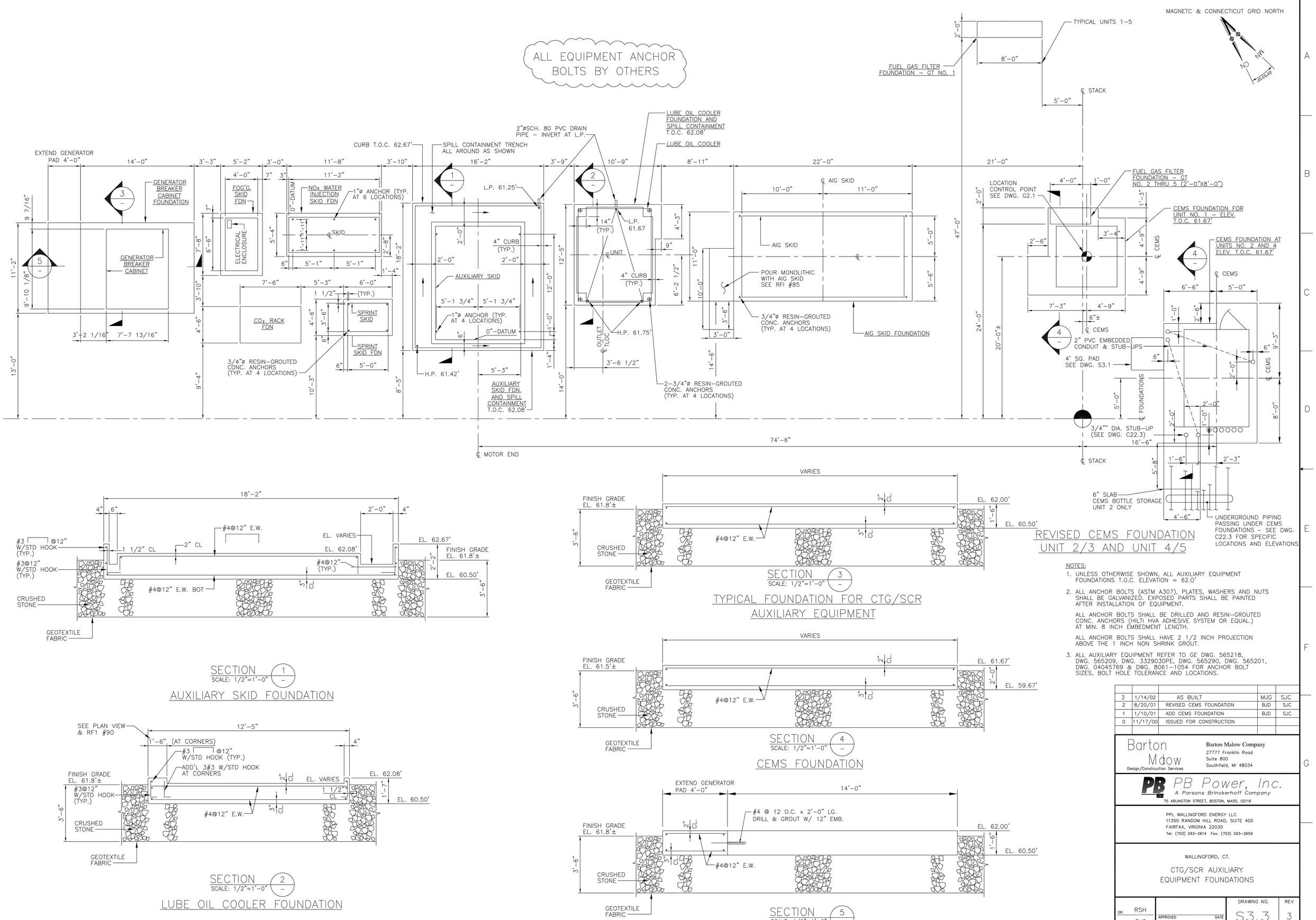

REVISED CEMS FOUNDATION
UNIT 2/3 AND UNIT 4/5

SECTION 1
SCALE: 1/2"=1'–0"

AUXILIARY SKID FOUNDATION

SECTION 2
SCALE: 1/2"=1'–0"

LUBE OIL COOLER FOUNDATION

SECTION 3
SCALE: 1/2"=1'–0"

TYPICAL FOUNDATION FOR CTG/SCR AUXILIARY EQUIPMENT

SECTION 4
SCALE: 1/2"=1'–0"

CEMS FOUNDATION

SECTION 5
SCALE: 1/2"=1'–0"

NOTES:

1. UNLESS OTHERWISE SHOWN, ALL AUXILIARY EQUIPMENT FOUNDATIONS T.O.C. ELEVATION = 62.0'
2. ALL ANCHOR BOLTS (ASTM A307), PLATES, WASHERS AND NUTS SHALL BE GALVANIZED. EXPOSED PARTS SHALL BE PAINTED AFTER INSTALLATION OF EQUIPMENT.

   ALL ANCHOR BOLTS SHALL BE DRILLED AND RESIN–GROUTED CONC. ANCHORS (HILTI HVA ADHESIVE SYSTEM OR EQUAL.) AT MIN. 8 INCH EMBEDMENT LENGTH.

   ALL ANCHOR BOLTS SHALL HAVE 2 1/2 INCH PROJECTION ABOVE THE 1 INCH NON SHRINK GROUT.
3. ALL AUXILIARY EQUIPMENT REFER TO GE DWG. 565218, DWG. 565209, DWG. 3329030PE, DWG. 565290, DWG. 565201, DWG. 04045769 & DWG. 8061–1054 FOR ANCHOR BOLT SIZES, BOLT HOLE TOLERANCE AND LOCATIONS.

3	1/14/02	AS BUILT	MJG	SJC
2	8/20/01	REVISED CEMS FOUNDATION	BJD	SJC
1	1/10/01	ADD CEMS FOUNDATION	BJD	SJC
0	11/17/00	ISSUED FOR CONSTRUCTION		

Barton Malow Design/Construction Services

Barton Malow Company
27777 Franklin Road
Suite 800
Southfield, MI 48034

PB Power, Inc.
A Parsons Brinckerhoff Company
75 ARLINGTON STREET, BOSTON, MASS. 02116

PPL WALLINGFORD ENERGY LLC
11350 RANDOM HILL ROAD, SUITE 400
FAIRFAX, VIRGINIA 22030
Tel: (703) 293–2614 Fax: (703) 293–2659

WALLINGFORD, CT.

CTG/SCR AUXILIARY EQUIPMENT FOUNDATIONS

DR. RSH
DES. SJC
CHK. WRM
APPROVED DATE
PRINCIPAL IN CHARGE DATE
DRAWING NO. S3.3
REV 3
SHEET 1 OF 1

\\BDSC\CADD1\PP&L GLOBAL\25846_PEAK\POWER PLANT FOR CONSTRUCTION\FC STRUCTURAL\S3-3.DWG 01/18/02 10:44

C:\Documents and Settings\Control\Desktop\Drawings & References\PB Power\PB Power Structural\S03.03.dwg, 5/24/2013 10:43:22 AM, PDF Creator

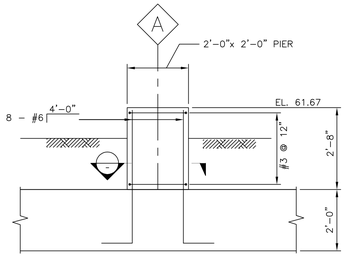

PIER DETAIL (A / S3.1)
SCALE:1/2"=1'-0"
FOR PIERS A 1 THROUGH 4
K 1 THROUGH 4

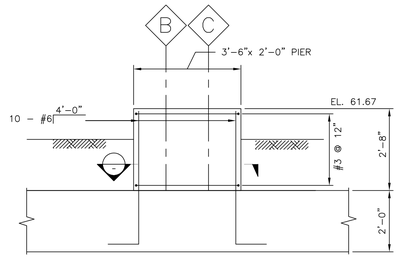

PIER DETAIL (B / S3.1)
SCALE: 1/2"=1'-0"
FOR PIERS BC 1 THROUGH 4
DE 1 THROUGH 4
FG 1 THROUGH 4
HJ 1 THROUGH 4

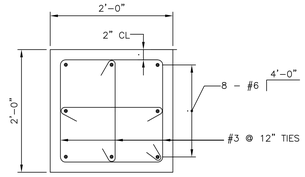

PIER SECTION (1 / S3.2)
SCALE:1"=1'-0"

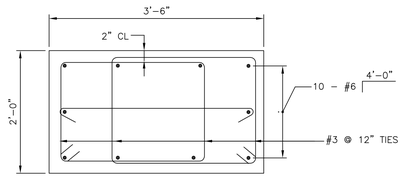

PIER SECTION (2 / S3.2)
SCALE: 1"=1'-0"

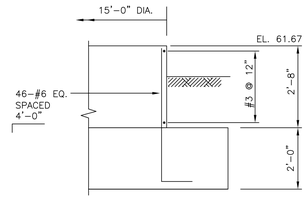

SECTION (3 / S3.1)
SCALE: 1/2"=1'-0"

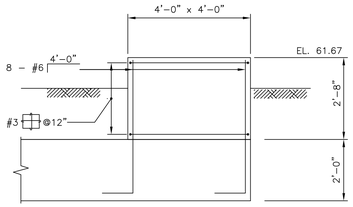

SECTION (4 / S3.1)
SCALE: 1/2"=1'-0"

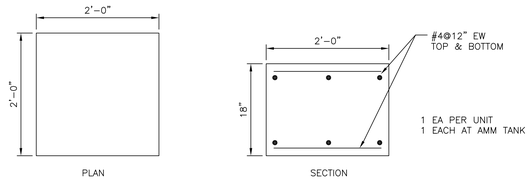

EMERGENCY SHOWER PAD
SCALE: 1"=1'-0"

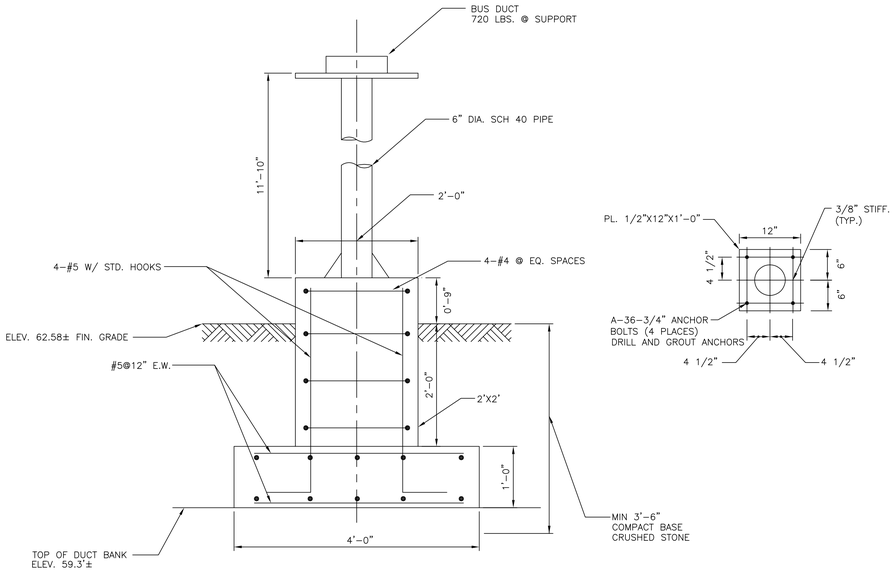

T8/T10 TO POB
BUS DUCT SUPPORT FOUNDATION DETAIL
SEE S5.1 FOR LOCATION
SCALE: 1"=1'-0"

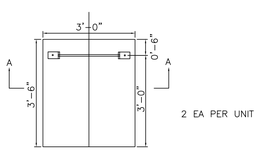

PLAN – STACK/SCR
SCALE: NTS

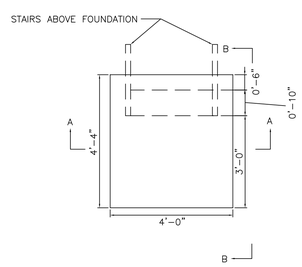

PLAN – SCR STAIR LANDING PAD
SCALE: NTS

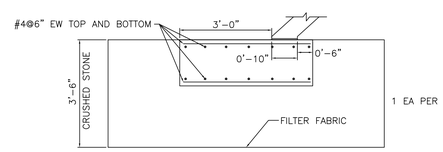

SECTION BB
SCALE: NTS

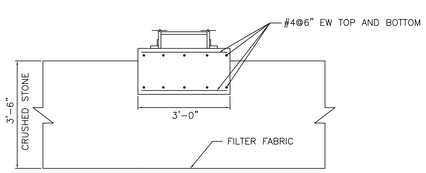

SECTION AA
SCALE: NTS

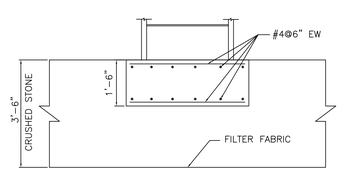

SECTION AA
SCALE: NTS

1	1/16/02	AS BUILT	MJG	SJC
0	10/6/00	ISSUED FOR CONSTRUCTION	JLM	WRM

Barton Malow Design/Construction Services

Barton Malow Company
27777 Franklin Road
Suite 800
Southfield, MI 48034

PB Power, Inc.
A Parsons Brinckerhoff Company
75 ARLINGTON STREET, BOSTON, MASS. 02116

PPL WALLINGFORD ENERGY LLC
11350 RANDOM HILL ROAD, SUITE 400
FAIRFAX, VIRGINIA 22030
Tel: (703) 293-2614 Fax: (703) 293-2659

WALLINGFORD, CT.

CTG & SCR/STACK
FOUNDATIONS

DR. MYM
DES. WRM
CHK. FM

APPROVED DATE
PRINCIPAL IN CHARGE DATE

DRAWING NO. S3.2
REV 1
SHEET 2 OF 2

\\BDSC\CADD1\PP&L GLOBAL\25846_PEAK\POWER PLANT FOR CONSTRUCTION\FC STRUCTURAL\S3-2.DWG 01/18/02 10:54

C:\Documents and Settings\Control\Desktop\Drawings & References\PB Power\PB Power Structural\S03.02.dwg, 5/24/2013 10:42:16 AM, PDF Creator

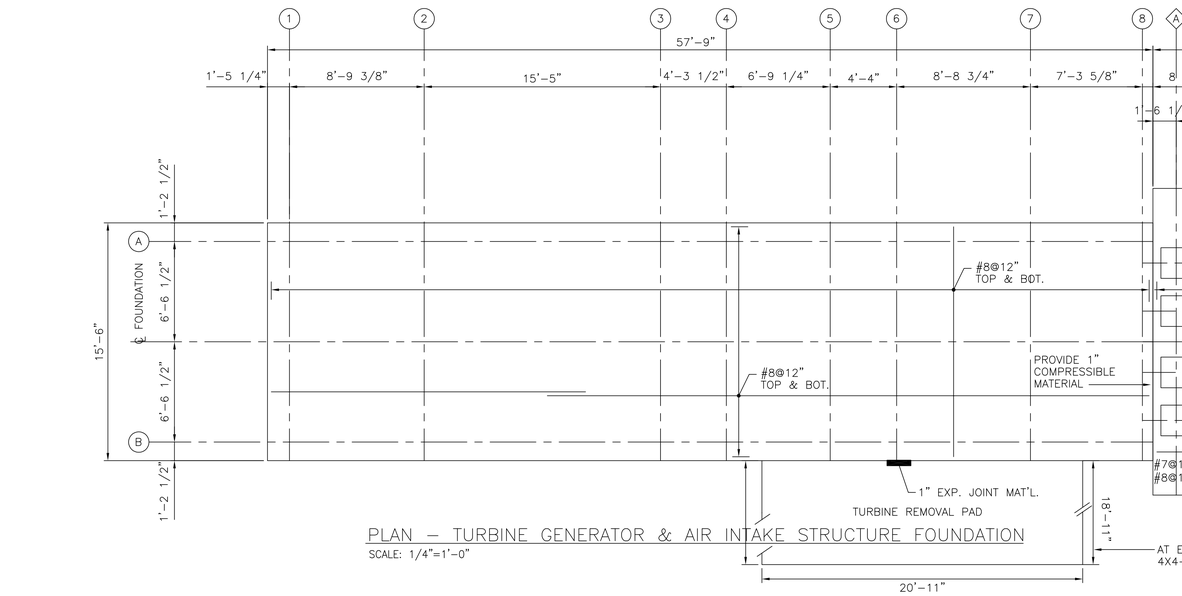

PLAN – TURBINE GENERATOR & AIR INTAKE STRUCTURE FOUNDATION

SCALE: 1/4"=1'-0"

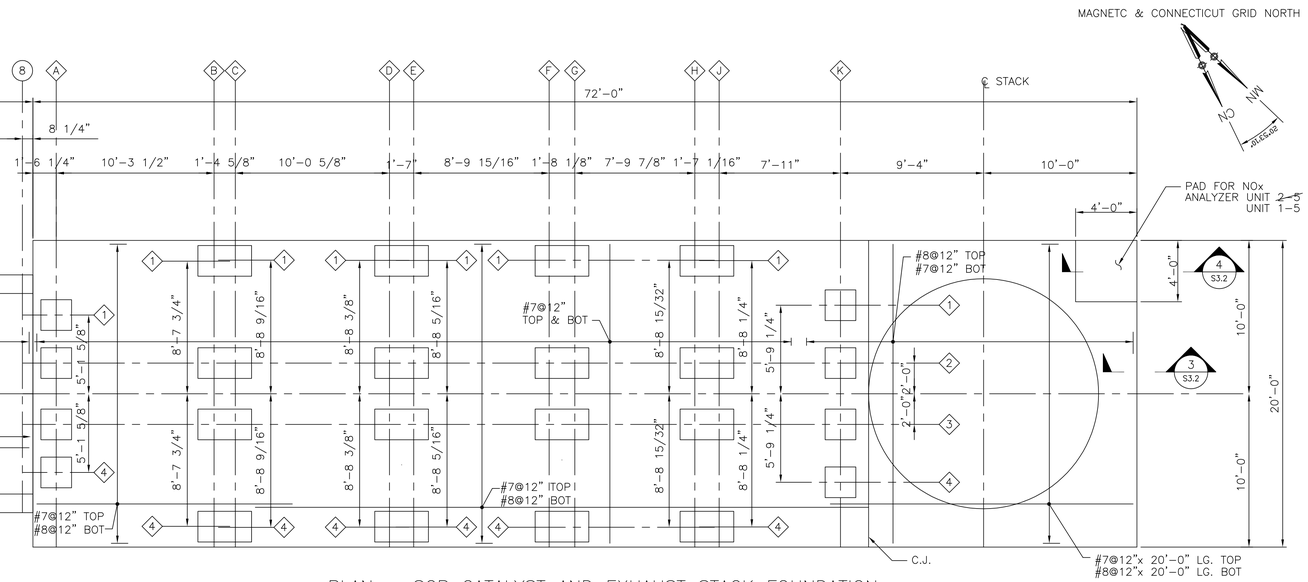

PLAN – SCR CATALYST AND EXHAUST STACK FOUNDATION

SCALE: 1/4"=1'-0"

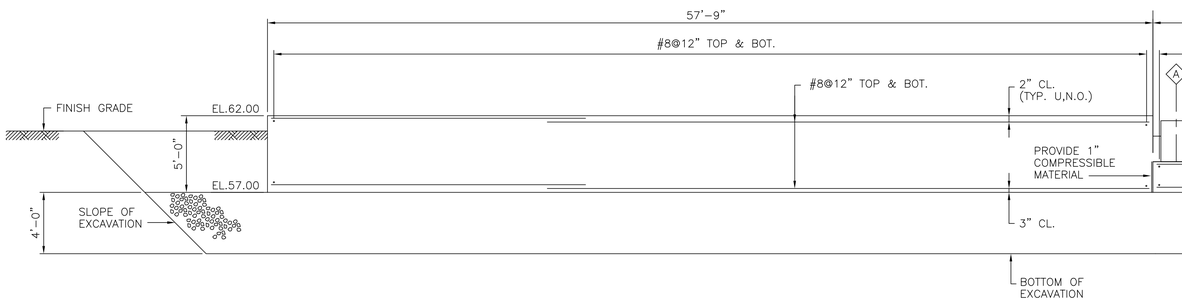

ELEVATION – TURBINE GENERATOR & AIR INTAKE STRUCTURE FOUNDATION

SCALE: 1/4"=1'-0"

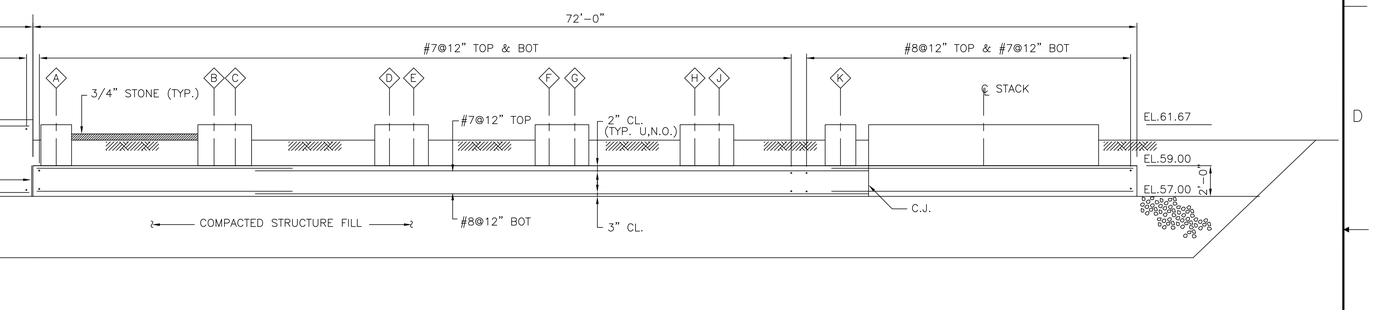

ELEVATION – SCR CATALYST AND EXHAUST STACK FOUNDATION

SCALE: 1/4"=1'-0"

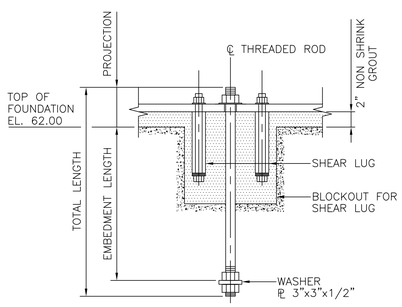

DETAIL A

SCALE: 1 1/2"=1'-0"

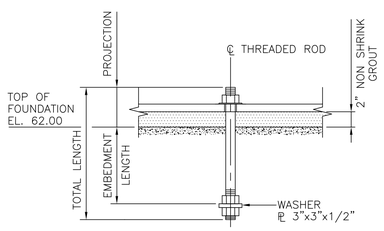

DETAIL B

SCALE: 1 1/2"=1'-0"

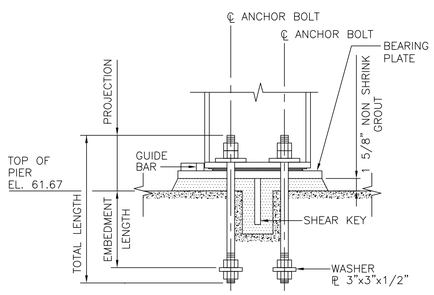

DETAIL C

SCALE: 1 1/2"=1'-0"

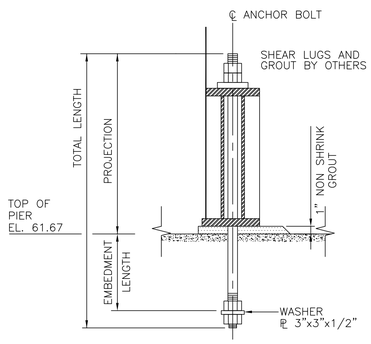

DETAIL D

SCALE: 1 1/2"=1'-0"

NOTES:

1. TURBINE GENERATOR AND AIR INTAKE STRUCTURE FOUNDATION – REFER TO GE DWG. No's.565224 & 565222 FOR ANCHOR BOLT AND SHEAR LUG LOCATIONS AND DETAILS.
2. SCR CATELYST AND EXHAUST STACK FOUNDATION – REFER TO DATA K DWG. No's. 04045035 & 04045036 FOR ANCHOR LOCATIONS AND DETAILS.

1 1/4" SEE RF1 #49

TURBINE GENERATOR									
TYPE	THREADED FASTENERS A449								
LOCATION	1A–1B	2A–2B	3A–3B	4A–4B	5A–5B	6A–6B	7A–7B	7A–7B*	8A–8B
DIAMETER	1 1/4"	1 1/4"	~~1 1/2"~~	1 1/4"	1 1/4"	1 1/4"	1 1/4"	1 1/4"	1 1/4"
EMBEDMENT LENGTH	12"	22"	22"	22"	12"	12"	22"	12"	12"
PROJECTION	6"	6"	6"	17"	17"	6"	6"	6"	6"
TOTAL LENGTH	21"	31"	31"	42"	32"	21"	31"	21"	21"
DETAIL	B	A	A	A	B	B	A	B	B

* THIRD BOLT IN CONNETION

ANCHOR BOLT DETAILS

SEE RF1 #49

NOTE:
~~ALL ANCHOR BOLTS, PLATES, WASHERS AND NUTS SHALL BE GALVANIZED.~~ EXPOSED PARTS SHALL BE PAINTED AFTER INSTALLATION OF EQUIPMENT.

SCR CATALYST & EXHAUST STACK		
TYPE	BOLTS A307	
LOCATION	A1–A4 TO K1–K4	STACK
DIAMETER	1"	1 1/4"
EMBEDMENT LENGTH	10"	10"
PROJECTION	8"	25"
TOTAL LENGTH	21"	38"
DETAIL	C	D

2	1/16/02	AS BUILT	MJG	SJC
1	10/6/00	ADD COMPRESSIBLE MAT'L, CJ & SECT MARK	MYM	WRM
0	9/29/00	ISSUED FOR CONSTRUCTION	JLM	WRM
0	9/29/00	ISSUED FOR CONSTRUCTION	JLM	WRM

Barton Malow Design/Construction Services

Barton Malow Company
27777 Franklin Road
Suite 800
Southfield, MI 48034

PB Power, Inc.
A Parsons Brinckerhoff Company
75 ARLINGTON STREET, BOSTON, MASS. 02116

PPL WALLINGFORD ENERGY LLC
11350 RANDOM HILL ROAD, SUITE 400
FAIRFAX, VIRGINIA 22030
Tel: (703) 293-2614 Fax: (703) 293-2659

WALLINGFORD, CT.

CTG & SCR/STACK FOUNDATIONS

DR. JLM
DES. WRM
CHK. FM
APPROVED DATE
PRINCIPAL IN CHARGE DATE

DRAWING NO. S3.1
REV 2
SHEET 1 OF 2

\\BOSC\CADD1\PP&L GLOBAL\25846_PEAK\POWER PLANT FOR CONSTRUCTION\FC STRUCTURAL\S3-1.DWG 01/10/02 11:40
C:\Documents and Settings\Control\Desktop\Drawings & References\PB Power\PB Power Structural\S03.01.dwg, 5/24/2013 10:41:28 AM, PDF Creator

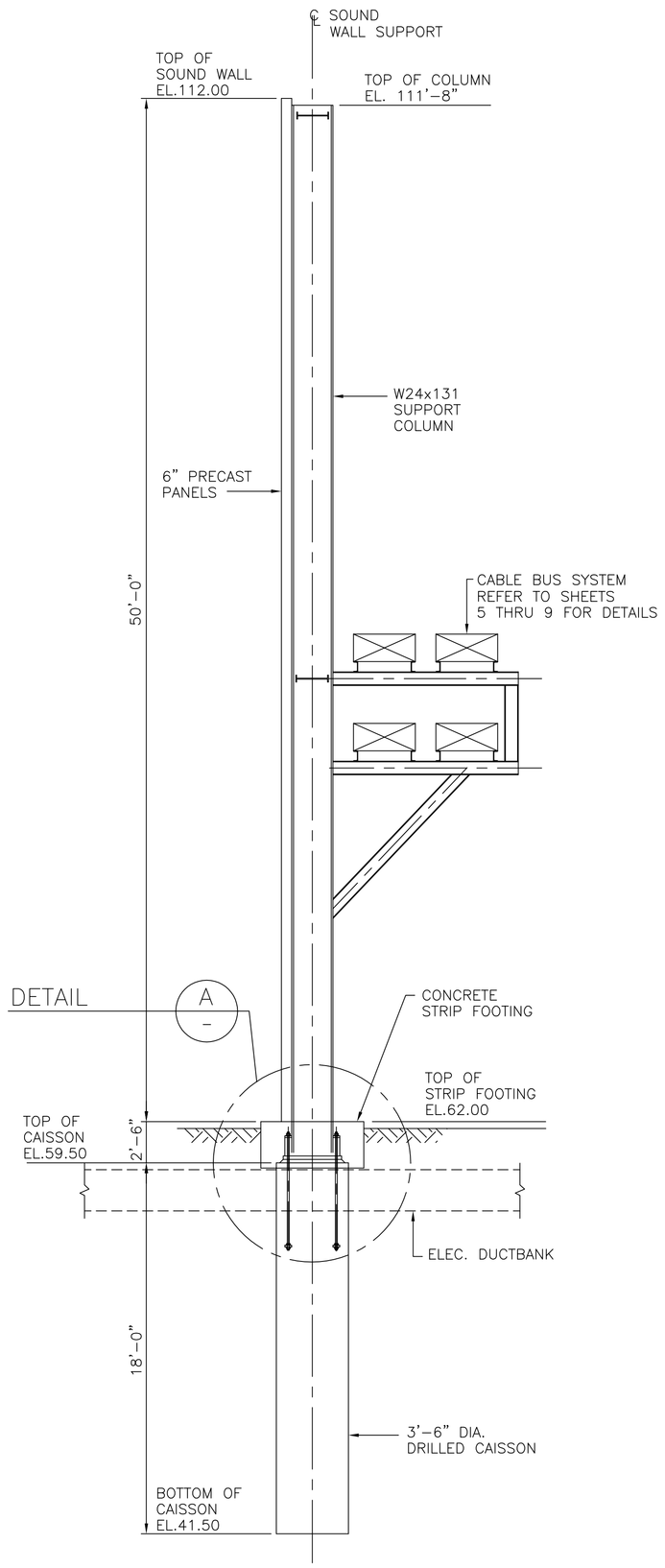

SOUND WALL SUPPORT
SCALE: 1/4"=1'-0"

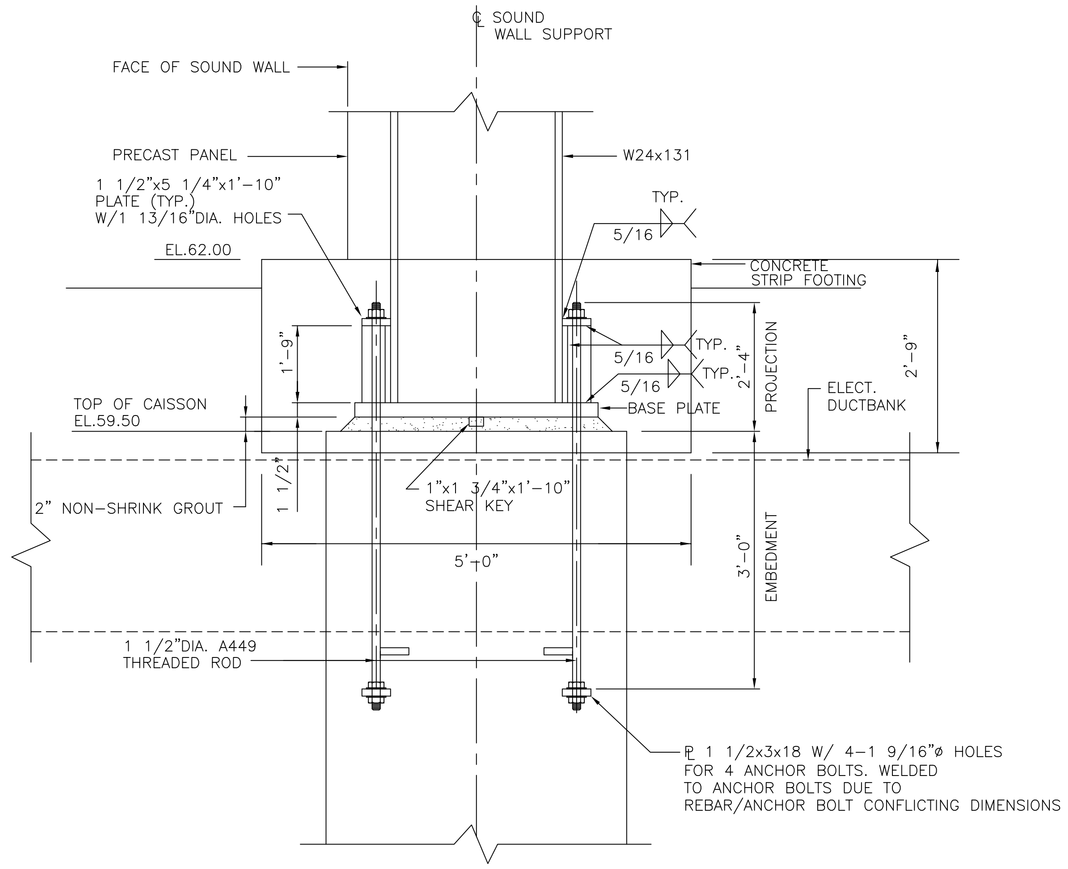

DETAIL A
SCALE: 1"=1'-0"

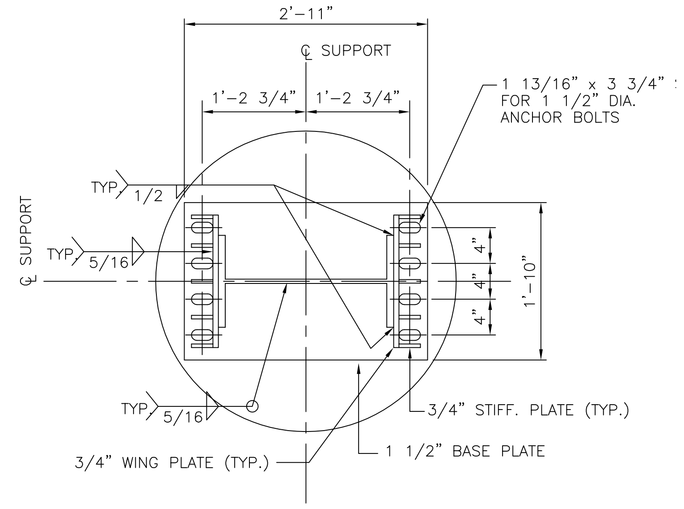

BASE PLATE DETAIL
SCALE: 1"=1'-0"

MAIN SOUND WALL BASE PLATE DETAIL

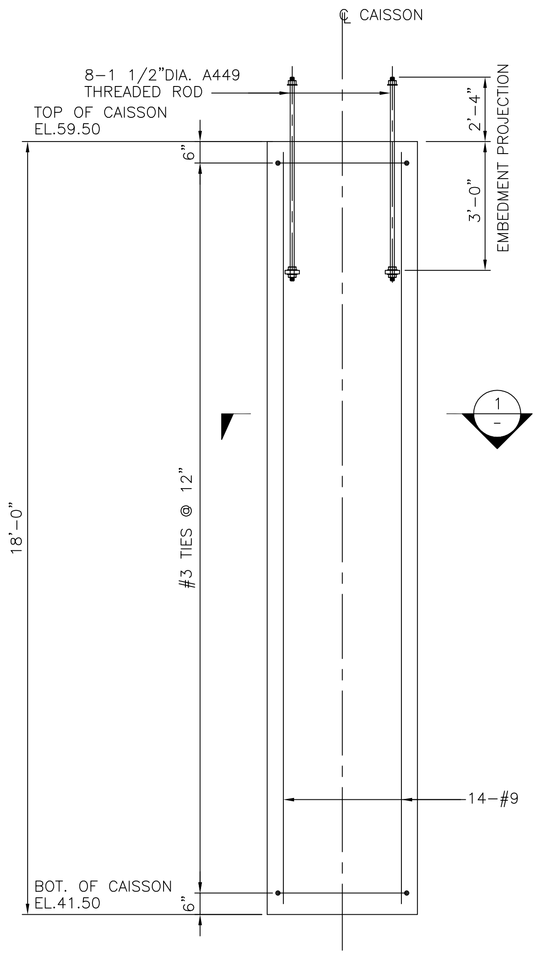

DRILLED CAISSON
SCALE: 1/2"=1'-0"

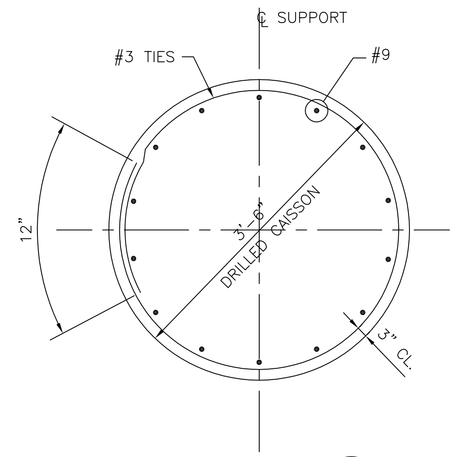

SECTION 1
SCALE: 1"=1'-0"

3	1/16/02	AS BUILT	MJG	SJC
		REMOVED CABLE BUS SUPPORT DETAIL & BASE PLATE NOTE		
		CHANGED ANCHOR BOLT SPACING		
2	1/5/01	REV. SOUND WALL SUPPORT SECT.	BJD	WRM
1	12/8/00	HOLD ON BASE PLATE REMOVED	BJD	WRM
0	10/6/00	ISSUED FOR CONSTRUCTION	JLM	WRM

Barton Malow
Design/Construction Services

Barton Malow Company
27777 Franklin Road
Suite 800
Southfield, MI 48034

PB Power, Inc.
A Parsons Brinckerhoff Company
75 ARLINGTON STREET, BOSTON, MASS. 02116

PPL WALLINGFORD ENERGY LLC
11350 RANDOM HILL ROAD, SUITE 400
FAIRFAX, VIRGINIA 22030
Tel: (703) 293-2614 Fax: (703) 293-2659

WALLINGFORD, CT.

ACOUSTICAL SOUND WALL

DR. JLM
DES. WRM
CHK. FM

APPROVED DATE
PRINCIPAL IN CHARGE DATE

DRAWING NO. S11.1
REV 3
SHEET 1 OF 10

\\BDSFPBP\PBPCDMMDN\PP&L PROJECTS\WALLINGFORD PEAKING\STRUCTURAL AS-BUILTS\S11-1.DWG 12/04/01 13:15

C:\Documents and Settings\Control\Desktop\Drawings & References\PB Power\PB Power Structural\S11.01.dwg, 5/24/2013 11:02:46 AM, PDF Creator

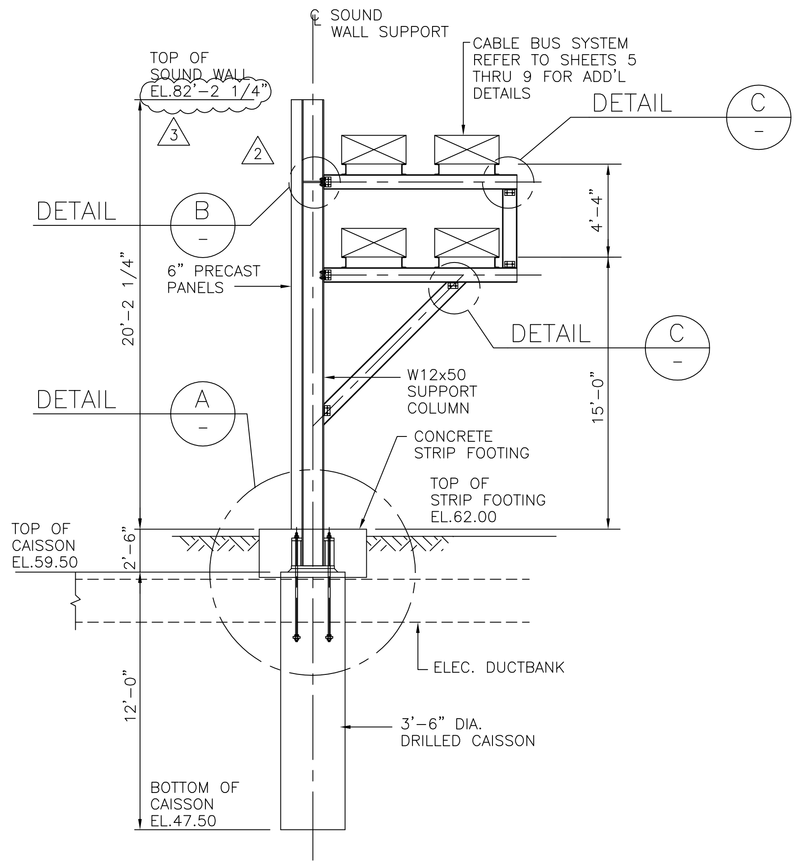

TRANSFORMER SOUND WALL SUPPORT

SCALE: 1/4"=1'-0"

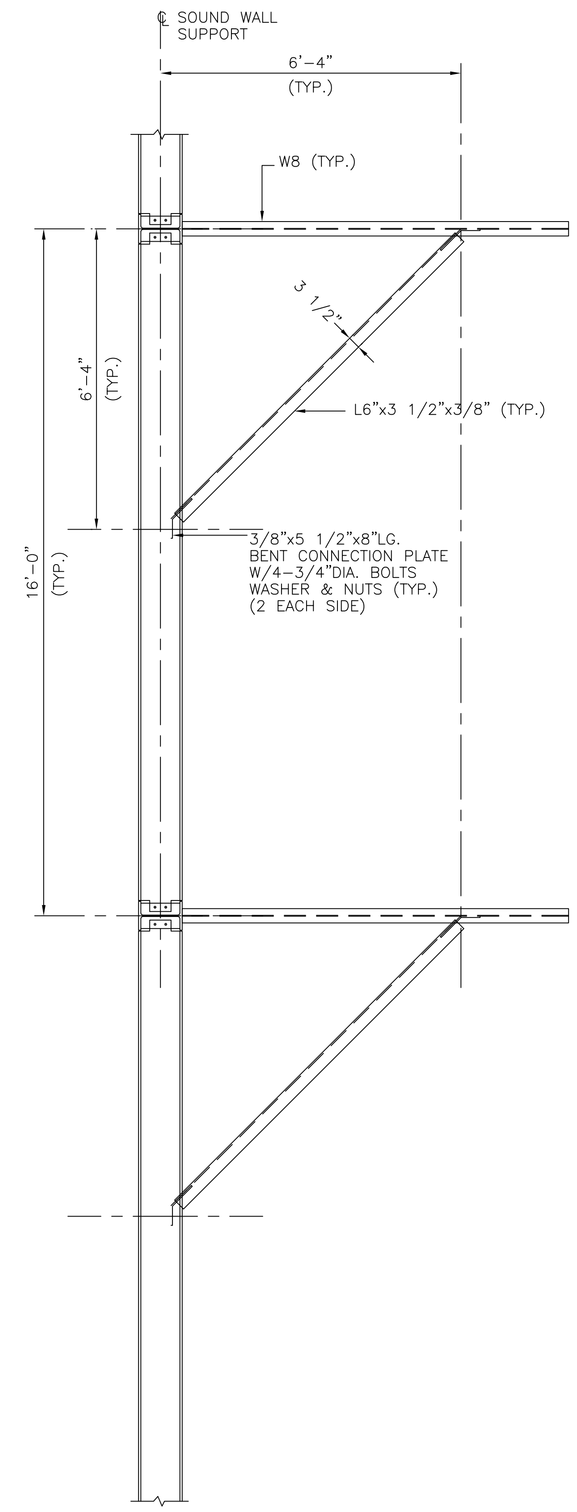

SECTION 1

SCALE: 1 1/2"=1'-0"

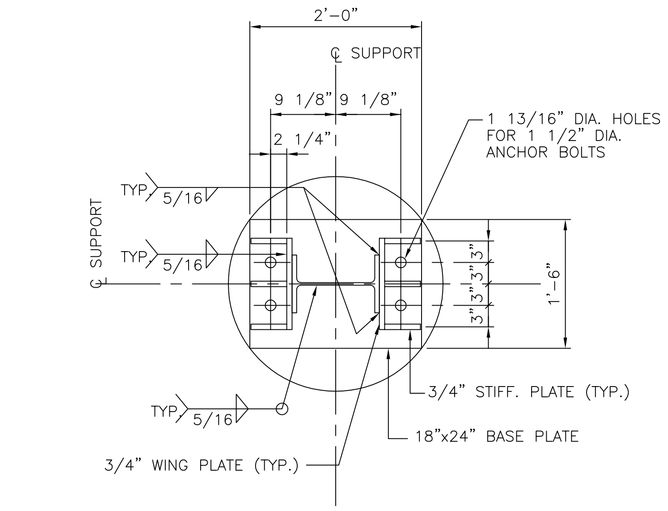

TRANSFORMER SOUND WALL BASE PLATE DETAIL

SCALE: 1"=1'-0"

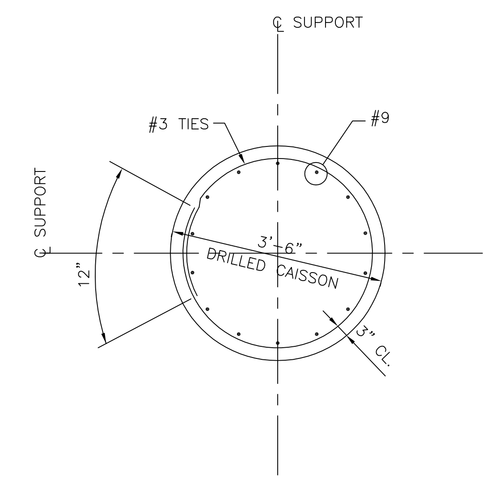

SECTION 2

SCALE: 1"=1'-0"

NOTE:
ANCHOR BOLTS, PLATES, NUTS AND WASHERS SHALL BE GALVANIZED

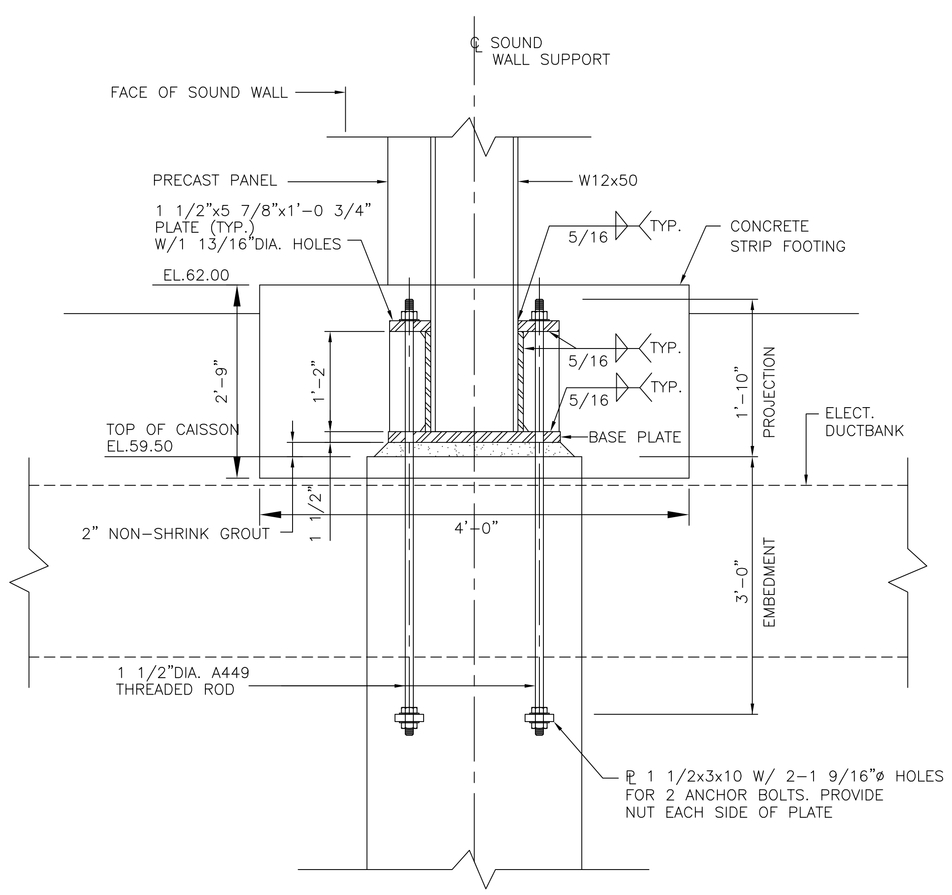

DETAIL A

SCALE: 1"=1'-0"

TRANSFORMER SOUND WALL BASE PLATE DETAIL

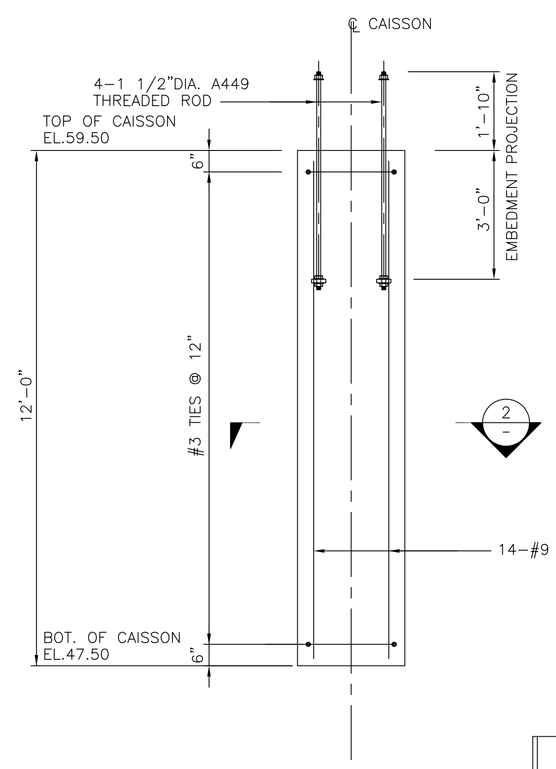

DRILLED CAISSON

SCALE: 1/2"=1'-0"

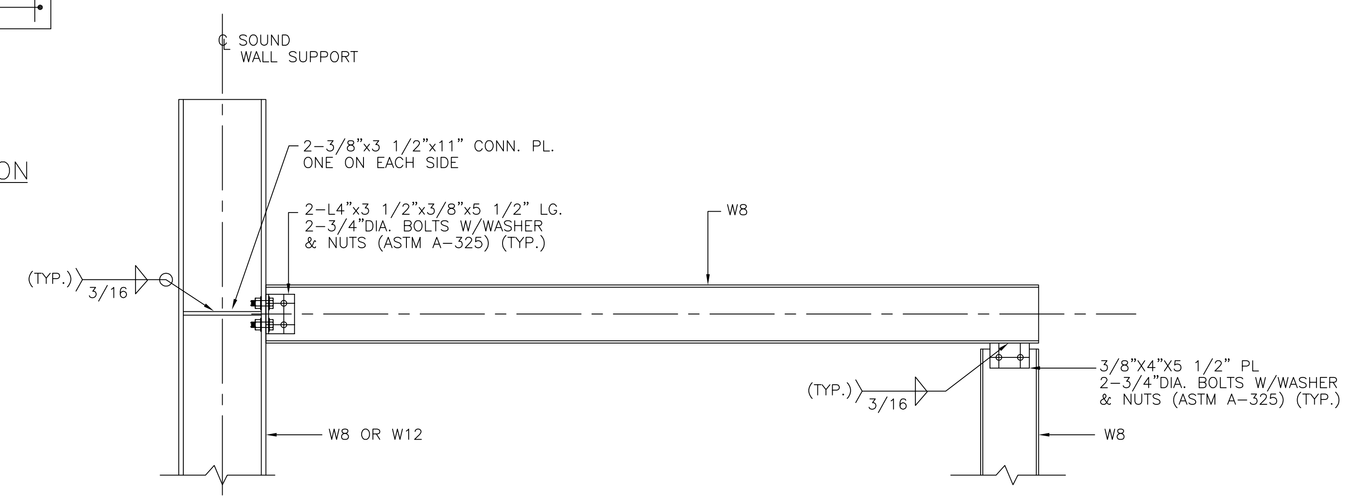

DETAIL B

SCALE: 1"=1'-0"

DETAIL C

SCALE: 1"=1'-0"

4	1/16/02	AS BUILT	MJG	SJC
3	1/19/01	DIM CHANGE AT WALL SUPPORT SECTION	BJD	WRM
		REMOVE HOLD, DELETE CABLE BUS SUPPORT DETAIL, MOD. DETAIL B, REVISE TRANS.-SOUND WALL		
2	1/5/01	SUPPORT DETAIL	BJD	WRM
1	12/8/00	CLARIFICATION ADDED	BJD	WRM
0	11/22/00	ISSUED FOR CONSTRUCTION	JLM	WRM

Barton Malow Design/Construction Services

Barton Malow Company
27777 Franklin Road
Suite 800
Southfield, MI 48034

PB Power, Inc.
A Parsons Brinckerhoff Company
75 ARLINGTON STREET, BOSTON, MASS. 02116

PPL WALLINGFORD ENERGY LLC
11350 RANDOM HILL ROAD, SUITE 400
FAIRFAX, VIRGINIA 22030
Tel: (703) 293-2614 Fax: (703) 293-2659

WALLINGFORD, CT.

ACOUSTICAL SOUND WALL

DR. JLM
DES. SJC
CHK. WRM

APPROVED DATE
PRINCIPAL IN CHARGE DATE

DRAWING NO. S11.3
REV 4
SHEET 3 OF 10

\\BOSC\CADD1\PP&L GLOBAL\25846_PEAK\POWER PLANT FOR CONSTRUCTION\FC STRUCTURAL\S11-3.DWG 01/15/02 15:42

Exhibit 2 – Construction Schedule

Wallingford Energy II Project Schedule

Task Name	Start Date	End Date
Development	**3/1/2014**	**9/15/2015**
Electrical Interconnection Study	3/1/2014	9/15/2015
Engineering to Support Permitting	6/1/2014	3/31/2015
Permitting	**2/4/2015**	**2/1/2016**
Air Permit	2/4/2015	12/15/2015
Siting Council	8/2015	2/1/2016
Local Site Plan & IWWC Approvals	6/1/2015	7/13/2015
Enginering & Design	**11/6/2015**	**2/16/2018**
Procurement Specific Engineering	4/8/2016	10/27/2016
Pre-Construction Engineering	11/6/2015	5/24/2016
Engineering Support during Construction	2/21/2017	2/16/2018
Major Equipment	**2/9/2016**	**11/1/2017**
Gas Turbine Procurement	2/9/2016	4/30/2016
Gas Turbines Delivered to Site	6/30/2017	6/30/2017
SCR - Bid/Award/Fabricate	6/1/2016	3/1/2017
GSU - Bid/Award/Fabricate	6/1/2016	10/31/2017
GSU Delivered to Site	11/1/2017	11/1/2017
Contractor Selection	**1/1/2016**	**6/1/2016**
Prepare & Issue RFP	1/1/2016	1/15/2016
Contractors Prepare Bids	1/16/2016	3/15/2016
Contract Negotiations	3/16/2016	5/15/2016
Issue Notice to Proceed	6/1/2016	6/1/2016
Construction	**11/1/2016**	**3/31/2018**
Contractor Procurement	11/1/2016	7/1/2017
Earthwork	3/23/2017	8/11/2017
Demolition/Relocation	4/3/2017	6/3/2017
Foundations	4/15/2017	8/11/2017
Structural	4/24/2017	7/24/2017
Mechanical	6/13/2017	11/13/2017
Piping	8/14/2017	2/9/2018
Electrical & Instrumentation	11/1/2017	2/16/2018
Startup & Comissioning	12/19/2017	3/15/2018
Performance Testing	3/16/2018	3/31/2018
Commercial Operations Date	**4/1/2018**	**4/1/2018**
Start of Capacity Commitment Period	**6/1/2018**	**6/1/2018**

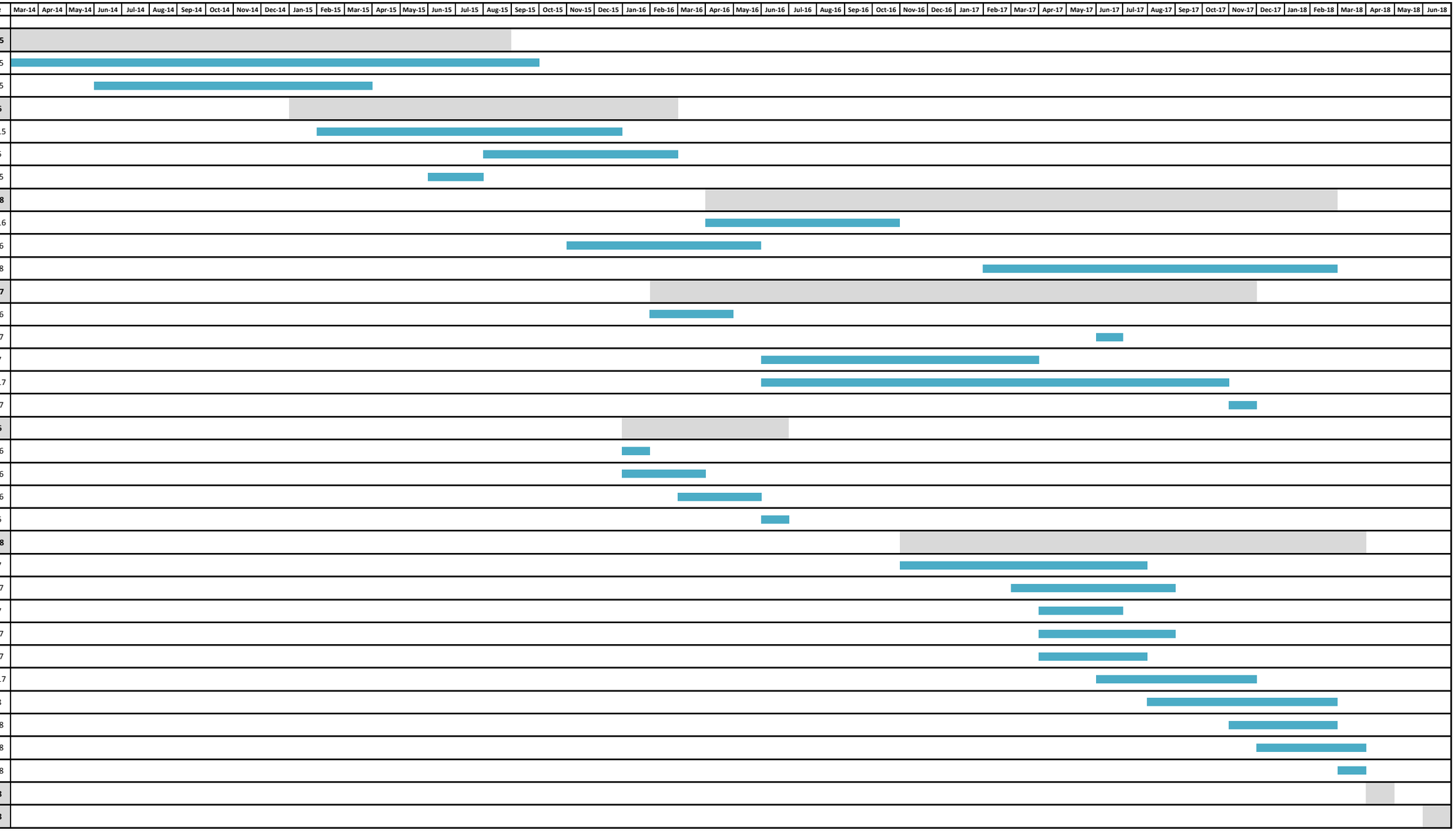

Exhibit 3 – Artist's Renderings

Rendering Location 1:

View from East Street at Allegheny Steel property looking southwest

Rendering Location 2:

View from near East Street and ThermoSpas Access Road looking southwest

Rendering Location 3:

View from East Street entrance to Wallingford Electric Department substation looking northwest

Appendix C: Stormwater Management

Exhibit 1 – Site Engineering and Stormwater Management Report

GODFREY HOFFMAN ASSOCIATES, LLC

PROFESSIONAL LAND SURVEYORS & CIVIL ENGINEERS

STORMWATER POLLUTION CONTROL PLAN

Facility Expansion Project Located at:

115 John Street
Wallingford, Connecticut

Prepared for: Wallingford Energy II, LLC
400 Chesterfield Center, Suite 110
St. Louis, MO 63017

Prepared by: Godfrey-Hoffman Associates, LLC
26 Broadway
North Haven, CT 06473

Submitted: September 6, 2016

26 Broadway North Haven, CT 06473 Phone: 203.239.4217 Fax: 203.234.2088
www.godfreyhoffman.com

(This page intentionally left blank)

Contents

1.0 SITE DESCRIPTION 1
1.1 Site Description 1
1.2 Estimated disturbed area 1
1.3 Existing Drainage conditions 1
1.4 Wetlands and Water Resources 3
2.0 CONSTRUCTION SEQUENCING 5
3.0 SEDIMENTATION AND EROSION CONTROLS 7
4.0 POST-CONTRUCTION STORMWATER MANAGEMENT 9
4.1 Post-Development Drainage Pattern 9
4.2 Stormwater outlet from retention pond to wetland 10
4.3 Conclusion 10
5.0 CONSTRUCTION INSPECTION AND MAINTENANCE 11
6.0 GOOD HOUSEKEEPING MEASURES 13
7.0 GENERAL PERMIT INCLUSIONS 13
8.0 STORMWATER EROSION AND SEDIMENT CONTROL INSPECTION LOG 15
FIGURE 1 17
FIGURE 2 19
CALCULATIONS 21
STORMWATER RUNOFF HYDROGRAPHS 23
WATER QUALITY 67
SITE DEVELOPMENT PLANS 71

(This page intentionally left blank)

1.0 SITE DESCRIPTION

1.1 Site Description

The Facility and proposed Project are located at 115 John Street in the Town of Wallingford, Connecticut, as shown on the Site Location Map included as Figure 1 (the "Leased Area"). Wallingford Energy, LLC leases from the Town of Wallingford approximately 8.5 acres that is currently used for the Facility. Pursuant to agreements with the Town of Wallingford, Wallingford Energy II, LLC ("WE II") intends to be a sublessee of the Project Site in connection with the Project. The physical footprint of the existing Facility covers approximately 4.3 acres of the 8.5 acre Project Site; the Project will utilize approximately 0.9 additional acres of land area on the overall property for the Project's two proposed generating units. Additionally, portions of the broader Facility site will be used for minor relocations of existing equipment and the addition of new Project equipment, such as a generator step-up transformer.

The Project Site is zoned industrial, designated by the Town of Wallingford as an Industrial District I-40. Land to the north, south and west of the Project Site lies within the industrial district and is mostly developed for industrial uses such as manufacturing, the Town of Wallingford wastewater treatment plant and the Town's capped landfill. Properties to the east of the Project Site, across East Street, are zoned residential. Landscaping, berms and screening walls on the Project Site and its parent tract help screen views from these non-industrial properties.

WE II proposes to add two combustion turbines ("CTs") and appurtenant equipment to the existing Wallingford Energy Facility, which will increase the Facility's overall power output. The primary motivation for this addition is to help satisfy capacity and reserve requirements. The two additional CTs, referred to as Units 6 and 7, will provide quick-start capacity in the Southwest Connecticut zone, a transmission-congested load pocket within the New England electrical system.

1.2 Estimated disturbed area

The total area for this project site is 4.3 acres. Of this area, 0.9± acres will be disturbed by these construction activities.

1.3 Existing Drainage conditions

The entire site consists of approximately 6.6 acres of drainage area. The existing site topography is relatively flat and pervious with most site stormwater running overland and infiltrating the ground surface. The existing Power plant consists of stormwater retention basin designed to contain the runoff volume from the impervious areas of the site during a 100-year storm event. The impervious areas on the site that contribute to this retention basin are the major roof structures and paved areas on the site. These areas total approximately 110,000 square feet.

The 15,900 square foot stormwater retention/recharge basin is designed to manage the runoff from 100 year, 24 hour rainfall event of 7.1 inches. This retention basin is located in the southwest portion of the leased area. Stormwater discharge from the new roof and paved areas on the site are collected in a closed stormwater drainage system, treated by an existing low-flow oil/water separator, and discharged into the stormwater retention area. The Oil/Water Separation System is an efficient contaminant separation system that removes and retains sediments and floating contaminants (oil, debris. and other pollutants) which have been washed into the collection system, storing them off-line to prevent resuspension. The recharge basin was sized and designed to have minimal discharge to the downstream receiving waters during 10 thru 100-year storm events. The outlet structure from the retention basin consists of a weir and pipe elbow to below the water surface which separates oils from the water to prevent oil from being discharged to the downstream receiving waters. The point of discharge for the retention basin is lined with rip-rap, which dissipates the velocity of the discharged water. The retention basin allows the suspended solids in the stormwater to settle out and drop to the bottom of the basin. The retention basin also serves as a recharge area. Relying only on gravity, the system has no moving parts and does not require mechanical assistance. The collected contaminants are retained by the system until they are removed by routine maintenance.

No inland wetlands or watercourses are located within the leased area of the site. However, a 2,500 square foot intermittent stream and wetland area is located on the far west portion of the larger parent tract. There are also no wetlands at the locations for construction equipment staging and laydown, and construction trailers.

Outside of the area leased by Wallingford Energy, the larger parent tract contains an intermittent stream enters the site via a 48-inch culvert, which conveys flow beneath an existing access roadway that services the industrial facilities located to the northwest of the site. A 15-inch culvert also discharges stormwater runoff from this access roadway to the intermittent stream. The stream leaves the site via a 48-inch culvert, which conveys flow beneath the existing Town of Wallingford pump station access roadway to the wetland areas located to the west of the site.

1.4 Wetlands and Water Resources

The ultimate receiving waterbody for this site is the Quinnipiac River located more than 650 feet west of all proposed construction activities. According to the 2014 State of Connecticut Integrated Water Quality Report and map entitled: "Water Quality Classifications Wallingford, CT" created by CT DEEP November 2015, the Quinnipiac River has a surface water quality classification of B while the surrounding area has a ground water quality classification of GB. The Quinnipiac River in this area is listed as an impaired waterbody for fish and other aquatic life and wildlife habitat as well as for fish consumption.

No equipment, facilities, or surface disturbance associated with the Project will occur within a wetland or watercourse, and no such disturbances will occur within the upland review area surrounding a wetland or watercourse. The only improvement to the existing stormwater retention system is the addition of a brick and mortar vee notch weir to the existing basin outlet structure which will accommodate the Project's stormwater flows without modifying the basin itself. The details of the new weir and the Facility stormwater calculations are provided hereinafter. The Town of Wallingford Inland Wetlands Commission stated during a meeting with WE II representatives that the proposed project would not result in a significant impact to wetlands and watercourses. Nonetheless, the proposed project meets the Commission's definition of a "regulated activity" since it involves the addition of a new surfaced area in excess of 10,000 square feet on the property. Therefore, WE II submitted an application for review by the Town Inland Wetlands and Watercourses Commission which was subsequently approved.

In addition to domestic water demand by the plant operations staff, the Project will utilize water to supplement emission control systems and to enhance generation efficiency and power output. The Facility is served by an existing water service connection to the Town of Wallingford municipal water system; the Project will use the existing infrastructure to meet its water needs without additional expansions. The purchase of water from the Town is governed by an existing utility services agreement.

Only domestic wastewater from the Facility and Project is sent to the Town of Wallingford's Wastewater Treatment Plant. The incremental staff addition of one employee for the Project represents a negligible increase in wastewater infrastructure demand.

2.0 CONSTRUCTION SEQUENCING

1. Flag limits of construction. Schedule pre-construction meeting with representatives of the owner, contractor, engineer and local authority.
2. Hold pre-construction meeting prior to any site disturbance. Review erosion control plan and discuss scheduling of site inspections during construction activities.
3. Install construction entrance.
4. Install perimeter erosion and sedimentation controls in accordance with the E&S control plan.
5. Begin excavation and construction of landscape berms. Establish sub-grade elevations for topsoil areas and roadways as required and prepare building and turbine pads.
6. Begin building and turbine construction.
7. Install underground utilities (sanitary, water service, storm drain system and other utilities) to within 5 feet of the building.
8. Prepare sub-base, slopes, driveway areas and other areas of disturbance for final grading.
9. Install driveway area base materials and compact.
10. Place topsoil where required. Complete perimeter landscaping.
11. Upon substantial completion of the building, complete the balance of the site work and stabilization of all other disturbed areas. Install first course of paving.
12. When all other work has been completed, repair and sweep all paved areas for the final course of paving. Inspect the drainage system and clean as needed.
13. Install final course of pavement.
14. After site is stabilized remove temporary erosion and sediment controls.

3.0 SEDIMENTATION AND EROSION CONTROLS

The disturbance caused by removing topsoil and regrading the site will be appropriately managed and designed to minimize the loss of soil from the disturbed areas and to minimize the effect of sediment being carried away from the site with runoff via the drainage systems. Best Management Practices (BMPs) for stormwater management at construction sites have been incorporated into the site design for drainage and erosion/sedimentation control and as required for obtaining approvals from the Town of Wallingford, Planning and Zoning Commission and Inland Wetlands and Watercourses Commission. The following sections describe the construction and post-construction BMPs that are incorporated into the site plans. The soil erosion and sediment control plans and details are provided in Site Plans.

Miscellaneous Erosion Controls: A variety of measures will be used to minimize the impacts of erosion and sedimentation on adjacent property, undisturbed site areas, and receiving wetlands and water bodies. Erosion control measures, such as silt fences and hay bales will be placed around the perimeter of the construction area and all disturbed areas. Catch basins will be appropriately equipped with a siltsack to reduce solids. Stabilization seeding will be established after final grading is completed. After construction is completed, permanent stabilization vegetation will be planted on all exposed slopes. As needed during construction, and following site stabilization, sediment from the basin and control structures will be removed.

Soil stockpiles will have erosion and sedimentation control measures installed around them. These control measures include silt fences and straw bale dikes. When possible, the fences will be installed parallel to ground contours to avoid large concentrations of flow. During construction, straw bales will be placed at the limit of work where steep slopes exist in order to protect the down slope areas from sediment deposition. Silt fences and/or hay bales will be installed around or filtration fabric will be placed within the inlets of drainage structures such as catch basins to minimize sediment transport to the stormwater basins.

When the site's final grade has been established, permanent vegetation will be planted on the disturbed areas.

Post-Construction Measures: After construction is completed, all accumulated sediment in the stormwater management retention basin, the Oil/Water Separation System, and catch basins will be removed. Other stormwater management systems that will remain from the construction phase are earthen berms, outlet protection, and the establishment and maintenance of permanent vegetation.

4.0 POST-CONTRUCTION STORMWATER MANAGEMENT

4.1 Post-Development Drainage Pattern

The footprint of the proposed additions and associated grading will be located outside the limits of the inland wetlands and 50-foot upland regulated areas. Silt fence will be installed down-gradient of proposed major work areas (i.e., down-gradient of the proposed toe of slope). The silt fence establishes the maximum limit of work during construction operations as well as protects the buffer area, intermittent stream and associated wetlands from impacts associated with erosion and sedimentation as well as providing water quality protection.

The stormwater management system for the facility has been designed to reduce impacts associated with post-construction storm events. The existing stormwater retention basin will remain unchanged.

The roof drains from the new buildings and additions are proposed to be piped to the ground and allowed to sheet flow overland. The surface drainage from paved areas will also sheet flow overland to existing catch basins and the existing retention basin.

The northerly portion of the site outside of the limits of the proposed turbines construction will be planted as shown on the Site Plans to buffer adjacent properties. Overland flow from this area will be directed toward the existing rip-rap swale and downstream receiving waters. These drainage alterations will have an insignificant overall effect on the hydrology of the wetland and associated stream. This is due to the fact that the surface water hydrogeology for the wetland and stream are provided primarily by stormwater runoff from within a large watershed area upstream of the project site.

The existing retention basin is proposed to remain undisturbed with only a minor change to the existing outlet structure being proposed to control the increase in stormwater runoff. The existing outlet has a broad crested wier which controls the outflow of stormwater. A portion of the existing wier is proposed to be converted to a vee type wier. See figure 2 for detail of proposed revision. The results of the runoff analysis for peak run-off discharge from the site during different storm frequencies are listed below. Discharge hydrographs and calculation summaries are included the report.

4.2 Stormwater outlet from retention pond to wetland

Existing Condition Stormwater Runoff vs. Proposed Condition Stormwater Runoff			
Storm Event	Runoff Flow Rate (cfs)		
	Existing Conditions	Proposed Conditions	Difference
2 Year	0.00	0.00	0.00
10 Year	0.33	0.30	-0.03
25 Year	0.83	0.75	-0.08
50 Year	1.71	1.66	-0.05
100 Year	3.58	3.29	-0.29

4.3 Conclusion

Since direct impacts to the wetlands have been avoided and indirect impacts to this area have been mitigated through incorporation of standard erosion and sedimentation control measures, no significant adverse effects to the wetland or its functional values are anticipated from the planned additions to this facility.

5.0 CONSTRUCTION INSPECTION AND MAINTENANCE

The construction contractor will perform inspections on all of the stormwater management systems to ensure they are functioning properly. In any instance of non-compliance, corrective measures will be implemented. Inspections will be performed at a minimum of once every seven calendar days or within 24 hours of the end of a storm event that produces 0.5 inches or more of precipitation. A blank Stormwater Erosion and Sediment Control Inspection Log is provided. The stormwater management systems inspections and maintenance to be performed by the contractor include the following:

- The storm drains and grass swales will be inspected periodically for accumulated sediment. Built up sediment shall be removed from silt fences when it has reached the lesser of one third of the height of the fence or six inches in height.

- Silt fences shall be inspected for depth of sediment, tears in the fabric, and fabric attachment to posts. Posts shall also be inspected to ensure that they are firmly set into the ground.

- Locations where vehicles enter or exit the site shall be inspected for evidence of off-site sediment tracking. Excessive sediment accumulated on nearby roads shall be swept up.

- Temporary and permanent seeding shall be inspected during its establishment to check for insufficient growth, if required, remedial action shall be undertaken to stabilize the surface.

- Dikes, berms, and outlet stone rip rap shall be inspected for washouts or movement and repaired as required. Dikes or berms susceptible to erosion shall be reinforced with stone. Any rip rap experiencing movement or washout shall be removed and replaced individually in response to the observed runoff flow patterns. Large stones shall be incorporated into the structure for anchoring and support when needed.

- Stone or sand filter traps used for storm inlet protection or filtering dikes shall be inspected and replaced when sediment impedes the effective functioning of the device.

- The stormwater retention/recharge basin shall be inspected for sediment accumulation and structural damage. Remove sediment accumulation during dry periods when it exceeds one foot in depth. Make the necessary repairs to stabilize the basin soil berm walls and insure Structural integrity.

- The Oil/Water Separation System shall be inspected for sediment accumulation. Per manufacturer's recommendations, this system will be cleaned when sediment depth has accumulated to 2 feet in the bottom of either structure or when visual inspection shows a large accumulation of debris or oil.

- In the event of winter shutdown, inspections and repairs to sediment and erosion controls shall continue. If construction continues during winter months, snow shall be cleared and piled so as not to interfere with sediment and erosion controls and drainage swales. Ruts created by vehicle traffic over softened or unstable soil shall be leveled on a daily basis and mixed with drier soil to stabilize the surface grade.

At a minimum, all of the following items shall be repaired and/or rectified as soon as practicable after they are discovered:

- Erosion channels formed on slopes, in swales, or around structures;
- Hay/straw bale dikes with broken strings or with less than two stakes per bale;
- Deteriorated silt fences;
- Inlet structures requiring cleaning;
- All conveyances or inlet structures not operating as in their design conditions; and
- All stormwater detention/retention structures, and settling basin containing sediment, vegetation, and foreign debris.

Like any system that collects pollutants, the Oil/Water Separation System must be maintained for continued effectiveness. Maintenance is a simple procedure, and is performed using a vacuum truck or similar equipment. Access to the contaminant storage is available through manhole covers in each structure, and the entire floor of each structure should be visible from the surface. This allows the entire cleaning process to be performed and inspected without entering the structures. During maintenance, the storage manhole is completely emptied and cleaned. The water from the primary manhole is used to recharge the storage manhole, and the sediments are then removed from the primary structure.

Based on the results of the inspections, the description of potential sources and pollution prevention measures identified in this plan shall be revised as appropriate as soon as practicable after such inspection. Such modifications shall provide for timely implementation of any changes to the site within 24 hours and implementation of any changes to this plan within 3 calendar days following the inspection. This plan shall be revised and the site controls updated in accordance with sound engineering practices, the guidelines, and the General Permit.

A report summarizing the scope of the inspection, name(s) and qualifications of personnel making be inspection, the date(s) of the inspection, major observations relating to the implementation of this plan, and actions taken shall be made and retained as part of this plan for at least three years after the date of inspection. The report shall be signed by the permittee, or his authorized representative.

6.0 GOOD HOUSEKEEPING MEASURES

Trash, garbage, rubbish and other refuse will be routinely collected in suitable containers, transported off-site and disposed of in an acceptable manner.

During construction leaks or spills of hydraulic oils, lubricating oils, fuel oils, gasoline or other engine fluids will be contained upon detection using oil sorbent materials and other methods, as appropriate. Repairs or appropriate maintenance shall be performed in the designated maintenance area. When repair or maintenance procedures are performed in the open, work shall be done in such a manner so as to minimize spillage of hydraulic and engine fluids onto the ground.

Materials handled during operations shall be transferred directly to/from the vehicles at appropriate unloading areas. The potential for stormwater to contact handled materials will be minimized. A supply of absorbent materials shall be readily accessible at the site 24 hours a day to help contain any spills.

7.0 GENERAL PERMIT INCLUSIONS

This Stormwater Pollution Control Plan (SPCP) is prepared to comply with the requirements for the General Permit for Stormwater Discharges (GPSD) from Construction Activities. Also to be considered part of the SPCP are the proposed construction plans, special provisions, and the Connecticut Department of Transportation's "Standard Specifications for Roads, Bridges and Incidental Construction" (Form 817) including supplements thereto and the 2002 Connecticut Guidelines for Soil Erosion and Sediment Control and 2004 Stormwater Quality Manual.

8.0 STORMWATER EROSION AND SEDIMENT CONTROL INSPECTION LOG

Instructions:

"Qualified personnel (provided by the permitee) shall inspect disturbed areas of the construction activity that have not been finally stabilized, structural control measures, and locations where vehicles enter or exit the site at least once every seven calendar days and within 24-hours of the end of a storm that is 0.1 inches or greater. Where sites have been temporarily or finally stabilized, such inspection shall be conducted at least once every month for three months."

Disturbed areas and areas used for storage of materials that are exposed to precipitation shall be inspected for evidence of, or the potential for, pollutants entering the drainage system. Erosion and sediment control measures shall be observed to ensure that they are operating correctly. Where discharge locations or points are accessible, they shall be inspected to ascertain whether erosion control measures are effective in preventing significant impacts to receiving waters. Locations where vehicles enter or exit the site shall be inspected for evidence of off-site sediment tracking.

Date: _____ **Time:** _____

Inspector: _____ **Signature:** _____

Description of Erosion/Sedimentation Control Measures:

- The storm drains and grass swales will be inspected periodically for accumulated sediment. Built up sediment shall be removed from silt fences when it has reached the lesser of one-third of the height of the fence or six inches in height.

- Silt fences shall be inspected for depth of sediment, tears in the fabric, and fabric attachment to posts. Posts shall also be inspected to ensure that they are firmly set into the ground.

- Locations where vehicles enter or exit the site shall be inspected for evidence of off-site sediment tracking. Excessive sediment accumulated on nearby roads shall be swept up.

- Temporary and permanent seeding shall be inspected during its establishment to check for insufficient growth. If required, remedial action shall be undertaken to stabilize the surface.

- Dikes, berms, and outlet stone rip rap shall be inspected for washouts or movement and repaired as required. Dikes or berms susceptible to erosion shall be reinforced with stone. Any rip rap experiencing movement or washout shall be removed and replaced individually in response to the observed runoff flow patterns. Large stones shall be incorporated into the structure for anchoring and support when needed.

- Stone or sand filter traps used for storm inlet protection or filtering dikes shall be inspected and replaced when sediment impedes the effective functioning of the device.

- The stormwater retention/recharge basin shall be inspected for sediment accumulation and structural damage. Remove sediment accumulation during dry periods when it exceeds one foot in depth. Make the necessary repairs to stabilize the basin soil berm walls and insure structural integrity.

- The Oil/Water Separation System shall be inspected for sediment accumulation. Per manufacturer's recommendations, this system will be cleaned when sediment depth has accumulated to 2 feet of sediment in either structure.

Are the Control Measures Functioning Properly? Yes _____ No _____
Observations/Corrective Actions:

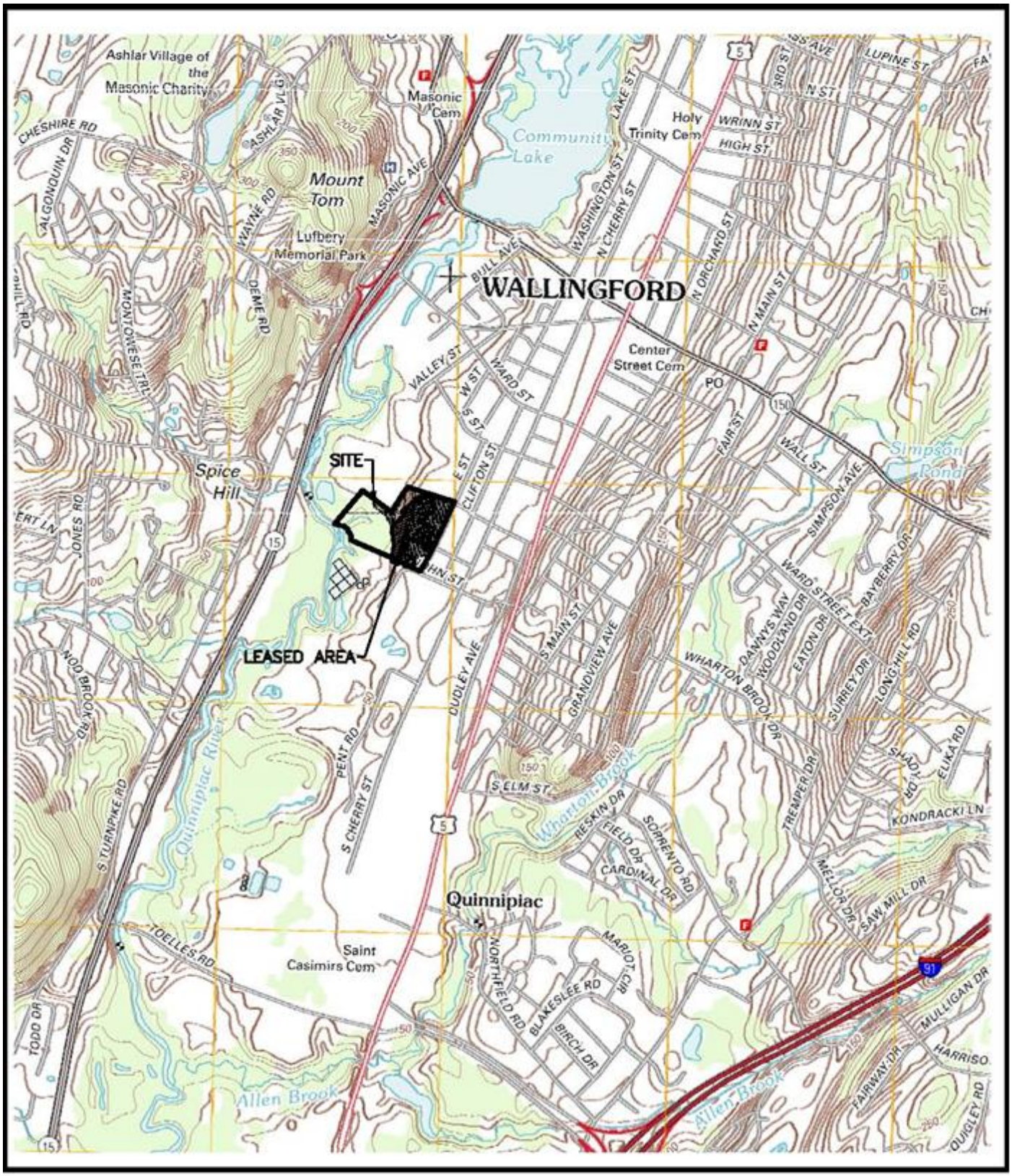

GODFREY HOFFMAN ASSOCIATES, LLC
PROFESSIONAL LAND SURVEYORS & CIVIL ENGINEERS
26 BROADWAY NORTH HAVEN, CT 06473
TEL: 203.239.4217 FAX: 203.234.2068 WWW.GODFREYHOFFMAN.COM

LOCATION MAP

WALLINGFORD ENERGY II, LLC

DRAWN BY:	MP
CHECKED BY:	JR
SCALE:	1"=2000'
PROJECT:	15-011
DATE:	6-2-2015

FIGURE 1

FIGURE 2

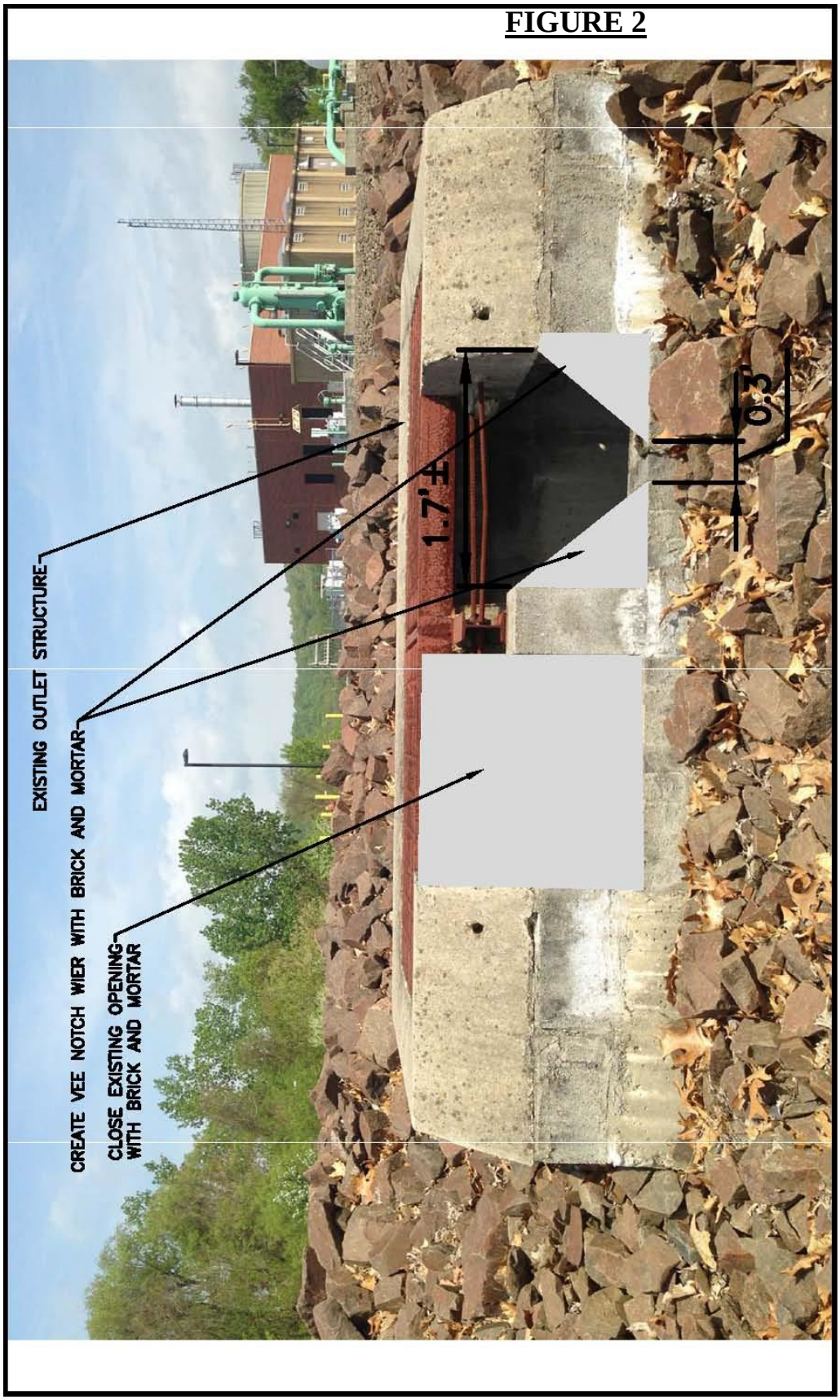

DRAWN BY:	MP
CHECKED BY:	JR
SCALE:	1"=1'
PROJECT:	15-011
DATE:	8-2-2015

OUTLET STRUCTURE

WALLINGFORD ENERGY II, LLC

FIGURE 2

GODFREY/HOFFMAN ASSOCIATES, LLC
PROFESSIONAL LAND SURVEYORS & CIVIL ENGINEERS
26 BROADWAY NORTH HAVEN, CT 06473
TEL: 203.239.4217 FAX: 203.234.2088 WWW.GODFREY-HOFFMAN.COM

CALCULATIONS

STORMWATER RUNOFF HYDROGRAPHS

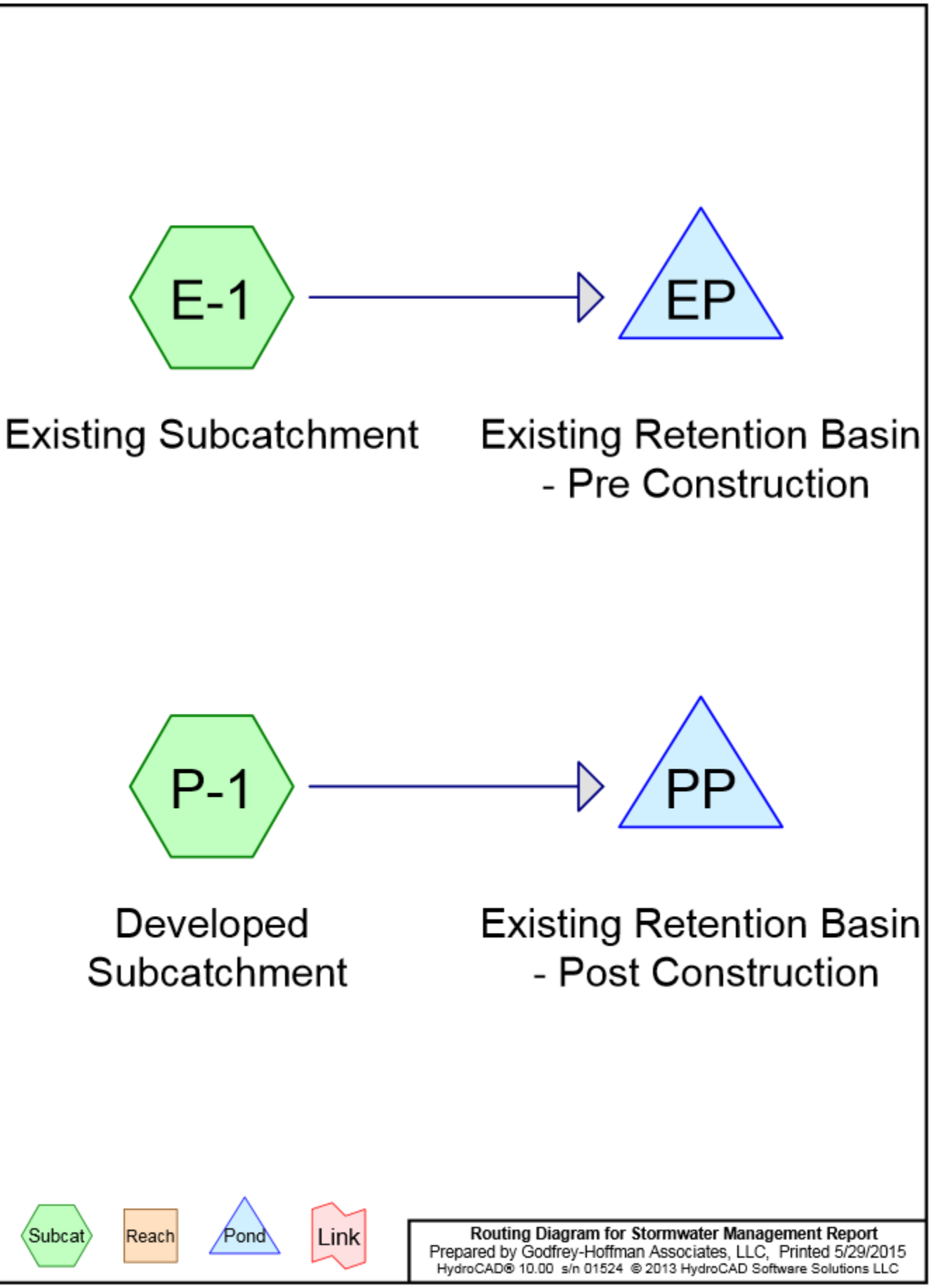
E-1
EP
Existing Subcatchment
Existing Retention Basin - Pre Construction
P-1
PP
Developed Subcatchment
Existing Retention Basin - Post Construction
Subcat
Reach
Pond
Link
Routing Diagram for Stormwater Management Report
Prepared by Godfrey-Hoffman Associates, LLC, Printed 5/29/2015
HydroCAD® 10.00 s/n 01524 © 2013 HydroCAD Software Solutions LLC

Time span=0.00-24.00 hrs, dt=0.05 hrs, 481 points
Runoff by SCS TR-20 method, UH=SCS, Split Pervious/Imperv. UI as Pervious
Reach routing by Stor-Ind+Trans method - Pond routing by Stor-Ind method

Subcatchment E-1: Existing Runoff Area=290,375 sf 14.97% Impervious Runoff Depth>1.55"
Tc=15.0 min CN=77/98 Runoff=8.67 cfs 37,416 cf

Subcatchment P-1: Developed Runoff Area=290,375 sf 14.97% Impervious Runoff Depth>1.66"
Tc=15.0 min CN=79/98 Runoff=9.38 cfs 40,056 cf

Pond EP: Existing Retention Basin - Pre Peak Elev=54.50' Storage=37,402 cf Inflow=8.67 cfs 37,416 cf
Outflow=0.00 cfs 0 cf

Pond PP: Existing Retention Basin - Post Peak Elev=54.72' Storage=40,042 cf Inflow=9.38 cfs 40,056 cf
Outflow=0.00 cfs 0 cf

Total Runoff Area = 580,750 sf Runoff Volume = 77,472 cf Average Runoff Depth = 1.60"
85.03% Pervious = 493,800 sf 14.97% Impervious = 86,950 sf

Summary for Subcatchment E-1: Existing Subcatchment

Runoff = 8.67 cfs @ 12.21 hrs, Volume= 37,416 cf, Depth> 1.55"

Runoff by SCS TR-20 method, UH=SCS, Split Pervious/Imperv. UI as Pervious, Time Span= 0.00-24.00 hrs, dt= (
Type III 24-hr 2-Year Rainfall=3.30"

	Area (sf)	CN	Description
*	39,100	98	Roads - Paved
*	4,375	98	Bldg - roof to drain system
*	2,125	89	Bldg - roof to overland
*	100,100	81	Yard - pervious surface
	129,175	74	>75% Grass cover, Good, HSG C
*	15,500	74	Retention Basin - Stone
	290,375	80	Weighted Average
	246,900	77	85.03% Pervious Area
	43,475	98	14.97% Impervious Area

Tc (min)	Length (feet)	Slope (ft/ft)	Velocity (ft/sec)	Capacity (cfs)	Description
15.0					**Direct Entry, Direct Entry - Assumed**

Subcatchment E-1: Existing Subcatchment

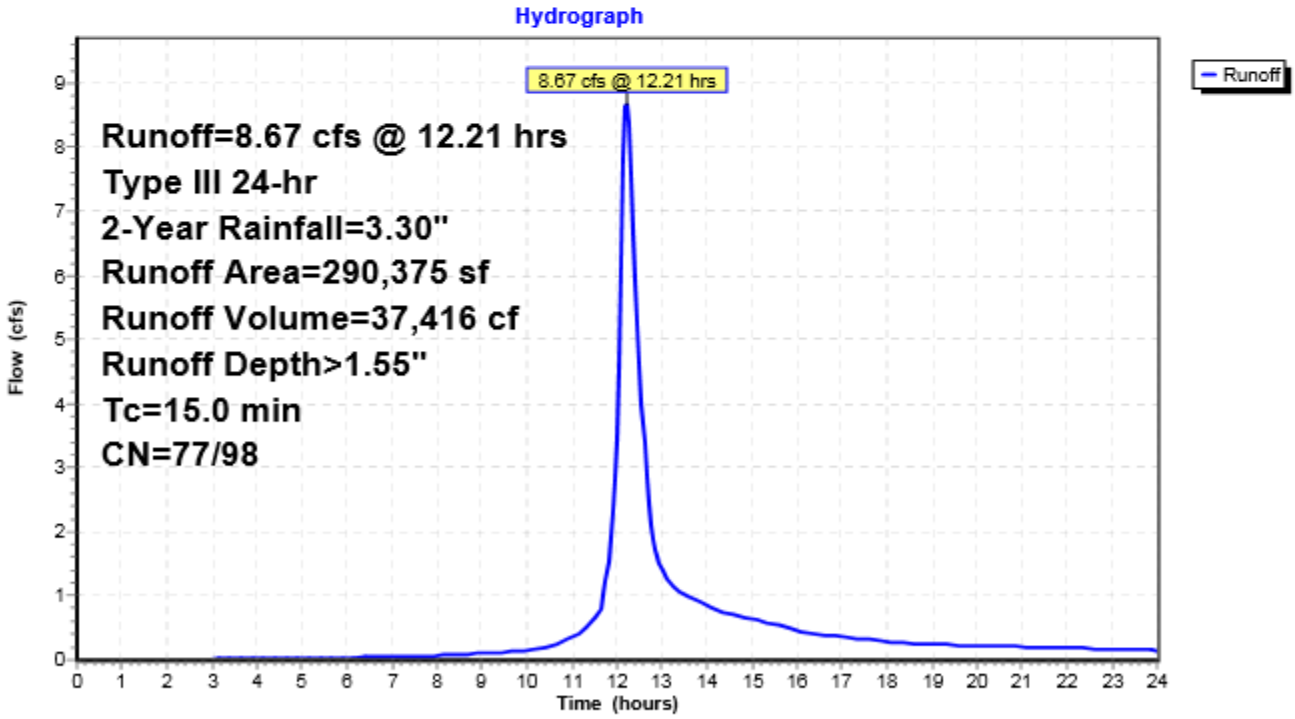

Summary for Subcatchment P-1: Developed Subcatchment

Runoff = 9.38 cfs @ 12.21 hrs, Volume= 40,056 cf, Depth> 1.66"

Runoff by SCS TR-20 method, UH=SCS, Split Pervious/Imperv. UI as Pervious, Time Span= 0.00-24.00 hrs, dt= (
Type III 24-hr 2-Year Rainfall=3.30"

	Area (sf)	CN	Description
*	39,100	98	Roads - Paved
*	4,375	98	Bldg - roof to drain system
*	4,724	89	Bldg - roof to overland
*	124,949	81	Yard - pervious surface
	89,727	74	>75% Grass cover, Good, HSG C
*	15,500	74	Retention Basin - Stone
	12,000	98	Unconnected pavement, HSG C
	290,375	82	Weighted Average
	246,900	79	85.03% Pervious Area
	43,475	98	14.97% Impervious Area

Tc (min)	Length (feet)	Slope (ft/ft)	Velocity (ft/sec)	Capacity (cfs)	Description
15.0					**Direct Entry, Direct Entry - Assumed**

Subcatchment P-1: Developed Subcatchment

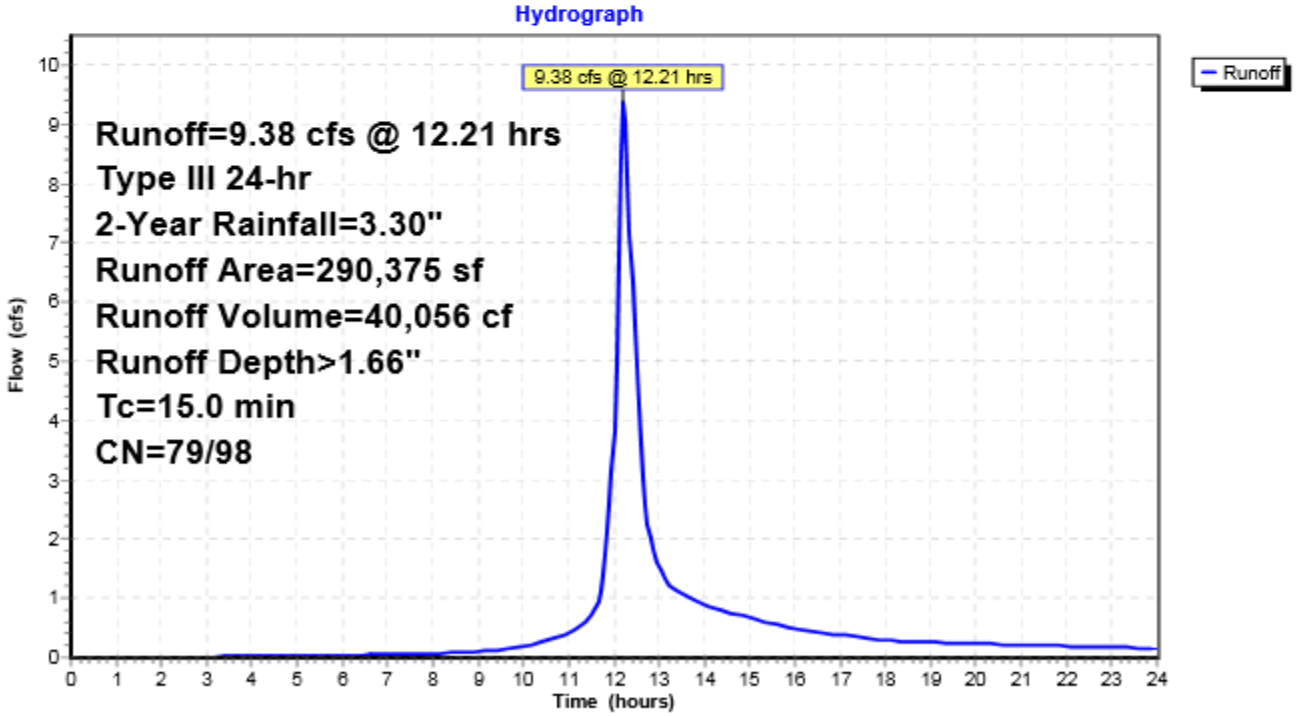

Summary for Pond EP: Existing Retention Basin - Pre Construction

Inflow Area = 290,375 sf, 14.97% Impervious, Inflow Depth > 1.55" for 2-Year event
Inflow = 8.67 cfs @ 12.21 hrs, Volume= 37,416 cf
Outflow = 0.00 cfs @ 0.00 hrs, Volume= 0 cf, Atten= 100%, Lag= 0.0 min
Primary = 0.00 cfs @ 0.00 hrs, Volume= 0 cf

Routing by Stor-Ind method, Time Span= 0.00-24.00 hrs, dt= 0.05 hrs
Peak Elev= 54.50' @ 24.00 hrs Surf.Area= 11,909 sf Storage= 37,402 cf

Plug-Flow detention time= (not calculated: initial storage exceeds outflow)
Center-of-Mass det. time= (not calculated: no outflow)

Volume	Invert	Avail.Storage	Storage Description
#1	50.40'	84,582 cf	**Custom Stage Data (Prismatic)**Listed below

Elevation (feet)	Surf.Area (sq-ft)	Inc.Store (cubic-feet)	Cum.Store (cubic-feet)
50.40	0	0	0
50.50	4,930	247	247
51.00	7,380	3,078	3,324
52.00	8,770	8,075	11,399
53.00	10,000	9,385	20,784
54.00	11,260	10,630	31,414
55.00	12,550	11,905	43,319
56.00	13,890	13,220	56,539
57.00	15,450	14,670	71,209
58.00	1,684	8,567	79,776
58.50	17,540	4,806	84,582

Device	Routing	Invert	Outlet Devices
#1	Primary	52.22'	**18.0" Round RCP_Round 18"** L= 563.0' RCP, square edge headwall, Ke= 0.500 Inlet / Outlet Invert= 52.22' / 46.24' S= 0.0106 '/' Cc= 0.900 n= 0.013 Concrete sewer w/manholes & inlets, Flow Area= 1.77 sf
#2	Device 1	58.17'	**75.0" x 20.0" Horiz. Orifice/Grate** C= 0.600 Limited to weir flow at low heads
#3	Device 1	56.57'	**1.6' long x 0.7' breadth Broad-Crested Rectangular Weir** Head (feet) 0.20 0.40 0.60 0.80 1.00 1.20 1.40 1.60 1.80 2.00 2.50 Coef. (English) 2.76 2.82 2.93 3.09 3.18 3.22 3.27 3.30 3.32 3.31 3.32
#4	Device 1	56.57'	**1.8' long x 0.7' breadth Broad-Crested Rectangular Weir** Head (feet) 0.20 0.40 0.60 0.80 1.00 1.20 1.40 1.60 1.80 2.00 2.50 Coef. (English) 2.76 2.82 2.93 3.09 3.18 3.22 3.27 3.30 3.32 3.31 3.32

Primary OutFlow Max=0.00 cfs @ 0.00 hrs HW=50.40' (Free Discharge)
- **1=RCP_Round 18"** (Controls 0.00 cfs)
  - **2=Orifice/Grate** (Controls 0.00 cfs)
  - **3=Broad-Crested Rectangular Weir** (Controls 0.00 cfs)
  - **4=Broad-Crested Rectangular Weir** (Controls 0.00 cfs)

Pond EP: Existing Retention Basin - Pre Construction

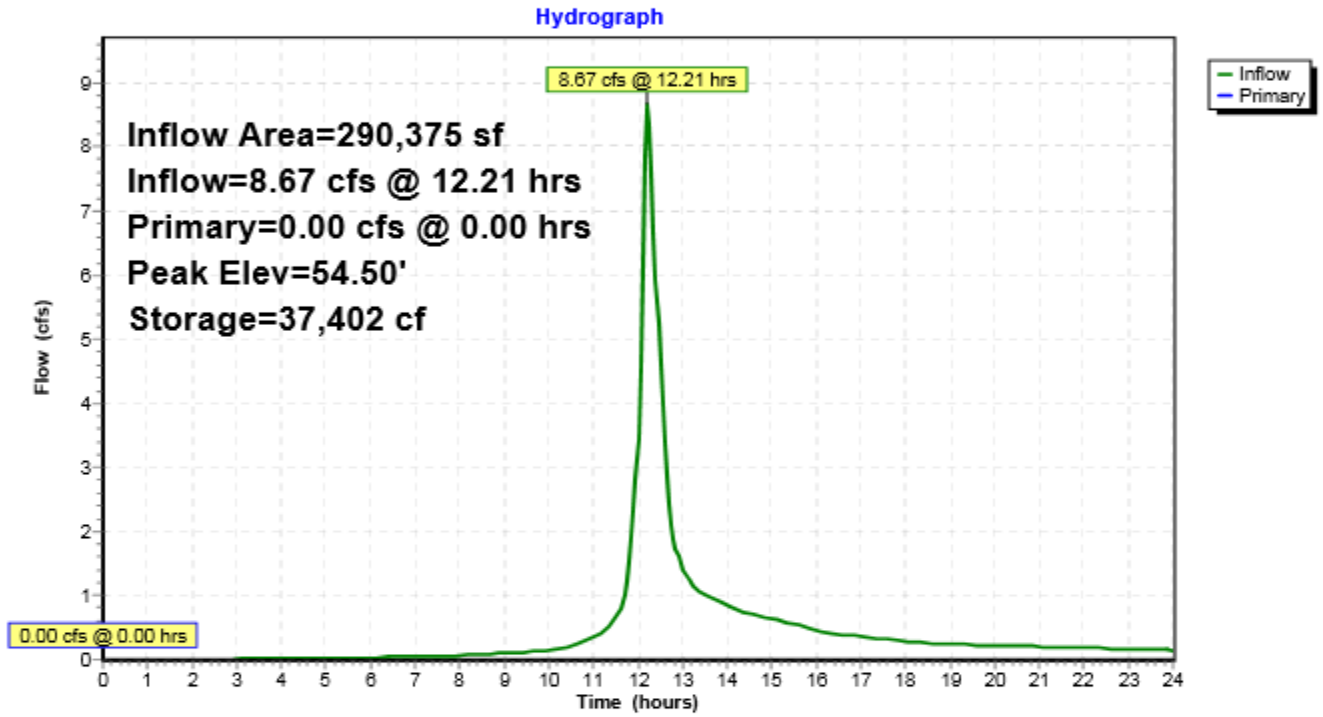

Summary for Pond PP: Existing Retention Basin - Post Construction

Inflow Area = 290,375 sf, 14.97% Impervious, Inflow Depth > 1.66" for 2-Year event
Inflow = 9.38 cfs @ 12.21 hrs, Volume= 40,056 cf
Outflow = 0.00 cfs @ 0.00 hrs, Volume= 0 cf, Atten= 100%, Lag= 0.0 min
Primary = 0.00 cfs @ 0.00 hrs, Volume= 0 cf

Routing by Stor-Ind method, Time Span= 0.00-24.00 hrs, dt= 0.05 hrs
Peak Elev= 54.72' @ 24.00 hrs Surf.Area= 12,195 sf Storage= 40,042 cf

Plug-Flow detention time= (not calculated: initial storage exceeds outflow)
Center-of-Mass det. time= (not calculated: no outflow)

Volume	Invert	Avail.Storage	Storage Description
#1	50.40'	84,582 cf	**Custom Stage Data (Prismatic)**Listed below

Elevation (feet)	Surf.Area (sq-ft)	Inc.Store (cubic-feet)	Cum.Store (cubic-feet)
50.40	0	0	0
50.50	4,930	247	247
51.00	7,380	3,078	3,324
52.00	8,770	8,075	11,399
53.00	10,000	9,385	20,784
54.00	11,260	10,630	31,414
55.00	12,550	11,905	43,319
56.00	13,890	13,220	56,539
57.00	15,450	14,670	71,209
58.00	1,684	8,567	79,776
58.50	17,540	4,806	84,582

Device	Routing	Invert	Outlet Devices
#1	Primary	52.22'	**18.0" Round Culvert** L= 563.0' RCP, square edge headwall, Ke= 0.500 Inlet / Outlet Invert= 52.22' / 46.24' S= 0.0106 '/' Cc= 0.900 n= 0.013 Concrete sewer w/manholes & inlets, Flow Area= 1.77 sf
#2	Device 1	58.17'	**75.0" x 20.0" Horiz. Orifice/Grate** C= 0.600 Limited to weir flow at low heads
#3	Device 1	56.57'	**80.0 deg x 0.3' long x 1.23' rise Sharp-Crested Vee/Trap Weir** Cv= 2.51 (C= 3.14)

Primary OutFlow Max=0.00 cfs @ 0.00 hrs HW=50.40' (Free Discharge)
└─**1=Culvert** (Controls 0.00 cfs)
  ├─**2=Orifice/Grate** (Controls 0.00 cfs)
  └─**3=Sharp-Crested Vee/Trap Weir** (Controls 0.00 cfs)

Pond PP: Existing Retention Basin - Post Construction

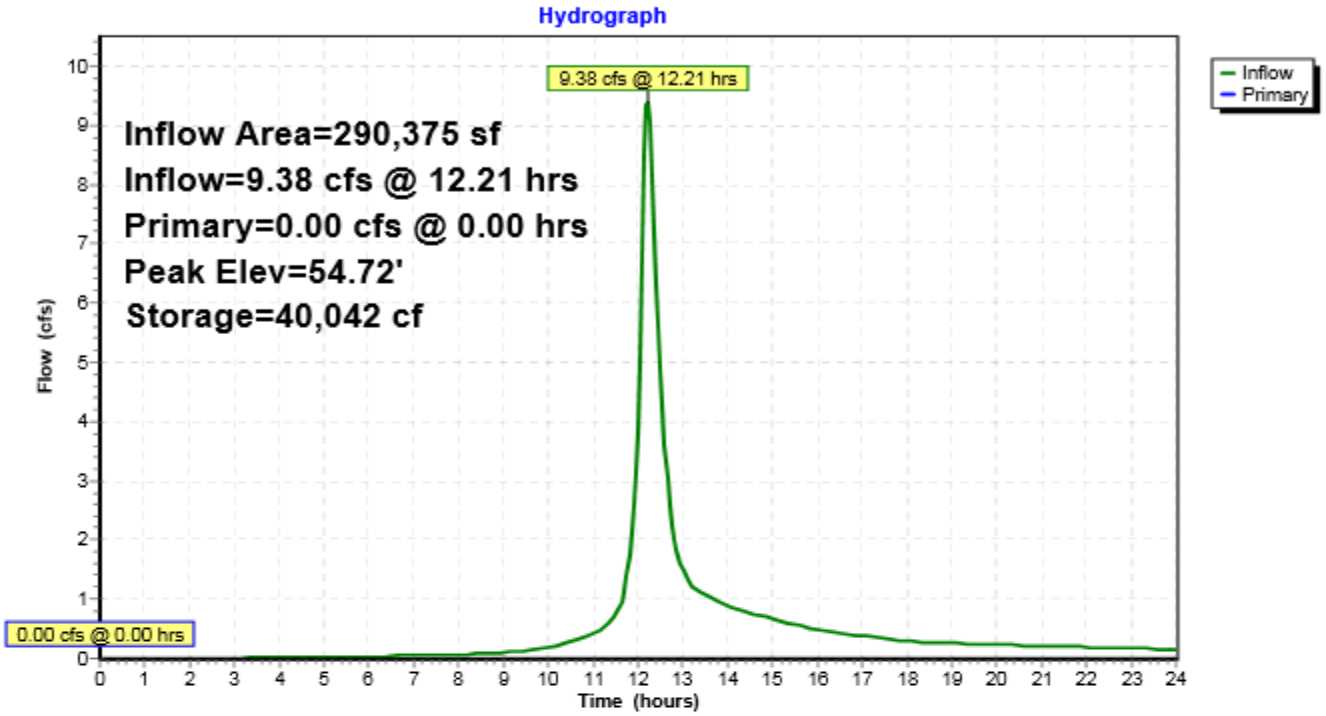

Time span=0.00-24.00 hrs, dt=0.05 hrs, 481 points
Runoff by SCS TR-20 method, UH=SCS, Split Pervious/Imperv. UI as Pervious
Reach routing by Stor-Ind+Trans method - Pond routing by Stor-Ind method

Subcatchment E-1: Existing Runoff Area=290,375 sf 14.97% Impervious Runoff Depth>2.26"
Tc=15.0 min CN=77/98 Runoff=12.89 cfs 54,738 cf

Subcatchment P-1: Developed Runoff Area=290,375 sf 14.97% Impervious Runoff Depth>2.40"
Tc=15.0 min CN=79/98 Runoff=13.73 cfs 57,973 cf

Pond EP: Existing Retention Basin - Pre Peak Elev=55.86' Storage=54,719 cf Inflow=12.89 cfs 54,738 cf
Outflow=0.00 cfs 0 cf

Pond PP: Existing Retention Basin - Post Peak Elev=56.10' Storage=57,954 cf Inflow=13.73 cfs 57,973 cf
Outflow=0.00 cfs 0 cf

Total Runoff Area = 580,750 sf Runoff Volume = 112,710 cf Average Runoff Depth = 2.33"
85.03% Pervious = 493,800 sf 14.97% Impervious = 86,950 sf

Summary for Subcatchment E-1: Existing Subcatchment

Runoff = 12.89 cfs @ 12.21 hrs, Volume= 54,738 cf, Depth> 2.26"

Runoff by SCS TR-20 method, UH=SCS, Split Pervious/Imperv. UI as Pervious, Time Span= 0.00-24.00 hrs, dt= (
Type III 24-hr 5-Year Rainfall=4.20"

	Area (sf)	CN	Description
*	39,100	98	Roads - Paved
*	4,375	98	Bldg - roof to drain system
*	2,125	89	Bldg - roof to overland
*	100,100	81	Yard - pervious surface
	129,175	74	>75% Grass cover, Good, HSG C
*	15,500	74	Retention Basin - Stone
	290,375	80	Weighted Average
	246,900	77	85.03% Pervious Area
	43,475	98	14.97% Impervious Area

Tc (min)	Length (feet)	Slope (ft/ft)	Velocity (ft/sec)	Capacity (cfs)	Description
15.0					**Direct Entry, Direct Entry - Assumed**

Subcatchment E-1: Existing Subcatchment

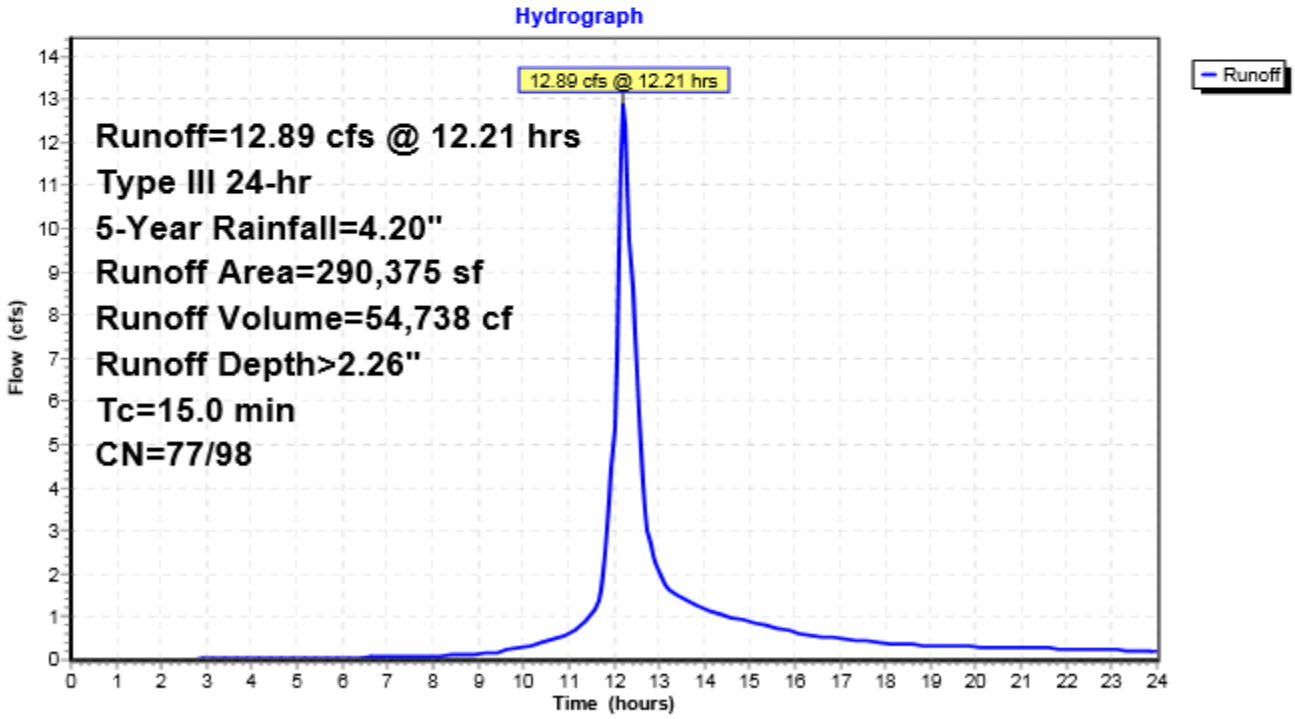

Summary for Subcatchment P-1: Developed Subcatchment

Runoff = 13.73 cfs @ 12.21 hrs, Volume= 57,973 cf, Depth> 2.40"

Runoff by SCS TR-20 method, UH=SCS, Split Pervious/Imperv. UI as Pervious, Time Span= 0.00-24.00 hrs, dt= (
Type III 24-hr 5-Year Rainfall=4.20"

	Area (sf)	CN	Description
*	39,100	98	Roads - Paved
*	4,375	98	Bldg - roof to drain system
*	4,724	89	Bldg - roof to overland
*	124,949	81	Yard - pervious surface
	89,727	74	>75% Grass cover, Good, HSG C
*	15,500	74	Retention Basin - Stone
	12,000	98	Unconnected pavement, HSG C
	290,375	82	Weighted Average
	246,900	79	85.03% Pervious Area
	43,475	98	14.97% Impervious Area

Tc (min)	Length (feet)	Slope (ft/ft)	Velocity (ft/sec)	Capacity (cfs)	Description
15.0					**Direct Entry, Direct Entry - Assumed**

Subcatchment P-1: Developed Subcatchment

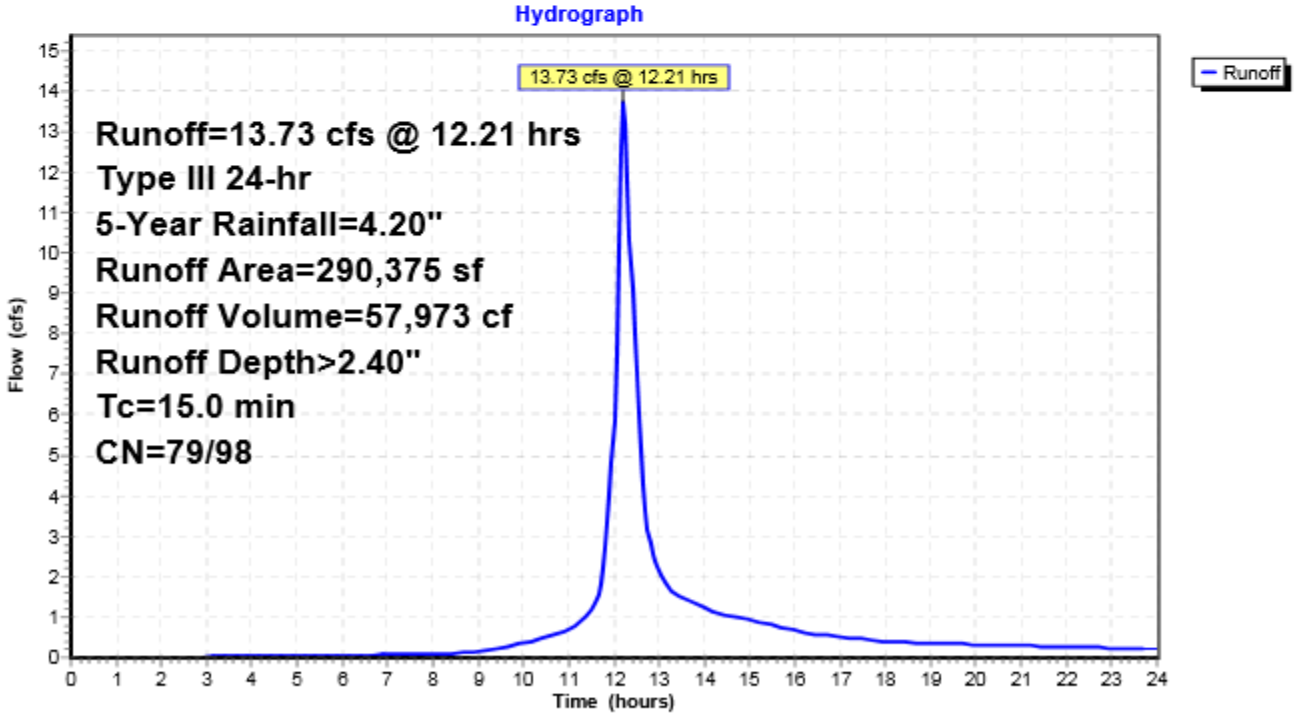

Summary for Pond EP: Existing Retention Basin - Pre Construction

Inflow Area = 290,375 sf, 14.97% Impervious, Inflow Depth > 2.26" for 5-Year event
Inflow = 12.89 cfs @ 12.21 hrs, Volume= 54,738 cf
Outflow = 0.00 cfs @ 0.00 hrs, Volume= 0 cf, Atten= 100%, Lag= 0.0 min
Primary = 0.00 cfs @ 0.00 hrs, Volume= 0 cf

Routing by Stor-Ind method, Time Span= 0.00-24.00 hrs, dt= 0.05 hrs
Peak Elev= 55.86' @ 24.00 hrs Surf.Area= 13,706 sf Storage= 54,719 cf

Plug-Flow detention time= (not calculated: initial storage exceeds outflow)
Center-of-Mass det. time= (not calculated: no outflow)

Volume	Invert	Avail.Storage	Storage Description
#1	50.40'	84,582 cf	**Custom Stage Data (Prismatic)**Listed below

Elevation (feet)	Surf.Area (sq-ft)	Inc.Store (cubic-feet)	Cum.Store (cubic-feet)
50.40	0	0	0
50.50	4,930	247	247
51.00	7,380	3,078	3,324
52.00	8,770	8,075	11,399
53.00	10,000	9,385	20,784
54.00	11,260	10,630	31,414
55.00	12,550	11,905	43,319
56.00	13,890	13,220	56,539
57.00	15,450	14,670	71,209
58.00	1,684	8,567	79,776
58.50	17,540	4,806	84,582

Device	Routing	Invert	Outlet Devices
#1	Primary	52.22'	**18.0" Round RCP_Round 18"** L= 563.0' RCP, square edge headwall, Ke= 0.500 Inlet / Outlet Invert= 52.22' / 46.24' S= 0.0106 '/' Cc= 0.900 n= 0.013 Concrete sewer w/manholes & inlets, Flow Area= 1.77 sf
#2	Device 1	58.17'	**75.0" x 20.0" Horiz. Orifice/Grate** C= 0.600 Limited to weir flow at low heads
#3	Device 1	56.57'	**1.6' long x 0.7' breadth Broad-Crested Rectangular Weir** Head (feet) 0.20 0.40 0.60 0.80 1.00 1.20 1.40 1.60 1.80 2.00 2.50 Coef. (English) 2.76 2.82 2.93 3.09 3.18 3.22 3.27 3.30 3.32 3.31 3.32
#4	Device 1	56.57'	**1.8' long x 0.7' breadth Broad-Crested Rectangular Weir** Head (feet) 0.20 0.40 0.60 0.80 1.00 1.20 1.40 1.60 1.80 2.00 2.50 Coef. (English) 2.76 2.82 2.93 3.09 3.18 3.22 3.27 3.30 3.32 3.31 3.32

Primary OutFlow Max=0.00 cfs @ 0.00 hrs HW=50.40' (Free Discharge)
- **1=RCP_Round 18"** (Controls 0.00 cfs)
  - **2=Orifice/Grate** (Controls 0.00 cfs)
  - **3=Broad-Crested Rectangular Weir** (Controls 0.00 cfs)
  - **4=Broad-Crested Rectangular Weir** (Controls 0.00 cfs)

Pond EP: Existing Retention Basin - Pre Construction

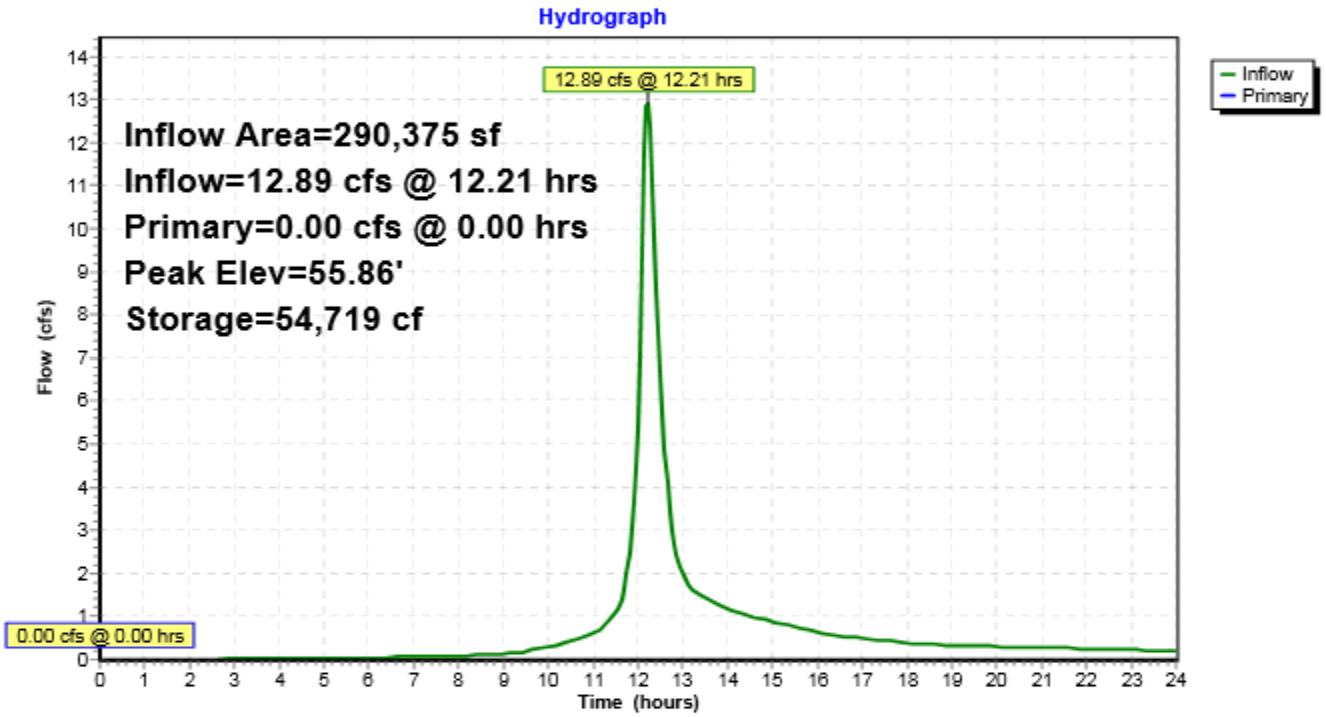

Summary for Pond PP: Existing Retention Basin - Post Construction

Inflow Area = 290,375 sf, 14.97% Impervious, Inflow Depth > 2.40" for 5-Year event
Inflow = 13.73 cfs @ 12.21 hrs, Volume= 57,973 cf
Outflow = 0.00 cfs @ 0.00 hrs, Volume= 0 cf, Atten= 100%, Lag= 0.0 min
Primary = 0.00 cfs @ 0.00 hrs, Volume= 0 cf

Routing by Stor-Ind method, Time Span= 0.00-24.00 hrs, dt= 0.05 hrs
Peak Elev= 56.10' @ 24.00 hrs Surf.Area= 14,040 sf Storage= 57,954 cf

Plug-Flow detention time= (not calculated: initial storage exceeds outflow)
Center-of-Mass det. time= (not calculated: no outflow)

Volume	Invert	Avail.Storage	Storage Description
#1	50.40'	84,582 cf	**Custom Stage Data (Prismatic)**Listed below

Elevation (feet)	Surf.Area (sq-ft)	Inc.Store (cubic-feet)	Cum.Store (cubic-feet)
50.40	0	0	0
50.50	4,930	247	247
51.00	7,380	3,078	3,324
52.00	8,770	8,075	11,399
53.00	10,000	9,385	20,784
54.00	11,260	10,630	31,414
55.00	12,550	11,905	43,319
56.00	13,890	13,220	56,539
57.00	15,450	14,670	71,209
58.00	1,684	8,567	79,776
58.50	17,540	4,806	84,582

Device	Routing	Invert	Outlet Devices
#1	Primary	52.22'	**18.0" Round Culvert** L= 563.0' RCP, square edge headwall, Ke= 0.500 Inlet / Outlet Invert= 52.22' / 46.24' S= 0.0106 '/' Cc= 0.900 n= 0.013 Concrete sewer w/manholes & inlets, Flow Area= 1.77 sf
#2	Device 1	58.17'	**75.0" x 20.0" Horiz. Orifice/Grate** C= 0.600 Limited to weir flow at low heads
#3	Device 1	56.57'	**80.0 deg x 0.3' long x 1.23' rise Sharp-Crested Vee/Trap Weir** Cv= 2.51 (C= 3.14)

Primary OutFlow Max=0.00 cfs @ 0.00 hrs HW=50.40' (Free Discharge)
└─**1=Culvert** (Controls 0.00 cfs)
  ├─**2=Orifice/Grate** (Controls 0.00 cfs)
  └─**3=Sharp-Crested Vee/Trap Weir** (Controls 0.00 cfs)

Pond PP: Existing Retention Basin - Post Construction

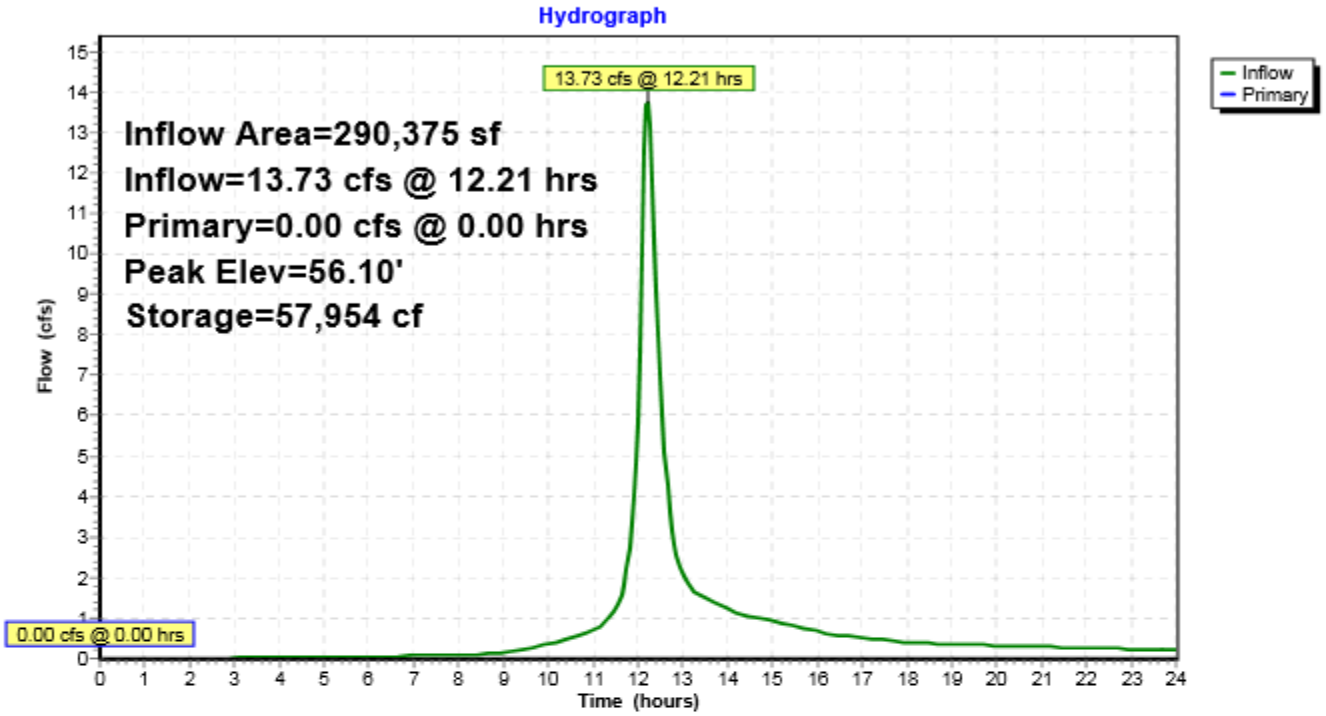

Time span=0.00-24.00 hrs, dt=0.05 hrs, 481 points
Runoff by SCS TR-20 method, UH=SCS, Split Pervious/Imperv. UI as Pervious
Reach routing by Stor-Ind+Trans method - Pond routing by Stor-Ind method

Subcatchment E-1: Existing Runoff Area=290,375 sf 14.97% Impervious Runoff Depth>2.94"
Tc=15.0 min CN=77/98 Runoff=16.82 cfs 71,038 cf

Subcatchment P-1: Developed Runoff Area=290,375 sf 14.97% Impervious Runoff Depth>3.09"
Tc=15.0 min CN=79/98 Runoff=17.74 cfs 74,710 cf

Pond EP: Existing Retention Basin - Pre Peak Elev=56.67' Storage=66,403 cf Inflow=16.82 cfs 71,038 cf
Outflow=0.33 cfs 4,784 cf

Pond PP: Existing Retention Basin - Post Peak Elev=56.89' Storage=69,624 cf Inflow=17.74 cfs 74,710 cf
Outflow=0.30 cfs 5,158 cf

Total Runoff Area = 580,750 sf Runoff Volume = 145,748 cf Average Runoff Depth = 3.01"
85.03% Pervious = 493,800 sf 14.97% Impervious = 86,950 sf

Summary for Subcatchment E-1: Existing Subcatchment

Runoff = 16.82 cfs @ 12.21 hrs, Volume= 71,038 cf, Depth> 2.94"

Runoff by SCS TR-20 method, UH=SCS, Split Pervious/Imperv. UI as Pervious, Time Span= 0.00-24.00 hrs, dt= (
Type III 24-hr 10-Year Rainfall=5.00"

	Area (sf)	CN	Description
*	39,100	98	Roads - Paved
*	4,375	98	Bldg - roof to drain system
*	2,125	89	Bldg - roof to overland
*	100,100	81	Yard - pervious surface
	129,175	74	>75% Grass cover, Good, HSG C
*	15,500	74	Retention Basin - Stone
	290,375	80	Weighted Average
	246,900	77	85.03% Pervious Area
	43,475	98	14.97% Impervious Area

Tc (min)	Length (feet)	Slope (ft/ft)	Velocity (ft/sec)	Capacity (cfs)	Description
15.0					**Direct Entry, Direct Entry - Assumed**

Subcatchment E-1: Existing Subcatchment

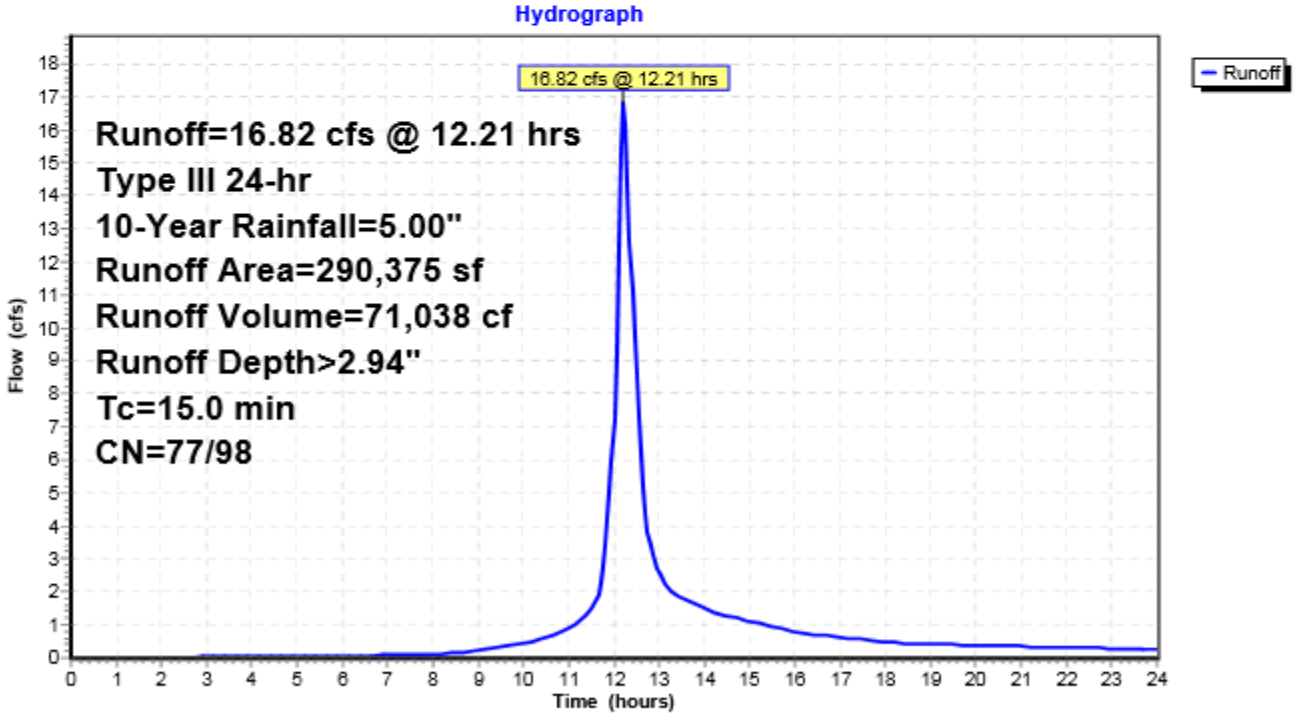

Summary for Subcatchment P-1: Developed Subcatchment

Runoff = 17.74 cfs @ 12.21 hrs, Volume= 74,710 cf, Depth> 3.09"

Runoff by SCS TR-20 method, UH=SCS, Split Pervious/Imperv. UI as Pervious, Time Span= 0.00-24.00 hrs, dt= (
Type III 24-hr 10-Year Rainfall=5.00"

	Area (sf)	CN	Description
*	39,100	98	Roads - Paved
*	4,375	98	Bldg - roof to drain system
*	4,724	89	Bldg - roof to overland
*	124,949	81	Yard - pervious surface
	89,727	74	>75% Grass cover, Good, HSG C
*	15,500	74	Retention Basin - Stone
	12,000	98	Unconnected pavement, HSG C
	290,375	82	Weighted Average
	246,900	79	85.03% Pervious Area
	43,475	98	14.97% Impervious Area

Tc (min)	Length (feet)	Slope (ft/ft)	Velocity (ft/sec)	Capacity (cfs)	Description
15.0					**Direct Entry, Direct Entry - Assumed**

Subcatchment P-1: Developed Subcatchment

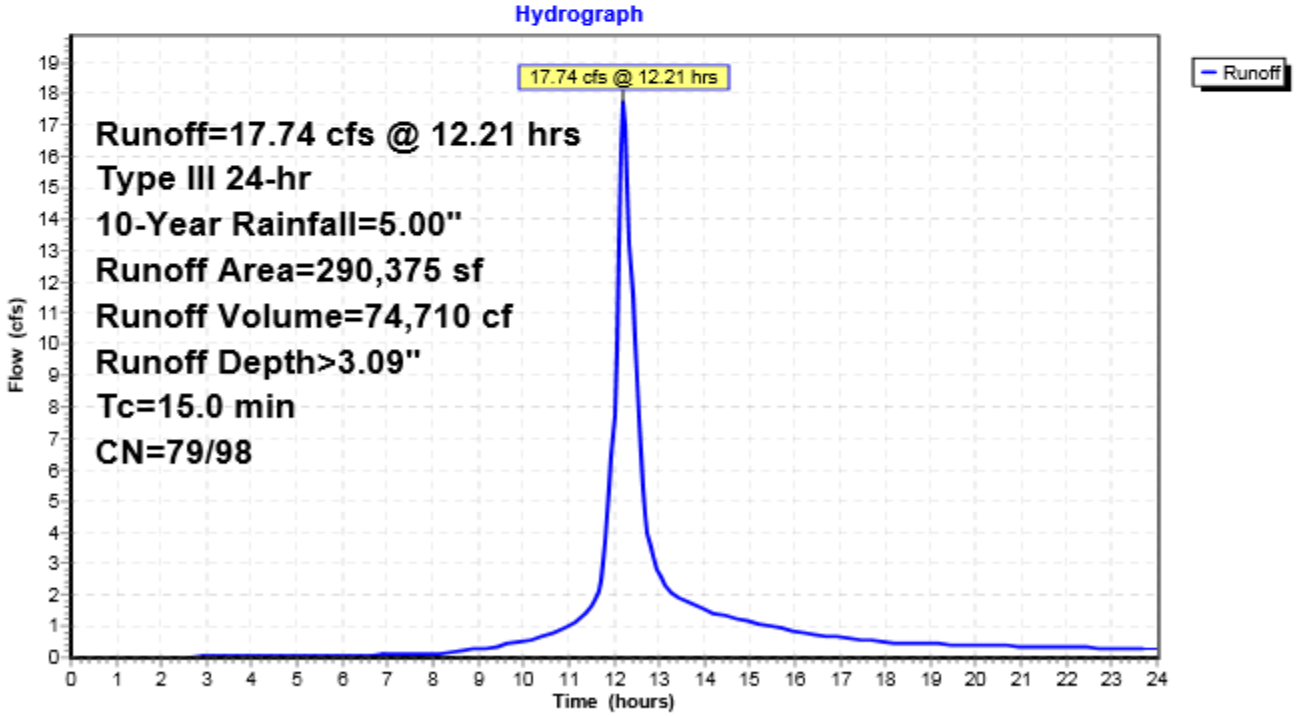

Summary for Pond EP: Existing Retention Basin - Pre Construction

Inflow Area = 290,375 sf, 14.97% Impervious, Inflow Depth > 2.94" for 10-Year event
Inflow = 16.82 cfs @ 12.21 hrs, Volume= 71,038 cf
Outflow = 0.33 cfs @ 21.74 hrs, Volume= 4,784 cf, Atten= 98%, Lag= 571.9 min
Primary = 0.33 cfs @ 21.74 hrs, Volume= 4,784 cf

Routing by Stor-Ind method, Time Span= 0.00-24.00 hrs, dt= 0.05 hrs
Peak Elev= 56.67' @ 21.74 hrs Surf.Area= 14,939 sf Storage= 66,403 cf

Plug-Flow detention time= 785.4 min calculated for 4,784 cf (7% of inflow)
Center-of-Mass det. time= 493.1 min (1,309.7 - 816.6)

Volume	Invert	Avail.Storage	Storage Description
#1	50.40'	84,582 cf	**Custom Stage Data (Prismatic)**Listed below

Elevation (feet)	Surf.Area (sq-ft)	Inc.Store (cubic-feet)	Cum.Store (cubic-feet)
50.40	0	0	0
50.50	4,930	247	247
51.00	7,380	3,078	3,324
52.00	8,770	8,075	11,399
53.00	10,000	9,385	20,784
54.00	11,260	10,630	31,414
55.00	12,550	11,905	43,319
56.00	13,890	13,220	56,539
57.00	15,450	14,670	71,209
58.00	1,684	8,567	79,776
58.50	17,540	4,806	84,582

Device	Routing	Invert	Outlet Devices
#1	Primary	52.22'	**18.0" Round RCP_Round 18"** L= 563.0' RCP, square edge headwall, Ke= 0.500 Inlet / Outlet Invert= 52.22' / 46.24' S= 0.0106 '/' Cc= 0.900 n= 0.013 Concrete sewer w/manholes & inlets, Flow Area= 1.77 sf
#2	Device 1	58.17'	**75.0" x 20.0" Horiz. Orifice/Grate** C= 0.600 Limited to weir flow at low heads
#3	Device 1	56.57'	**1.6' long x 0.7' breadth Broad-Crested Rectangular Weir** Head (feet) 0.20 0.40 0.60 0.80 1.00 1.20 1.40 1.60 1.80 2.00 2.50 Coef. (English) 2.76 2.82 2.93 3.09 3.18 3.22 3.27 3.30 3.32 3.31 3.32
#4	Device 1	56.57'	**1.8' long x 0.7' breadth Broad-Crested Rectangular Weir** Head (feet) 0.20 0.40 0.60 0.80 1.00 1.20 1.40 1.60 1.80 2.00 2.50 Coef. (English) 2.76 2.82 2.93 3.09 3.18 3.22 3.27 3.30 3.32 3.31 3.32

Primary OutFlow Max=0.31 cfs @ 21.74 hrs HW=56.67' (Free Discharge)
└─**1=RCP_Round 18"** (Passes 0.31 cfs of 12.34 cfs potential flow)
  ├─**2=Orifice/Grate** (Controls 0.00 cfs)
  ├─**3=Broad-Crested Rectangular Weir** (Weir Controls 0.14 cfs @ 0.88 fps)
  └─**4=Broad-Crested Rectangular Weir** (Weir Controls 0.16 cfs @ 0.88 fps)

Pond EP: Existing Retention Basin - Pre Construction

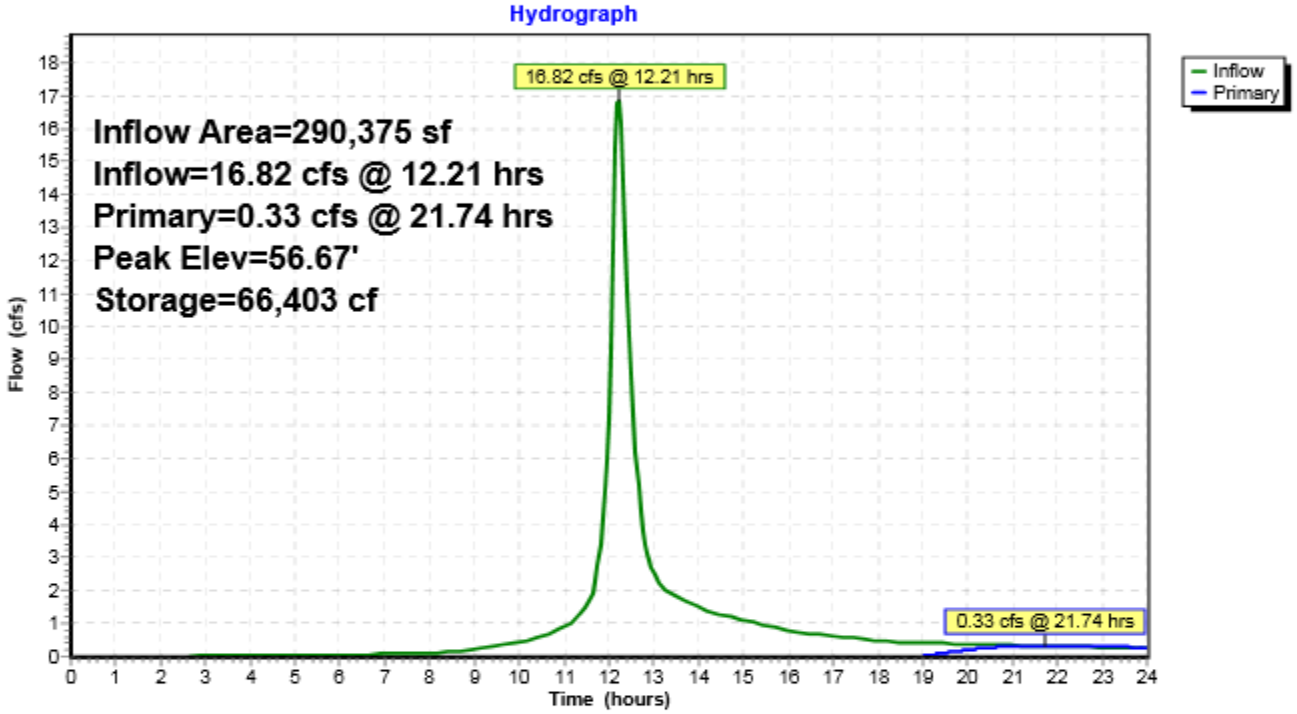

Summary for Pond PP: Existing Retention Basin - Post Construction

Inflow Area = 290,375 sf, 14.97% Impervious, Inflow Depth > 3.09" for 10-Year event
Inflow = 17.74 cfs @ 12.21 hrs, Volume= 74,710 cf
Outflow = 0.30 cfs @ 22.82 hrs, Volume= 5,158 cf, Atten= 98%, Lag= 636.6 min
Primary = 0.30 cfs @ 22.82 hrs, Volume= 5,158 cf

Routing by Stor-Ind method, Time Span= 0.00-24.00 hrs, dt= 0.05 hrs
Peak Elev= 56.89' @ 22.82 hrs Surf.Area= 15,281 sf Storage= 69,624 cf

Plug-Flow detention time= 760.6 min calculated for 5,147 cf (7% of inflow)
Center-of-Mass det. time= 473.0 min (1,286.6 - 813.6)

Volume	Invert	Avail.Storage	Storage Description
#1	50.40'	84,582 cf	**Custom Stage Data (Prismatic)**Listed below

Elevation (feet)	Surf.Area (sq-ft)	Inc.Store (cubic-feet)	Cum.Store (cubic-feet)
50.40	0	0	0
50.50	4,930	247	247
51.00	7,380	3,078	3,324
52.00	8,770	8,075	11,399
53.00	10,000	9,385	20,784
54.00	11,260	10,630	31,414
55.00	12,550	11,905	43,319
56.00	13,890	13,220	56,539
57.00	15,450	14,670	71,209
58.00	1,684	8,567	79,776
58.50	17,540	4,806	84,582

Device	Routing	Invert	Outlet Devices
#1	Primary	52.22'	**18.0" Round Culvert** L= 563.0' RCP, square edge headwall, Ke= 0.500 Inlet / Outlet Invert= 52.22' / 46.24' S= 0.0106 '/' Cc= 0.900 n= 0.013 Concrete sewer w/manholes & inlets, Flow Area= 1.77 sf
#2	Device 1	58.17'	**75.0" x 20.0" Horiz. Orifice/Grate** C= 0.600 Limited to weir flow at low heads
#3	Device 1	56.57'	**80.0 deg x 0.3' long x 1.23' rise Sharp-Crested Vee/Trap Weir** Cv= 2.51 (C= 3.14)

Primary OutFlow Max=0.30 cfs @ 22.82 hrs HW=56.89' (Free Discharge)
└─**1=Culvert** (Passes 0.30 cfs of 12.49 cfs potential flow)
  ├─**2=Orifice/Grate** (Controls 0.00 cfs)
  └─**3=Sharp-Crested Vee/Trap Weir** (Weir Controls 0.30 cfs @ 1.61 fps)

Pond PP: Existing Retention Basin - Post Construction

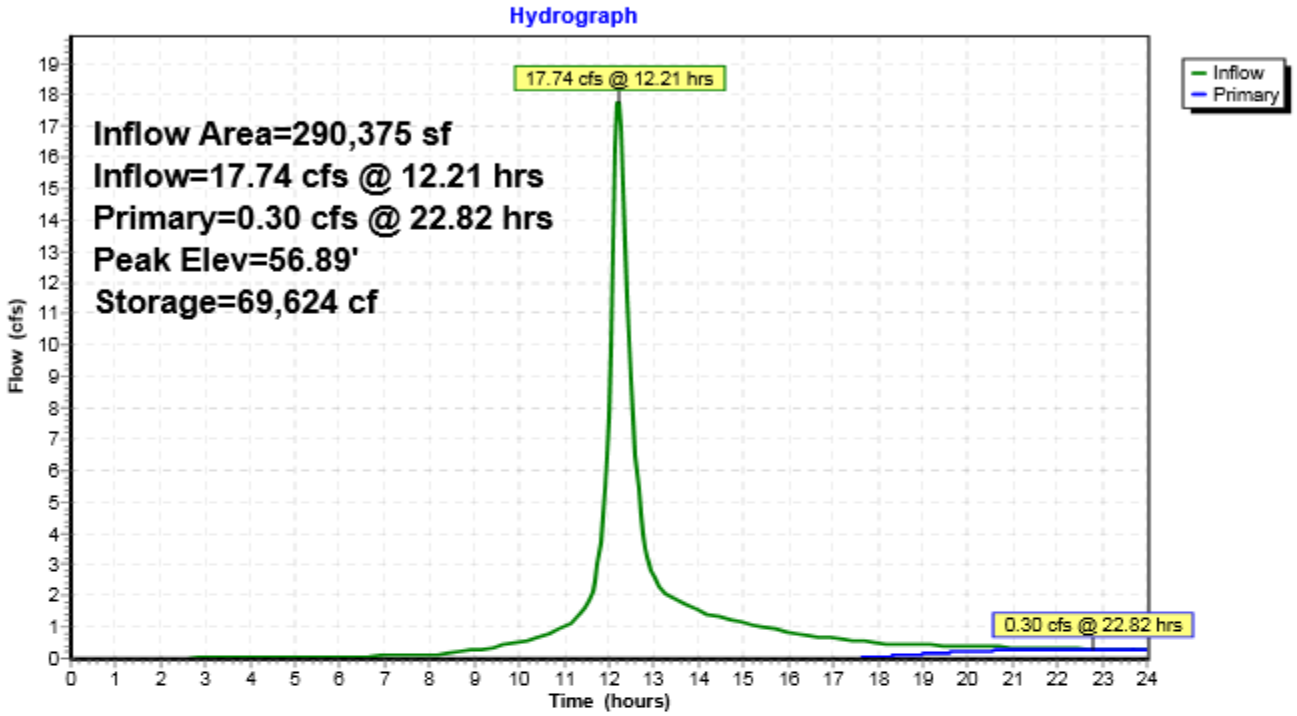

Time span=0.00-24.00 hrs, dt=0.05 hrs, 481 points
Runoff by SCS TR-20 method, UH=SCS, Split Pervious/Imperv. UI as Pervious
Reach routing by Stor-Ind+Trans method - Pond routing by Stor-Ind method

Subcatchment E-1: Existing Runoff Area=290,375 sf 14.97% Impervious Runoff Depth>3.46"
Tc=15.0 min CN=77/98 Runoff=19.85 cfs 83,661 cf

Subcatchment P-1: Developed Runoff Area=290,375 sf 14.97% Impervious Runoff Depth>3.62"
Tc=15.0 min CN=79/98 Runoff=20.80 cfs 87,614 cf

Pond EP: Existing Retention Basin - Pre Peak Elev=56.77' Storage=67,773 cf Inflow=19.85 cfs 83,661 cf
Outflow=0.83 cfs 17,267 cf

Pond PP: Existing Retention Basin - Post Peak Elev=57.08' Storage=71,929 cf Inflow=20.80 cfs 87,614 cf
Outflow=0.75 cfs 17,451 cf

Total Runoff Area = 580,750 sf Runoff Volume = 171,275 cf Average Runoff Depth = 3.54"
85.03% Pervious = 493,800 sf 14.97% Impervious = 86,950 sf

Summary for Subcatchment E-1: Existing Subcatchment

Runoff = 19.85 cfs @ 12.21 hrs, Volume= 83,661 cf, Depth> 3.46"

Runoff by SCS TR-20 method, UH=SCS, Split Pervious/Imperv. UI as Pervious, Time Span= 0.00-24.00 hrs, dt= (
Type III 24-hr 25-Year Rainfall=5.60"

	Area (sf)	CN	Description
*	39,100	98	Roads - Paved
*	4,375	98	Bldg - roof to drain system
*	2,125	89	Bldg - roof to overland
*	100,100	81	Yard - pervious surface
	129,175	74	>75% Grass cover, Good, HSG C
*	15,500	74	Retention Basin - Stone
	290,375	80	Weighted Average
	246,900	77	85.03% Pervious Area
	43,475	98	14.97% Impervious Area

Tc (min)	Length (feet)	Slope (ft/ft)	Velocity (ft/sec)	Capacity (cfs)	Description
15.0					**Direct Entry, Direct Entry - Assumed**

Subcatchment E-1: Existing Subcatchment

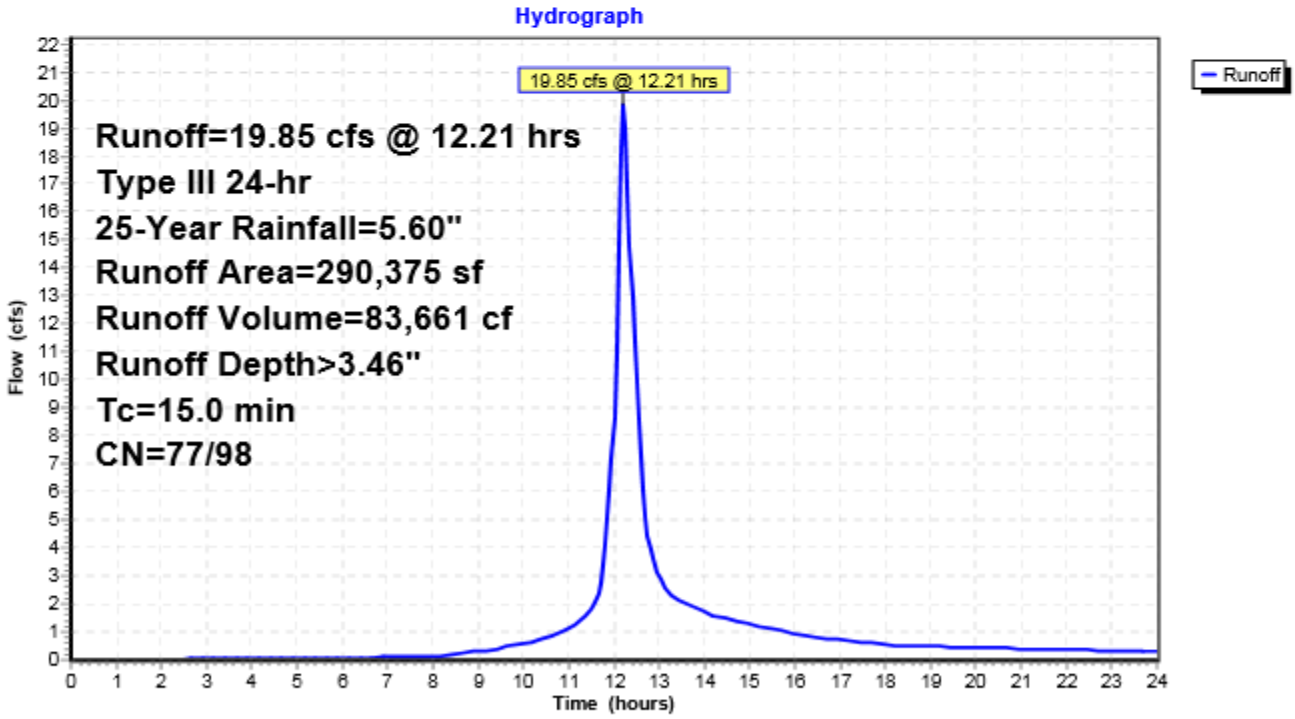

Summary for Subcatchment P-1: Developed Subcatchment

Runoff = 20.80 cfs @ 12.21 hrs, Volume= 87,614 cf, Depth> 3.62"

Runoff by SCS TR-20 method, UH=SCS, Split Pervious/Imperv. UI as Pervious, Time Span= 0.00-24.00 hrs, dt= (
Type III 24-hr 25-Year Rainfall=5.60"

	Area (sf)	CN	Description
*	39,100	98	Roads - Paved
*	4,375	98	Bldg - roof to drain system
*	4,724	89	Bldg - roof to overland
*	124,949	81	Yard - pervious surface
	89,727	74	>75% Grass cover, Good, HSG C
*	15,500	74	Retention Basin - Stone
	12,000	98	Unconnected pavement, HSG C
	290,375	82	Weighted Average
	246,900	79	85.03% Pervious Area
	43,475	98	14.97% Impervious Area

Tc (min)	Length (feet)	Slope (ft/ft)	Velocity (ft/sec)	Capacity (cfs)	Description
15.0					**Direct Entry, Direct Entry - Assumed**

Subcatchment P-1: Developed Subcatchment

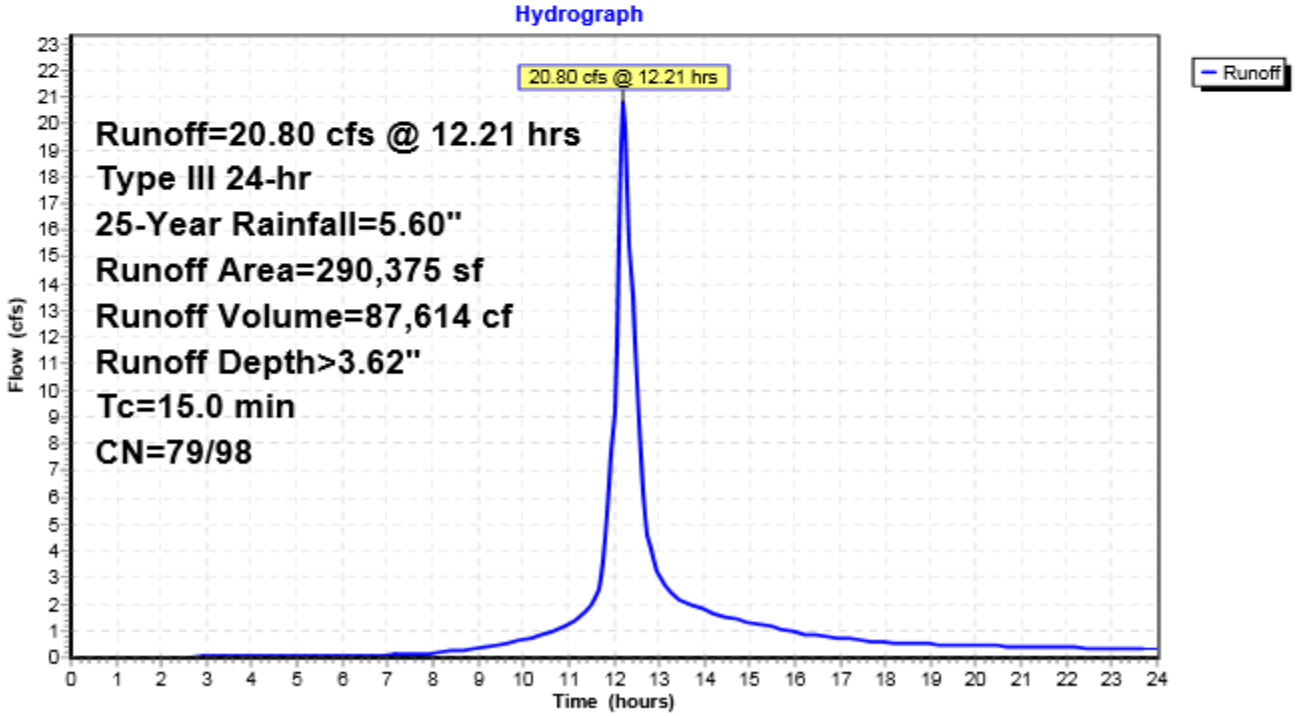

Summary for Pond EP: Existing Retention Basin - Pre Construction

Inflow Area = 290,375 sf, 14.97% Impervious, Inflow Depth > 3.46" for 25-Year event
Inflow = 19.85 cfs @ 12.21 hrs, Volume= 83,661 cf
Outflow = 0.83 cfs @ 16.34 hrs, Volume= 17,267 cf, Atten= 96%, Lag= 247.9 min
Primary = 0.83 cfs @ 16.34 hrs, Volume= 17,267 cf

Routing by Stor-Ind method, Time Span= 0.00-24.00 hrs, dt= 0.05 hrs
Peak Elev= 56.77' @ 16.34 hrs Surf.Area= 15,085 sf Storage= 67,773 cf

Plug-Flow detention time= 494.9 min calculated for 17,231 cf (21% of inflow)
Center-of-Mass det. time= 321.4 min (1,134.6 - 813.2)

Volume	Invert	Avail.Storage	Storage Description
#1	50.40'	84,582 cf	**Custom Stage Data (Prismatic)**Listed below

Elevation (feet)	Surf.Area (sq-ft)	Inc.Store (cubic-feet)	Cum.Store (cubic-feet)
50.40	0	0	0
50.50	4,930	247	247
51.00	7,380	3,078	3,324
52.00	8,770	8,075	11,399
53.00	10,000	9,385	20,784
54.00	11,260	10,630	31,414
55.00	12,550	11,905	43,319
56.00	13,890	13,220	56,539
57.00	15,450	14,670	71,209
58.00	1,684	8,567	79,776
58.50	17,540	4,806	84,582

Device	Routing	Invert	Outlet Devices
#1	Primary	52.22'	**18.0" Round RCP_Round 18"** L= 563.0' RCP, square edge headwall, Ke= 0.500 Inlet / Outlet Invert= 52.22' / 46.24' S= 0.0106 '/' Cc= 0.900 n= 0.013 Concrete sewer w/manholes & inlets, Flow Area= 1.77 sf
#2	Device 1	58.17'	**75.0" x 20.0" Horiz. Orifice/Grate** C= 0.600 Limited to weir flow at low heads
#3	Device 1	56.57'	**1.6' long x 0.7' breadth Broad-Crested Rectangular Weir** Head (feet) 0.20 0.40 0.60 0.80 1.00 1.20 1.40 1.60 1.80 2.00 2.50 Coef. (English) 2.76 2.82 2.93 3.09 3.18 3.22 3.27 3.30 3.32 3.31 3.32
#4	Device 1	56.57'	**1.8' long x 0.7' breadth Broad-Crested Rectangular Weir** Head (feet) 0.20 0.40 0.60 0.80 1.00 1.20 1.40 1.60 1.80 2.00 2.50 Coef. (English) 2.76 2.82 2.93 3.09 3.18 3.22 3.27 3.30 3.32 3.31 3.32

Primary OutFlow Max=0.81 cfs @ 16.34 hrs HW=56.77' (Free Discharge)
- **1=RCP_Round 18"** (Passes 0.81 cfs of 12.40 cfs potential flow)
  - **2=Orifice/Grate** (Controls 0.00 cfs)
  - **3=Broad-Crested Rectangular Weir** (Weir Controls 0.38 cfs @ 1.22 fps)
  - **4=Broad-Crested Rectangular Weir** (Weir Controls 0.43 cfs @ 1.22 fps)

Pond EP: Existing Retention Basin - Pre Construction

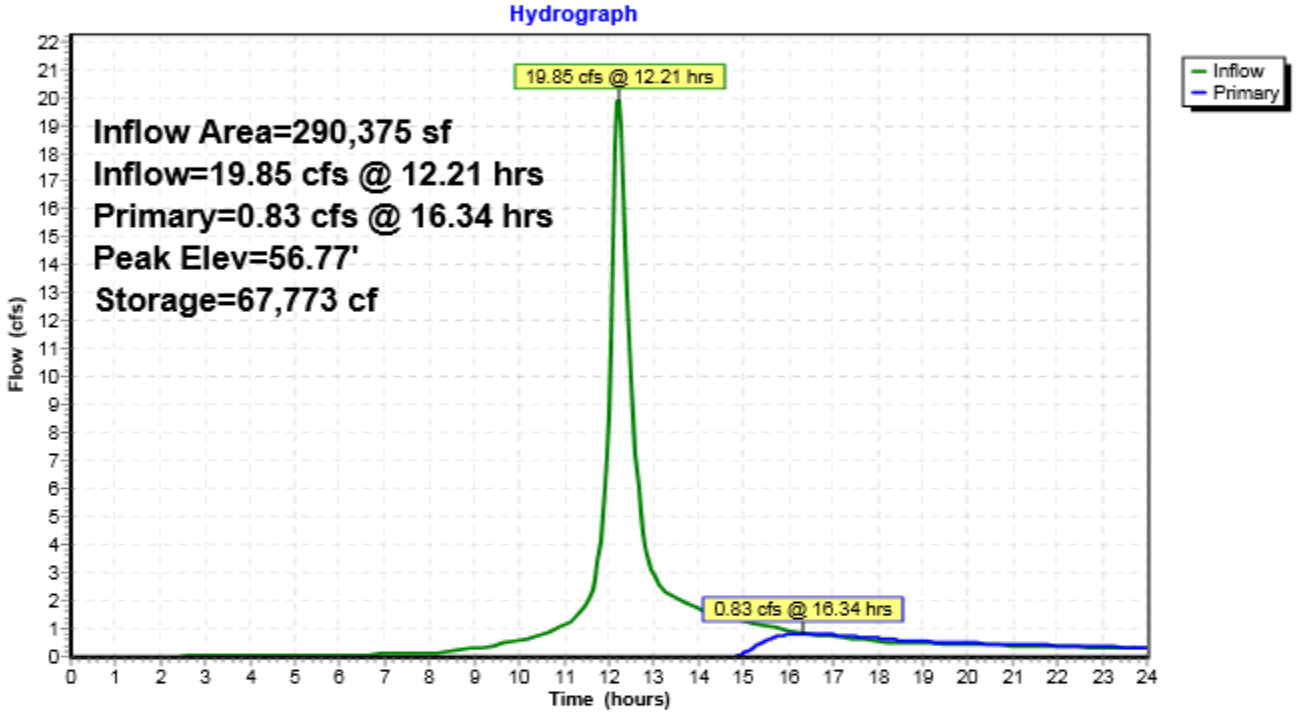

Summary for Pond PP: Existing Retention Basin - Post Construction

Inflow Area = 290,375 sf, 14.97% Impervious, Inflow Depth > 3.62" for 25-Year event
Inflow = 20.80 cfs @ 12.21 hrs, Volume= 87,614 cf
Outflow = 0.75 cfs @ 16.91 hrs, Volume= 17,451 cf, Atten= 96%, Lag= 282.4 min
Primary = 0.75 cfs @ 16.91 hrs, Volume= 17,451 cf

Routing by Stor-Ind method, Time Span= 0.00-24.00 hrs, dt= 0.05 hrs
Peak Elev= 57.08' @ 16.91 hrs Surf.Area= 14,293 sf Storage= 71,929 cf

Plug-Flow detention time= 512.5 min calculated for 17,414 cf (20% of inflow)
Center-of-Mass det. time= 335.5 min (1,145.6 - 810.1)

Volume	Invert	Avail.Storage	Storage Description
#1	50.40'	84,582 cf	**Custom Stage Data (Prismatic)**Listed below

Elevation (feet)	Surf.Area (sq-ft)	Inc.Store (cubic-feet)	Cum.Store (cubic-feet)
50.40	0	0	0
50.50	4,930	247	247
51.00	7,380	3,078	3,324
52.00	8,770	8,075	11,399
53.00	10,000	9,385	20,784
54.00	11,260	10,630	31,414
55.00	12,550	11,905	43,319
56.00	13,890	13,220	56,539
57.00	15,450	14,670	71,209
58.00	1,684	8,567	79,776
58.50	17,540	4,806	84,582

Device	Routing	Invert	Outlet Devices
#1	Primary	52.22'	**18.0" Round Culvert** L= 563.0' RCP, square edge headwall, Ke= 0.500 Inlet / Outlet Invert= 52.22' / 46.24' S= 0.0106 '/' Cc= 0.900 n= 0.013 Concrete sewer w/manholes & inlets, Flow Area= 1.77 sf
#2	Device 1	58.17'	**75.0" x 20.0" Horiz. Orifice/Grate** C= 0.600 Limited to weir flow at low heads
#3	Device 1	56.57'	**80.0 deg x 0.3' long x 1.23' rise Sharp-Crested Vee/Trap Weir** Cv= 2.51 (C= 3.14)

Primary OutFlow Max=0.75 cfs @ 16.91 hrs HW=57.08' (Free Discharge)
└─**1=Culvert** (Passes 0.75 cfs of 12.62 cfs potential flow)
  ├─**2=Orifice/Grate** (Controls 0.00 cfs)
  └─**3=Sharp-Crested Vee/Trap Weir** (Weir Controls 0.75 cfs @ 1.98 fps)

Pond PP: Existing Retention Basin - Post Construction

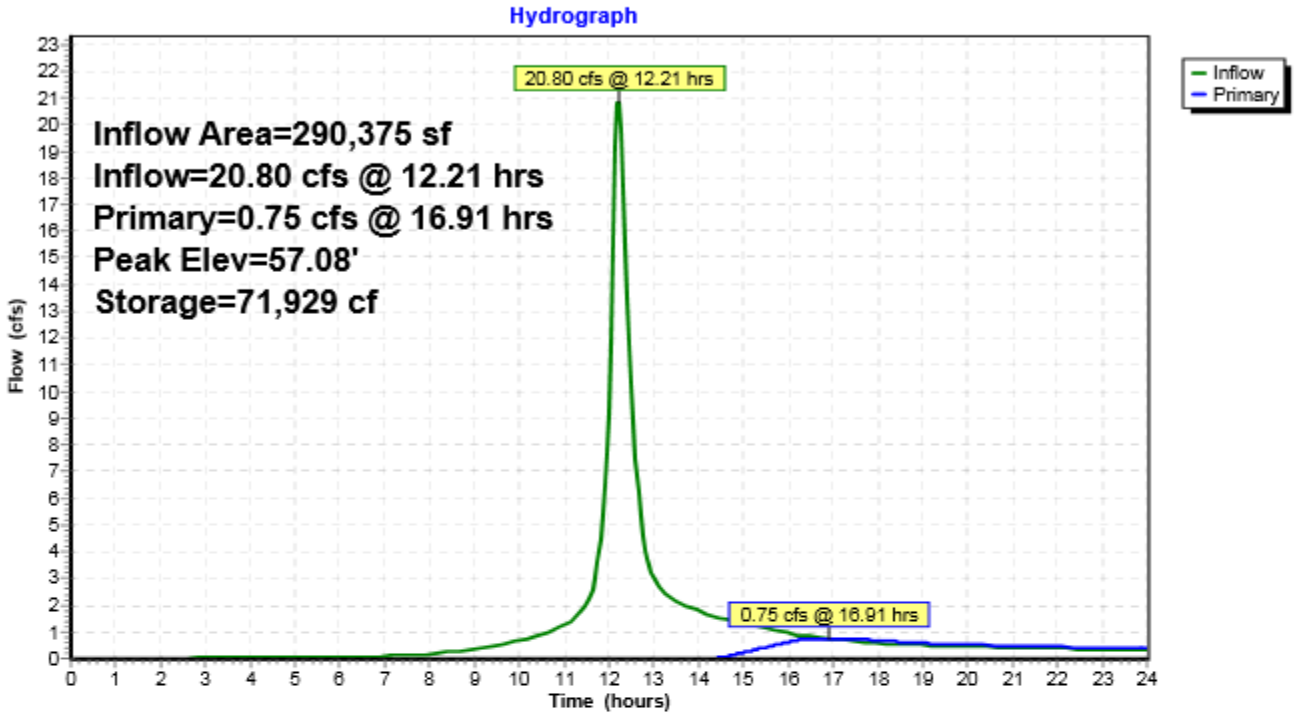

Time span=0.00-24.00 hrs, dt=0.05 hrs, 481 points
Runoff by SCS TR-20 method, UH=SCS, Split Pervious/Imperv. UI as Pervious
Reach routing by Stor-Ind+Trans method - Pond routing by Stor-Ind method

Subcatchment E-1: Existing Runoff Area=290,375 sf 14.97% Impervious Runoff Depth>4.08"
Tc=15.0 min CN=77/98 Runoff=23.42 cfs 98,714 cf

Subcatchment P-1: Developed Runoff Area=290,375 sf 14.97% Impervious Runoff Depth>4.25"
Tc=15.0 min CN=79/98 Runoff=24.42 cfs 102,955 cf

Pond EP: Existing Retention Basin - Pre Peak Elev=56.89' Storage=69,572 cf Inflow=23.42 cfs 98,714 cf
Outflow=1.71 cfs 32,168 cf

Pond PP: Existing Retention Basin - Post Peak Elev=57.32' Storage=73,987 cf Inflow=24.42 cfs 102,955 cf
Outflow=1.66 cfs 32,458 cf

Total Runoff Area = 580,750 sf Runoff Volume = 201,669 cf Average Runoff Depth = 4.17"
85.03% Pervious = 493,800 sf 14.97% Impervious = 86,950 sf

Summary for Subcatchment E-1: Existing Subcatchment

Runoff = 23.42 cfs @ 12.21 hrs, Volume= 98,714 cf, Depth> 4.08"

Runoff by SCS TR-20 method, UH=SCS, Split Pervious/Imperv. UI as Pervious, Time Span= 0.00-24.00 hrs, dt= (
Type III 24-hr 50-Year Rainfall=6.30"

	Area (sf)	CN	Description
*	39,100	98	Roads - Paved
*	4,375	98	Bldg - roof to drain system
*	2,125	89	Bldg - roof to overland
*	100,100	81	Yard - pervious surface
	129,175	74	>75% Grass cover, Good, HSG C
*	15,500	74	Retention Basin - Stone
	290,375	80	Weighted Average
	246,900	77	85.03% Pervious Area
	43,475	98	14.97% Impervious Area

Tc (min)	Length (feet)	Slope (ft/ft)	Velocity (ft/sec)	Capacity (cfs)	Description
15.0					**Direct Entry, Direct Entry - Assumed**

Subcatchment E-1: Existing Subcatchment

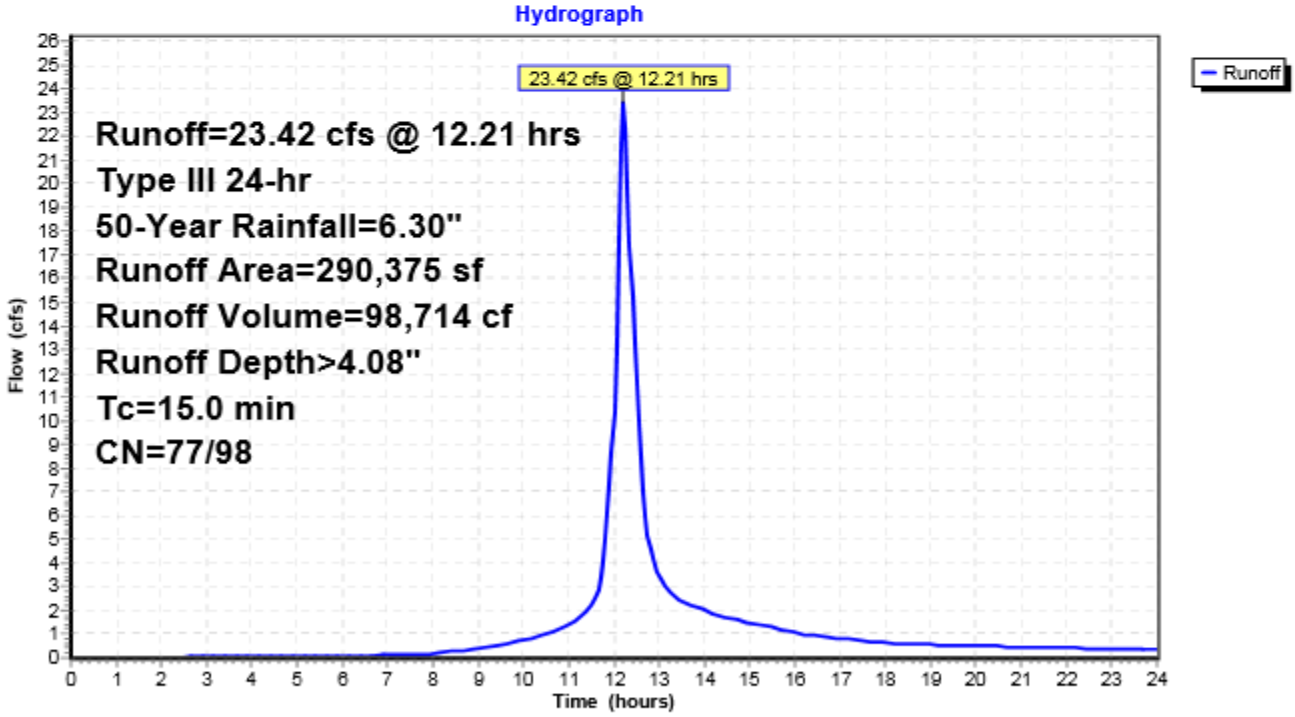

Summary for Subcatchment P-1: Developed Subcatchment

Runoff = 24.42 cfs @ 12.21 hrs, Volume= 102,955 cf, Depth> 4.25"

Runoff by SCS TR-20 method, UH=SCS, Split Pervious/Imperv. UI as Pervious, Time Span= 0.00-24.00 hrs, dt= (
Type III 24-hr 50-Year Rainfall=6.30"

	Area (sf)	CN	Description
*	39,100	98	Roads - Paved
*	4,375	98	Bldg - roof to drain system
*	4,724	89	Bldg - roof to overland
*	124,949	81	Yard - pervious surface
	89,727	74	>75% Grass cover, Good, HSG C
*	15,500	74	Retention Basin - Stone
	12,000	98	Unconnected pavement, HSG C
	290,375	82	Weighted Average
	246,900	79	85.03% Pervious Area
	43,475	98	14.97% Impervious Area

Tc (min)	Length (feet)	Slope (ft/ft)	Velocity (ft/sec)	Capacity (cfs)	Description
15.0					**Direct Entry, Direct Entry - Assumed**

Subcatchment P-1: Developed Subcatchment

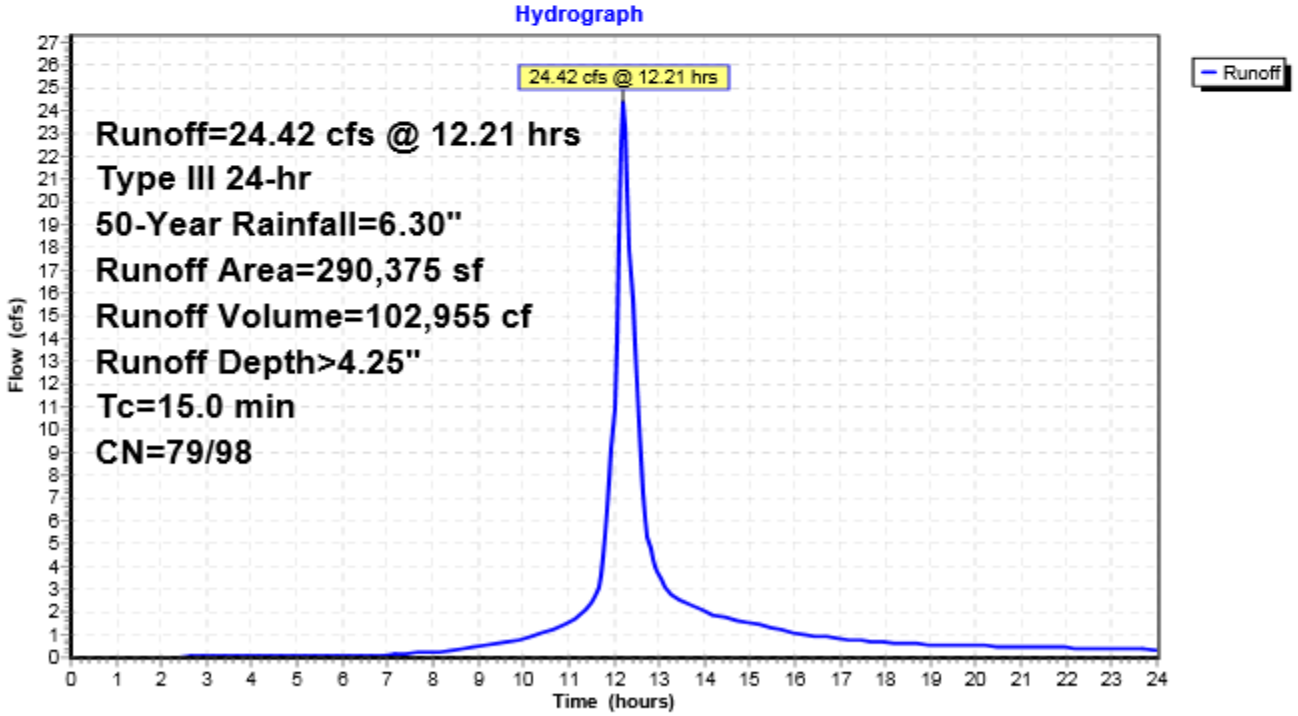

Summary for Pond EP: Existing Retention Basin - Pre Construction

Inflow Area = 290,375 sf, 14.97% Impervious, Inflow Depth > 4.08" for 50-Year event
Inflow = 23.42 cfs @ 12.21 hrs, Volume= 98,714 cf
Outflow = 1.71 cfs @ 14.44 hrs, Volume= 32,168 cf, Atten= 93%, Lag= 134.3 min
Primary = 1.71 cfs @ 14.44 hrs, Volume= 32,168 cf

Routing by Stor-Ind method, Time Span= 0.00-24.00 hrs, dt= 0.05 hrs
Peak Elev= 56.89' @ 14.44 hrs Surf.Area= 15,276 sf Storage= 69,572 cf

Plug-Flow detention time= 368.0 min calculated for 32,101 cf (33% of inflow)
Center-of-Mass det. time= 227.2 min (1,036.8 - 809.6)

Volume	Invert	Avail.Storage	Storage Description
#1	50.40'	84,582 cf	**Custom Stage Data (Prismatic)**Listed below

Elevation (feet)	Surf.Area (sq-ft)	Inc.Store (cubic-feet)	Cum.Store (cubic-feet)
50.40	0	0	0
50.50	4,930	247	247
51.00	7,380	3,078	3,324
52.00	8,770	8,075	11,399
53.00	10,000	9,385	20,784
54.00	11,260	10,630	31,414
55.00	12,550	11,905	43,319
56.00	13,890	13,220	56,539
57.00	15,450	14,670	71,209
58.00	1,684	8,567	79,776
58.50	17,540	4,806	84,582

Device	Routing	Invert	Outlet Devices
#1	Primary	52.22'	**18.0" Round RCP_Round 18"** L= 563.0' RCP, square edge headwall, Ke= 0.500 Inlet / Outlet Invert= 52.22' / 46.24' S= 0.0106 '/' Cc= 0.900 n= 0.013 Concrete sewer w/manholes & inlets, Flow Area= 1.77 sf
#2	Device 1	58.17'	**75.0" x 20.0" Horiz. Orifice/Grate** C= 0.600 Limited to weir flow at low heads
#3	Device 1	56.57'	**1.6' long x 0.7' breadth Broad-Crested Rectangular Weir** Head (feet) 0.20 0.40 0.60 0.80 1.00 1.20 1.40 1.60 1.80 2.00 2.50 Coef. (English) 2.76 2.82 2.93 3.09 3.18 3.22 3.27 3.30 3.32 3.31 3.32
#4	Device 1	56.57'	**1.8' long x 0.7' breadth Broad-Crested Rectangular Weir** Head (feet) 0.20 0.40 0.60 0.80 1.00 1.20 1.40 1.60 1.80 2.00 2.50 Coef. (English) 2.76 2.82 2.93 3.09 3.18 3.22 3.27 3.30 3.32 3.31 3.32

Primary OutFlow Max=1.71 cfs @ 14.44 hrs HW=56.89' (Free Discharge)
- **1=RCP_Round 18"** (Passes 1.71 cfs of 12.49 cfs potential flow)
  - **2=Orifice/Grate** (Controls 0.00 cfs)
  - **3=Broad-Crested Rectangular Weir** (Weir Controls 0.80 cfs @ 1.58 fps)
  - **4=Broad-Crested Rectangular Weir** (Weir Controls 0.90 cfs @ 1.58 fps)

Pond EP: Existing Retention Basin - Pre Construction

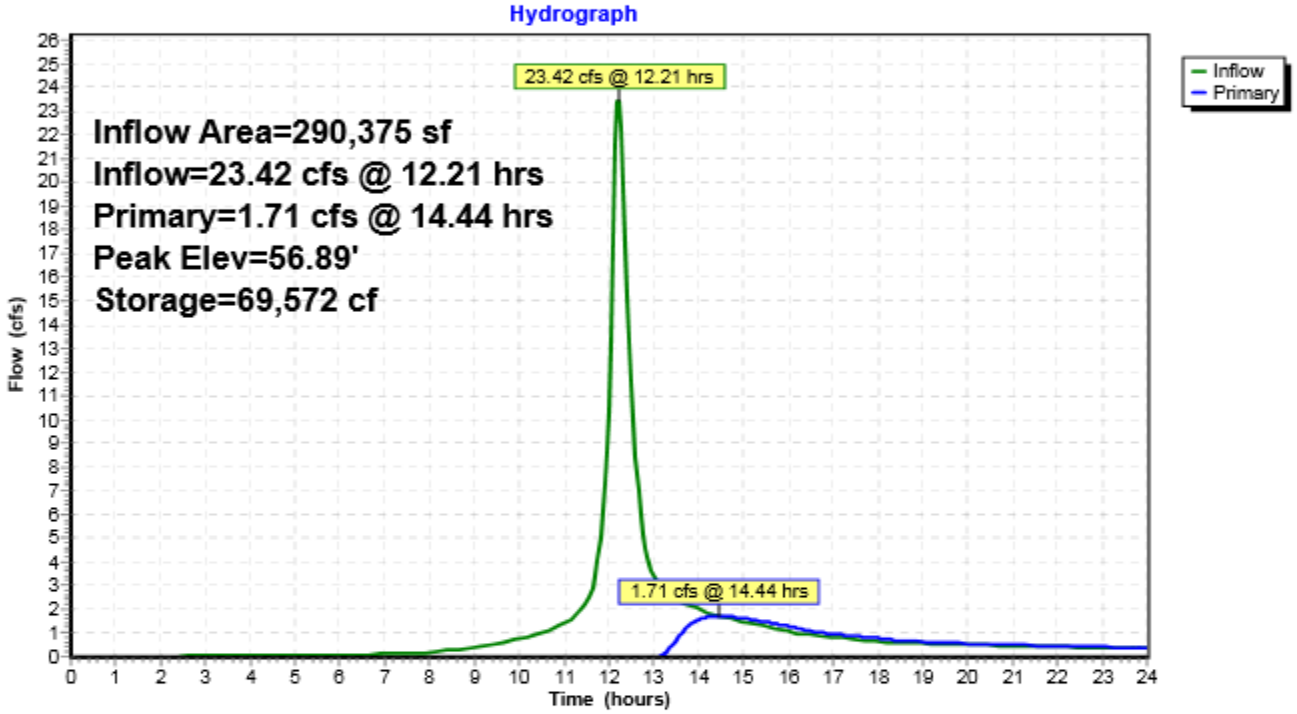

Summary for Pond PP: Existing Retention Basin - Post Construction

Inflow Area = 290,375 sf, 14.97% Impervious, Inflow Depth > 4.25" for 50-Year event
Inflow = 24.42 cfs @ 12.21 hrs, Volume= 102,955 cf
Outflow = 1.66 cfs @ 14.65 hrs, Volume= 32,458 cf, Atten= 93%, Lag= 146.7 min
Primary = 1.66 cfs @ 14.65 hrs, Volume= 32,458 cf

Routing by Stor-Ind method, Time Span= 0.00-24.00 hrs, dt= 0.05 hrs
Peak Elev= 57.32' @ 14.65 hrs Surf.Area= 10,986 sf Storage= 73,987 cf

Plug-Flow detention time= 382.5 min calculated for 32,458 cf (32% of inflow)
Center-of-Mass det. time= 238.9 min (1,045.4 - 806.5)

Volume	Invert	Avail.Storage	Storage Description
#1	50.40'	84,582 cf	**Custom Stage Data (Prismatic)**Listed below

Elevation (feet)	Surf.Area (sq-ft)	Inc.Store (cubic-feet)	Cum.Store (cubic-feet)
50.40	0	0	0
50.50	4,930	247	247
51.00	7,380	3,078	3,324
52.00	8,770	8,075	11,399
53.00	10,000	9,385	20,784
54.00	11,260	10,630	31,414
55.00	12,550	11,905	43,319
56.00	13,890	13,220	56,539
57.00	15,450	14,670	71,209
58.00	1,684	8,567	79,776
58.50	17,540	4,806	84,582

Device	Routing	Invert	Outlet Devices
#1	Primary	52.22'	**18.0" Round Culvert** L= 563.0' RCP, square edge headwall, Ke= 0.500 Inlet / Outlet Invert= 52.22' / 46.24' S= 0.0106 '/' Cc= 0.900 n= 0.013 Concrete sewer w/manholes & inlets, Flow Area= 1.77 sf
#2	Device 1	58.17'	**75.0" x 20.0" Horiz. Orifice/Grate** C= 0.600 Limited to weir flow at low heads
#3	Device 1	56.57'	**80.0 deg x 0.3' long x 1.23' rise Sharp-Crested Vee/Trap Weir** Cv= 2.51 (C= 3.14)

Primary OutFlow Max=1.66 cfs @ 14.65 hrs HW=57.32' (Free Discharge)
└─**1=Culvert** (Passes 1.66 cfs of 12.78 cfs potential flow)
  ├─**2=Orifice/Grate** (Controls 0.00 cfs)
  └─**3=Sharp-Crested Vee/Trap Weir** (Weir Controls 1.66 cfs @ 2.36 fps)

Pond PP: Existing Retention Basin - Post Construction

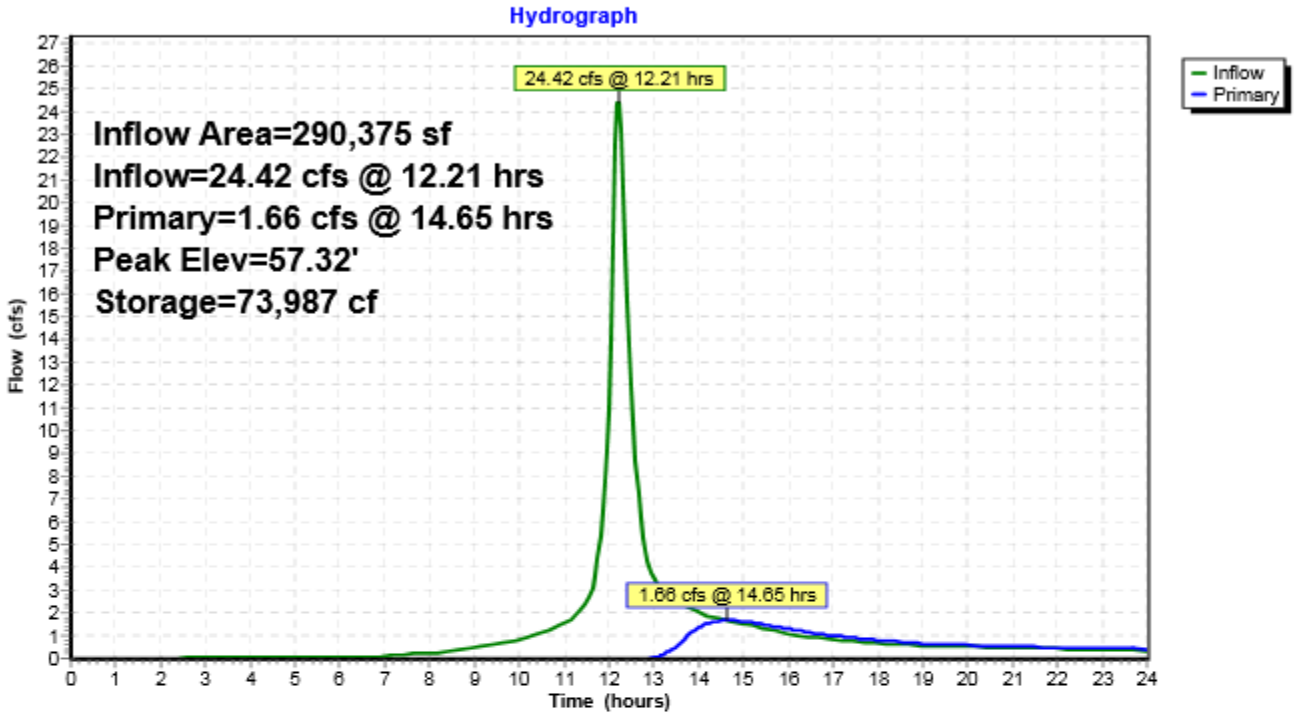

Time span=0.00-24.00 hrs, dt=0.05 hrs, 481 points
Runoff by SCS TR-20 method, UH=SCS, Split Pervious/Imperv. UI as Pervious
Reach routing by Stor-Ind+Trans method - Pond routing by Stor-Ind method

Subcatchment E-1: Existing Runoff Area=290,375 sf 14.97% Impervious Runoff Depth>4.80"
Tc=15.0 min CN=77/98 Runoff=27.55 cfs 116,253 cf

Subcatchment P-1: Developed Runoff Area=290,375 sf 14.97% Impervious Runoff Depth>4.99"
Tc=15.0 min CN=79/98 Runoff=28.57 cfs 120,779 cf

Pond EP: Existing Retention Basin - Pre Peak Elev=57.08' Storage=71,894 cf Inflow=27.55 cfs 116,253 cf
Outflow=3.58 cfs 49,533 cf

Pond PP: Existing Retention Basin - Post Peak Elev=57.61' Storage=76,392 cf Inflow=28.57 cfs 120,779 cf
Outflow=3.29 cfs 49,960 cf

Total Runoff Area = 580,750 sf Runoff Volume = 237,032 cf Average Runoff Depth = 4.90"
85.03% Pervious = 493,800 sf 14.97% Impervious = 86,950 sf

Summary for Subcatchment E-1: Existing Subcatchment

Runoff = 27.55 cfs @ 12.21 hrs, Volume= 116,253 cf, Depth> 4.80"

Runoff by SCS TR-20 method, UH=SCS, Split Pervious/Imperv. UI as Pervious, Time Span= 0.00-24.00 hrs, dt= (
Type III 24-hr 100-Year Rainfall=7.10"

	Area (sf)	CN	Description
*	39,100	98	Roads - Paved
*	4,375	98	Bldg - roof to drain system
*	2,125	89	Bldg - roof to overland
*	100,100	81	Yard - pervious surface
	129,175	74	>75% Grass cover, Good, HSG C
*	15,500	74	Retention Basin - Stone
	290,375	80	Weighted Average
	246,900	77	85.03% Pervious Area
	43,475	98	14.97% Impervious Area

Tc (min)	Length (feet)	Slope (ft/ft)	Velocity (ft/sec)	Capacity (cfs)	Description
15.0					**Direct Entry, Direct Entry - Assumed**

Subcatchment E-1: Existing Subcatchment

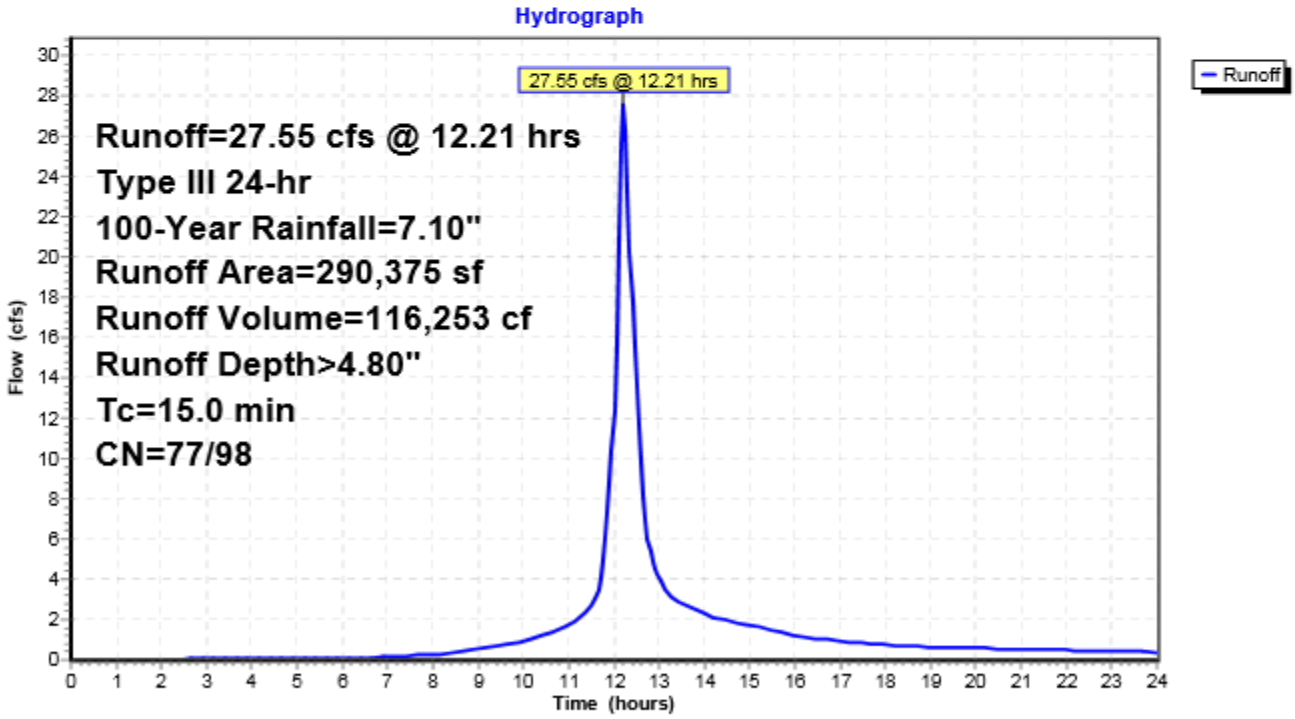

Summary for Subcatchment P-1: Developed Subcatchment

Runoff = 28.57 cfs @ 12.20 hrs, Volume= 120,779 cf, Depth> 4.99"

Runoff by SCS TR-20 method, UH=SCS, Split Pervious/Imperv. UI as Pervious, Time Span= 0.00-24.00 hrs, dt= (
Type III 24-hr 100-Year Rainfall=7.10"

	Area (sf)	CN	Description
*	39,100	98	Roads - Paved
*	4,375	98	Bldg - roof to drain system
*	4,724	89	Bldg - roof to overland
*	124,949	81	Yard - pervious surface
	89,727	74	>75% Grass cover, Good, HSG C
*	15,500	74	Retention Basin - Stone
	12,000	98	Unconnected pavement, HSG C
	290,375	82	Weighted Average
	246,900	79	85.03% Pervious Area
	43,475	98	14.97% Impervious Area

Tc (min)	Length (feet)	Slope (ft/ft)	Velocity (ft/sec)	Capacity (cfs)	Description
15.0					**Direct Entry, Direct Entry - Assumed**

Subcatchment P-1: Developed Subcatchment

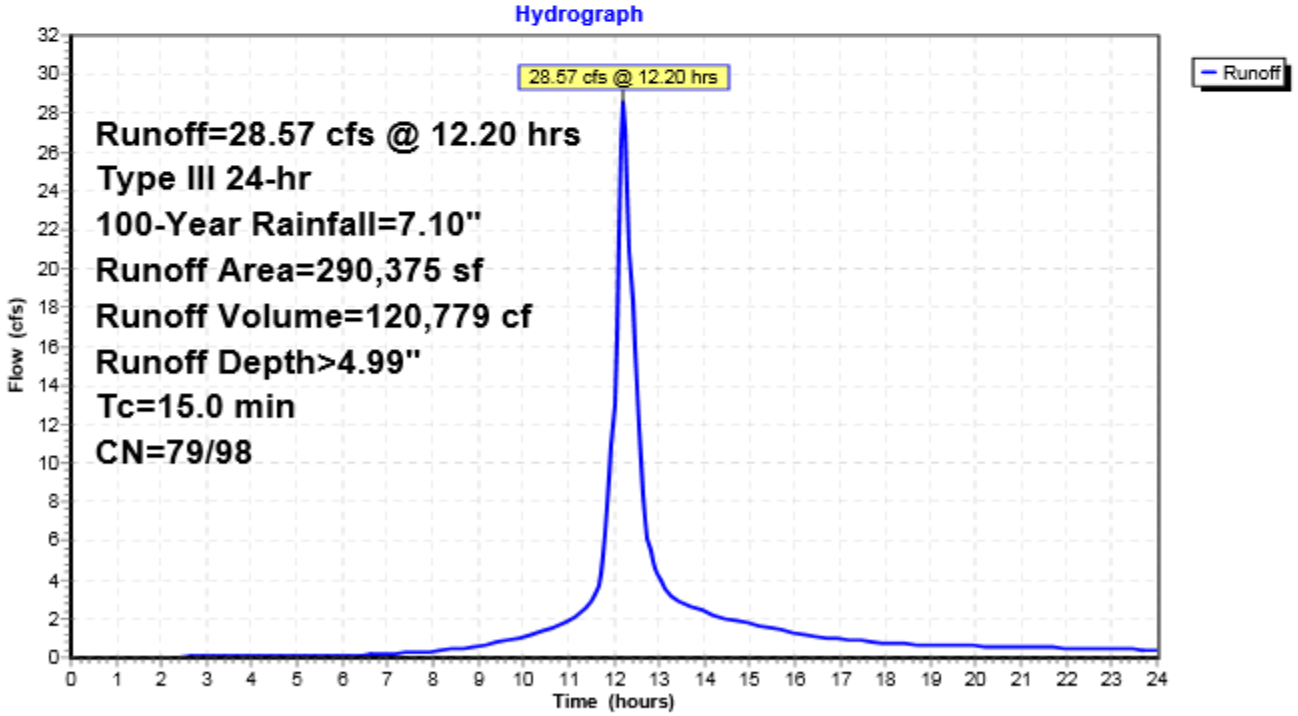

Summary for Pond EP: Existing Retention Basin - Pre Construction

Inflow Area = 290,375 sf, 14.97% Impervious, Inflow Depth > 4.80" for 100-Year event
Inflow = 27.55 cfs @ 12.21 hrs, Volume= 116,253 cf
Outflow = 3.58 cfs @ 13.10 hrs, Volume= 49,533 cf, Atten= 87%, Lag= 53.7 min
Primary = 3.58 cfs @ 13.10 hrs, Volume= 49,533 cf

Routing by Stor-Ind method, Time Span= 0.00-24.00 hrs, dt= 0.05 hrs
Peak Elev= 57.08' @ 13.10 hrs Surf.Area= 14,349 sf Storage= 71,894 cf

Plug-Flow detention time= 295.3 min calculated for 49,533 cf (43% of inflow)
Center-of-Mass det. time= 170.0 min (976.0 - 806.0)

Volume	Invert	Avail.Storage	Storage Description
#1	50.40'	84,582 cf	**Custom Stage Data (Prismatic)**Listed below

Elevation (feet)	Surf.Area (sq-ft)	Inc.Store (cubic-feet)	Cum.Store (cubic-feet)
50.40	0	0	0
50.50	4,930	247	247
51.00	7,380	3,078	3,324
52.00	8,770	8,075	11,399
53.00	10,000	9,385	20,784
54.00	11,260	10,630	31,414
55.00	12,550	11,905	43,319
56.00	13,890	13,220	56,539
57.00	15,450	14,670	71,209
58.00	1,684	8,567	79,776
58.50	17,540	4,806	84,582

Device	Routing	Invert	Outlet Devices
#1	Primary	52.22'	**18.0" Round RCP_Round 18"** L= 563.0' RCP, square edge headwall, Ke= 0.500 Inlet / Outlet Invert= 52.22' / 46.24' S= 0.0106 '/' Cc= 0.900 n= 0.013 Concrete sewer w/manholes & inlets, Flow Area= 1.77 sf
#2	Device 1	58.17'	**75.0" x 20.0" Horiz. Orifice/Grate** C= 0.600 Limited to weir flow at low heads
#3	Device 1	56.57'	**1.6' long x 0.7' breadth Broad-Crested Rectangular Weir** Head (feet) 0.20 0.40 0.60 0.80 1.00 1.20 1.40 1.60 1.80 2.00 2.50 Coef. (English) 2.76 2.82 2.93 3.09 3.18 3.22 3.27 3.30 3.32 3.31 3.32
#4	Device 1	56.57'	**1.8' long x 0.7' breadth Broad-Crested Rectangular Weir** Head (feet) 0.20 0.40 0.60 0.80 1.00 1.20 1.40 1.60 1.80 2.00 2.50 Coef. (English) 2.76 2.82 2.93 3.09 3.18 3.22 3.27 3.30 3.32 3.31 3.32

Primary OutFlow Max=3.57 cfs @ 13.10 hrs HW=57.08' (Free Discharge)
└─**1=RCP_Round 18"** (Passes 3.57 cfs of 12.62 cfs potential flow)
  ├─**2=Orifice/Grate** (Controls 0.00 cfs)
  ├─**3=Broad-Crested Rectangular Weir** (Weir Controls 1.68 cfs @ 2.06 fps)
  └─**4=Broad-Crested Rectangular Weir** (Weir Controls 1.89 cfs @ 2.06 fps)

Pond EP: Existing Retention Basin - Pre Construction

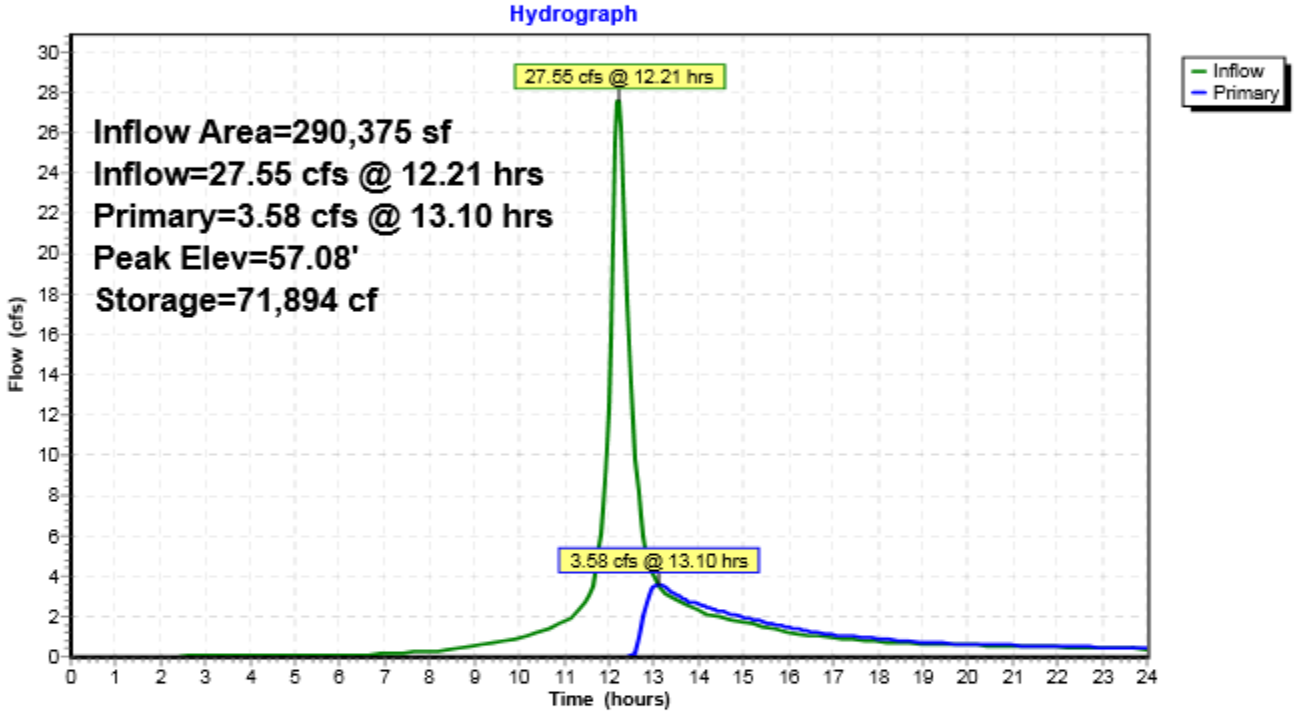

Summary for Pond PP: Existing Retention Basin - Post Construction

Inflow Area = 290,375 sf, 14.97% Impervious, Inflow Depth > 4.99" for 100-Year event
Inflow = 28.57 cfs @ 12.20 hrs, Volume= 120,779 cf
Outflow = 3.29 cfs @ 13.21 hrs, Volume= 49,960 cf, Atten= 88%, Lag= 60.5 min
Primary = 3.29 cfs @ 13.21 hrs, Volume= 49,960 cf

Routing by Stor-Ind method, Time Span= 0.00-24.00 hrs, dt= 0.05 hrs
Peak Elev= 57.61' @ 13.21 hrs Surf.Area= 7,121 sf Storage= 76,392 cf

Plug-Flow detention time= 305.3 min calculated for 49,960 cf (41% of inflow)
Center-of-Mass det. time= 178.5 min (981.4 - 802.9)

Volume	Invert	Avail.Storage	Storage Description
#1	50.40'	84,582 cf	**Custom Stage Data (Prismatic)**Listed below

Elevation (feet)	Surf.Area (sq-ft)	Inc.Store (cubic-feet)	Cum.Store (cubic-feet)
50.40	0	0	0
50.50	4,930	247	247
51.00	7,380	3,078	3,324
52.00	8,770	8,075	11,399
53.00	10,000	9,385	20,784
54.00	11,260	10,630	31,414
55.00	12,550	11,905	43,319
56.00	13,890	13,220	56,539
57.00	15,450	14,670	71,209
58.00	1,684	8,567	79,776
58.50	17,540	4,806	84,582

Device	Routing	Invert	Outlet Devices
#1	Primary	52.22'	**18.0" Round Culvert** L= 563.0' RCP, square edge headwall, Ke= 0.500 Inlet / Outlet Invert= 52.22' / 46.24' S= 0.0106 '/' Cc= 0.900 n= 0.013 Concrete sewer w/manholes & inlets, Flow Area= 1.77 sf
#2	Device 1	58.17'	**75.0" x 20.0" Horiz. Orifice/Grate** C= 0.600 Limited to weir flow at low heads
#3	Device 1	56.57'	**80.0 deg x 0.3' long x 1.23' rise Sharp-Crested Vee/Trap Weir** Cv= 2.51 (C= 3.14)

Primary OutFlow Max=3.28 cfs @ 13.21 hrs HW=57.60' (Free Discharge)
└─**1=Culvert** (Passes 3.28 cfs of 12.97 cfs potential flow)
  ├─**2=Orifice/Grate** (Controls 0.00 cfs)
  └─**3=Sharp-Crested Vee/Trap Weir** (Weir Controls 3.28 cfs @ 2.72 fps)

Pond PP: Existing Retention Basin - Post Construction

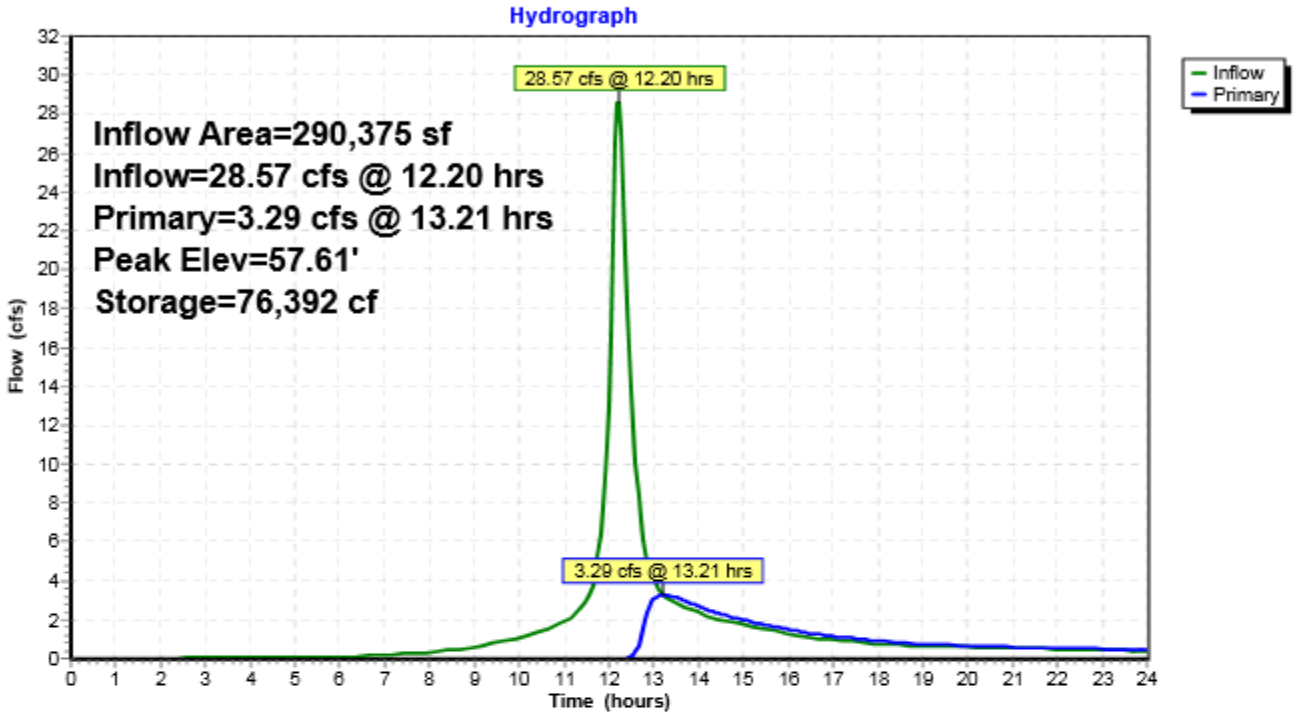

WATER QUALITY

Water Quality Volume & Flow Calculations **August 30, 2016**

Ref: "2004 Connecticut Stormwater Quality Manual, Chapter 7, Hydrologic Sizing Criteria for Stormwater Treatment Practices"

$$\text{Water Quality Volume (WQV)} = \frac{(1'')(R)(A)}{12}$$

R = Volumetric Runoff Coefficient, R= 0.05+0.009I
A = Site area (acres)
I = Post development site impervious (percentage in decimal format)

Determination of the Water Quality Flow has been determined for the verification of sizing of the Stormwater Quality Structure (Existing Retention Pond).

Detention System #1

Total Area	=	290,375 s.f. (6.666 ac)
Total Impervious Area	=	60,199 s.f. (1.382 ac)

Determine Water Quality Volume (WQV):

I = 0.21

R = 0.05 + 0.009(21) = 0.239

$$\text{WQV} = \frac{(1'')(0.239)(6.666)}{12} = 0.133 \text{ ac-ft (5,793 cf)}$$

Determine Water Quality Flow (WQF):

Compute runoff depth Q:

Q = (WQV x 12)/Drainage Area = (0.133 x 12)/6.666 = 0.239

CN = 82 (From Drainage Report) Ia = 0.439 (TR-55 Table 4-1)

Determine Ia/P: 0.439/1.0 = 0.439; Initial Abstraction qu = 300 csm/in

WQF = (qu)(A)(Q) = (300)(0.010)(0.239) = 0.72 cfs

The existing on-site stormwater retention basin with a maximum storage capacity of approximately 57,000 c.f. below the outlet provides sufficient suspended solids and floatables removal. The above calculated Water Quality Volume of 5,800± c.f. is completely retained within the pond and allowed to infiltrate and evaporate. Any buildup of sediment or pollution is removed during regularly scheduled maintenance of pond.

SITE DEVELOPMENT PLANS

BULK REQUIREMENTS

APPLICANT:	WALLINGFORD ENERGY II, LLC 400 CHESTERFIELD CENTER, SUITE 110, ST. LOUIS, MO 63017	
OWNER:	TOWN OF WALLINGFORD (SUBLESSE: WALLINGFORD ENERGY II, LLC)	
ZONE:	I-40 ZONE	
USE:	INDUSTRIAL	
	REQUIRED	PROVIDED
MINIMUM LOT AREA	40,000 SQ. FT.	1,172,435 SQ.FT. ± 26.9± ACRES
MINIMUM FRONTAGE	150 FT.	1,270 FT. ±
MINIMUM FRONT YARD	50 FT.	110 FT. ±
MINIMUM SIDE YARD	25 FT.	75 FT. ±
MINIMUM REAR YARD	50 FT.	424 FT. ±
MAXIMUM COVERAGE	35%	3% ±
MAXIMUM BUILDING HEIGHT	30 FT.	

GENERAL NOTES

1. TOPOGRAPHICAL, PROPERTY LINES, EXISTING SITE FEATURES, AND UTILITY INFORMATION TAKEN FROM MAPS PROVIDED BY WALLINGFORD ENERGY II. LLC AND ON FILE AT THE WALLINGFORD TOWN HALL. INFORMATION ON EXISTING UTILITIES HAS BEEN COMPILED FROM AVAILABLE INFORMATION INCLUDING UTILITY COMPANY AND MUNICIPAL RECORD MAPS AND FIELD SURVEY AND IS NOT GUARANTEED CORRECT OR COMPLETE. UTILITIES ARE SHOWN TO ALERT THE CONTRACTOR TO THEIR PRESENCE. THE CONTRACTOR AND/OR RESPONSIBLE PARTY IS SOLELY RESPONSIBLE FOR DETERMINING ACTUAL LOCATIONS AND ELEVATIONS OF ALL UTILITIES INCLUDING SERVICES. PRIOR TO CONSTRUCTION, CONTACT "CALL BEFORE YOU DIG" AT 800-922-4455 AND VERIFY ALL UNDERGROUND AND OVERHEAD UTILITY LOCATIONS.
2. IT IS THE RESPONSIBILITY OF THE CONTRACTOR TO VERIFY ALL ELEVATIONS, PROPERTY LINES, LOCATION OF UTILITIES AND SITE CONDITIONS IN THE FIELD. IF AN UNFORESEEN INTERFERENCE EXISTS BETWEEN AN EXISTING AND A PROPOSED STRUCTURE, THE CONTRACTOR SHALL NOTIFY THE DESIGN ENGINEER SO THAT THE APPROPRIATE REVISIONS CAN BE MADE.
3. IT IS THE DEVELOPER'S RESPONSIBILITY TO OBTAIN ALL NECESSARY PERMITS AND/OR EASEMENTS FROM STATE AND LOCAL AUTHORITIES AND ANY CONSTRUCTION RIGHTS AND/OR SLOPE RIGHTS AS MAY BE REQUIRED FROM THE PROPERTY OWNERS.
4. THE CONTRACTOR IS TO CONTACT "CALL BEFORE YOU DIG" TO HAVE ALL UTILITY LINES CLEARLY MARKED PRIOR TO ANY EXCAVATION.
5. IT IS THE CONTRACTOR'S RESPONSIBILITY TO ASSURE THAT ALL PIPING IS PROPERLY BEDDED AND STABILIZED IN AREAS OF HIGH GROUND WATER AND/OR UNSTABLE SOIL CONDITIONS.
6. IT IS THE RESPONSIBILITY OF EACH BIDDER IN EVALUATING THESE PLANS TO MAKE EXAMINATIONS IN THE FIELD BY VARIOUS METHODS AND OBTAIN NECESSARY INFORMATION FROM AVAILABLE RECORDS, UTILITY CORPORATIONS, AND INDIVIDUALS AS TO THE LOCATION OF ALL SUBSURFACE STRUCTURES.
7. THE CONTRACTOR IS TO USE CAUTION WHEN WORKING NEAR OR UNDER OVERHEAD AND UNDERGROUND UTILITIES. THE CONTRACTOR IS TO NOTIFY THE UTILITY COMPANIES OF HIS INTENT PRIOR TO THE COMMENCEMENT OF ANY WORK.
8. ALL CONSTRUCTION SHALL BE IN ACCORDANCE WITH THE TOWN OF WALLINGFORD STANDARDS AND/OR CONNECTICUT DEPARTMENT OF TRANSPORTATION (CT-DOT) FORM 816, LATEST EDITION.
9. ANY DRAINAGE STRUCTURES, DITCHES, ASPHALT, CURBS OR GRASSED AREAS DISTURBED DURING CONSTRUCTION SHALL BE RESTORED TO THE ORIGINAL CONDITION.
10. ALL AREAS OF DISTURBED EARTH SHALL BE STABILIZED BY MULCHING OR OTHER MEANS. SEEDING OF GRASSED AREAS SHALL BE INITIATED AS SOON AS PRACTICAL AS AN EROSION AND SILTATION CONTROL MEASURE.
11. ALL STORM SEWER LINES ARE TO BE INSTALLED USING INVERT ELEVATIONS, PIPE SLOPES SHOWN ARE APPROXIMATE AND ARE FOR REFERENCE ONLY.
12. APPLICABLE STORM SEWER CONSTRUCTION SHALL CONFORM TO THE TOWN OF WALLINGFORD STORM SEWER SPECIFICATIONS.
13. STORM DRAINAGE PIPING SHALL BE AS FOLLOWS:
    CPP-ADS N-12 OR HANCOR CORRUGATED POLYETHYLENE PIPE WITH SMOOTH INTERIOR HIQ-HANCOR HI-Q CORRUGATED POLYETHYLENE PIPE WITH SMOOTH INTERIOR RCP-REINFORCED CONCRETE PIPE
14. ALL ROOF DRAINS ARE TO BE CONNECTED TO THE STORM DRAINAGE SYSTEM WHERE SHOWN.
15. THE REQUIREMENTS FOR ADDITIONAL UNDERDRAINAGE, DRAINAGE, CATCH BASINS, RETAINING AND/OR HEADWALLS NOT SHOWN ON THESE PLANS IS TO BE FIELD DETERMINED AFTER DRIVEWAYS AND PARKING AREAS HAVE BEEN CUT TO SUBGRADE.
16. WATER LINE CROSSING ALL OTHER UTILITIES SHALL MAINTAIN A 12 INCH VERTICAL SEPARATION DISTANCE. NO WATER LINE IS TO BE INSTALLED WITHIN 10 FEET OF THE SANITARY SEWER SYSTEM.
17. RETAINING WALLS OVER 3' IN HEIGHT ARE TO BE DESIGNED AND CONSTRUCTED UNDER THE SUPERVISION OF A STATE OF CONNECTICUT LICENSED PROFESSIONAL ENGINEER.
18. RETAINING WALLS THAT REQUIRE AN ENGINEERED DESIGN SHALL BE SUBMITTED TO THE TOWN OF WALLINGFORD BUILDING DEPARTMENT ALONG WITH CALCULATIONS FOR REVIEW AND APPROVAL BEFORE ANY CONSTRUCTION BEGINS.
19. PROPOSED WATER SERVICES ARE TO MEET THE REQUIREMENTS OF THE STATE PLUMBING CODES AND WALLINGFORD WATER DEPARTMENT.
20. THE ON-SITE DRAINAGE SYSTEM WILL REMAIN PRIVATE. THE PROPERTY OWNER IS TO PROVIDE REGULAR MAINTENANCE OF THE SYSTEM TO ALLOW IT TO CONTINUALLY FUNCTION AS INTENDED.
21. ANY WORK AFFECTING EXISTING TREES WITHIN A CITY ROAD RIGHT-OF-WAY OR ON CITY PROPERTY IS TO BE APPROVED BY THE TOWN OF WALLINGFORD.
22. RETAINING WALLS ARE TO HAVE PROTECTIVE FENCING WHERE WARRANTED.
23. COMPACTION OF FILL IS TO BE PROVIDED IN ACCORDANCE WITH CT-DOT FORM 816.
24. UTILITY SERVICES ARE TO BE ABANDONED IN ACCORDANCE WITH THE UTILITY OWNERS REQUIREMENTS PRIOR TO SITE WORK.
25. RELOCATION OF UTILITY COMPANY FACILITIES SUCH AS POLES, SHALL BE DONE IN ACCORDANCE WITH THE REQUIREMENTS OF THE FACILITY OWNERS.
26. A PORTION OF THE PARCEL IS LOCATED WITH A SPECIAL FLOOD HAZARD AREA ZONE AE, PER "FIRM FLOOD INSURANCE RATE MAP, NEW HAVEN COUNTY, CONNECTICUT (ALL JURISDICTIONS) PANEL 304 OF 635, MAP NUMBER 09009C0304H; EFFECTIVE DATE DECEMBER 17, 2010," FROM FEDERAL EMERGENCY MANAGEMENT AGENCY.

REFERENCE MAPS:

1. WALLINGFORD EXPANSION PROJECT BY LS POWER DEVELOPMENT, LLC; SITE PLAN, G1; REVISED 10-27-2014
2. UTILITIES AT ALFRED PIERCE ELECTRIC GENERATING PLANT BY TOWN OF WALLINGFORD, CONNECTICUT DEPARTMENT OF PUBLIC UTILITIES SEWER DIVISION, DATED 3-1-99
3. ALTA/ACSM LAND TITLE SURVEY; SURVEYOR CERTIFICATION BY AMERICAN NATIONAL DATED JUNE 1, 2011
4. SANITARY SEWER AND STORM DRAINAGE PLAN (DRAWING NO. C12) PREPARED BY BARTON MALOW COMPANY, OBTAINED FROM THE TOWN OF WALLINGFORD ENGINEERING DEPARTMENT.

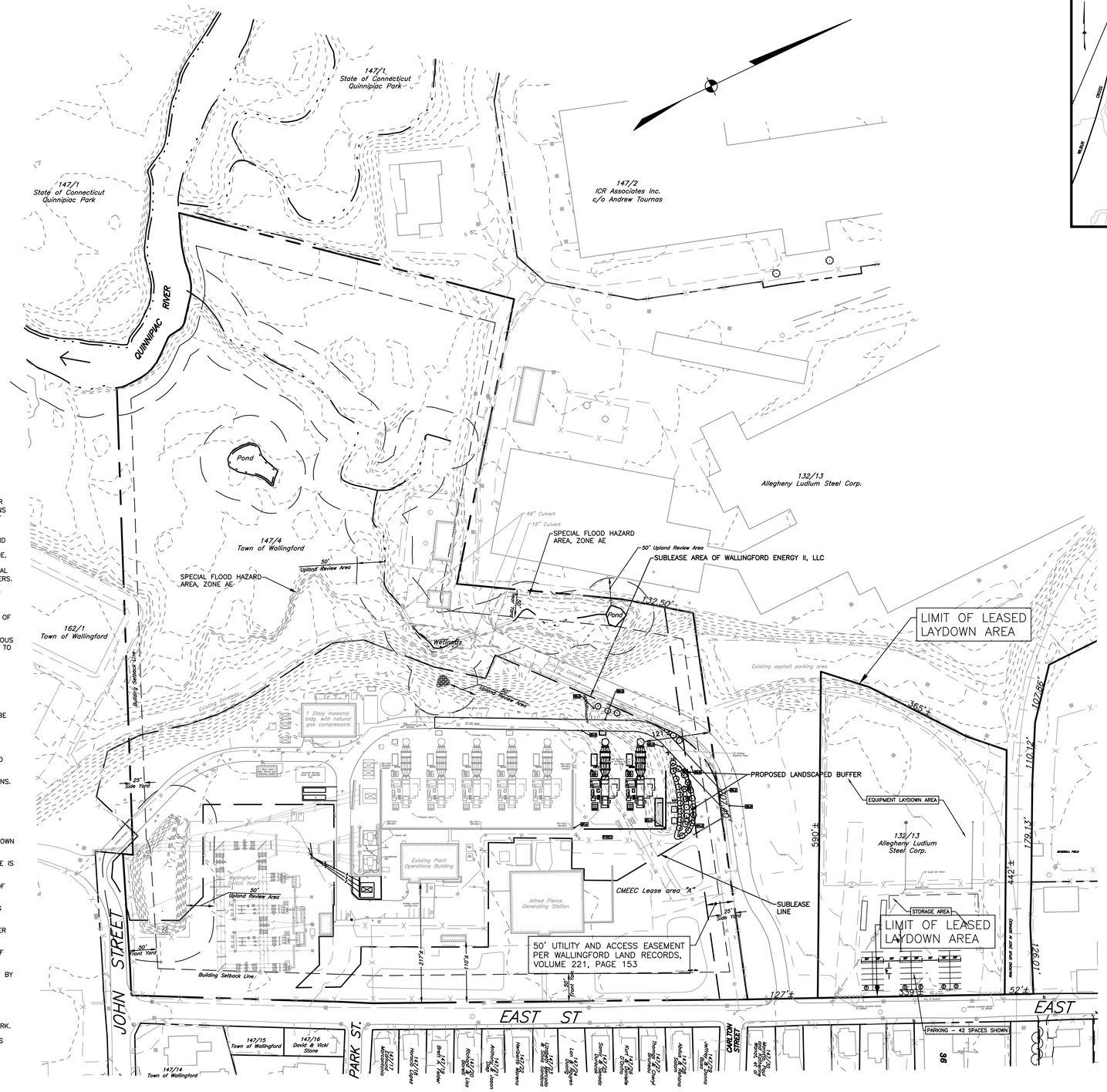

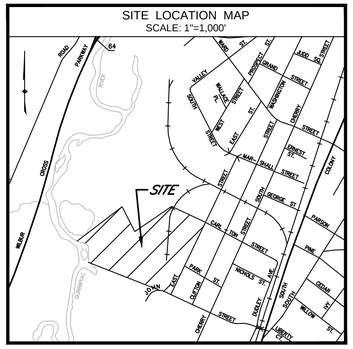

IMPORTANT NOTE:

ALL ABOVE AND BELOW GROUND IMPROVEMENTS ARE NOT SHOWN OR DEPICTED HEREON. ADDITIONAL UNDERGROUND UTILITIES MAY EXIST. PRIOR TO ANY EXCAVATION OR CONSTRUCTION, CONTACT: "CALL BEFORE YOU DIG" 1-800-922-4455

GODFREY/HOFFMAN ASSOCIATES, LLC
PROFESSIONAL LAND SURVEYORS & CIVIL ENGINEERS
26 BROADWAY NORTH HAVEN, CT 06473
TEL: 203.239.4217 FAX: 203.234.2088 WWW.GODFREYHOFFMAN.COM

STATE OF CONNECTICUT JAMES R. GODFREY No. 9687 PROFESSIONAL ENGINEER

NOT VALID WITHOUT LIVE SIGNATURE AND SEAL

ALL WORK, LABOR, AND MATERIALS TO BE IN STRICT ACCORDANCE WITH ALL APPLICABLE CODES AND LAW. IN THE EVENT OF ERRORS AND/OR OMISSIONS HEREIN, THE ARCHITECT/ENGINEER MUST BE NOTIFIED IMMEDIATELY TO ALLOW AN EXPRESSION OF PROFESSIONAL OPINION BY THE LAND ARCHITECT/ENGINEER. THESE DRAWINGS ARE TO BE USED FOR BEST HOME/SITE INFORMATION AND BELIEF AS SUCH IT CONFORMS TO THE CONSTRUCTION OF THIS HOME/SITE.

THE INFORMATION CONTAINED HEREIN IS THE PROPRIETARY AND CONFIDENTIAL PROPERTY OF GODFREY/HOFFMAN ASSOCIATES, LLC. THE REPRODUCTION OF GODFREY/HOFFMAN ASSOCIATES, LLC. PROPRIETARY INFORMATION WITHOUT THE WRITTEN PERMISSION BY GODFREY/HOFFMAN ASSOCIATES, LLC. IS PROHIBITED. ALL DRAWINGS MUST BEAR THE LIVE SIGNATURE AND SEAL OF A LICENSED PROFESSIONAL ARCHITECT/ENGINEER TO BE VALID AND ENFORCEABLE.

© COPYRIGHT 2015, ALL RIGHTS RESERVED

REVISION SCHEDULE

NO.	DATE	DESCRIPTION
1	08.22.2016	LEASE LAYDOWN AREA ADDED
2	09.02.2016	PROPOSED BUILDINGS REMOVED
3	09.08.2016	SWPCP

PROJECT:

FACILITY EXPANSION PROJECT

115 JOHN STREET
WALLINGFORD, CONNECTICUT

PREPARED FOR:

WALLINGFORD ENERGY II, LLC

400 CHESTERFIELD CENTER, SUITE 110
ST. LOUIS, MO 63017

OVERALL SITE PLAN

DRAWN BY:	JT
CHECKED BY:	JR
SCALE:	1"=100'
PROJECT:	15-011
DATE:	6/2/2015

C-1.0

SPECIAL FLOOD HAZARD AREA, ZONE AE

50' Upland Review Area

SPECIAL FLOOD HAZARD AREA, ZONE AE

50' Upland Review Area

132.50'

Pond

Wetlands

Existing Garage

1 Sty. bldg. w/DI water transfer pumps and DI tank heater circulating pumps.

Black Start Generator

Natural Gas Compressor Recycle Coolers (3)

Concrete Pad

Rip-Rap Outlet

50' Upland Review Area

Building Setback Line

Existing Driveway

Balance of Plant Auxiliary Transformer 13.8KV-480KV

Natural gas metering station blow-off vent

1 Story masonry bldg. with natural gas compressors

DI Water Storage Tank

BM Top Of Hydrant Nut Elevation=61.99

Monitoring Well, (typical)

Fire Hydrant

Metal beam guideroll

LIMIT OF NEW DRIVEWAY

PORTION OF EXISTING RIP-RAP SWALE TO BE REMOVED AT PROPOSED DRIVEWAY

EXISTING LEASE LINE

WED 5886 w/guy

BM Set X-Mark On Top Of Light Pole Base Elevation=60.88

PROPOSED BITUMINOUS CONCRETE PAVEMENT DRIVEWAY

20'

PORTION OF EXISTING WATER MAIN TO BE REMOVED

Bituminous driveway

Process stone

SNET 5683 w/guy

BM Nail Set In SNET #5683 Elevation=62.0

Existing Landscaped Berm

121'±

PROPOSED BOLLARDS (TYP)

PROPOSED HYDRANT

PROPOSED STANDPIPE CONNECTION

PROPOSED TURBINE (TYPICAL)

WED 7370

WED 7324

CEMS Gas Valve Concrete Pad

TW=110.7 BW=59.8 H=50.9'

TW=110.6 BW=60.2 H=50.4'

Hydrant

Standpipe Connection

1 Story metal bldg. Natural gas metering station

Ammonia Storage Tanks on Concrete Pad

Auxiliary Transformer 13.8KV-4.16KV

Standpipe Connection

Hydrant

RELOCATED DI WATER SYSTEM

PROPOSED SOUND WALL

PROPOSED GATE FOR EMERGENCY ACCESS

5.0'

707.90'

EXISTING HYDRANT AND STANDPIPE CONNECTION TO BE REMOVED

WED 4062 w/guy

Process stone

TW=110.7 BW=60.1

TW=110.7 BW=60.3

Auxiliary Transformer 13.8KV-480KV on Conc. pad

TW=110.7 BW=60.4

Waste water tank

Existing Drainage

PROPOSED AUXILIARY TRANSFORMERS

PROPOSED BOP SWITCHGEAR BUILDING (14'x50')

Step-up Transformer 115KV-13.8KV on Conc. pad (3)

Sound wall

Concrete Base

Wall

Concrete

Containment Wall

Elec. Box

Process Stone

Existing Plant Operations Building

Processed Stone

PROPOSED WASTE WATER TANK

EXISTING WASTE WATER TANK TO BE REMOVED AND RELOCATED

PROPOSED RELOCATED WATER MAINS

Existing Landscaped Berm

Gravel

Lawn

Existing Stormwater Detention Area Bot. el.=50.4±

Wallingford Switch Yard

PROPOSED OVERHEAD UTILITY LINES

Existing asphalt parking area

Lawn

Alfred Pierce Generating Station

25' Side Yard

50' Upland Review Area

Existing Control Building

Hydrant

BM Magnetic Nail Elevation=60.08

PORTION OF EXISTING SOUND WALL TO BE REMOVED

PROPOSED STEP UP TRANSFORMER 115KV – 13.8KV

PROPOSED SOUND WALL

217'±

110'±

50' UTILITY AND ACCESS EASEMENT PER WALLINGFORD LAND RECORDS, VOLUME 221, PAGE 153

Building Setback Line

Existing Landscaped Berm

50' Front Yard

25' Side Yard

50' Front Yard

Building Setback Line

127'±

JOHN STREET

EAST ST

PARK ST.

0 40 80 120

IMPORTANT NOTE:

ALL ABOVE AND BELOW GROUND IMPROVEMENTS ARE NOT SHOWN OR DEPICTED HEREON. ADDITIONAL UNDERGROUND UTILITIES MAY EXIST. PRIOR TO ANY EXCAVATION OR CONSTRUCTION, CONTACT: "CALL BEFORE YOU DIG" 1-800-922-4455

GODFREY/HOFFMAN ASSOCIATES, LLC
PROFESSIONAL LAND SURVEYORS & CIVIL ENGINEERS
26 BROADWAY NORTH HAVEN, CT 06473
TEL: 203.239.4217 FAX: 203.234.2088 WWW.GODFREYHOFFMAN.COM

STATE OF CONNECTICUT JAMES R. VERSHAY No. 15687 PROFESSIONAL ENGINEER

IT IS VALID WITHOUT LIVE SIGNATURE AND SEAL

ALL WORK, LABOR, AND MATERIALS TO BE IN STRICT ACCORDANCE WITH ALL APPLICABLE CODES AND LAW IN THIS JURISDICTION. NOTIFY ENGINEER IMMEDIATELY IN THE EVENT OF ERRORS AND/OR OMISSIONS HEREIN.

THIS DOCUMENT IS INSTRUMENT OF PROFESSIONAL SERVICE AND IS NOT AN EXPRESSION OF PROFESSIONAL OPINION BY THE LAND SURVEYOR OR ENGINEER. THE INFORMATION IS TO BE USED TO THE BEST OF THEIR KNOWLEDGE, INFORMATION, AND BELIEF AS SUCH IT IS SUBJECT TO CHANGE WITHOUT FURTHER NOTICE.

THE INFORMATION CONTAINED HEREIN, IS THE PROPRIETARY AND CONFIDENTIAL PROPERTY OF GODFREY-HOFFMAN ASSOCIATES, LLC. ANY REPRODUCTION OR DISTRIBUTION REQUIRES THE WRITTEN PERMISSION OF GODFREY-HOFFMAN ASSOCIATES, LLC. ONLY PRINTED COPIES BEARING THE SIGNATURE AND SEAL ARE VALID ONLY IF THEY BEAR THE LIVE SIGNATURE AND SEAL OF THE LICENSED PROFESSIONAL ENGINEER.

© COPYRIGHT 2015, ALL RIGHTS RESERVED

REVISION SCHEDULE

NO.	DATE	DESCRIPTION
1	08.22.2015	SWITCHGEAR BLDG. LOCATION
2	09.02.2015	PROPOSED BUILDINGS REMOVED

PROJECT:

FACILITY EXPANSION PROJECT

115 JOHN STREET
WALLINGFORD, CONNECTICUT

PREPARED FOR:

WALLINGFORD ENERGY II, LLC

400 CHESTERFIELD CENTER, SUITE 110
ST. LOUIS, MO 63017

SITE PLAN

DRAWN BY:	JT
CHECKED BY:	JR
SCALE:	1"=40'
PROJECT:	15-011
DATE:	6/2/2015

C-1.1

PLANT LIST

SYM	QTY	BOTANICAL NAME	COMMON NAME	ROOT	SIZE	COMMENTS
TREES						
PP	16	Picea pungens 'Glauca'	Colorado Blue Spruce	B&B	8' – 10' Ht.	Full, Nicely Shaped
PS	16	Pinus strobus	White Pine	B&B	8' – 10' Ht.	Full, Nicely Shaped

SOIL CHART

POST CONSTRUCTION SOIL CONDITION	TYPE OF PREPARATION
GOOD SOIL	LOOSEN EXISTING SOIL
COMPACTED SOIL	LOOSEN EXISTING SOIL, ADD COMPOSTED ORGANIC MATTER TO BRING ORGANIC CONTENT TO 5% DRY WEIGHT
CLAY CONTENT 5–35%	LOOSEN EXISTING SOIL, ADD ORGANIC MATTER TO BRING ORGANIC CONTENT TO 5% DRY WEIGHT
SANDY LOAM SOILS	ADD CLEAN COMPOSTED ORGANIC MATERIAL (20% MAX BY VOLUME) TO THE EXISTING SOIL
POOR QUALITY, HEAVY CLAY SOIL	REMOVE EXISTING SOIL, ADD LOAM TOPSOIL

PLANTING NOTES:

1. ALL PLANT MATERIAL MUST MEET AMERICAN NURSERY AND LANDSCAPE ASSOCIATION (ANLA) STANDARDS FOR NURSERY STOCK. CONTRACTOR SHALL SUBMIT REPRESENTATIVE NURSERY PHOTOS OF PROPOSED PLANTINGS FOR APPROVAL PRIOR TO PURCHASE AND INSTALLATION. ANY PLANT MATERIAL NOT MEETING STANDARDS WILL BE REMOVED AND REPLACED AT NO ADDITIONAL COST TO OWNER.

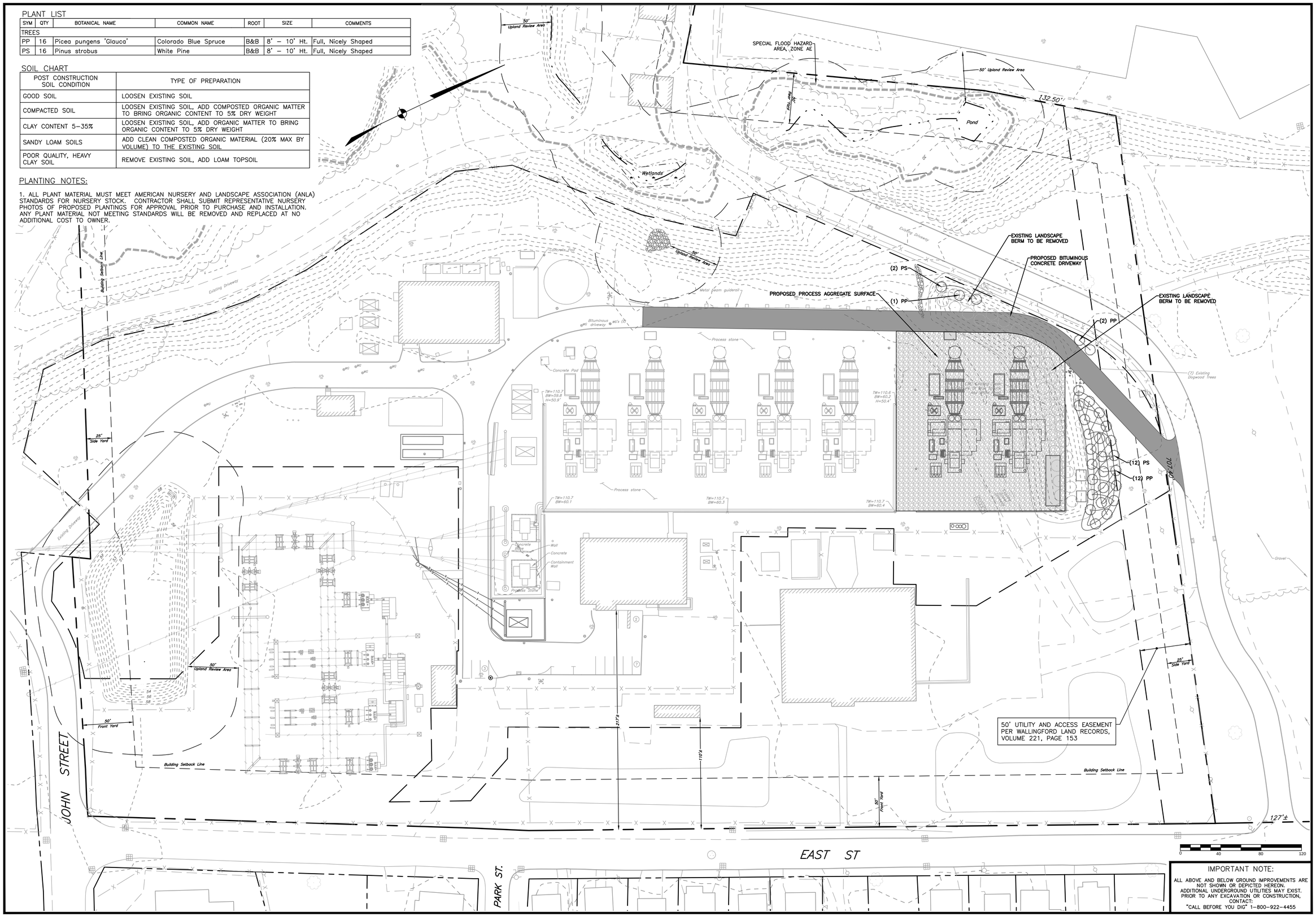

IMPORTANT NOTE:

ALL ABOVE AND BELOW GROUND IMPROVEMENTS ARE NOT SHOWN OR DEPICTED HEREON. ADDITIONAL UNDERGROUND UTILITIES MAY EXIST. PRIOR TO ANY EXCAVATION OR CONSTRUCTION, CONTACT: "CALL BEFORE YOU DIG" 1–800–922–4455

GODFREY/HOFFMAN ASSOCIATES, LLC
PROFESSIONAL LAND SURVEYORS & CIVIL ENGINEERS
26 BROADWAY NORTH HAVEN, CT 06473
TEL: 203.239.4217 FAX: 203.234.2088 WWW.GODFREYHOFFMAN.COM

STATE OF CONNECTICUT JAMES R. GODFREY No. 9687 PROFESSIONAL ENGINEER

IT IS VALID WITHOUT LIVE SIGNATURE AND SEAL

ALL WORK, LABOR, AND MATERIALS TO BE IN STRICT ACCORDANCE WITH ALL APPLICABLE CODES AND LAWS IN THE STATE OF CONNECTICUT. NOTIFY ENGINEER IMMEDIATELY IN THE EVENT OF ERRORS AND/OR OMISSIONS HEREIN.

THE INFORMATION CONTAINED HEREIN IS THE PROPERTY OF GODFREY-HOFFMAN ASSOCIATES, LLC. IT IS PROVIDED TO BE AN IMPRESSION OF PROFESSIONAL OPINION BY THE LAND SURVEYOR/CIVIL ENGINEER BASED ON INFORMATION TO THE BEST OF HIS KNOWLEDGE, INFORMATION, AND BELIEF AS SUCH IT PERTAINS TO THE PROPOSED DEVELOPMENT.

THE INFORMATION CONTAINED HEREIN IS THE PROPRIETARY AND CONFIDENTIAL PROPERTY OF GODFREY-HOFFMAN ASSOCIATES, LLC. ANY REPRODUCTION OF GODFREY-HOFFMAN ASSOCIATES, LLC. PROPRIETARY INFORMATION IS PROHIBITED WITHOUT WRITTEN PERMISSION. IF GODFREY-HOFFMAN ASSOCIATES, LLC. PROPRIETARY INFORMATION IS REQUIRED TO BE REPRODUCED, THE REPRODUCED COPIES MUST BEAR THE LEGEND, SIGNATURE AND SEAL OF THE LICENSED PROFESSIONAL ENGINEER OR LICENSED PROFESSIONAL LAND SURVEYOR.

© COPYRIGHT 2015, ALL RIGHTS RESERVED

REVISION SCHEDULE

NO.	DATE	DESCRIPTION
1	06.01.2015	PROPOSED BUILDINGS REMOVED

PROJECT:

FACILITY EXPANSION PROJECT

115 JOHN STREET
WALLINGFORD, CONNECTICUT

PREPARED FOR:

WALLINGFORD ENERGY II, LLC

400 CHESTERFIELD CENTER, SUITE 110
ST. LOUIS, MO 63017

PROPOSED LANDSCAPE PLAN

DRAWN BY:	JT
CHECKED BY:	JR
SCALE:	1"=40'
PROJECT:	15-011
DATE:	6/2/2015

C-1.2

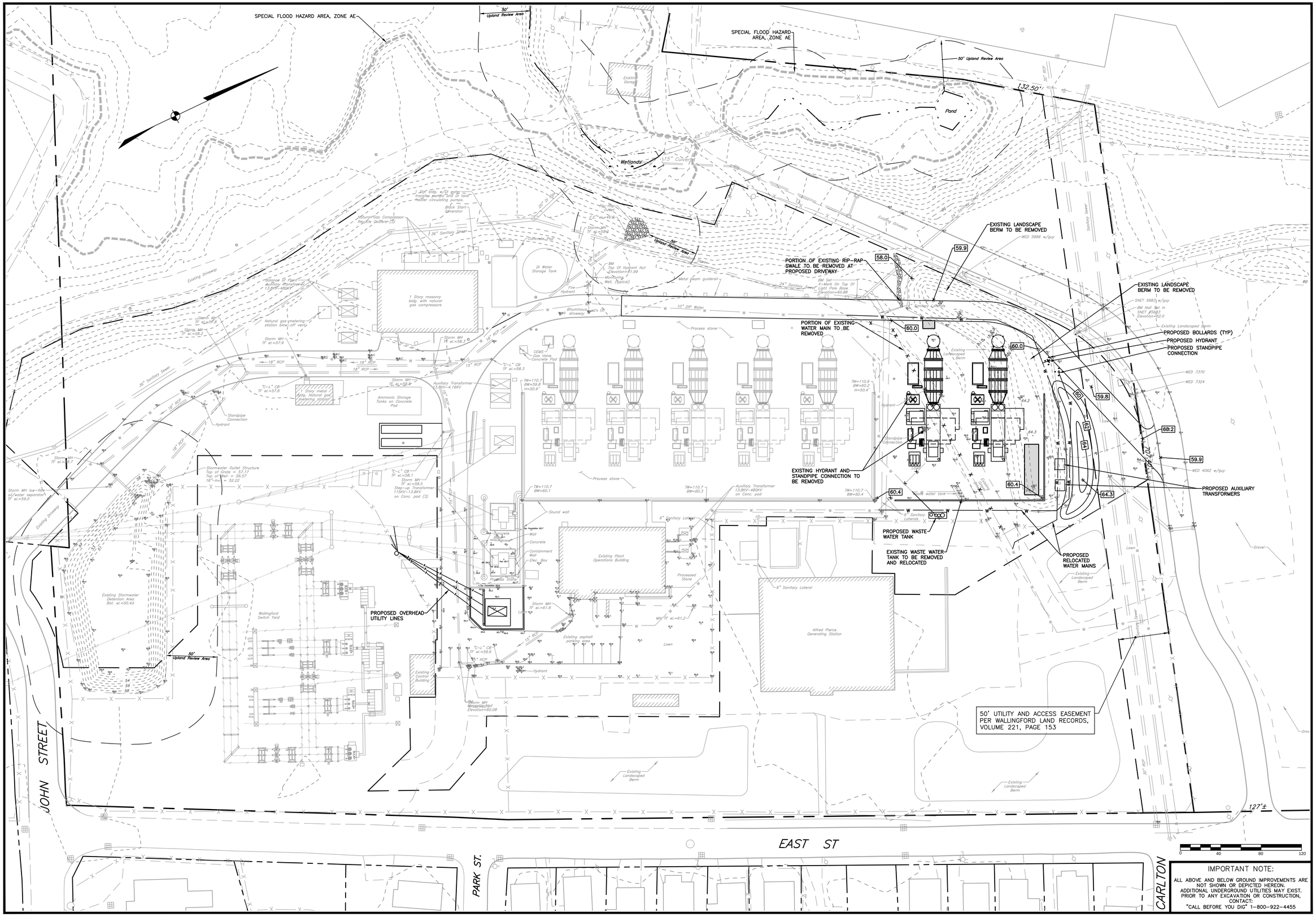

IMPORTANT NOTE:

ALL ABOVE AND BELOW GROUND IMPROVEMENTS ARE NOT SHOWN OR DEPICTED HEREON. ADDITIONAL UNDERGROUND UTILITIES MAY EXIST. PRIOR TO ANY EXCAVATION OR CONSTRUCTION, CONTACT: "CALL BEFORE YOU DIG" 1-800-922-4455

GODFREY HOFFMAN ASSOCIATES, LLC
PROFESSIONAL LAND SURVEYORS & CIVIL ENGINEERS
26 BROADWAY NORTH HAVEN, CT 06473
TEL: 203.239.4217 FAX: 203.234.2088 WWW.GODFREYHOFFMAN.COM

STATE OF CONNECTICUT
JAMES P. ROTONDO
No. 17057
LICENSED PROFESSIONAL ENGINEER

NOT VALID WITHOUT LIVE SIGNATURE AND SEAL

ALL WORK, LABOR, AND MATERIALS TO BE IN STRICT ACCORDANCE WITH ALL APPLICABLE CODES AND LAWS WHICH SHALL TAKE PRECEDENCE OVER THESE DRAWINGS IN THE EVENT OF ERRORS AND/OR OMISSIONS HEREIN.

THE WORD "CERTIFY" OR "DECLARE" IS UNDERSTOOD TO BE AN EXPRESSION OF PROFESSIONAL OPINION BY THE LAND SURVEYOR AND/OR ENGINEER WHICH IS BASED ON THEIR BEST KNOWLEDGE, INFORMATION AND BELIEF AS SUCH IT CONSTITUTES NEITHER A GUARANTEE OR WARRANTY.

THE INFORMATION CONTAINED HEREIN IS THE PROPRIETARY AND CONFIDENTIAL PROPERTY OF GODFREY-HOFFMAN ASSOCIATES, LLC. REPRODUCTIONS, PUBLICATION, DISTRIBUTION, OR DUPLICATION IN WHOLE OR IN PART REQUIRES THE WRITTEN PERMISSION OF GODFREY-HOFFMAN ASSOCIATES, LLC. THIS DOCUMENT AND COPIES THEREOF ARE VALID ONLY IF THEY BEAR THE LIVE SIGNATURE AND LIVE SEAL OF THE DESIGNATED LICENSED PROFESSIONAL.

© COPYRIGHT 2015, ALL RIGHTS RESERVED

REVISION SCHEDULE

NO.	DATE	DESCRIPTION
1	8/22/2016	PER TOWN COMMENTS
2	09.02.2016	PROPOSED BUILDINGS REMOVED
3	09.06.2016	SWPCP

PROJECT:

FACILITY EXPANSION PROJECT

115 JOHN STREET
WALLINGFORD, CONNECTICUT

PREPARED FOR:

WALLINGFORD ENERGY II, LLC

400 CHESTERFIELD CENTER, SUITE 110
ST. LOUIS, MO 63017

GRADING & UTILITY PLAN

DRAWN BY:	JT
CHECKED BY:	JR
SCALE:	1"=40'
PROJECT:	15-011
DATE:	6/2/2015

C-2.0

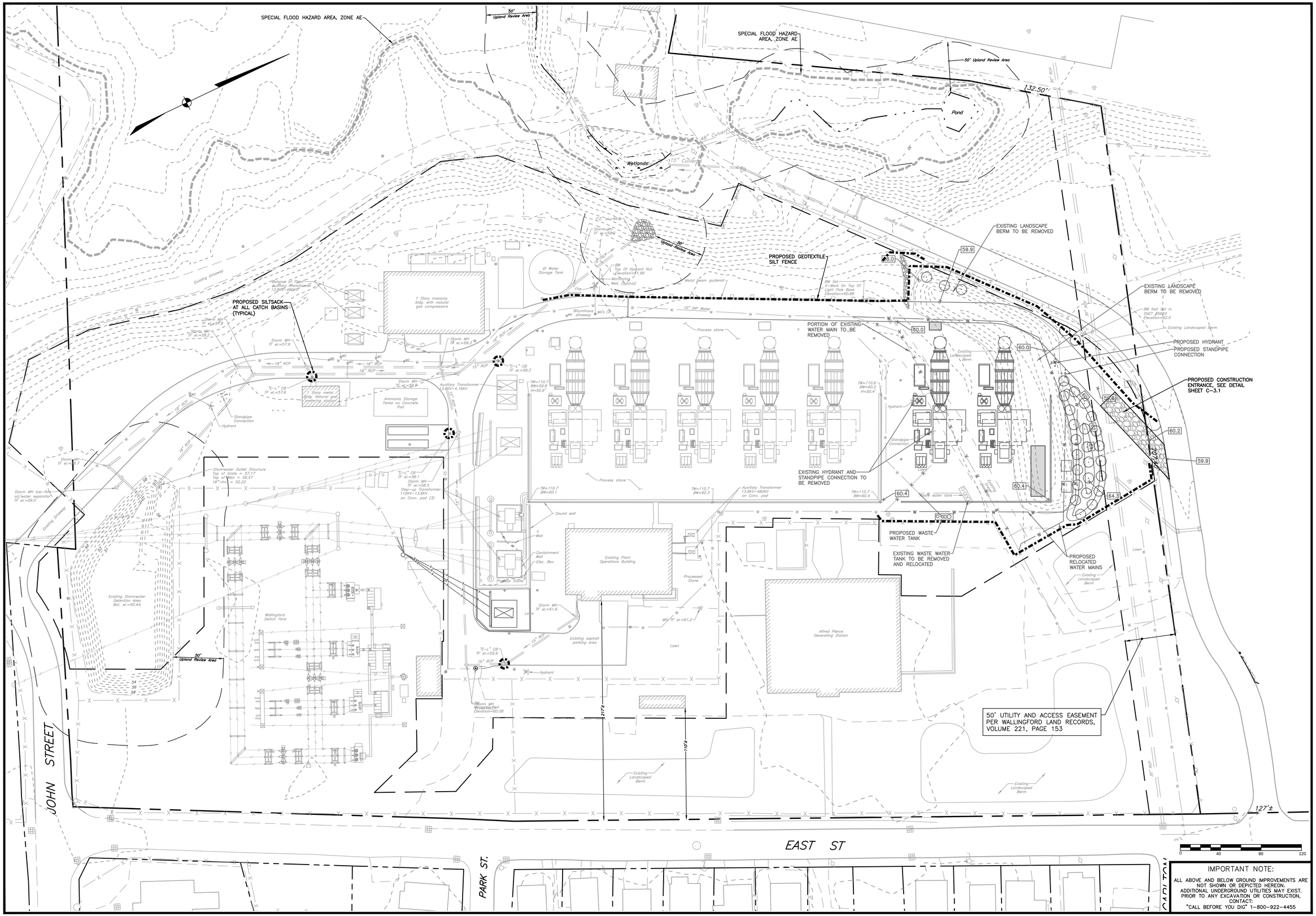

GODFREY/HOFFMAN ASSOCIATES, LLC
PROFESSIONAL LAND SURVEYORS & CIVIL ENGINEERS
26 BROADWAY NORTH HAVEN, CT 06473
TEL: 203.239.4217 FAX: 203.234.2088 WWW.GODFREYHOFFMAN.COM

STATE OF CONNECTICUT — JAMES A. RUSSO — No. 18487 — PROFESSIONAL ENGINEER

NOT VALID WITHOUT LIVE SIGNATURE AND SEAL

ALL WORK, LABOR, AND MATERIALS TO BE IN STRICT ACCORDANCE WITH ALL APPLICABLE CODES AND LAW IN THE STATE OF CONNECTICUT. ANY DEVIATION MUST BE IN WRITING IN EVENT OF ERRORS AND/OR OMISSIONS HEREIN.

THE INFORMATION CONTAINED HEREIN IS TO BE INTERPRETED AS AN EXPRESSION OF PROFESSIONAL OPINION BY THE LAND SURVEYOR WHO PREPARED IT AND IS BASED ON HIS KNOWLEDGE, BEST KNOWN SOURCE OF INFORMATION, AND BELIEF AS SUCH IT IS NOT A GUARANTEE OF PERFORMANCE OR RESULTS.

THE INFORMATION CONTAINED HEREIN IS THE PROPRIETARY AND CONFIDENTIAL PROPERTY OF GODFREY-HOFFMAN ASSOCIATES, LLC. ANY REPRODUCTION OR DISTRIBUTION, EITHER IN WHOLE OR IN PART, WITHOUT PERMISSION IN WRITING IS REQUIRED TO BE GIVEN BY GODFREY-HOFFMAN ASSOCIATES, LLC. THE INFORMATION CONTAINED HEREIN IS TO BE USED ONLY FOR THE SITE SHOWN HEREON AND ARE VALID ONLY IF THEY BEAR THE LIVE SIGNATURE AND SEAL OF A LICENSED PROFESSIONAL ENGINEER.

© COPYRIGHT 2015, ALL RIGHTS RESERVED

REVISION SCHEDULE

NO.	DATE	DESCRIPTION
1	06.22.2015	ADJUST SILT FENCE LOCATION
2	08.22.2015	PER TOWN COMMENTS
3	09.02.2015	PROPOSED BUIDLINGS REMOVED
4	09.08.2015	SWPCP

PROJECT:

FACILITY EXPANSION PROJECT

115 JOHN STREET
WALLINGFORD, CONNECTICUT

PREPARED FOR:

WALLINGFORD ENERGY II, LLC

400 CHESTERFIELD CENTER, SUITE 110
ST. LOUIS, MO 63017

SOIL EROSION & SEDIMENTATION CONTROL PLAN

DRAWN BY:	JT
CHECKED BY:	JR
SCALE:	1"=40'
PROJECT:	15-011
DATE:	6/2/2015

C-3.0

IMPORTANT NOTE:

ALL ABOVE AND BELOW GROUND IMPROVEMENTS ARE NOT SHOWN OR DEPICTED HEREON. ADDITIONAL UNDERGROUND UTILITIES MAY EXIST. PRIOR TO ANY EXCAVATION OR CONSTRUCTION, CONTACT:
"CALL BEFORE YOU DIG" 1-800-922-4455

GENERAL NOTES:

1. HAYBALE FILTERS OR SILTATION FENCE WILL BE INSTALLED AT ALL CULVERT OUTLETS AND ALONG THE TOE OF ALL CRITICAL CUT AND FILL SLOPES.
2. CULVERT DISCHARGE AREAS WILL BE PROTECTED WITH RIPRAP CHANNELS; ENERGY DISSIPATORS WILL BE PROVIDED AS NECESSARY.
3. CATCH BASINS WILL BE PROTECTED WITH HAYBALE FILTERS OR SILTATION FENCE THROUGHOUT THE CONSTRUCTION PERIOD AND UNTIL ALL DISTURBED AREAS ARE THOROUGHLY STABILIZED.
4. ALL EROSION AND SEDIMENTATION CONTROL MEASURES WILL BE CONSTRUCTED IN ACCORDANCE WITH THE STANDARDS AND SPECIFICATIONS OF THE CONNECTICUT EROSION & SEDIMENT CONTROL HANDBOOK.
5. EROSION AND SEDIMENT CONTROL MEASURES WILL BE INSTALLED PRIOR TO CONSTRUCTION WHENEVER POSSIBLE.
6. ALL CONTROL MEASURES WILL BE MAINTAINED IN EFFECTIVE CONDITION THROUGHOUT THE CONSTRUCTION PERIOD.
7. ADDITIONAL CONTROL MEASURES WILL BE INSTALLED DURING THE CONSTRUCTION PERIOD, IF NECESSARY OR REQUIRED.
8. SEDIMENT REMOVED FROM CONTROL STRUCTURES WILL BE DISPOSED OF IN A MANNER WHICH IS CONSISTENT WITH THE INTENT OF THE PLAN.
9. CONTRACTOR IS ASSIGNED THE RESPONSIBILITY FOR IMPLEMENTING THIS EROSION AND SEDIMENT CONTROL PLAN. THIS RESPONSIBILITY INCLUDES THE INSTALLATION AND MAINTENANCE OF CONTROL MEASURES, INFORMING ALL PARTIES ENGAGED ON THE CONSTRUCTION SITE OF THE REQUIREMENTS AND OBJECTIVES OF THE PLAN, NOTIFYING THE CITY LAND USE OFFICE OF ANY TRANSFER OF THIS RESPONSIBILITY, AND FOR CONVEYING A COPY OF THE EROSION AND SEDIMENT CONTROL PLAN IF THE TITLE TO THE LAND IS TRANSFERRED.
10. AFFECTED PORTIONS OF OFF-SITE ROADS MUST BE SWEPT CLEAN WHEN REQUIRED OR AT LEAST ONCE A WEEK DURING CONSTRUCTION. DUST CONTROL TO BE ACHIEVED WITH COVERING TRUCK LOADS, SWEEPING ROADS, WATERING AS REQUIRED, OR AS ORDERED BY THE SITE ENGINEER.
11. BRUSH SHALL BE CHIPPED AND REMOVED FROM SITE. GRIND STUMPS OR TRANSPORT OFF- SITE; DO NOT BURY. TOPSOIL FROM DISTURBED AREAS SHALL BE STRIPPED AND STOCKPILED FOR USE IN FINAL LANDSCAPING.
12. AFTER EACH STORM EVENT OR ONCE WEEKLY, ALL SEDIMENT AND EROSION CONTROLS WILL BE INSPECTED. ANY CORRECTIVE ACTIONS TO MITIGATE ENVIRONMENTAL CONCERNS WILL BE ORDERED BY THE SITE ENGINEER OR SITE E&S CONTROL MONITOR.
13. ALL PERMANENT AND TEMPORARY SEDIMENT CONTROL DEVICES WILL BE MAINTAINED IN EFFECTIVE CONDITION UNTIL ALL UPLAND AREAS ARE FULLY STABILIZED. UPON COMPLETION OF WORK, ALL TEMPORARY SEDIMENT CONTROL DEVICES SUCH AS SILT FENCE AND HAYBALES SHOULD BE REMOVED FROM THE SITE AND SEDIMENT REMOVED FROM ALL ON-SITE CATCH BASINS AND DISPOSED OF LEGALLY.
14. NO CONSTRUCTION OR CONSTRUCTION EQUIPMENT WILL BE ALLOWED ON THE DOWNHILL SIDE OF THE SILT FENCE AS SHOWN ON PLANS, EXCEPT DURING CONSTRUCTION OF ANY ITEMS SHOWN DOWNHILL OF SILT FENCE.

SEQUENCE OF OPERATIONS:

1. FLAG LIMITS OF CONSTRUCTION. SCHEDULE PRE-CONSTRUCTION MEETING WITH REPRESENTATIVES OF THE OWNER, CONTRACTOR, ENGINEER AND LOCAL AUTHORITY.
2. HOLD PRE-CONSTRUCTION MEETING PRIOR TO ANY SITE DISTURBANCE. REVIEW EROSION CONTROL PLAN AND DISCUSS SCHEDULING OF SITE INSPECTIONS DURING CONSTRUCTION ACTIVITIES.
3. INSTALL CONSTRUCTION ENTRANCE.
4. INSTALL PERIMETER EROSION AND SEDIMENTATION CONTROLS IN ACCORDANCE WITH THE E&S CONTROL PLAN.
5. BEGIN EXCAVATION AND CONSTRUCTION OF FILL EMBANKMENTS. ESTABLISH SUB-GRADE ELEVATIONS FOR TOPSOIL AREAS AND ROADWAYS AS REQUIRED AND PREPARE BUILDING AND TURBINE PADS.
6. BEGIN BUILDING AND TURBINE CONSTRUCTION.
7. INSTALL UNDERGROUND UTILITIES (SANITARY, WATER SERVICE, STORM DRAIN SYSTEM AND OTHER UTILITIES) TO WITHIN 5 FEET OF THE BUILDING.
8. PREPARE SUB-BASE, SLOPES, DRIVEWAY AREAS AND OTHER AREAS OF DISTURBANCE FOR FINAL GRADING.
9. INSTALL DRIVEWAY AREA BASE MATERIALS AND COMPACT.
10. PLACE TOPSOIL WHERE REQUIRED. COMPLETE PERIMETER LANDSCAPING.
11. UPON SUBSTANTIAL COMPLETION OF THE BUILDING, COMPLETE THE BALANCE OF THE SITE WORK AND STABILIZATION OF ALL OTHER DISTURBED AREAS. INSTALL FIRST COURSE OF PAVING.
12. WHEN ALL OTHER WORK HAS BEEN COMPLETED, REPAIR AND SWEEP ALL PAVED AREAS FOR THE FINAL COURSE OF PAVING. INSPECT THE DRAINAGE SYSTEM AND CLEAN AS NEEDED.
13. INSTALL FINAL COURSE OF PAVEMENT.
14. AFTER SITE IS STABILIZED REMOVE TEMPORARY EROSION AND SEDIMENT CONTROLS.

OPERATION & MAINTENANCE OF EROSION AND SEDIMENTATION CONTROL MEASURES

1. SILTATION FENCE

1.1. ALL SILTATION FENCES SHALL BE INSPECTED AFTER EACH RAINFALL. ALL DETERIORATED FABRIC AND DAMAGED POSTS SHALL BE REPLACED AND PROPERLY REPOSITIONED IN ACCORDANCE WITH THIS PLAN.

1.2. SEDIMENT DEPOSITS SHALL BE REMOVED FROM BEHIND THE FENCE WHEN THEY EXCEED A HEIGHT OF ONE FOOT.

2. HAYBALES

2.1. ALL HAYBALE RINGS SHALL BE INSPECTED FOLLOWING EACH RAINFALL. REPAIR OR REPLACEMENT SHALL BE PROMPTLY MADE AS NEEDED.

2.2. DEPOSITS SHALL BE REMOVED AND CLEANED-OUT IF ONE HALF OF THE ORIGINAL HEIGHT OF THE BALES BECOMES FILLED WITH SEDIMENT.

CONTINGENCY EROSION PLAN:

SHOULD UNFORESEEN EROSION OR SEDIMENTATION PROBLEMS ARISE, THE DESIGN ENGINEER OF RECORD AND LOCAL ENFORCEMENT AGENT SHALL BE NOTIFIED IMMEDIATELY. AN INSPECTION OF THE AFFECTED AREA(S) SHALL BE PROMPTLY PERFORMED. A REMEDIAL ACTION PLAN SHALL BE FORMULATED WITH THE LOCAL ENFORCEMENT AGENT'S APPROVAL. THE SITE CONTRACTOR SHALL THEN IMPLEMENT THE RECOMMENDED COURSE OF ACTION WHICH HAS BEEN DETERMINED BY BOTH THE ENGINEER AND LOCAL ENFORCEMENT AGENT.

DUST CONTROL:

THE CONTRACTOR SHALL PROVIDE DUST CONTROL THROUGHOUT THE PROJECT UNTIL SUCH TIME AS ALL DISTURBED AREAS HAVE BEEN STABILIZED. THE CONTRACTOR SHALL UTILIZE METHODS ACCEPTABLE TO THE TOWN ENVIRONMENTAL ENFORCEMENT OFFICER. THE FOLLOW OPERATIONS SHALL BE PERFORMED AS A MINIMUM:

1. PERIODICALLY MOISTEN EXPOSED SOIL AREAS WITH WATER ON UNPAVED SURFACES.
2. USE OF MECHANICAL SWEEPING ON PAVED AREAS WHERE DUST AND FINE MATERIALS ACCUMULATE AS A RESULT OF TRUCK TRAFFIC, PAVEMENT SAW CUTTING SPILLAGE, AND WIND OR WATER DEPOSITION FROM ADJACENT DISTURBED AREAS. SWEEP DAILY IN HEAVILY TRAFFICKED AREAS OR AS WARRANTED.
3. REPEAT APPLICATION OF DUST CONTROL MEASURES WHEN DUST CONDITIONS BECOME EVIDENT.

TOPSOIL (TO)

MATERIALS:

TOPSOIL SHALL INCLUSIVELY MEAN A SOIL:

MEETING ONE OF THE FOLLOWING SOIL TEXTURES CLASSED ESTABLISHED BY THE USDA CLASSIFICATION SYSTEM BASED UPON THE PROPORTION OF SAND, SILT AND CLAY SIZE PARTICLES AFTER PASSING A 2 MM SIEVE AND SUBJECTED TO A PARTICLE SIZE ANALYSIS: LOAMY SAND, INCLUDING COARSE, LOAMY FINE, AND LOAMY VERY FINE SAND, SANDY LOAM, INCLUDING COARSE, FINE AND VERY FINE SANDY LOAM, LOAM, OR SILT LOAM WITH NOT MORE THAN 60% SILT; CONTAINING NOT LESS THAN 6% AND NOT MORE THAN 20% ORGANIC MATTER AS DETERMINED BY LOSS-ON-IGNITION OF OVEN DRIED SAMPLES DRIED AT 105 DEGREES CENTIGRADE; POSSESSING A PH RANGE OF 6.0-7.5, EXCEPT IF THE VEGETATIVE PRACTICE BEING USED SPECIFICALLY REQUIRES A LOWER PH, THEN THE PH MAY BE ADJUSTED ACCORDINGLY; HAVING SOLUBLE SALTS NOT EXCEEDING 500 PPM, AND THAT IS LOOSE AND FRIABLE AND FREE FROM REFUSE, STUMPS, ROOTS, BRUSH, WEEDS, FROZEN PARTICLES, ROCKS AND STONES OVER 1 ¼" IN DIAMETER, AND ANY MATERIAL THAT WILL PREVENT THE FORMATION OF A SUITABLE SEEDBED AND PREVENT SEED GERMINATION AND PLANT GROWTH. TOPSOIL MAY OF NATURAL ORIGIN OR MANUFACTURED BY BLENDING COMPOSTED ORGANIC MATERIALS WITH ORGANIC DEFICIENT SOILS, MINERAL SOILS, SAND AND LIME SUCH THAT THE RESULTING SOIL MEETS THE MATERIAL SPECIFICATIONS ABOVE.

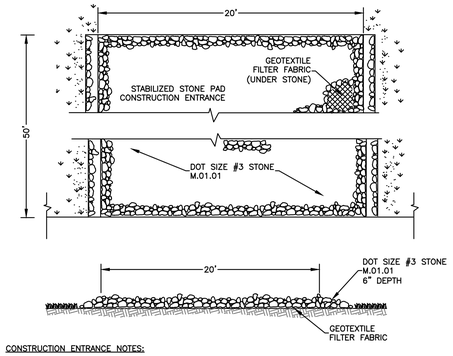

CONSTRUCTION ENTRANCE NOTES:

1. MATERIALS

1.1. STONE: USE ANGULAR STONE SIZED ACCORDING TO THE STANDARDS SET BY ASTM C-33, SIZE NO. 2 OR 3, OR DOT STANDARD SPECIFICATIONS SECTION M.01.01, SIZE #3.

1.2. GEOTEXTILE: FIBERS USED IN THE GEOTEXTILE SHALL CONSIST OF SYNTHETIC POLYMERS COMPOSED OF AT LEAST 85% BY WEIGHT POLYPROPYLENES, POLYESTERS, AND POLYAMIDES, POLYETHYLENE, POLYOLEFINS, OR POLYVINYLIDENE-CHLORIDES. THE FIBERS SHALL BE FORMED IN A STABLE NETWORK OF FILAMENDS OR YARNS RETAINING DIMENSIONAL STABILITY RELATIVE TO EACH OTHER. THE GEOTEXTILE USED SHALL BE SPECIFICALLY INTENDED FOR "ROAD STABILIZATION" APPLICATIONS AND SHALL BE CONSISTENT WITH THE MANUFACTURER'S RECOMMENDATIONS FOR THE INTENDED USE.

2. DIMENSIONS SHALL BE AS INDICATED ON THE DETAIL

3. CONSTRUCTION: CLEAR THE AREA OF THE ENTRANCE OF ALL VEGETATION, ROOTS, AND OTHER OBJECTIONABLE MATERIAL. AT POORLY DRAINED LOCATIONS INSTALL SUBSURFACE DRAINAGE INSURING THE OUTLETS TO THE DRAINS ARE FREE-FLOWING. IF USING GEOTEXTILE IN PLACE OF A FREE DRAINING MATERIAL, UNROLL THE GEOTEXTILE IN A DIRECTION PARALLEL TO THE ROADWAY CENTERLINE IN A LOOSE MANNER PERMITTING IT TO CONFORM TO THE SURFACE IRREGULARITIES WHEN THE STONE IS PLACED. THE GEOTEXTILE MAY BE TEMPORARILY SECURED WITH PINS RECOMMENDED OR PROVIDED BY THE MANUFACTURER BUT THEY SHALL BE REMOVED PRIOR TO PLACEMENT OF THE STONE. PLACE THE STONE TO THE SPECIFIED DIMENSIONS. KEEP ADDITIONAL; STONE AVAILABLE OR STOCKPILE OF FUTURE USE.

4. MAINTENANCE: MAINTAIN THE ENTRANCE IN A CONDITION WHICH WILL PREVENT TRACKING AND WASHING OF THE SEDIMENT ONTO PAVED SURFACES. PROVIDE PERIODIC TOP DRESSING WITH ADDITIONAL STONE OR ADDITIONAL LENGTH AS CONDITIONS DEMAND. ROADS ADJACENT TO THE CONSTRUCTION SITE SHALL BE LEFT CLEAN AT THE END OF EACH DAY. IF THE CONSTRUCTION ENTRANCE IS BEING PROPERLY MAINTAINED AND THE ACTION OF A VEHICLE TRAVELING OVER THE STONE PAD IS NOT SUFFICIENT TO REMOVE THE MAJORITY OF THE SEDIMENT, THEN EITHER (1) INCREASE THE LENGTH OF THE CONSTRUCTION ENTRANCE, OR (2) MODIFY THE CONSTRUCTION ACCESS ROAD SURFACE, OR (3) INSTALL WASHING RACKS AND ASSOCIATED SETTLING AREA OR SIMILAR DEVICES BEFORE THE VEHICLE ENTERS PAVED SURFACES.

CONSTRUCTION ENTRANCE

NOT TO SCALE

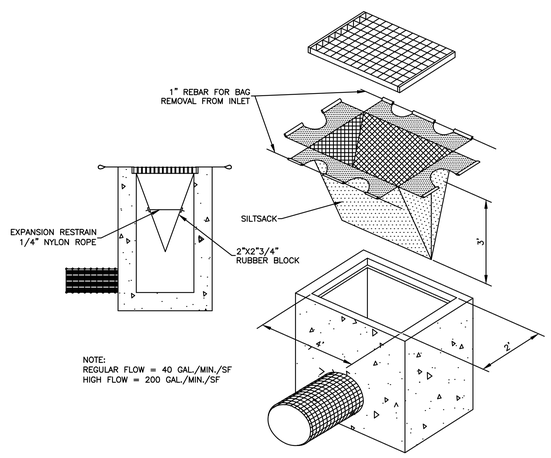

SILTSACK DETAIL

NOT TO SCALE

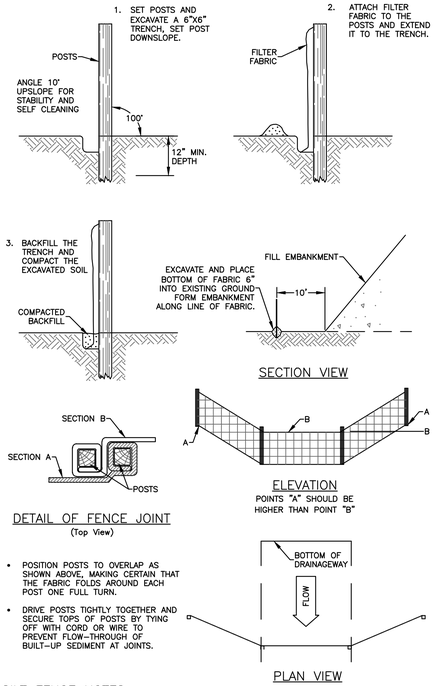

- POSITION POSTS TO OVERLAP AS SHOWN ABOVE, MAKING CERTAIN THAT THE FABRIC FOLDS AROUND EACH POST ONE FULL TURN.
- DRIVE POSTS TIGHTLY TOGETHER AND SECURE TOPS OF POSTS BY TYING OFF WITH CORD OR WIRE TO PREVENT FLOW-THROUGH OF BUILT-UP SEDIMENT AT JOINTS.

SILT FENCE NOTES:

MATERIALS:

GEOTEXTILE FABRIC:
GEOTEXTILE FABRIC SHALL BE A PERVIOUS SHEET OF POLYPROPYLENE, NYLON, POLYESTER, ETHYLENE OR SIMILAR FILAMENTS AND SHALL CONFORM TO THE FOLLOWING REQUIREMENTS:

PHYSICAL PROPERTY	TEST METHOD	MINIMUM REQUIREMENT
FILTERING EFFICIENCY	ASTM 5141	75% (MINIMUM)
GRAB TENSILE STRENGTH	ASTM D4632	100 LBS.
ELONGATION @ FAILURE	ASTM D4632	75%
MULLEN BURST STRENGTH	ASTM D3786	250 PSI
PUNCTURE STRENGTH	ASTM 4833	50 LBS.
APPARENT OPENING SIZE	ASTM D4751	NO LESS THAN 0.90 MM AND NO GREATER TAN 0.60 MM
FLOW RATE	ASTM D4491	0.2 GAL/FT²/MIN.
PERMATIVITY	ASTM D4491	0.05 SEC. -1 (MIN.)
ULTRAVIOLET RADIATION STABILITY %	ASTM D4355	70% AFTER 500 HOURS OF EXPOSURE (MIN.)

SUPPORTING POSTS:
POSTS SHALL BE AT LEAST 42" LONG MADE OF EITHER 1.5 INCH SQUARE HARDWOOD STAKES OR SHALL BE POSTS WITH PROJECTS FOR FASTENING THE GEOTEXTILE POSSESSING A MINIMUM STRENGTH OF 0.5 POUNDS PER LINEAR FOOT.

INSTALLATION:

TRENCH EXCAVATION:
EXCAVATE A TRENCH 6 INCHES DEEP AND 6 INCHES WIDE ON THE UPHILL SIDE OF THE FENCE LOCATION. FOR SLOPE AND SWALE INSTALLATIONS, EXTEND THE ENDS OF THE TRENCH UPHILL SO THAT THE BOTTOM END OF THE FENCE WILL BE HIGHER THAN THE TOP OF THE LOWEST PORTION OF THE FENCE.

SUPPORT POSTS:
INSTALL SUPPORT POSTS ON THE DOWNHILL SIDE OF THE TRENCH TO A MINIMUM DEPTH OF 12 INCHES TO ORIGINAL GROUND. SUPPORT POSTS SHALL BE SPACED NO GREATER THAN 10 FEET APART. SUPPORT POSTS SHOULD BE INSTALLED CLOSER THAN 10 FEET ON STEEP SLOPES OR WHEN CONCENTRATED FLOWS ARE ANTICIPATED.

GEOTEXTILE FILTER FABRIC:
STAPLE OR SECURE THE GEOTEXTILE TO THE SUPPORT POSTS PER MANUFACTURER'S INSTRUCTION SUCH THAT AT LEAST 6 INCHES OF GEOTEXTILE LIES WITHIN THE TRENCH. THE HEIGHT OF THE FENCE SHALL NOT EXCEED 30 INCHES.

BACKFILL & COMPACTION:
BACKFILL TRENCH WITH TAMPED SOIL OR AGGREGATE OVER THE GEOTEXTILE.

MAINTENANCE:

SILT FENCE SHOULD BE INSPECTED AT LEAST ONCE A WEEK AND WITHIN 24 HOURS OF THE END OF A STORM WITH A RAINFALL AMOUNT OF 0.5 INCHES OR GREATER. SEDIMENT DEPOSITS ARE TO BE REMOVED. FENCE SHOULD BE REPAIRED OR REPLACES WITHIN 24 HOURS OF OBSERVED FAILURE.

GEOTEXTILE SILT FENCE (GSF):

NOT TO SCALE

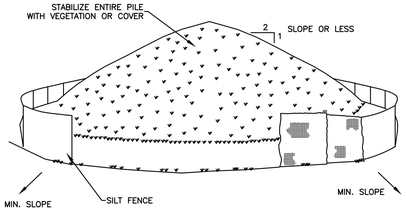

INSTALLATION NOTES:

1. AREA CHOSEN FOR STOCKPILING OPERATIONS SHALL BE DRY AND STABLE.
2. MAXIMUM SLOPE OF STOCKPILE SHALL BE 2 HORIZONTAL TO 1 VERTICAL.
3. UPON COMPLETION OF SOIL STOCKPILING, EACH PILE SHALL BE SURROUNDED WITH EITHER SILT FENCING OR STRAWBALES, THEN STABILIZED WITH VEGETATION OR COVERED.

SOIL STOCKPILING

NOT TO SCALE

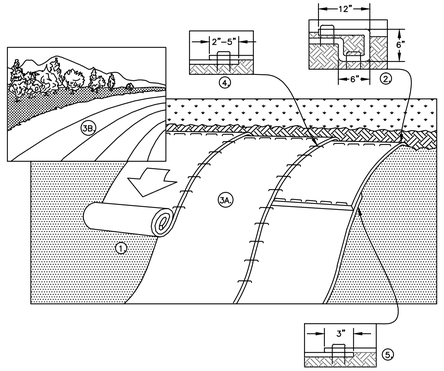

INSTALLATION PROCEDURE:

1. PREPARE SOIL BEFORE INSTALLING BLANKETS, INCLUDING ANY NECESSARY APPLICATION OF LIME, FERTILIZER, AND SEED.
2. BEGIN AT THE TOP OF THE SLOPE BY ANCHORING THE BLANKET IN A 6" (15cm) DEEP X 6" (15cm) WIDE TRENCH WITH APPROXIMATELY 12" (30cm) OF BLANKET EXTENDED BEYOND THE UP-SLOPE PORTION OF THE TRENCH. ANCHOR THE BLANKET WITH A ROW OF STAPLES/STAKES APPROXIMATELY 12" (30cm) APART IN THE BOTTOM OF THE TRENCH. BACKFILL AND COMPACT THE TRENCH AFTER STAPLING. APPLY SEED TO COMPACTED SOIL AND FOLD REMAINING 12" (30cm) PORTION OF BLANKET BACK OVER SEED AND COMPACTED SOIL. SECURE BLANKET OVER COMPACTED SOIL WITH A ROW OF STAPLES/STAKES SPACED APPROXIMATELY 12" (30cm) APART ACROSS THE WIDTH OF THE BLANKET.
3. ROLL THE BLANKETS (A.) DOWN OR (B.) HORIZONTALLY ACROSS THE SLOPE. BLANKETS WILL UNROLL WITH APPROPRIATE SIDE AGAINST THE SOIL SURFACE. ALL BLANKETS MUST BE SECURELY FASTENED TO SOIL SURFACE BY PLACING STAPLES/STAKES IN APPROPRIATE LOCATIONS AS SHOWN IN THE STAPLE PATTERN GUIDE. WHEN USING OPTIONAL DOT SYSTEM , STAPLES/STAKES SHOULD BE PLACED THROUGH EACH OF THE COLORED DOTS CORRESPONDING TO THE APPROPRIATE STAPLE PATTERN.
4. THE EDGES OF PARALLEL BLANKETS MUST BE STAPLED WITH APPROXIMATELY 2"-5" (5cm-12.5cm) OVERLAP DEPENDING ON BLANKET TYPE. TO ENSURE PROPER SEAM ALIGNMENT, PLACE THE EDGE OF THE OVERLAPPING BLANKET (BLANKET BEING INSTALLED ON TOP) EVEN WITH THE COLORED SEAM STITCH ON THE PREVIOUSLY INSTALLED BLANKET.
5. CONSECUTIVE BLANKETS SPLICED DOWN THE SLOPE MUST BE PLACED END OVER END (SHINGLE STYLE) WITH AN APPROXIMATE 3" (7.5cm) OVERLAP. STAPLE THROUGH OVERLAPPED AREA, APPROXIMATELY 12" (30cm) APART ACROSS ENTIRE BLANKET WIDTH.

EROSION CONTROL BLANKET NOTES:

1. EROSION CONTROL BLANKET TO BE INSTALLED ON ALL SLOPES 3 HORIZONTAL TO 1 VERTICAL OR STEEPER.
2. IN LOOSE SOIL CONDITIONS, THE USE OF STAPLE OR STAKE LENGTHS GREATER THAN 6" (15 CM) MAY BE NECESSARY TO PROPERLY SECURE THE BLANKETS

EROSION CONTROL BLANKET

NOT TO SCALE

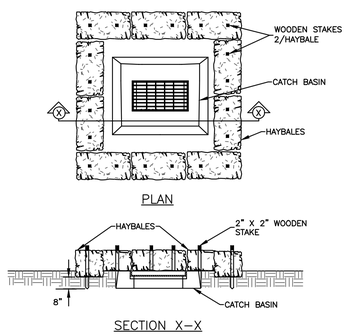

HAYBALES AT CATCH BASIN

NOT TO SCALE

GODFREY/HOFFMAN ASSOCIATES, LLC
PROFESSIONAL LAND SURVEYORS & CIVIL ENGINEERS
26 BROADWAY NORTH HAVEN, CT 06473
TEL: 203.239.4217 FAX: 203.234.2088 WWW.GODFREYHOFFMAN.COM

STATE OF CONNECTICUT LICENSED PROFESSIONAL ENGINEER No. 15987

IT IS A VIOLATION OF LAW FOR ANY PERSON, UNLESS THEY ARE ACTING UNDER THE DIRECTION OF A LICENSED PROFESSIONAL ENGINEER, TO ALTER IN ANY WAY AN ITEM BEARING THE LICENSED PROFESSIONAL ENGINEER'S SEAL. IT IS A VIOLATION OF LAW FOR ANY PERSON, UNLESS THEY ARE ACTING UNDER THE DIRECTION OF A LICENSED PROFESSIONAL ENGINEER, TO ALTER IN ANY WAY AN ITEM BEARING THE LICENSED PROFESSIONAL ENGINEER'S SEAL. IT IS A VIOLATION OF LAW FOR ANY PERSON, UNLESS THEY ARE ACTING UNDER THE DIRECTION OF A LICENSED PROFESSIONAL ENGINEER, TO ALTER IN ANY WAY AN ITEM BEARING THE LICENSED PROFESSIONAL ENGINEER'S SEAL.

ALL WORK, LABOR, AND MATERIALS TO BE IN STRICT ACCORDANCE WITH ALL APPLICABLE CODES AND LAW IN EFFECT AT THE TIME OF PERFORMANCE. ANY DEVIATION FROM THE PLAN OR ERROR OR OMISSION IN THE EVENT OF ERROR AND/OR OMISSIONS HEREIN, IN NO EVENT SHALL THE LIABILITY OF GODFREY/HOFFMAN ASSOCIATES, LLC, OR ANY OF ITS PROFESSIONAL EMPLOYEES BE GREATER THAN THE AMOUNT OF COMPENSATION RECEIVED BY GODFREY/HOFFMAN ASSOCIATES, LLC, FOR THE PROFESSIONAL SERVICES RENDERED IN CONNECTION WITH THE PREPARATION OF THE PLAN. THE INFORMATION CONTAINED HEREIN, IS THE PROPRIETARY AND CONFIDENTIAL PROPERTY OF GODFREY/HOFFMAN ASSOCIATES, LLC, AND SHALL BE RETURNED UPON WRITTEN REQUEST. THE REPRODUCTION OF THESE DOCUMENTS, WHICH ARE VALID ONLY WHEN BEARING THE LIVE SIGNATURE AND SEAL OF THE LICENSED PROFESSIONAL ENGINEER, IS PROHIBITED.
© COPYRIGHT 2015, ALL RIGHTS RESERVED

REVISION SCHEDULE

NO.	DATE	DESCRIPTION

PROJECT:

FACILITY EXPANSION PROJECT

115 JOHN STREET
WALLINGFORD, CONNECTICUT

PREPARED FOR:

WALLINGFORD ENERGY II, LLC

400 CHESTERFIELD CENTER, SUITE 110
ST. LOUIS, MO 63017

SOIL EROSION & SEDIMENTATION CONTROL DETAILS

DRAWN BY:	JT
CHECKED BY:	JR
SCALE:	1"=40'
PROJECT:	15-011
DATE:	6/2/2015

C-3.1

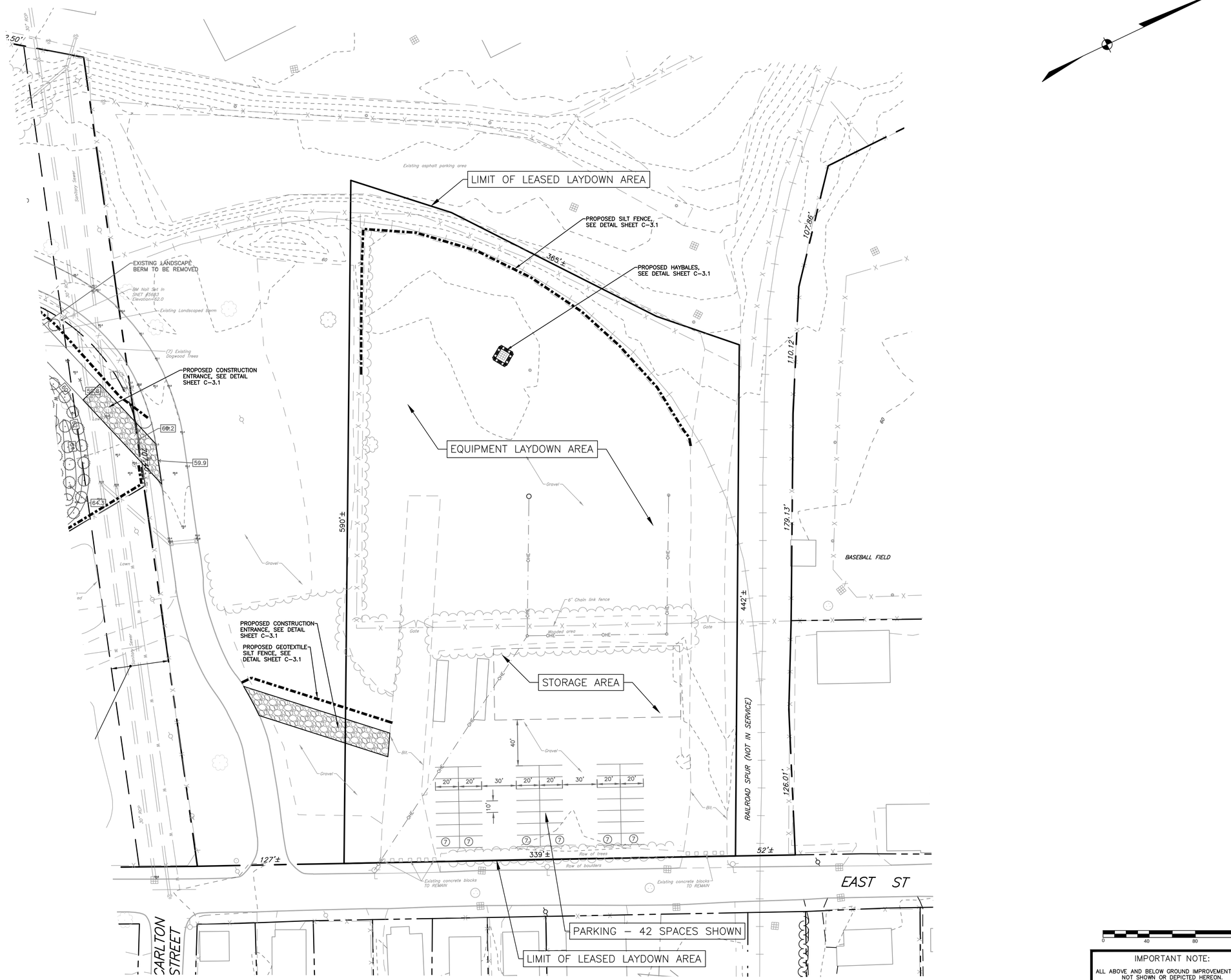

0 40 80 120

IMPORTANT NOTE:

ALL ABOVE AND BELOW GROUND IMPROVEMENTS ARE NOT SHOWN OR DEPICTED HEREON. ADDITIONAL UNDERGROUND UTILITIES MAY EXIST. PRIOR TO ANY EXCAVATION OR CONSTRUCTION, CONTACT: "CALL BEFORE YOU DIG" 1-800-922-4455

GODFREY HOFFMAN ASSOCIATES, LLC
PROFESSIONAL LAND SURVEYORS & CIVIL ENGINEERS
26 BROADWAY NORTH HAVEN, CT 06473
TEL: 203.239.4217 FAX: 203.234.2088 WWW.GODFREYHOFFMAN.COM

STATE OF CONNECTICUT
JAMES P. ROTONDO
No. 17057
PROFESSIONAL ENGINEER

NOT VALID WITHOUT LIVE SIGNATURE AND SEAL

ALL WORK, LABOR, AND MATERIALS TO BE IN STRICT ACCORDANCE WITH ALL APPLICABLE CODES AND LAWS WHICH SHALL SAVE PRECEDENCE OVER THESE DRAWINGS IN THE EVENT OF ERRORS AND/OR OMISSIONS HEREIN.

THE WORD "CERTIFY" OR "DECLARE" IS UNDERSTOOD TO BE AN EXPRESSION OF PROFESSIONAL OPINION BY THE LAND SURVEYOR AND/OR ENGINEER WHICH IS BASED ON THEIR BEST KNOWLEDGE, INFORMATION AND BELIEF AS SUCH IT CONSTITUTES NEITHER A GUARANTEE OR WARRANTY.

THE INFORMATION CONTAINED HEREIN IS THE PROPRIETARY AND CONFIDENTIAL PROPERTY OF GODFREY-HOFFMAN ASSOCIATES, LLC. REPRODUCTION OR DISCLOSURE, DESTRUCTION, OR DUPLICATION IN WHOLE OR IN PART REQUIRES THE WRITTEN PERMISSION OF GODFREY-HOFFMAN ASSOCIATES, LLC. THIS DOCUMENT AND COPIES THEREOF ARE VALID ONLY IF THEY BEAR THE LIVE SIGNATURE AND LIVE SEAL OF THE DESIGNATED LICENSED PROFESSIONAL.

© COPYRIGHT 2015, ALL RIGHTS RESERVED

REVISION SCHEDULE

NO.	DATE	DESCRIPTION

PROJECT: FACILITY EXPANSION PROJECT LEASED LAYDOWN AREA

115 JOHN STREET
WALLINGFORD, CONNECTICUT

PREPARED FOR:

WALLINGFORD ENERGY II, LLC

400 CHESTERFIELD CENTER, SUITE 110
ST. LOUIS, MO 63017

POTENTIAL LAYOUT LEASED LAYDOWN AREA

DRAWN BY:	MP
CHECKED BY:	JR
SCALE:	1"=40'
PROJECT:	15-011
DATE:	8/22/2016

C-4.0