4
PIPE-TYPE CABLE MAGNETIC FIELDS

4.1 Background

The primary objective of this report is to provide guidelines for the design of magnetic field management methods for underground transmission cables other than pipe-type cables. Pipe-type cables were excluded from the magnetic field management guide because they inherently have very low aboveground magnetic field values. However, there is very little published information that is available to quantify magnetic field values for pipe-type cable systems. This section of the report summarizes magnetic field measurement results for seven in-service pipe-type cables ranging from 69 kV to 345 kV. A typical pipe-type high-pressure fluid-filled (HPFF) cable is shown in Figure 4-1.

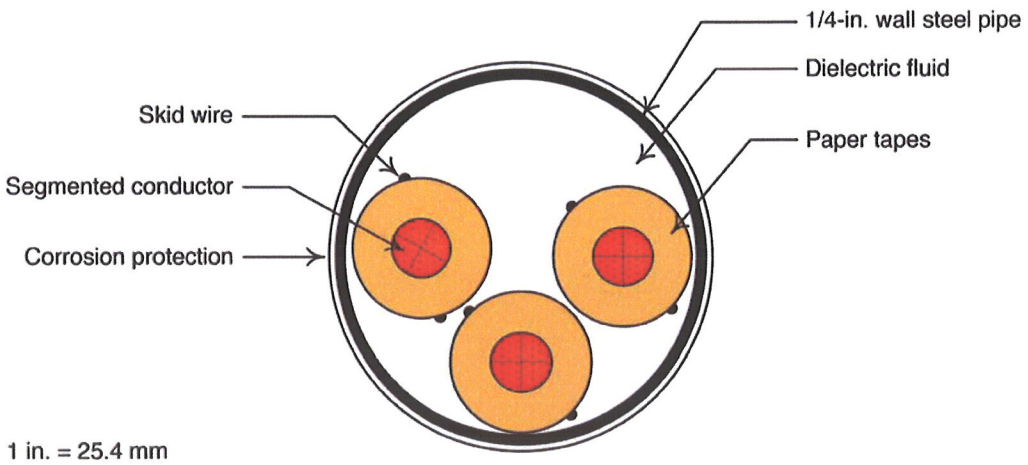

Figure 4-1
Typical HPFF underground transmission cables and steel pipe

4.2 Description of HPFF Cable Systems Selected for EMF Measurements

The magnetic field measurements were performed at four different electric utility companies located in the United States.

4.2.1 Utility 1: 69-kV and 345-kV HPFF Cable Systems

Magnetic field measurements were performed in the vicinity of a 69-kV and a 345-kV HPFF cable system at this utility. Both of these HPFF cable systems consisted of two cable circuits installed in a common trench (see Figures 4-2 and 4-3).

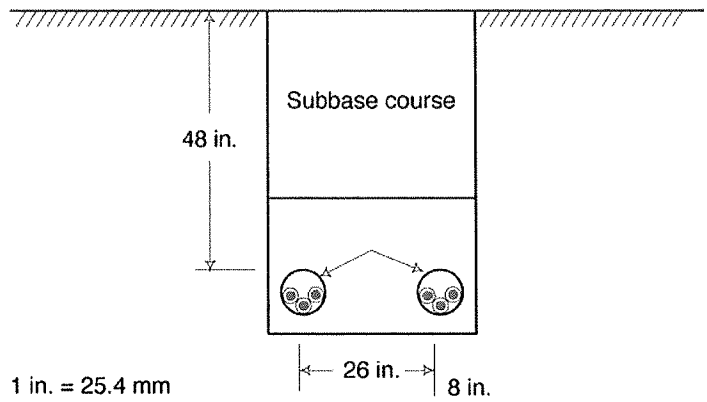

Figure 4-2
Cross section of 69-kV HPFF cable circuits in common trench at Utility 1

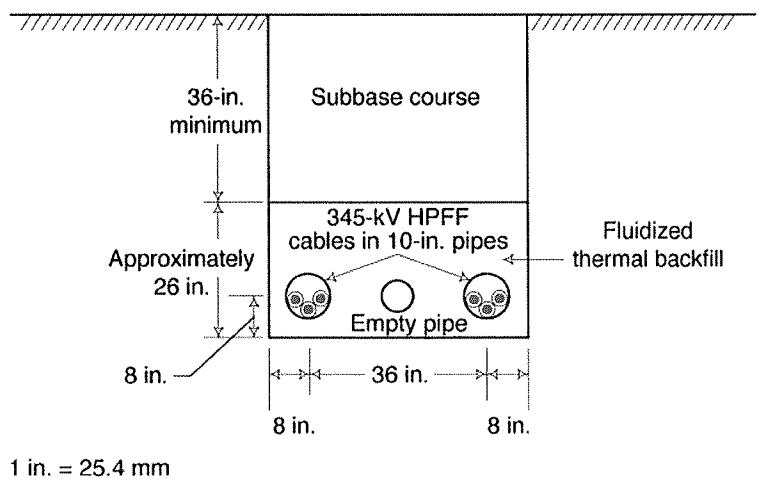

Figure 4-3
Cross section of 345-kV HPFF cable circuits in a common trench at Utility 1

The cables in the 69-kV underground transmission lines were installed in 8-in. (203-mm) pipes. Additional information about the 69-kV cables is contained in Table 4-1.

Table 4-1
Utility 1: 69-kV HPFF cable systems

Characteristic	Circuit 66201	Circuit 66202
Rated voltage	69 kV	69 kV
Conductor size	1500 kcmil (760 mm^2)	2500 kcmil (1267 mm^2)
Insulation thickness	270 mils (6.9 mm)	270 mils (6.9 mm)
Pipe size	8 in. (203 mm)	8 in. (203 mm)
Depth of cover	3–4 ft (0.91–1.22 m)	3–4 ft (0.91–1.22 m)
Years in operation	40 years	40 years
Circuit length	4.3 miles (6.9 km)	4.3 miles (6.9 km)
Pipe grounding	Resistor/rectifier	Resistor/rectifier
Cable phase current*	180 A	145 A

*At time of EMF measurements

Magnetic field values that were measured at lateral distances from the 69-kV cable trench are shown in Figure 4-4. Note that the magnetic field values are at ground level rather than the usual 1-m height above ground. This is because it was difficult to measure the magnetic field levels at 1 m above ground level due to relatively small values and interference from other magnetic fields in the vicinity of the measurement location.

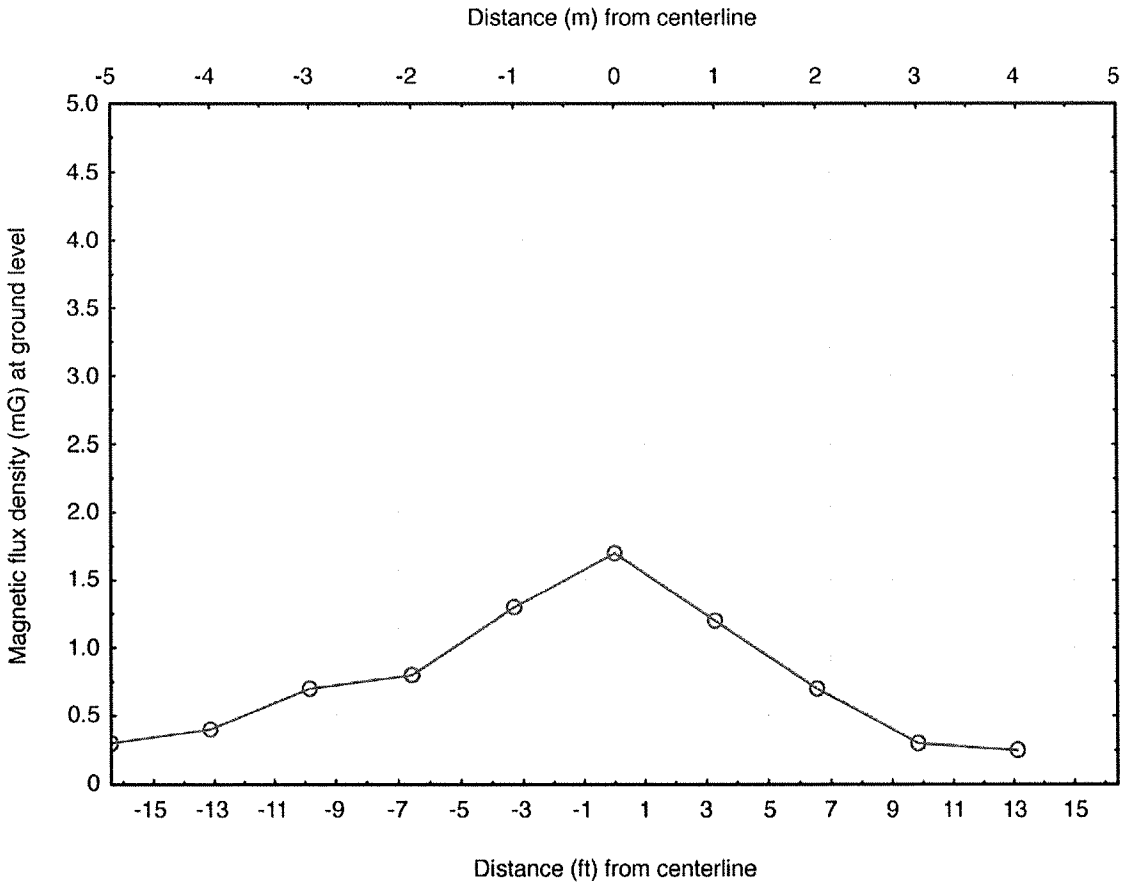

Figure 4-4
Utility 1: 69-kV HPFF cable circuits, ground-level magnetic field values

Characteristics of the 345-kV cable system at Utility 1 are shown in Table 4-2. Results of the magnetic field measurements for the 69-kV pipe-type cable system are shown in Figure 4-4. The measurements were performed in a substation at a location where the background magnetic field level was approximately 0.4 mG (0.04 μT) near ground level. Due to this interference, magnetic field measurements were limited to the center of the cable trench where the magnetic field was 0.7 mG (0.07 μT) at ground level.

Table 4-2
Utility 1: 345/138-kV HPFF cable systems

Characteristic	Circuit 304	Circuit Z67
Rated voltage	345 kV	345 kV
Operating voltage	345 kV	138 kV
Conductor size	2000 kcmil (1013 mm^2)	2000 kcmil (1013 mm^2)
Insulation thickness	920 mils (23.4 mm)	920 mils (23.4 mm)
Cable diameter	3.88 in. (98.6 mm)	3.88 in. (98.6 mm)
Pipe size	10 in. (254 mm)	10 in. (254 mm)
Depth of cover	8 ft (2.4 m)	8 ft (2.4 m)
Years in operation	10 years	10 years
Circuit length	11.2 miles (17.9 km)	6.4 miles (10.2 km)
Pipe grounding	Polarization cells/rectifier	Polarization cells/rectifier
Pipe current*	19 A	17.3 A
Cable phase current*	420 A	360 A

*At time of EMF measurements

4.2.2 Utility 2: 138-kV, 230-kV, and 345-kV HPFF Cable Systems

Magnetic field measurements were performed in the vicinity of 138-kV, 230-kV, and 345-kV HPFF cable systems at a second utility. Parameters for these three HPFF cable systems are summarized in Table 4-3. All of these HPFF cable systems consisted of a single pipe installed in a trench with depths of cover ranging from 3 ft (0.91 m) to 5 ft (1.52 m).

Table 4-3
Utility 2: 138-kV, 230-kV, and 345-kV HPFF cable system parameters

Characteristic	Circuit A-1353	Circuit B-3402	Circuit F-2258
Rated voltage	138 kV	345 kV	230 kV
Conductor size	2000 kcmil (1013 mm^2)	2000 kcmil (1013 mm^2)	2000 kcmil (1013 mm^2)
Insulation thickness	440 mils (11.2 mm)	920 mils (23.4 mm)	745 mils (18.9)
Cable diameter	2.655 in. (67.4 mm)	3.585 in. (91 mm)	3.265 in. (82.9 mm)
Pipe size	8 in. (203 mm)	10 in. (254 mm)	10 in. (254 mm)
Depth of cover	3 ft (0.91 m)	3.5 ft (1.07 m)	5 ft (1.52 m)
Years in operation	1.5 years	18 years	17 years
Circuit length	3 miles (4.8 km)	Not available	3 miles (4.8 km)
Pipe grounding	Resistor/rectifier	Resistor/rectifier	Polarization cell/rectifier
Pipe current*	18 A	29 A	9–29 A
Cable phase current*	728 A	400 A	904–954 A

* At time of EMF measurements

A plot of the magnetic field levels at ground level and 1 m above ground level for the 138-kV HPFF cable circuit is shown in Figure 4-5. Measurements were performed in an open field where the background magnetic field levels were close to zero. Results of magnetic field measurements for the 138-kV, 230-kV, and 345-kV cable systems are shown in Figures 4-5, 4-6, and 4-7, respectively.

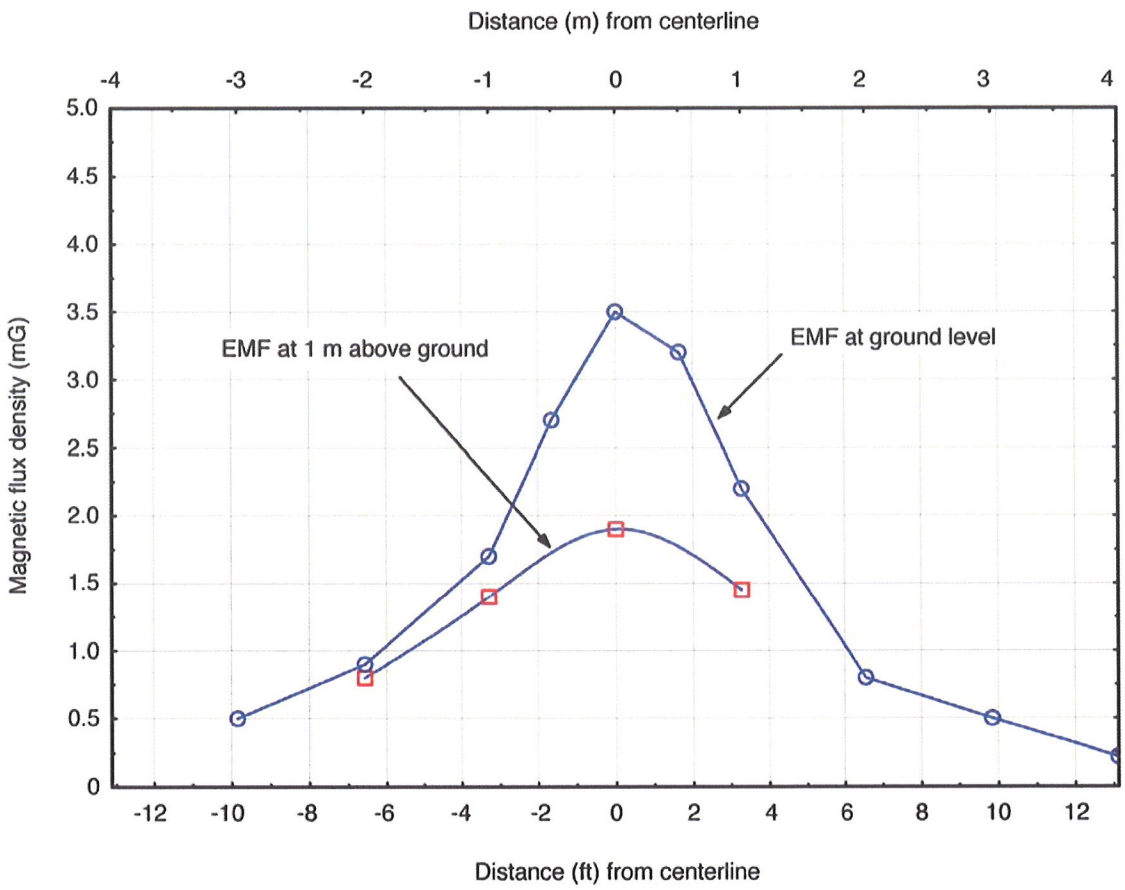

Figure 4-5
Utility 2: 138-kV HPFF cable circuits, magnetic field values (728 A)

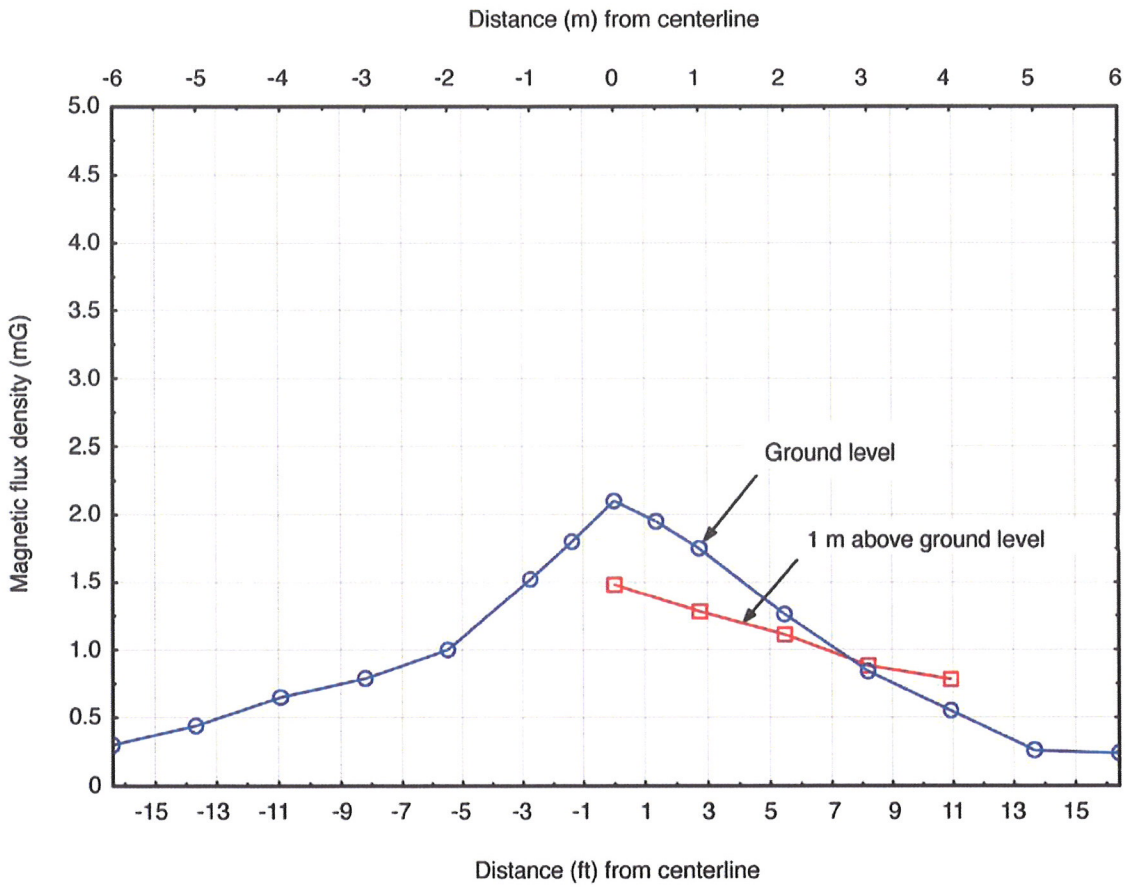

Figure 4-6
Utility 2: 230-kV HPFF cable circuits, magnetic field values at 1 m above ground (904–954 A)

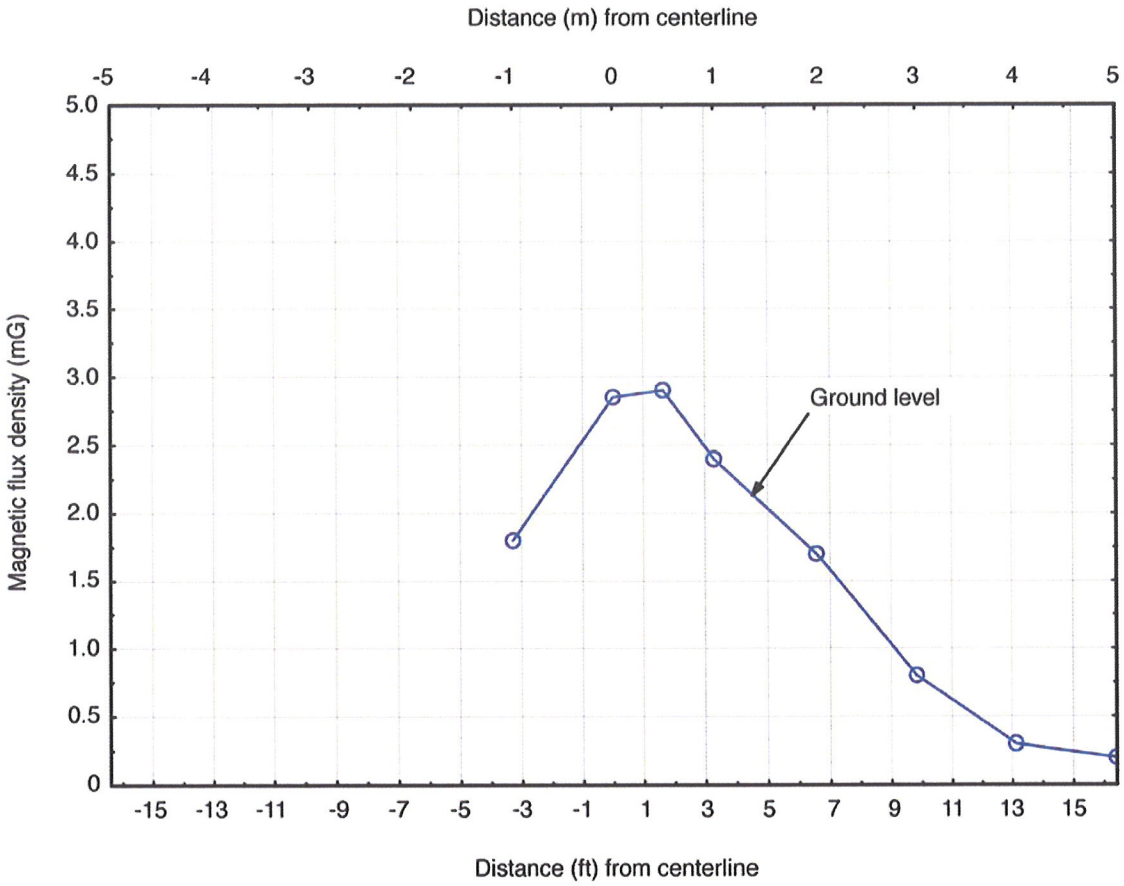

Figure 4-7
Utility 2: 345-kV HPFF cable circuits, ground-level magnetic field values

4.2.3 Utility 3: 138-kV HPFF Cable System

Magnetic field measurements at Utility 3 were performed in the vicinity of two 138-kV HPFF cable circuits in 8-in. (203-mm) pipes installed in a common trench, as shown in Figure 4-8. Table 4-4 contains the cable system parameters for the two 138-kV HPFF cable circuits. A plot of the magnetic field values at 1 m above ground is shown in Figure 4-9.

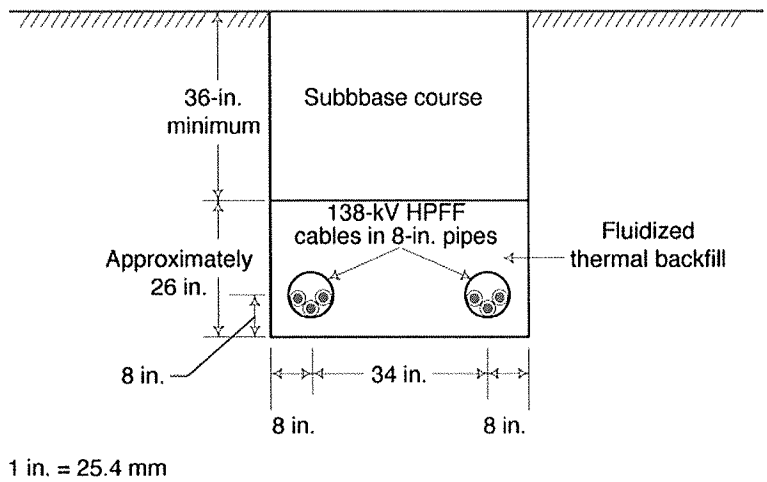

Figure 4-8
Utility 3: Cross section of 138-kV HPFF cable circuits in common trench

Table 4-4
Utility 3: 138-kV HPFF cable system

Characteristic	Circuit #1	Circuit #2
Rated voltage	138 kV	138 kV
Conductor size	3000 kcmil (1520 mm^2)	3000 kcmil (1520 mm^2)
Insulation thickness	440 mils (11.2 mm)	440 mils (11.2 mm)
Cable diameter	3.122 in. (79.3 mm)	3.122 in. (79.3 mm)
Pipe size	8 in. (203 mm)	8 in. (203 mm)
Depth of cover	4–5 ft (1.22–1.52 m)	4–5 ft (1.22–1.52 m)
Circuit length	Not available	Not available
Pipe grounding	Polarization cells/rectifier	Polarization cells/rectifier
Pipe current*	5.9 A	1–2 A
Cable phase current*	136 A	232 A

*At time of EMF measurements

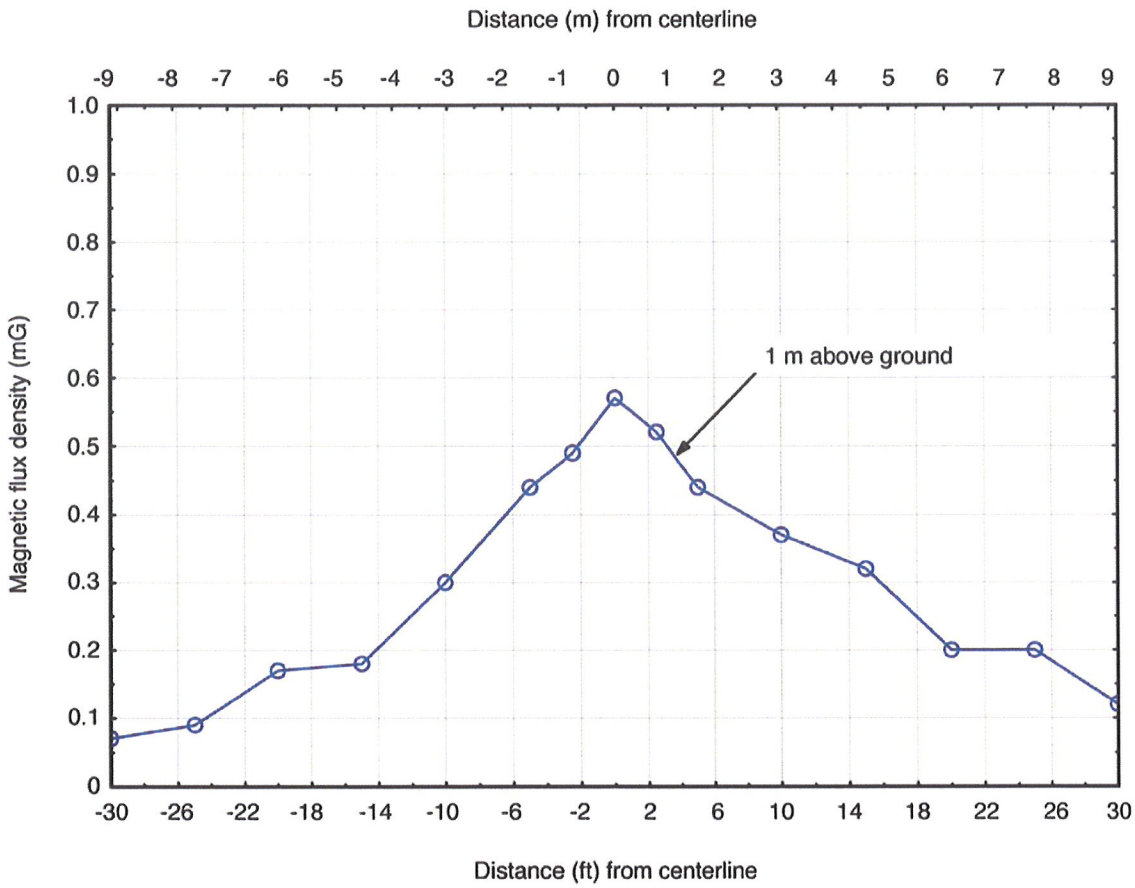

Figure 4-9
Utility 3: 138-kV HPFF cable circuits (see Figure 4-8) aboveground magnetic field values

4.2.4 Utility 4: 345-kV HPFF Cable System

Magnetic field measurements were performed in the vicinity of a 345-kV laminated paper polypropylene-insulated (LPP-insulated) HPFF underground transmission line that is installed in an 8-in. (203-mm) steel pipe. The cable pipe has a cover of 4 ft (1.22 m) at the location where the magnetic field measurements were performed. Table 4-5 shows the cable system parameters for this 345-kV HPFF cable circuit, and Figure 4-10 shows a typical trench cross section for this circuit at locations where the magnetic field measurements were performed.

Figure 4-11 is a plot of the ground-level magnetic field measurement results.

Table 4-5
Utility 4: 345-kV HPFF cable systems

Characteristic	Circuit 372
Rated voltage	345 kV
Operating voltage	345 kV
Conductor size	2250 kcmil (1140 mm^2)
LPP insulation thickness	600 mils (15.2 mm)
Pipe size	8 in. (203 mm)
Depth of cover	4 ft (1.22 m)
Years in operation	10 years
Circuit length	4.2 miles (6.7 km)
Pipe grounding	Polarization cells/rectifier
Pipe current*	17 A
Cable phase current*	350 A

*At time of EMF measurements

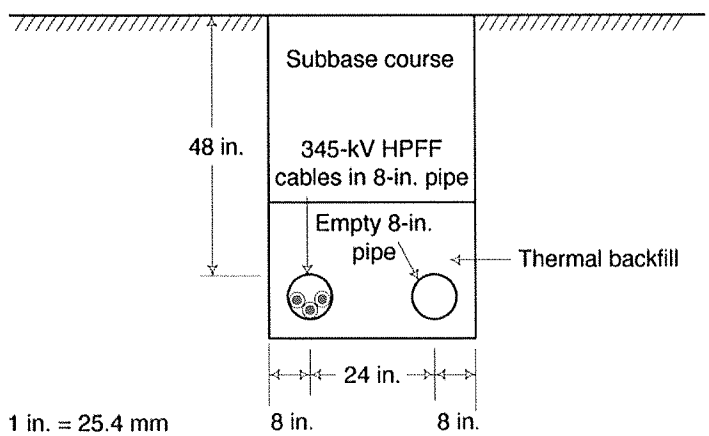

Figure 4-10
Cross section of 345-kV HPFF cable circuit at Utility 4

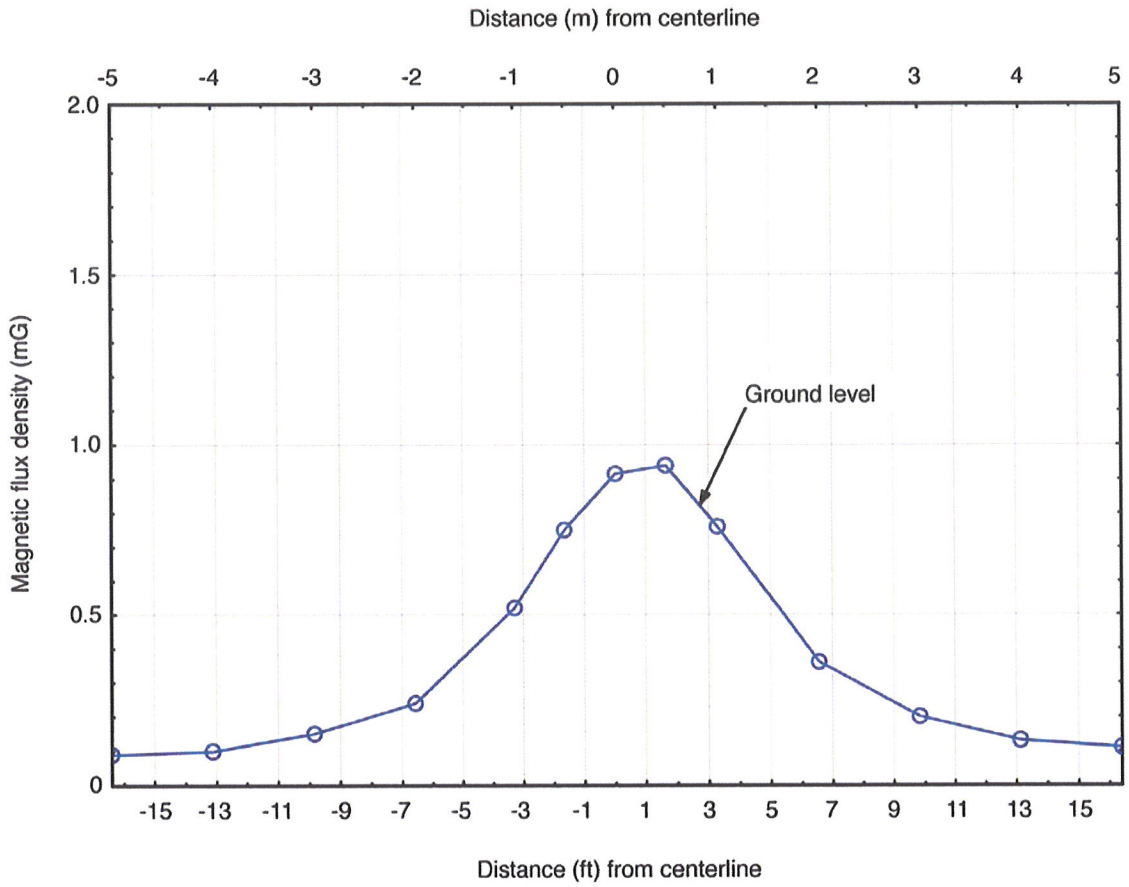

Figure 4-11
Utility 4: 345-kV HPFF cable circuit (see Figure 4-10), ground-level magnetic field values

4.3 Measurement Procedures

The following procedures were used to perform magnetic field measurements in the vicinity of the pipe-type cable transmission lines:

- Monitoring of the cable currents (MVA) was initiated at a remote location at the time of the magnetic field measurements. Continuous current readings were recorded by the utilities during the time of the measurements. The cable current values reported in the preceding tables were determined from the time-stamped load data provided by the utility.
- The approximate centerline of the underground transmission line was determined from utility as-built drawings. In most cases this was an approximate location of the cable pipe.
- An attempt was made to more accurately locate the centerline of the cable pipe or pipes based on the maximum ground level readings with a gauss meter.

- A general magnetic field survey was made on both sides of the cable circuit, where possible, (1) to determine whether the magnetic field was symmetric on both sides of the pipe and (2) to determine the ambient magnetic field level at 15 m to 20 m from the centerline of the pipe. This step was included to determine if other sources of magnetic fields might be present that would affect the magnetic field in the vicinity of the pipe-type cable system.
- Distances of 0.5 m, 1 m, 2 m, 3 m, 4 m, 5 m, 6 m, 7 m, 8 m, 9 m, 10 m, and 15 m, perpendicular to the route of the cable, were marked on the ground on both sides of the centerline if possible. In some cases, obstructions did not permit magnetic field measurements at all locations.
- Magnetic field measurements were made at each of these locations at ground level. Some measurements were also made at 1 m above ground level if the magnetic field at this height was significantly above the background magnetic field. At each location, the axis of the single-axis magnetic field probe was rotated to maximize the reading. The reported magnetic field levels are the rms values of the magnetic field ellipse (see Section 2.5.1.1).
- The alternating current (ac) flowing in the cable pipe-bonding leads was measured in most cases by moving to one or both of the substations at the ends of the cable circuit after the magnetic field measurements were completed. The pipe current measurements were made by placing a clamp-on ammeter around the pipe-bonding leads where they were connected to a polarization cell or a grounding resistor. These measurements of the pipe current gave an indication of the zero-sequence current and/or stray current that was flowing in the cable pipe.
- In the cases where the cable circuit was in a straight line, several spot-check measurements were made at distances for about 50 m along the cable route on both sides of the measurement locations. These measurements were made to determine if the magnetic field values varied significantly along the length of the cable.

All magnetic field (B) measurements were made using a calibrated Electric Field Measurements (EFM) model 116 single-axis magnetic field probe. The EFM model 116 magnetic field probe produces an output of 1 mV/mG or 10 mV/μT.

4.4 Measurement Results

Tables 4-6 and 4-7 summarize the magnetic field values measured at ground level and 1 m above ground level for the HPFF transmission cable systems described in the preceding sections. The values were measured directly above the cable trench centerline.

Table 4-6
Summary of maximum pipe-type cable ground-level magnetic field values

Circuit	Pipes in Trench	Burial Depth (ft [m])	Phase Current (A)	Maximum Magnetic Field (mG [μT])
Utility 1: 69 kV	2	3–4 ft (0.9–1.22 m)	145, 180	1.7 (0.17)
Utility 1: 138/345 kV	2	8 (2.44)	420, 360	0.7 (0.07)
Utility 2: 138 kV	1	3 (0.91)	730	3.5 (0.35)
Utility 2: 230 kV	1	5 (1.52)	900–950	2.2 (0.22)
Utility 2: 345 kV	1	3.5 (1.07)	400	2.9 (0.29)
Utility 4: 345 kV	1	4 (1.22)	350	0.9 (0.09)

Table 4-7
Summary of maximum pipe-type cable magnetic field values at 1 m above ground

Circuit	Pipes in Trench	Burial Depth (ft [m])	Phase Current (A)	Maximum Magnetic Field (mG [μT])
Utility 1: 138/345 kV	2	8 (2.440	420,360	0.6 (0.06)
Utility 2: 138 kV	1	3 (0.91)	730	1.9 (0.19)
Utility 2: 230 kV	1	5 (1.52)	900–950	1.5 (0.15)
Utility 2: 345 kV	1	3.5 (1.07)	400	2.0 (0.20)
Utility 3: 138 kV	2	4.5 (1.37)	136, 232	0.57 (0.057)

4.5 Summary

The ground-level and 1-m aboveground magnetic field values for the HPFF cable systems were equal to or less than 3.5 mG (0.36 μT) and 2.0 mG (0.36 μT), respectively, for all seven underground transmission lines. These HPFF cable systems covered system voltages from 69 kV through 345 kV. Some of the cable systems had two transmission lines in the same trench, and others had a single transmission line in a trench. Pipe currents (primarily zero-sequence current) for these seven cable systems ranged from 2 to 29 A.

Pipe-type underground transmission cable (that is, HPFF and high-pressure gas-filled [HPGF]) systems produce very low aboveground magnetic fields for three reasons. First, the 1/4-in. (6.3-mm) steel pipe effectively attenuates the magnetic field produced by positive- and negative-sequence balance currents flowing in the three cables. This effective shielding is a result of both induced eddy currents in the pipe and magnetic flux ducting (also known as shunting) due to the high magnetic permeability of the steel pipe. Magnetic field values are also low because the cables are in close proximity.

Second, zero-sequence currents flowing in pipe-type cables also produce very low aboveground magnetic field values. This is because most of the zero-sequence current flowing in high-voltage cables returns in the steel pipe rather than in remote earth, as illustrated in Figure 4-12. The polarization cells shown in Figure 4-12 have high impedance to dc and low impedance to ac.

Third, zero-sequence currents flowing in the high-voltage cables inside the steel pipe (connecting Substation A to Substation B in Figure 4-12) must return to the source (Substation A in this case) through remote earth (indicated by I_G) or through the magnetic steel pipe (I_P). If the zero-sequence current returns to the source through remote earth, the zero-sequence current flowing in the cables inside the pipe must magnetize the ferromagnetic steel pipe. This significantly increases the impedance of the current loop for the zero-sequence current, I_G, compared to return current in the pipe, I_P. Hence, the majority of the zero-sequence current returns in the inner wall of the steel pipe. Analytical calculations [9] using typical parameters for the steel pipe and earth impedance indicate that over 85% of zero-sequence current in a pipe-type cable system will return to the source through the steel pipe for 60-Hz power systems. This low zero-sequence impedance return path in the steel pipe results in low aboveground magnetic field values compared to transmission cables that are not installed in a common steel pipe.

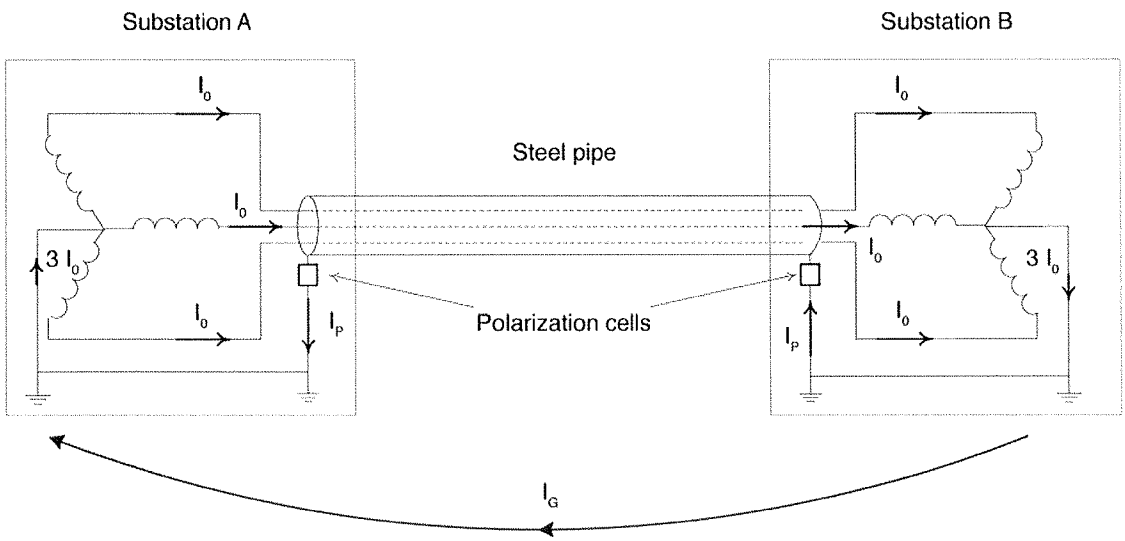

Figure 4-12
Zero-sequence current paths for a pipe-type transmission line