Robinson+Cole

KENNETH C. BALDWIN

280 Trumbull Street
Hartford, CT 06103-3597
Main (860) 275-8200
Fax (860) 275-8299
kbaldwin@rc.com
Direct (860) 275-8345

Also admitted in Massachusetts

October 27, 2015

Melanie A. Bachman
Acting Executive Director
Connecticut Siting Council
10 Franklin Square
New Britain, CT 06051

Re: **Notice of Exempt Modification – Facility Modification**
4 Volunteer Drive, Windsor Locks, Connecticut

Dear Ms. Bachman:

Cellco Partnership d/b/a Verizon Wireless ("Cellco") currently maintains twelve (12) wireless telecommunications antennas at the 150-foot level on the existing 195-foot tower at 4 Volunteer Drive in Windsor Locks, Connecticut (the "Property"). The tower and Property are owned by the Town of Windsor Locks. Cellco's shared use of this tower was approved in 2008. Cellco now intends to replace six (6) of its existing antennas with three (3) model SBNHH-1D65B, 1900 MHz antennas and three (3) model SBNHH-1D65B, 2100 MHz antennas, all at the same 150-foot level on the tower. Cellco also intends to replace three (3) remote radio heads ("RRHs") and install six (6) new RRHs and one (1) HYBRIFLEX™ fiber optic antenna cable. Included in Attachment 1 are specifications for Cellco's replacement antennas, RRHs and HYBRIFLEX™ cable.

Please accept this letter as notification pursuant to R.C.S.A. § 16-50j-73, for construction that constitutes an exempt modification pursuant to R.C.S.A. § 16-50j-72(b)(2). In accordance with R.C.S.A. § 16-50j-73, a copy of this letter is being sent to Steven N. Wawruck, Jr., First Selectman for the Town of Windsor Locks.

The planned modifications to the facility fall squarely within those activities explicitly provided for in R.C.S.A. § 16-50j-72(b)(2).

14218377-v1

Robinson+Cole

1. The proposed modifications will not result in an increase in the height of the existing tower. Cellco's replacement antennas and RRH's will be located at the 150-foot level on the 195-foot tower.

2. The proposed modifications will not involve any change to ground-mounted equipment and, therefore, will not require the extension of the site boundary.

3. The proposed modifications will not increase noise levels at the facility by six decibels or more, or to levels that exceed state and local criteria.

4. The operation of the replacement antennas will not increase radio frequency (RF) emissions at the facility to a level at or above the Federal Communications Commission (FCC) safety standard. A cumulative worst-case General Power Density table for Cellco's modified facility is included in Attachment 2.

5. The proposed modifications will not cause a change or alteration in the physical or environmental characteristics of the site.

6. The tower and its foundation can support Cellco's proposed modifications. (*See* Structural Analysis Report included in Attachment 3).

For the foregoing reasons, Cellco respectfully submits that the proposed modifications to the above-referenced telecommunications facility constitutes an exempt modification under R.C.S.A. § 16-50j-72(b)(2).

Sincerely,

Kenneth C. Baldwin

Enclosures
Copy to:
Steven N. Wawruck, Jr., Windsor Locks First Selectman
Tim Parks

ATTACHMENT 1

Product Specifications

COMMSCOPE®

POWERED BY ANDREW.

SBNHH-1D65B

Andrew® Tri-band Antenna, 698–896 and 2x 1695–2360 MHz, 65° horizontal beamwidth, internal RET. Both high bands share the same electrical tilt.

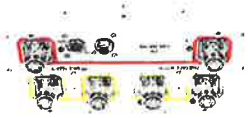

- Interleaved dipole technology providing for attractive, low wind load mechanical package

Electrical Specifications

Frequency Band, MHz	698–806	806–896	1695–1880	1850–1990	1920–2200	2300–2360
Gain, dBi	14.9	14.7	17.7	18.2	18.6	18.6
Beamwidth, Horizontal, degrees	68	66	69	66	63	58
Beamwidth, Vertical, degrees	12.1	10.7	5.6	5.2	5.0	4.5
Beam Tilt, degrees	0–14	0–14	0–7	0–7	0–7	0–7
USLS, dB	14	13	15	15	15	13
Front-to-Back Ratio at 180°, dB	27	29	28	28	28	27
CPR at Boresight, dB	20	23	20	20	17	21
CPR at Sector, dB	14	10	12	10	9	1
Isolation, dB	25	25	25	25	25	25
Isolation, Intersystem, dB	30	30	30	30	30	30
VSWR | Return Loss, dB	1.5 | 14.0	1.5 | 14.0	1.5 | 14.0	1.5 | 14.0	1.5 | 14.0	1.5 | 14.0
PIM, 3rd Order, 2 x 20 W, dBc	-153	-153	-153	-153	-153	-153
Input Power per Port, maximum, watts	350	350	350	350	350	300
Polarization	±45°	±45°	±45°	±45°	±45°	±45°
Impedance	50 ohm	50 ohm	50 ohm	50 ohm	50 ohm	50 ohm

Electrical Specifications, BASTA*

Frequency Band, MHz	698–806	806–896	1695–1880	1850–1990	1920–2200	2300–2360
Gain by all Beam Tilts, average, dBi	14.5	14.3	17.4	17.9	18.2	18.3
Gain by all Beam Tilts Tolerance, dB	±0.5	±0.8	±0.4	±0.3	±0.5	±0.3
Gain by Beam Tilt, average, dBi	0 ° | 14.6	0 ° | 14.5	0 ° | 17.4	0 ° | 17.8	0 ° | 18.1	0 ° | 18.2
	7 ° | 14.6	7 ° | 14.4	3 ° | 17.5	3 ° | 17.9	3 ° | 18.3	3 ° | 18.4
	14 ° | 14.2	14 ° | 13.6	7 ° | 17.4	7 ° | 17.9	7 ° | 18.2	7 ° | 18.4
Beamwidth, Horizontal Tolerance, degrees	±2.2	±3.4	±2	±4.6	±5.7	±4.3
Beamwidth, Vertical Tolerance, degrees	±0.8	±1	±0.3	±0.2	±0.3	±0.2
USLS, dB	16	14	16	16	16	15
Front-to-Back Total Power at 180° ± 30°, dB	25	26	27	26	26	26
CPR at Boresight, dB	22	23	21	20	20	22
CPR at Sector, dB	13	11	16	12	11	4

* CommScope® supports NGMN recommendations on Base Station Antenna Standards (BASTA). To learn more about the benefits of BASTA, download the whitepaper Time to Raise the Bar on BSAs.

General Specifications

Antenna Brand	Andrew®
Antenna Type	DualPol® multiband with internal RET
Band	Multiband
Brand	DualPol® | Teletilt®
Operating Frequency Band	1695 – 2360 MHz | 698 – 896 MHz
Performance Note	Outdoor usage

©2015 CommScope, Inc. All rights reserved. All trademarks identified by ® or ™ are registered trademarks, respectively, of CommScope.
All specifications are subject to change without notice. See www.commscope.com for the most current information. Revised: July 23, 2015

Product Specifications

COMMSCOPE®

POWERED BY ANDREW.

SBNHH-1D65B

Mechanical Specifications

Color	Light gray
Lightning Protection	dc Ground
Radiator Material	Aluminum | Low loss circuit board
Radome Material	Fiberglass, UV resistant
Reflector Material	Aluminum
RF Connector Interface	7-16 DIN Female
RF Connector Location	Bottom
RF Connector Quantity, total	6
Wind Loading, maximum	617.7 N @ 150 km/h 138.9 lbf @ 150 km/h
Wind Speed, maximum	241.4 km/h | 150.0 mph

Dimensions

Depth	181.0 mm | 7.1 in
Length	1851.0 mm | 72.9 in
Width	301.0 mm | 11.9 in
Net Weight	18.4 kg | 40.6 lb

Remote Electrical Tilt (RET) Information

Input Voltage	10–30 Vdc
Power Consumption, idle state, maximum	2.0 W
Power Consumption, normal conditions, maximum	13.0 W
Protocol	3GPP/AISG 2.0 (Multi-RET)
RET Interface	8-pin DIN Female | 8-pin DIN Male
RET Interface, quantity	1 female | 1 male
RET System	Teletilt®

Packed Dimensions

Depth	299.0 mm | 11.8 in
Length	1970.0 mm | 77.6 in
Width	409.0 mm | 16.1 in
Shipping Weight	31.0 kg | 68.3 lb

Regulatory Compliance/Certifications

Agency	Classification
RoHS 2011/65/EU	Compliant by Exemption
China RoHS SJ/T 11364-2006	Above Maximum Concentration Value (MCV)
ISO 9001:2008	Designed, manufactured and/or distributed under this quality management system

Included Products

©2015 CommScope, Inc. All rights reserved. All trademarks identified by ® or ™ are registered trademarks, respectively, of CommScope.
All specifications are subject to change without notice. See www.commscope.com for the most current information. Revised: July 23, 2015

BSAMNT-1 — Wide Profile Antenna Downtilt Mounting Kit for 2.4 - 4.5 in (60 - 115 mm) OD round members. Kit contains one scissor top bracket set and one bottom bracket set.

* Footnotes

Performance Note	Severe environmental conditions may degrade optimum performance

©2015 CommScope, Inc. All rights reserved. All trademarks identified by ® or ™ are registered trademarks, respectively, of CommScope.
All specifications are subject to change without notice. See www.commscope.com for the most current information. Revised: July 23, 2015

ALCATEL-LUCENT B13 RRH4X30-4R

Alcatel-Lucent B13 Remote Radio Head 4x30-4R is the newest addition of Remote Radio Head to the extended product line of Alcatel-Lucent's distributed Base Station solutions, aimed at facilitating smooth RF site acquisition and related civil engineering.

Supporting 2Tx/4Tx MIMO and 4-way Rx diversity, Alcatel-Lucent B13 RRH4x30-4R allows operators to have a compact radio solution to deploy LTE in the 700U band (700 MHz, 3GPP band 13), providing them with the means to achieve high capacity, high quality and high coverage with minimum site requirements.

The Alcatel-Lucent B13 RRH4x30-4R product has four transmit RF paths, offering the possibility to **select, via software only, 2Tx or 4Tx MIMO configurations** with either 2x60 W or 4x30 W RF output power. It supports also 4-way Rx diversity and up to 10MHz instantaneous bandwidth.

The Alcatel-Lucent B13 RRH4x30-4R is a near zero-footprint solution and operates noise free, simplifying negotiations with site property owners and minimizing environmental impacts.

Its compactness and slim design makes the Alcatel-Lucent B13 RRH4x30-4R easy to install close to the antenna: operators can therefore locate this Remote Radio Head where RF design conditions are deemed ideal, minimizing trade-offs between available sites and RF optimum sites, together with reducing the RF feeder needs and installation costs.

FEATURES

- Supporting LTE in 700 MHz band (700U, 3GPP band 13)
- LTE 2Tx or 4Tx MIMO (SW switchable)
- Output power: Up to 2x60W or 4x30W
- 10MHz LTE carrier with 4Rx Diversity
- Convection-cooled (fan-less)
- Supports AISG 2.0 ALD devices (RET, TMA) through RS485 or RF ports

BENEFITS

- Compact to reduce additional footprint when adding LTE in 700U band
- MIMO scheme operation selection (2Tx or 4Tx) by software only
- Improves downlink spectral efficiency through MIMO4
- Increases LTE coverage thanks to 4Rx diversity capability and best in class Rx sensitivity
- Flexible mounting options: Pole or Wall

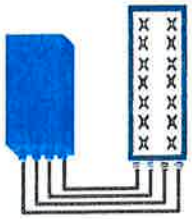

4x30W with 4T4R
or
2x60W with 2T4R

Can be switched between modes via SW w/o site visit

Features & performance	
Number of TX/RX paths	4 duplexed (either 4T4R or 2T4R by SW)
Frequency band	U700 (C) (3GPP bands 13): DL: 746 - 756 MHz / UL: 777 - 787 MHz
Instantaneous bandwidth - #carriers	10MHz – 1 LTE carrier (in 10MHz occupied bandwidth)
LTE carrier bandwidth	10 MHz
RF output power	2x60W or 4x30W (by SW)
Noise figure – RX Diversity scheme	2 dB typ. (<2.5 dB max) – 2 or 4 way Rx diversity
Sizes (HxWxD) in mm (in.) Volume in L Weight in kg (lb) (w/o mounting HW)	550 x 305 x 230 (21.6" x 12.0" x 9") (with solar shield) 38 (with solar shield) 26 (57.2) (with solar shield)
DC voltage range DC power consumption	-40.5 to -57V at full performance, -38 to -57V with relaxation on power consumption 550W typical @100% RF load (in 2Tx or 4TX mode)
Environmental conditions Wind load (@150km/h or 93mph)	-40°C (-40°F) /+55°C (+131°F) IP65 Frontal:<200N / Lateral :<150N
Antenna ports	4 ports 7/16 DIN female (50 ohms) VSWR < 1.5
CPRI ports	2 CPRI ports (HW ready for Rate7, 9.8 Gbps) SFP single mode dual fiber
AISG interfaces	1 AISG2.0 output (RS485) Integrated Smart Bias Tees (x2)
Misc. Interfaces	4 external alarms (1 connector) – 4 RF Tx & 4 RF Rx monitor ports - 1 DC connector (2 pins)
Installation conditions	Pole and wall mounting
Regulatory compliance	3GPP 36.141 / 3GPP 36.113 / GR-1089-CORE / GR-3108-CORE / UL 60950-1 / FCC Part 27

www.alcatel-lucent.com Alcatel, Lucent, Alcatel-Lucent and the Alcatel-Lucent logo are trademarks of Alcatel-Lucent. All other trademarks are the property of their respective owners. The information presented is subject to change without notice. Alcatel-Lucent assumes no responsibility for inaccuracies contained herein.
Copyright © 2014 Alcatel-Lucent. All Rights Reserved

PCS RF MODULES

RRH1900 2X60 - HW CHARACTERISTICS

LA6.0.1/13.3

	RRH2x60
RF Output Power	2x60W
Instantaneous Bandwidth	20MHz
Transmitter	2 TX
Receiver 1900 HW version 1900A HW version	2 Branch RX – LA6.0.1 4 Branch RX – LR13.3
Features	AISG 2.0 for RET/TMA
	Internal Smart Bias-T
Power	-48VDC
CPRI Ports	2 CPRI Rate 3 Ports
External Alarms	4 External User Alarms
Monitor Ports	TX
Environmental	GR487 Compliance
RF Connectors	7/16 DIN (top mounted)

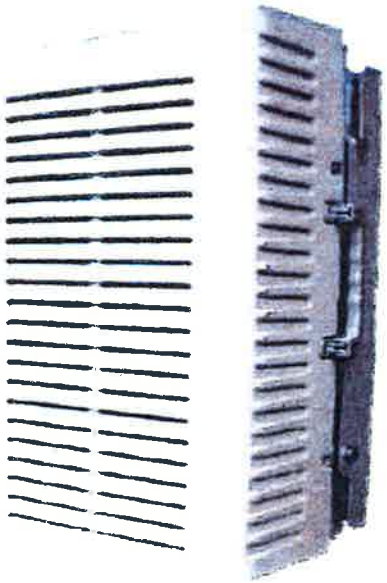

** Not a Verizon Wireless deployed product

COPYRIGHT © 2014 ALCATEL-LUCENT. ALL RIGHTS RESERVED.
ALCATEL-LUCENT – CONFIDENTIAL – SOLELY FOR AUTHORIZED PERSONS HAVING A NEED TO KNOW – PROPRIETARY – USE PURSUANT TO COMPANY INSTRUCTION

Alcatel·Lucent

NEW PCS RF MODULES FOR VZW

RRH2X60 - HW CHARACTERISTICS

LR14.3

	RRH2x60
RF Output Power	2x60W (4x30W HW Ready)
Instantaneous Bandwidth	60MHz
Target Reliability (Annual Return Rate)	<2%
Receiver	4 Branch Rx
Features	AISG 2.0 for RET/TMA
Power	-48VDC
	Internal Smart Bias-T
CPRI Ports	2 CPRI Rate 5 Ports
External Alarms	4 External User Alarms
Monitor Ports	TX, RX
Environmental	GR487 Compliance
RF Connectors	7/16 DIN (downward facing)
Dimensions	22"(h) x 12"(w)x 9.4" (d)**
Weight	55lb**

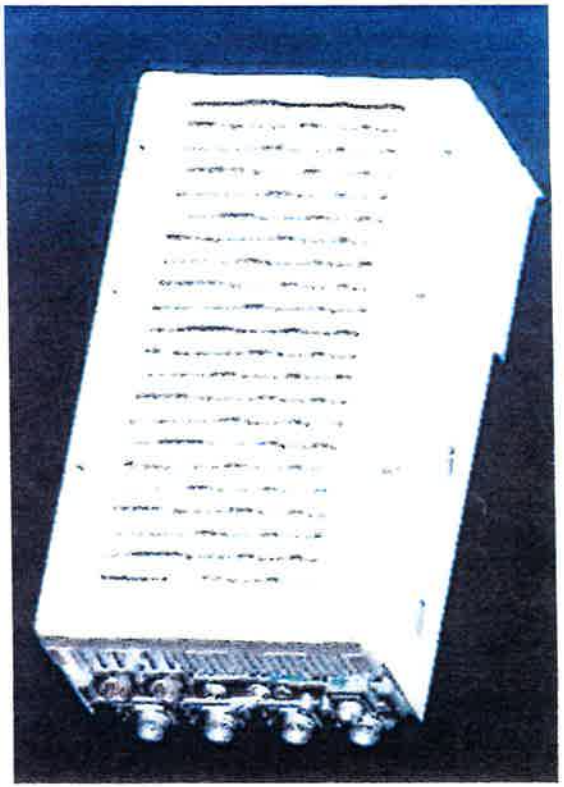

**- Includes solar shield but not mounting brackets (8 lbs.)

Alcatel·Lucent

COPYRIGHT © 2014 ALCATEL-LUCENT. ALL RIGHTS RESERVED.
ALCATEL-LUCENT – CONFIDENTIAL -- SOLELY FOR AUTHORIZED PERSONS HAVING A NEED TO KNOW -- PROPRIETARY – USE PURSUANT TO COMPANY INSTRUCTION

B66A RRH 4X45 - PHYSICAL CHARACTERISTICS- TARGET 15.1

B4 RRH4x45-4R (AWS-Extension Band)	
Frequency Band	LR15.1 – B4 / LR16.1 B66 (AWS 1 and 3 only)
RF Output Power	2x90W/4x45W (SW configurable)
Operational range	2110-2180 MHz, DL/ 1710-1780 MHz UL
Instantaneous Bandwidth	70MHz
Configuration (HW readiness)	LTE: 2T2R, 2T4R, 4T4R
Carrier Bandwidths	5, 10, 15 and 20 MHz
Interfaces	2x CPRI Rate 7 Ports Antenna Connectors 4.3-10
AISG Support	AISG 2.0 for RET Internal Smart Bias T
Monitor Ports	NA (Spec An to replace ports)
Environmental	GR487 Compliance / GR3178 Compliance (with exceptions)
Mounting options	Pole/Wall
Connectors location	All bottom
External Alarms	4
Annual Return Rate (Target)	<2%
Operating Temperature	-40 C to +55 C (without solar load)

- Commercial Product Will include B66 support of AWS 1 and 3.
- Lower AWS 3 UL Not in 3GPP Band 66 Definition

Physical Dimensions – Not to Exceed		
	W/O Solar Shield	With Solar Shield
Dimensions HxWxD	H = 26in (H=660mm) W = 11.4in (W=290mm) D = 5.9in (D=150mm)	H = 26.6in (H=675mm) W = 12in (W=304mm) D = 6.8n (D=173mm)
Volume	29l	35.5l
Weight		64lbs / 29kg

COPYRIGHT © 2014 ALCATEL-LUCENT. ALL RIGHTS RESERVED.
ALCATEL-LUCENT – CONFIDENTIAL – SOLELY FOR AUTHORIZED PERSONS HAVING A NEED TO KNOW – PROPRIETARY – USE PURSUANT TO COMPANY INSTRUCTION

Product Data Sheet HB158-1-08U8-S8J18

HYBRIFLEX™ RRH Hybrid Feeder Cabling Solution, 1-5/8", Single-Mode Fiber

Product Description

RFS' HYBRIFLEX Remote Radio Head (RRH) hybrid feeder cabling solution combines optical fiber and DC power for RRHs in a single lightweight aluminum corrugated cable, making it the world's most innovative solution for RRH deployments.

It was developed to reduce installation complexity and costs at Cellular sites. HYBRIFLEX allows mobile operators deploying an RRH architecture to standardize the RRH installation process and eliminate the need for and cost of cable grounding. HYBRIFLEX combines optical fiber (multi-mode or single-mode) and power in a single corrugated cable. It eliminates the need for junction boxes and can connect multiple RRHs with a single feeder. Standard RFS CELLFLEX® accessories can be used with HYBRIFLEX cable. Both pre-connectorized and on-site options are available.

Figure 1: HYBRIFLEX Series

Features/Benefits

- Aluminum corrugated armor with outstanding bending characteristics – minimizes installation time and enables mechanical protection and shielding
- Same accessories as 1 5/8" coaxial cable
- Outer conductor grounding – Eliminates typical grounding requirements and saves on installation costs
- Lightweight solution and compact design – Decreases tower loading
- Robust cabling – Eliminates need for expensive cable trays and ducts
- Installation of tight bundled fiber optic cable pairs directly to the RRH – Reduces CAPEX and wind load by eliminating need for interconnection
- Optical fiber and power cables housed in single corrugated cable – Saves CAPEX by standardizing RRH cable installation and reducing installation requirements
- Outdoor polyethylene jacket – Ensures long-lasting cable protection

Technical Specifications

Outer Conductor Armor	Corrugated Aluminum	[mm (in)]	46.5 (1.83)
Jacket	Polyethylene, PE	[mm (in)]	50.3 (1.98)
UV-Protection	Individual and External Jacket		Yes
Weight, Approximate		[kg/m (lb/ft)]	1.9 (1.30)
Minimum Bending Radius, Single Bending		[mm (in)]	200 (8)
Minimum Bending Radius, Repeated Bending		[mm (in)]	500 (20)
Recommended/Maximum Clamp Spacing		[m (ft)]	1.0 / 1.2 (3.25 / 4.0)
DC-Resistance Outer Conductor Armor		[Ω/km (Ω/1000ft)]	068 (0.205)
DC-Resistance Power Cable, 8.4mm² (8AWG)		[Ω/km (Ω/1000ft)]	2.1 (0.307)
Version			Single-mode OM3
Quantity, Fiber Count			16 (8 pairs)
Core/Clad		[µm]	50/125
Primary Coating (Acrylate)		[µm]	245
Buffer Diameter, Nominal		[µm]	900
Secondary Protection, Jacket, Nominal		[mm (in)]	2.0 (0.08)
Minimum Bending Radius		[mm (in)]	104 (4.1)
Insertion Loss @ wavelength 850nm		dB/km	3.0
Insertion Loss @ wavelength 1310nm		dB/km	1.0
Standards (Meets or exceeds)			UL94-V0, UL1666 RoHS Compliant
Size (Power)		[mm (AWG)]	8.4 (8)
Quantity, Wire Count (Power)			16 (8 pairs)
Size (Alarm)		[mm (AWG)]	0.8 (18)
Quantity, Wire Count (Alarm)			4 (2 pairs)
Type			UV protected
Strands			19
Primary Jacket Diameter, Nominal		[mm (in)]	6.8 (0.27)
Standards (Meets or exceeds)			NFPA 130, ICEA S-95-658 UL Type XHHW-2, UL 44 UL-LS Limited Smoke, UL VW-1 IEEE-383 (1974), IEEE1202/FT4 RoHS Compliant
Installation Temperature		[°C (°F)]	-40 to +65 (-40 to149)
Operation Temperature		[°C (°F)]	-40 to +65 (-40 to149)

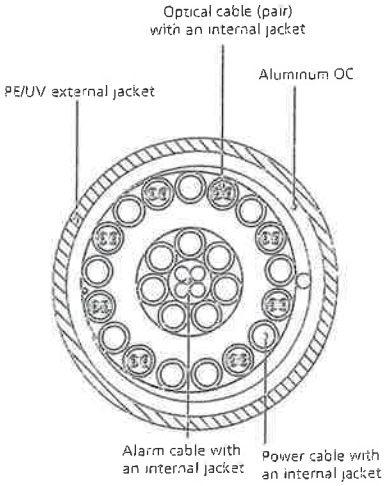

Figure 2: Construction Detail

* This data is provisional and subject to change

All information contained in the present datasheet is subject to confirmation at time of ordering.

ATTACHMENT 2

	General	Power	Density					
Site Name: Windsor Locks NE								
Tower Height: 195'								
CARRIER	**# OF CHAN.**	**WATTS ERP**	**HEIGHT**	**CALC. POWER DENS**	**FREQ.**	**MAX. PERMISS. EXP.**	**FRACTION MPE**	**Total**
*AT&T UMTS	2	565	170	0.0151	880	0.5867	0.26%	
*AT&T UMTS	2	1077	170	0.0288	1900	1.0000	0.29%	
*AT&T GSM	1	283	170	0.0038	880	0.5867	0.06%	
*AT&T LTE	1	1375	170	0.0184	734	0.4893	0.38%	
*T-Mobile 1900/2100 MHz	6	629	146	0.0692	1900/2100	1.0000	0.69%	
*T-Mobile 700MHz	1	396	146	0.0073	700	0.4667	0.16%	
*Clearwire antennas	2	153	109	0.0104	2496	1.0000	0.10%	
*Clearwire microwave dishes	1	211	109	0.0072	11 GHz	1.0000	0.07%	
*Clearwire microwave dishes	1	211	109	0.0072	11 GHz	1.0000	0.07%	
*Clearwire microwave dishes	1	211	109	0.0072	11 GHz	1.0000	0.07%	
*Sprint CDMA/LTE	3	693	115	0.0629	1900	1.0000	0.63%	
*Sprint CDMA/LTE	1	390	115	0.0118	850	0.5667	0.21%	
*Sprint CDMA/LTE	2	693	115	0.0420	2500	1.0000	0.42%	
*Windsor Fire Dept			180	0.0033	170.15	0.2000	0.17%	
*Windsor Fire Dept			180	0.0044	155.61	0.2000	0.22%	
*Windsor Fire Dept			180	0.0044	155.085	0.2000	0.22%	
*Windsor Fire Dept			180	0.0011	153.935	0.2000	0.06%	
*Windsor Fire Dept			180	0.0027	154.115	0.2000	0.13%	
*Windsor Fire Dept			180	0.0027	155.205	0.2000	0.13%	
*Windsor Fire Dept			180	0.0012	33.94	0.2000	0.06%	
*Windsor Fire Dept			180	0.0089	154.265	0.2000	0.44%	
Verizon	**11**	**408**	**150**	**0.0717**	**1970**	**1.0000**	**7.17%**	
Verizon	**9**	**386**	**150**	**0.0555**	**869**	**0.5793**	**9.58%**	
Verizon	**1**	**3500**	**150**	**0.0559**	**2145**	**1.0000**	**5.59%**	
Verizon	**1**	**2100**	**150**	**0.0336**	**746**	**0.4973**	**6.75%**	
								33.9%
* Source: Siting Council								

ATTACHMENT 3

CENTEK engineering

Centered on Solutions℠

Structural Analysis Report

195' Existing Valmont Lattice Tower

Proposed Verizon Wireless
Antenna Upgrade

Verizon Site Ref: Windsor Locks NE

4 Volunteer Drive
Windsor Locks, CT

Centek Project No. 15001.074

~~Date: August 7, 2015~~
Rev 1: September 1, 2015

STATE OF CONNECTICUT
TIMOTHY J. LYNN
No. 29336
LICENSED
PROFESSIONAL ENGINEER

Prepared for:

Verizon Wireless
99 East River Road, 9th Floor
East Hartford, CT 06108

63-2 North Branford Road, Branford, CT 06405 203.488.0580 Fax 203.488.8587 www.CentekEng.com

Table of Contents

SECTION 1 - REPORT

- INTRODUCTION
- ANTENNA AND APPURTENANCE SUMMARY
- PRIMARY ASSUMPTIONS USED IN THE ANALYSIS
- ANALYSIS
- TOWER LOADING
- TOWER CAPACITY
- FOUNDATION AND ANCHORS
- CONCLUSION AND RECOMMENDATIONS

SECTION 2 – CONDITIONS & SOFTWARE

- STANDARD ENGINEERING CONDITIONS
- GENERAL DESCRIPTION OF STRUCTURAL ANALYSIS PROGRAM

SECTION 3 – CALCULATIONS

- tnxTower INPUT/OUTPUT SUMMARY
- tnxTower FEED LINE PLAN
- tnxTower FEED LINE DISTRIBUTION
- tnxTower DETAILED OUTPUT
- FOUNDATION ANALYSIS

SECTION 4 – REFERENCE MATERIALS

- VERIZON RF DATA SHEET
- ANTENNA CUT SHEETS
- TOWER INVENTORY DATED 2/5/2015

Introduction

The purpose of this report is to summarize the results of the non-linear, P-Δ structural analysis of the antenna upgrade proposed by Verizon Wireless on the existing lattice tower located in Windsor Locks, Connecticut.

The host tower is a 195-ft, three legged, lattice tower originally manufactured by PiROD Inc.; Eng. file no. A-115761, drawing no(s). 204960B 1-8 dated June 11, 1999 (Rev. C). The tower geometry, structure member sizes and foundation information were taken from a previous structural report prepared by Centek engineering job no. 13001.072 dated January 14, 2014.

Antenna and appurtenance inventory were taken from the aforementioned Centek structural report, a tower inventory sheet dated February 5, 2015 provided by MCM and a Verizon RF data sheet.

The tower is made of eleven (11) tapered vertical sections consisting of PiROD truss and solid round steel pipe legs. Diagonal and horizontal lateral support bracing consists of solid round and steel angle shapes. All connections were bolted connections. The width of the tower face is 4.0-ft at the top and 20.0-ft at the base.

Verizon Wireless proposes the removal of six (6) panel antennas and three (3) remote radio heads and the installation of six (6) panel antennas, nine (9) remote radio heads and one (1) main distribution box mounted on three (3) existing T-Frames. Refer to the Antenna and Appurtenance Summary below for a detailed description of the proposed antenna and appurtenance configuration.

Antenna and Appurtenance Summary

The existing and proposed loads considered in the analysis consist of the following:

- MESSAGE CENTER MANAGEMENT (Existing):
  Antenna: One (1) flash beacon light and one (1) lightning rod mounted with an elevation of ±200-ft above grade level.
  Coax Cable: One (1) 1" rigid conduit on a leg/face of the existing tower as specified in Section 3 of this report.
- TOWN (Existing):
  Antenna: One (1) 20-ft (4)-Bay dipole leg mounted with an elevation of ±199-ft above grade level.
  Coax Cable: One (1) 7/8" ∅ coax cable running on a leg/face of the existing tower as specified in Section 3 of this report.
- TOWN (Existing):
  Antenna: Four (4) 20-ft (4)-Bay dipoles, two (2) 20-ft Omni-directional whip antennas, one (1) 12-ft Omni-directional whip antenna and one (1) 10-ft Omni-directional whip antenna mounted on three (3) 15' T-Frames with an elevation of ±176-ft above grade level.
  Coax Cable: Eight (8) 7/8" ∅ coax cables running on a leg/face of the existing tower as specified in Section 3 of this report.

- AT&T (Existing):
  Antennas: Three (3) Kathrein 800-10121 panel antennas, three (3) Andrew SBNH-1D6565C panel antennas, six (6) Powerwave LGP21401 TMA's, six (6) Ericsson RRUS-11 remote radio heads and one (1) Raycap DC6-48-60-18-8F surge arrestor mounted on three (3) 15' T-Frames with a RAD center elevation of ±165-ft above grade level.
  Coax Cables: Nine (9) 1-5/8" ∅ coax cables running on a leg/face of the existing tower as specified in Section 3 of this report. Two (2) DC trunks and one (1) fiber trunk running within a 3" flex conduit on a leg/face of the existing tower as specified in Section 3 of this report.
- T-MOBILE (Existing):
  Antennas: Three (3) EMS RR90-17-02DP panel antennas, three (3) RFS APX16DWV-16DWVS-A20 panel antennas, three (3) Andrew LNX-6515DS panel antennas and twelve (12) Ericsson KRY 112 TMA's mounted on three (3) 15' T-Frames with a RAD center elevation of ±140-ft above grade level.
  Coax Cables: Eighteen (18) 1-5/8" ∅ coax cables running on a leg/face of the existing tower as specified in Section 3 of this report.
- METROPCS (Existing):
  Antennas: Three (3) RFS APXV18-206517-C panel antennas flush mounted to the tower legs with a RAD center elevation of ±130-ft above grade level.
  Coax Cables: Six (6) 1-5/8" ∅ coax cables running on a leg/face of the existing tower as specified in Section 3 of this report.
- SPRINT (Existing):
  Antennas: Three (3) RFS APXVTM14 panel antennas, six (6) RFS APXVSPP18-C-A20 panel antennas, three (3) ALU 1900 MHz RRH's, three (3) ALU 800 MHz RRH's and three (3) TD-RRH8x20 remote radio heads mounted on three (3) 15' boom gates with a RAD center elevation of ±119-ft above grade level.
  Coax Cables: Four (4) 1-1/4" ∅ fiber cables running on a leg/face of the existing tower as specified in Section 3 of this report.
- CLEARWIRE (Existing):
  Antennas: Three (3) Argus LLPX310R panel antennas, three (3) Samsung RRU and three (3) Andrew VHLP2-23 dishes mounted on three (3) dual standoff mounts with a RAD center elevation of ±109-ft above grade level.
  Coax Cables: Two (2) 1/2" ∅ coax cables running on a leg/face of the existing tower as specified in Section 3 of this report. Six (6) 5/8" ∅ and six (6) 5/16" ∅ cables running within two (2) 3" flex conduits on a leg/face of the existing tower as specified in Section 3 of this report.
- MESSAGE CENTER MANAGEMENT (Existing):
  Antenna: Three (3) beacons mounted with an elevation of ±99-ft above grade level.
  Coax Cable: Three (3) 1/2" ∅ electrical cables running on a leg/face of the existing tower as specified in Section 3 of this report.

- SPRINT (Existing):
  Antennas: One (1) GPS antenna mounted on a one (1) 1' Standoff with a RAD center elevation of ±78-ft above grade level.
  Coax Cables: One (1) 1/2" ∅ coax cable running on a leg/face of the existing tower as specified in Section 3 of this report.
- VERIZON (Existing to Remain):
  Antennas: One (1) Andrew LNX-6514DS panel antenna, five (5) Antel BXA-70063-6CF panel antennas, six (6) RFS FD9R6004/2C-3L diplexers and one (1) RFS DB-T1-6Z-8AB-0Z main distribution box mounted on three (3) 15' T-Frames with a RAD center elevation of ±150-ft above grade level.
  Coax Cables: Twelve (12) 1-5/8" ∅ coax cables and one (1) 1-5/8" ∅ fiber cable running on a leg/face of the existing tower as specified in Section 3 of this report.
- VERIZON (Existing to Remove):
  Antennas: Three (3) Antel BXA-185060-12CF panel antennas, three (3) BXA-171063-12CF panel antennas and three (3) Alcatel-Lucent RRH2x40-AWS Remote Radio Heads mounted on three (3) 15' T-Frames with a RAD center elevation of ±150-ft above grade level.
- **VERIZON (Proposed):**
  Antennas: Six (6) Andrew SBNHH-1D65B panel antennas, three (3) Alcatel-Lucent RRH2x60-LTE remote radio heads, three (3) Alcatel-Lucent RRH4x45/2x90-AWS remote radio heads, three (3) Alcatel-Lucent RRH2x60-PCS remote radio heads and one (1) RFS DB-T1-6Z-8AB-0Z distribution box mounted on three (3) 15' T-Frames with a RAD center elevation of ±150-ft above grade level.
  Coax Cables: One (1) 1-5/8" ∅ fiber cable running on a leg/face of the existing tower as specified in Section 3 of this report.

Primary Assumptions Used in the Analysis

- The tower structure's theoretical capacity not including any assessment of the condition of the tower.
- The tower carries the horizontal and vertical loads due to the weight of antennas, ice load and wind.
- Tower is properly installed and maintained.
- Tower is in plumb condition.
- Tower loading for antennas and mounts as listed in this report.
- All bolts are appropriately tightened providing the necessary connection continuity.
- All welds are fabricated with ER-70S-6 electrodes.
- All members are assumed to be as specified in the original tower design documents.
- All members are "hot dipped" galvanized in accordance with ASTM A123 and ASTM A153 Standards.
- All member protective coatings are in good condition.
- All tower members were properly designed, detailed, fabricated, installed and have been properly maintained since erection.
- Any deviation from the analyzed antenna loading will require a new analysis for verification of structural adequacy.
- All coax cables should be routed as specified in section 3 of this report.

Analysis

The existing tower was analyzed using a comprehensive computer program entitled tnxTower. The program analyzes the tower, considering the worst case loading condition. The tower is considered as loaded by concentric forces along the tower shaft, and the model assumes that the shaft members are subjected to bending, axial, and shear forces.

The existing tower was analyzed for the controlling basic wind speed (fastest mile) with no ice and a 75% reduction of wind force with ½ inch accumulative ice to determine stresses in members as per guidelines of TIA/EIA-222-F-96 entitled "Structural Standards for Steel Antenna Towers and Antenna Supporting Structures", the American Institute of Steel Construction (AISC) and the Manual of Steel Construction; Allowable Stress Design (ASD).

The controlling wind speed is determined by evaluating the local available wind speed data as provided in Appendix K of the CSBC[1] and the wind speed data available in the TIA/EIA-222-F-96 Standard. The higher of the two wind speeds is utilized in preparation of the tower analysis.

Tower Loading

Tower loading was determined by the basic wind speed as applied to projected surface areas with modification factors per TIA/EIA-222-F, gravity loads of the tower structure and its components, and the application of ½" radial ice on the tower structure and its components.

Basic Wind Speed:	Hartford; v = 80 mph (fastest mile)	*[Section 16 of TIA/EIA-222-F-96]*
	Windsor Locks; v = 95 mph (3 second gust) equivalent to v = 77.5 mph (fastest mile)	*[Appendix K of the 2005 CT Building Code Supplement]*
	TIA/EIA-222-F wind speed controls.	
Load Cases:	Load Case 1; 80 mph wind speed w/ no ice plus gravity load – used in calculation of tower stresses and rotation.	*[Section 2.3.16 of TIA/EIA-222-F-96]*
	Load Case 2; 69 mph wind speed w/ ½" radial ice plus gravity load – used in calculation of tower stresses. The 69 mph wind speed velocity represents 75% of the wind pressure generated by the 80 mph wind speed.	*[Section 2.3.16 of TIA/EIA-222-F-96]*
	Load Case 3; Seismic – not checked	*[Section 1614.5 of State Bldg. Code 2005] does not control in the design of this structure type*

[1] The 2005 Connecticut State Building Code as amended by the 2009 CT State Supplement. (CSBC)

Tower Capacity

Tower stresses were calculated utilizing the structural analysis software tnxTower. Allowable stresses were determined based on Table 5 of the TIA/EIA code with a 1/3 increase per Section 3.1.1.1 of the same code.

- Calculated stresses were found to be within allowable limits. In Load Case 2, per tnxTower "Section Capacity Table", this tower was found to be at **86.3%** of its total capacity.

Tower Section	Elevation	Stress Ratio (percentage of capacity)	Result
Diagonal (T11)	4'-0"-24'-0"	86.3%	**PASS**
Leg (T9)	44'-0"-64'-0"	77.1%	**PASS**

Foundation and Anchors

The existing foundation consists of three (3) 5-ft ∅ x 11.5-ft long reinforced concrete piers on a 29.5-ft square x 3.5-ft thick reinforced concrete pad bearing directly on existing sub grade. The sub-grade conditions used in the analysis of the existing foundation were obtained from the aforementioned structural report prepared by Centek. Tower legs are connected to the foundation by means of (6) 1.25"∅, ASTM A687 anchor bolts per leg, embedded into the concrete foundation structure.

- The tower reactions developed from the governing Load Case 2 were used in the verification of the foundation:

Reactions	Vector	Proposed Base Reactions
Base	Shear	**52 kips**
	Compression	**86 kips**
	Moment	**5479 kip-ft**
Leg	Shear	**36 kips**
	Uplift	**282 kips**
	Compression	**345 kips**

- The anchor bolts were found to be within allowable limits.

Tower Component	Design Limit	Stress Ratio (percentage of capacity)	Result
Anchor Bolts	Tension	56.0%	**PASS**

- The foundation was found to be within allowable limits.

Foundation	Design Limit	IBC 2003/2005 CT State Building Code Section 3108.4.2 (FS)(1)	Proposed Loading (FS)(1)	Result
Reinforced Concrete Mat	OM(2)	2.0	3.08	**PASS**

Note 1: FS denotes Factor of Safety
Note 2: OM denotes Overturning Moment.

Conclusion

This analysis shows that the subject tower **is adequate** to support the proposed modified antenna configuration.

The analysis is based, in part, on the information provided to this office by Verizon Wireless. If the existing conditions are different than the information in this report, Centek Engineering, Inc. must be contacted for resolution of any potential issues.

Please feel free to call with any questions or comments.

Respectfully Submitted by:

STATE OF CONNECTICUT
TIMOTHY J. LYNN
No. 29336
LICENSED
PROFESSIONAL ENGINEER

Timothy J. Lynn, PE
Structural Engineer

Standard Conditions for Furnishing of Professional Engineering Services on Existing Structures

All engineering services are performed on the basis that the information used is current and correct. This information may consist of, but is not necessarily limited to:

- Information supplied by the client regarding the structure itself, its foundations, the soil conditions, the antenna and feed line loading on the structure and its components, or other relevant information.
- Information from the field and/or drawings in the possession of Centek Engineering, Inc. or generated by field inspections or measurements of the structure.
- It is the responsibility of the client to ensure that the information provided to Centek Engineering, Inc. and used in the performance of our engineering services is correct and complete. In the absence of information to the contrary, we assume that all structures were constructed in accordance with the drawings and specifications and are in an un-corroded condition and have not deteriorated. It is therefore assumed that its capacity has not significantly changed from the "as new" condition.
- All services will be performed to the codes specified by the client, and we do not imply to meet any other codes or requirements unless explicitly agreed in writing. If wind and ice loads or other relevant parameters are to be different from the minimum values recommended by the codes, the client shall specify the exact requirement. In the absence of information to the contrary, all work will be performed in accordance with the latest revision of ANSI/ASCE10 & ANSI/EIA-222
- All services performed, results obtained, and recommendations made are in accordance with generally accepted engineering principles and practices. Centek Engineering, Inc. is not responsible for the conclusions, opinions and recommendations made by others based on the information we supply.

GENERAL DESCRIPTION OF STRUCTURAL ANALYSIS PROGRAM

tnxTower, is an integrated structural analysis and design software package for Designed specifically for the telecommunications industry, tnxTower, formerly ERITower, automates much of the tower analysis and design required by the TIA/EIA 222 Standard.

tnxTower Features:

- tnxTower can analyze and design 3- and 4-sided guyed towers, 3- and 4-sided self-supporting towers and either round or tapered ground mounted poles with or without guys.
- The program analyzes towers using the TIA-222-G (2005) standard or any of the previous TIA/EIA standards back to RS-222 (1959). Steel design is checked using the AISC ASD 9th Edition or the AISC LRFD specifications.
- Linear and non-linear (P-delta) analyses can be used in determining displacements and forces in the structure. Wind pressures and forces are automatically calculated.
- Extensive graphics plots include material take-off, shear-moment, leg compression, displacement, twist, feed line, guy anchor and stress plots.
- tnxTower contains unique features such as True Cable behavior, hog rod take-up, foundation stiffness and much more.

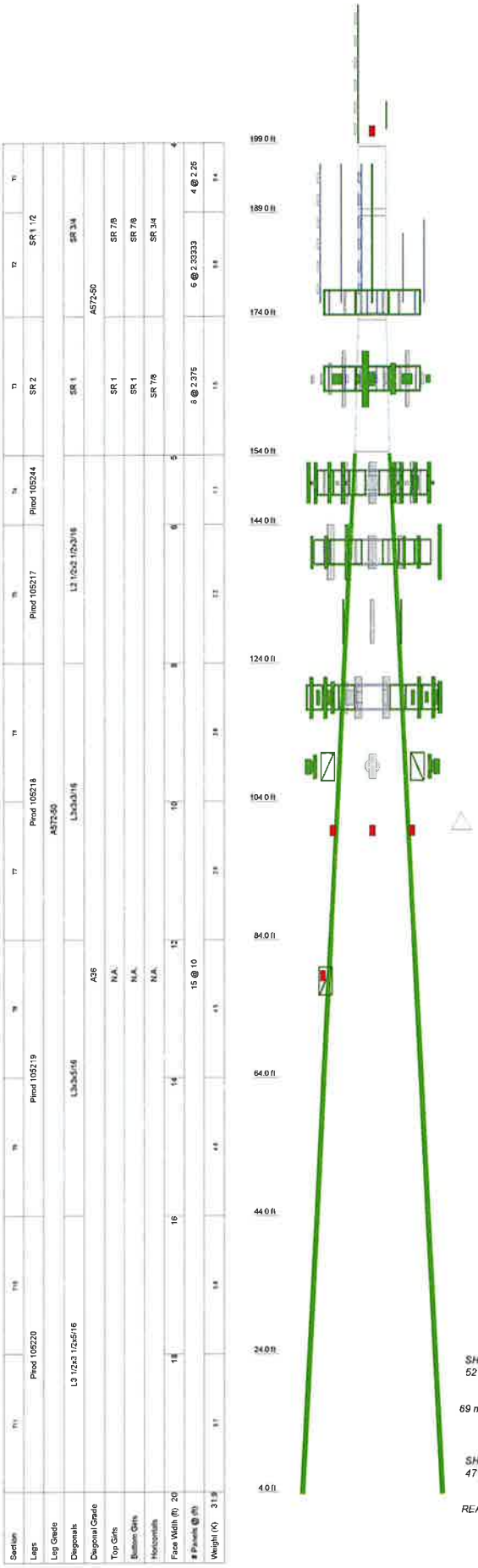

MAX. CORNER REACTIONS AT BASE:
DOWN: 345 K
UPLIFT: -282 K
SHEAR: 36 K

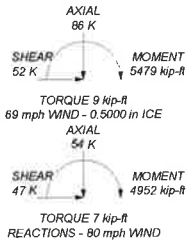

TORQUE 9 kip-ft
69 mph WIND - 0.5000 in ICE

TORQUE 7 kip-ft
REACTIONS - 80 mph WIND

DESIGNED APPURTENANCE LOADING

TYPE	ELEVATION	TYPE	ELEVATION
4-ft Lightning Rod (MCM)	200	DB-T1-6Z-8AB-0Z (Verizon - Existing)	150
Flash Beacon Lighting (MCM)	200	15' T-Frame (T-Mobile - Existing)	140
DB224 (Town - Existing)	199	15' T-Frame (T-Mobile - Existing)	140
15' T-Frame (Town - Existing)	176	15' T-Frame (T-Mobile - Existing)	140
15' T-Frame (Town - Existing)	176	RR90-17-02DP (T-Mobile - Existing)	140
15' T-Frame (Town - Existing)	176	RR90-17-02DP (T-Mobile - Existing)	140
DB224 (Town - Existing)	176	RR90-17-02DP (T-Mobile - Existing)	140
20' x 2" Dia Omni (Town - Existing)	176	(4) KRY 112 TMA (T-Mobile - Existing)	140
DB224 (Town - Existing)	176	(4) KRY 112 TMA (T-Mobile - Existing)	140
10' x 3" Dia Omni (Town - Existing)	176	(4) KRY 112 TMA (T-Mobile - Existing)	140
12' x 3" Dia Omni (Town - Existing)	176	LNX-6515DS (T-Mobile - Existing)	140
DB224 (Town - Existing)	176	LNX-6515DS (T-Mobile - Existing)	140
20' x 2" Dia Omni (Town - Existing)	176	LNX-6515DS (T-Mobile - Existing)	140
DB224 (Town - Existing)	176	APX16DWV-16DWVS-E-A20 (T-Mobile - Existing)	140
15' T-Frame (ATT - Existing)	165	APX16DWV-16DWVS-E-A20 (T-Mobile - Existing)	140
15' T-Frame (ATT - Existing)	165	APX16DWV-16DWVS-E-A20 (T-Mobile - Existing)	140
15' T-Frame (ATT - Existing)	165	APXV18-206517-C (MetroPCS - Existing)	130
800-10121 (ATT - Existing)	165	APXV18-206517-C (MetroPCS - Existing)	130
(2) LGP21401 TMA (ATT - Existing)	165	APXV18-206517-C (MetroPCS - Existing)	130
SBNH-1D6565C (ATT - Existing)	165	ROHN 6'x15' Boom Gate (1) (Sprint - Existing)	119
(2) RRUS-11 (ATT - Existing)	165	ROHN 6'x15' Boom Gate (1) (Sprint - Existing)	119
800-10121 (ATT - Existing)	165	ROHN 6'x15' Boom Gate (1) (Sprint - Existing)	119
(2) LGP21401 TMA (ATT - Existing)	165	APXVTM14 (Sprint - Existing)	119
SBNH-1D6565C (ATT - Existing)	165	APXVSPP18-C-A20 (Sprint - Existing)	119
(2) RRUS-11 (ATT - Existing)	165	APXVSPP18-C-A20 (Sprint - Existing)	119
800-10121 (ATT - Existing)	165	APXVTM14 (Sprint - Existing)	119
(2) LGP21401 TMA (ATT - Existing)	165	APXVSPP18-C-A20 (Sprint - Existing)	119
SBNH-1D6565C (ATT - Existing)	165	APXVSPP18-C-A20 (Sprint - Existing)	119
(2) RRUS-11 (ATT - Existing)	165	APXVTM14 (Sprint - Existing)	119
DC6-48-60-18-8F Surge Arrestor (ATT - Existing)	165	APXVSPP18-C-A20 (Sprint - Existing)	119
15' T-Frame (Verizon - Existing)	150	APXVSPP18-C-A20 (Sprint - Existing)	119
15' T-Frame (Verizon - Existing)	150	FD-RRH 2x50 800 (Sprint - Existing)	119
15' T-Frame (Verizon - Existing)	150	FD-RRH 2x50 800 (Sprint - Existing)	119
SBNHH-1D65B (Verizon - Proposed)	150	FD-RRH 2x50 800 (Sprint - Existing)	119
LNX-6514DS-T4M (Verizon - Existing)	150	FD-RRH 4x45 1900 (Sprint - Existing)	119
SBNHH-1D65B (Verizon - Proposed)	150	FD-RRH 4x45 1900 (Sprint - Existing)	119
BXA-70063/6CF (Verizon - Existing)	150	FD-RRH 4x45 1900 (Sprint - Existing)	119
SBNHH-1D65B (Verizon - Proposed)	150	TD-RRHBx20-25 (Sprint - Existing)	119
BXA-70063/6CF (Verizon - Existing)	150	TD-RRHBx20-25 (Sprint - Existing)	119
SBNHH-1D65B (Verizon - Proposed)	150	TD-RRHBx20-25 (Sprint - Existing)	119
BXA-70063/6CF (Verizon - Existing)	150	4-ft Dual Mount Standoff (Clearwire - Existing)	109
SBNHH-1D65B (Verizon - Proposed)	150	4-ft Dual Mount Standoff (Clearwire - Existing)	109
BXA-70063/6CF (Verizon - Existing)	150	4-ft Dual Mount Standoff (Clearwire - Existing)	109
SBNHH-1D65B (Verizon - Proposed)	150	LLPX310R (Clearwire - Existing)	109
BXA-70063/6CF (Verizon - Existing)	150	LLPX310R (Clearwire - Existing)	109
(2) FD9R6004/2C-3L Diplexer (Verizon - Existing)	150	LLPX310R (Clearwire - Existing)	109
(2) FD9R6004/2C-3L Diplexer (Verizon - Existing)	150	RRU (Clearwire - Existing)	109
(2) FD9R6004/2C-3L Diplexer (Verizon - Existing)	150	RRU (Clearwire - Existing)	109
RRH4x45/2x90-AWS (Verizon - Proposed)	150	RRU (Clearwire - Existing)	109
RRH4x45/2x90-AWS (Verizon - Proposed)	150	VHLP2-23 (Clearwire - Existing)	109
RRH4x45/2x90-AWS (Verizon - Proposed)	150	VHLP2-23 (Clearwire - Existing)	109
RRH2x60-PCS (Verizon - Proposed)	150	VHLP2-23 (Clearwire - Reserved)	109
RRH2x60-PCS (Verizon - Proposed)	150	Beacon (MCM)	99
RRH2x60-PCS (Verizon - Proposed)	150	Beacon (MCM)	99
RRH2x60-07-U (Verizon - Proposed)	150	Beacon (MCM)	99
RRH2x60-07-U (Verizon - Proposed)	150	1' Standoff (Sprint - Existing)	78
RRH2x60-07-U (Verizon - Proposed)	150	GPS (Sprint - Existing)	78
DB-T1-6Z-8AB-0Z (Verizon - Proposed)	150		

MATERIAL STRENGTH

GRADE	Fy	Fu	GRADE	Fy	Fu
A572-50	50 ksi	65 ksi	A36	36 ksi	58 ksi

TOWER DESIGN NOTES

1. Tower designed for a 80 mph basic wind in accordance with the TIA/EIA-222-F Standard.
2. Tower is also designed for a 69 mph basic wind with 0.50 in ice.
3. Deflections are based upon a 50 mph wind.
4. TOWER RATING: 86.3%

Centek Engineering Inc.
63-2 North Branford Rd.
Branford, CT 06405
Phone: (203) 488-0580
FAX: (203) 488-8587

Job: 15001.074 - Windsor Locks NE			
Project: 195' Valmont Lattice Tower - 4 Volunteer Dr., Windsor Locks, CT			
Client: Verizon Wireless	Drawn by: TJL		Appr'd:
Code: TIA/EIA-222-F	Date: 09/01/15		Scale: NTS
Path:			Dwg No. E-1

Round Flat App In Face App Out Face Truss-Leg

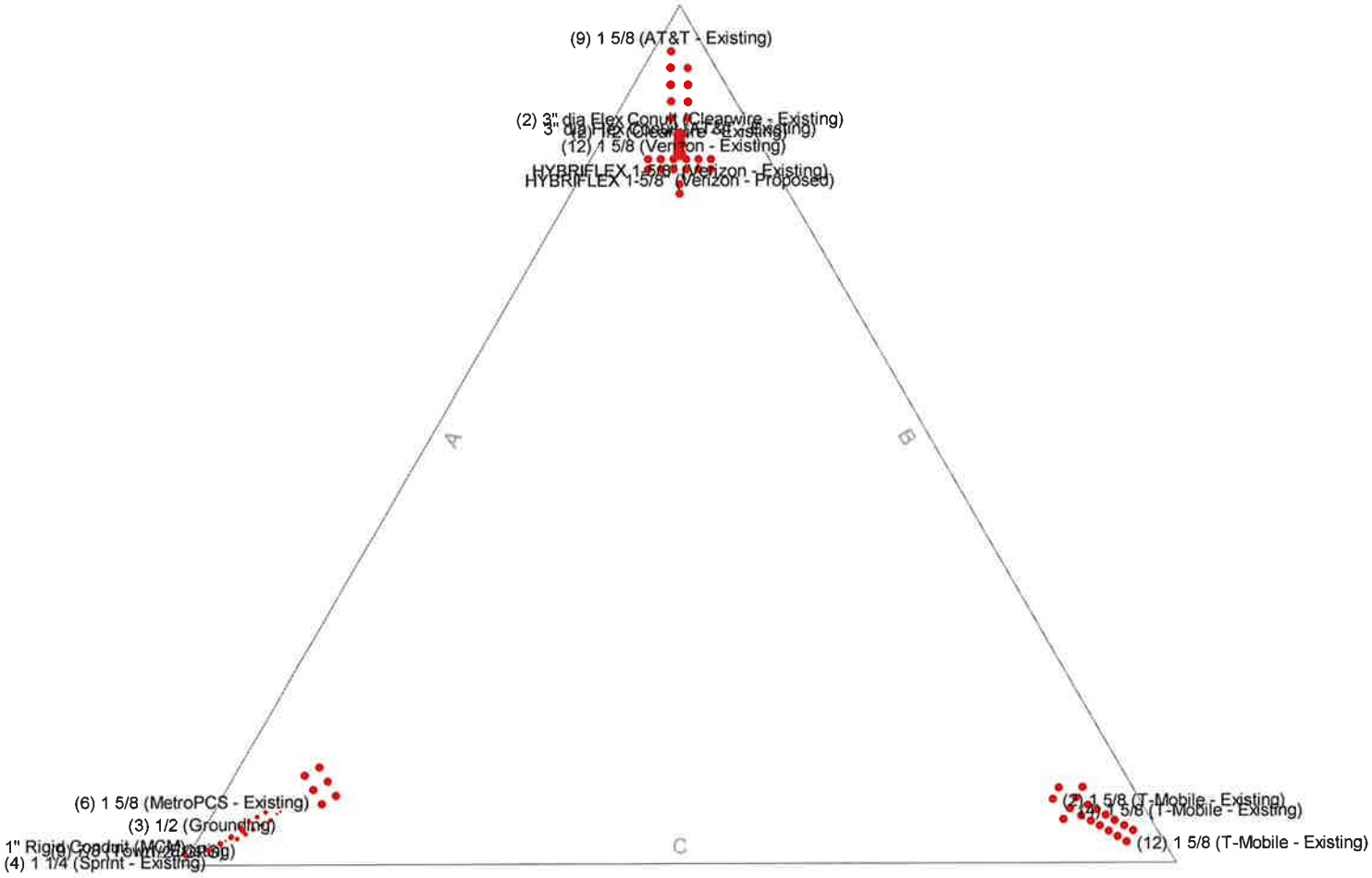

Centek Engineering Inc. 63-2 North Branford Rd. Branford, CT 06405 Phone: (203) 488-0580 FAX: (203) 488-8587	Job: ***15001.074 - Windsor Locks NE***		
	Project: ***195' Valmont Lattice Tower - 4 Volunteer Dr., Windsor Locks,***		
	Client: Verizon Wireless	Drawn by: TJL	App'd:
	Code: TIA/EIA-222-F	Date: 09/01/15	Scale: NTS
	Path:		Dwg No. E-7

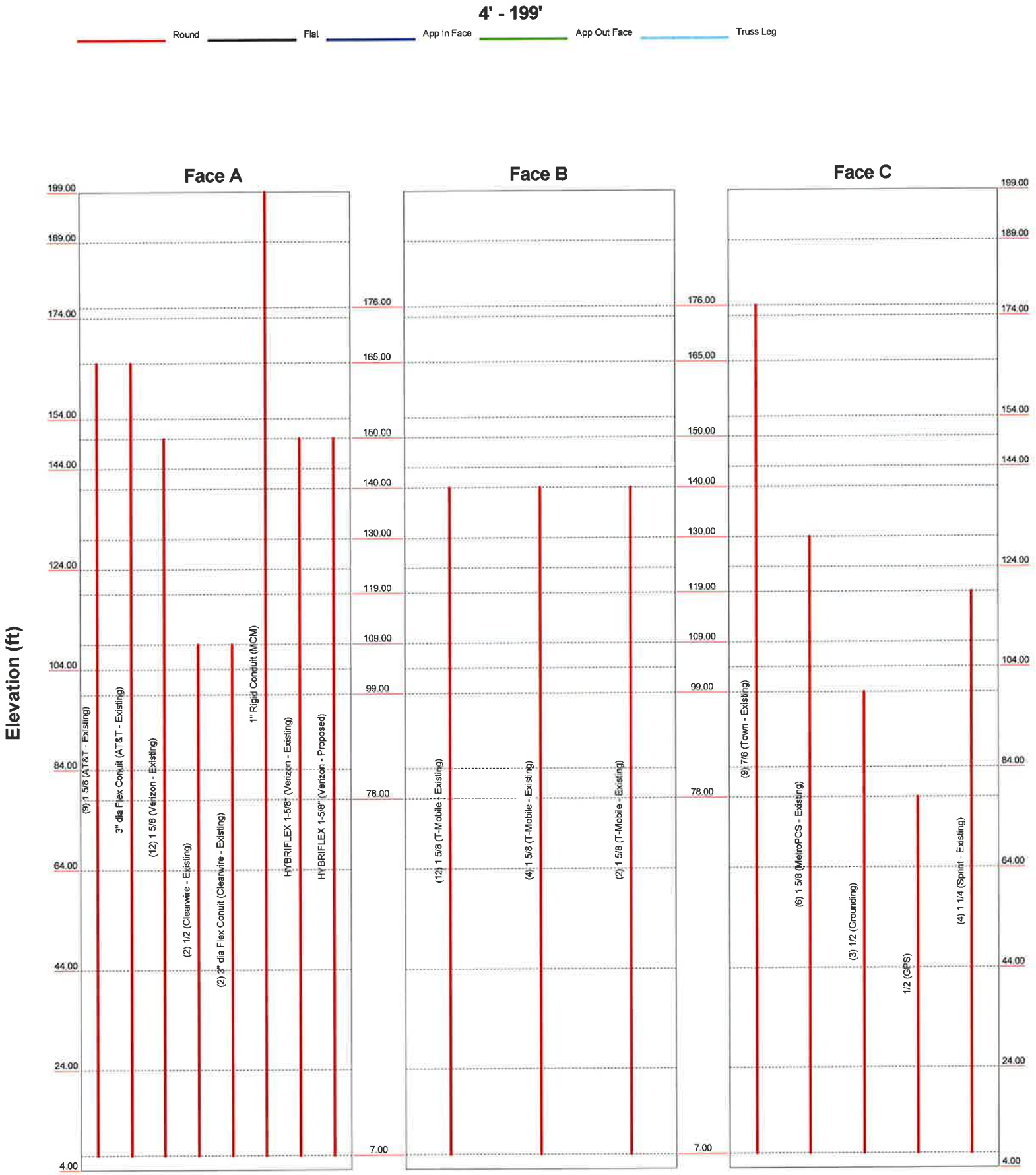

Centek Engineering Inc. 63-2 North Branford Rd. Branford, CT 06405 Phone: (203) 488-0580 FAX: (203) 488-8587	Job: **15001.074 - Windsor Locks NE**		
	Project: ***195' Valmont Lattice Tower - 4 Volunteer Dr., Windsor Locks,***		
	Client: Verizon Wireless	Drawn by: TJL	App'd:
	Code: TIA/EIA-222-F	Date: 09/01/15	Scale: NTS
	Path:		Dwg No. E-7

Tower Input Data

The main tower is a 3x free standing tower with an overall height of 199.00 ft above the ground line.
The base of the tower is set at an elevation of 4.00 ft above the ground line.
The face width of the tower is 4.00 ft at the top and 20.00 ft at the base.
This tower is designed using the TIA/EIA-222-F standard.
The following design criteria apply:

Basic wind speed of 80 mph.
Nominal ice thickness of 0.5000 in.
Ice density of 56 pcf.
A wind speed of 69 mph is used in combination with ice.
Temperature drop of 50 °F.
Deflections calculated using a wind speed of 50 mph.
A non-linear (P-delta) analysis was used.
Pressures are calculated at each section.
Stress ratio used in tower member design is 1.333.
Local bending stresses due to climbing loads, feedline supports, and appurtenance mounts are not considered.

Options

Consider Moments - Legs
Consider Moments - Horizontals
Consider Moments - Diagonals
Use Moment Magnification
√ Use Code Stress Ratios
√ Use Code Safety Factors - Guys
Escalate Ice
Always Use Max Kz
Use Special Wind Profile
√ Include Bolts In Member Capacity
Leg Bolts Are At Top Of Section
Secondary Horizontal Braces Leg
Use Diamond Inner Bracing (4 Sided)
Add IBC .6D+W Combination

Distribute Leg Loads As Uniform
Assume Legs Pinned
√ Assume Rigid Index Plate
√ Use Clear Spans For Wind Area
√ Use Clear Spans For KL/r
Retension Guys To Initial Tension
Bypass Mast Stability Checks
√ Use Azimuth Dish Coefficients
√ Project Wind Area of Appurt.
Autocalc Torque Arm Areas
√ SR Members Have Cut Ends
√ Sort Capacity Reports By Component
Triangulate Diamond Inner Bracing

Treat Feedline Bundles As Cylinder
Use ASCE 10 X-Brace Ly Rules
√ Calculate Redundant Bracing Forces
Ignore Redundant Members in FEA
√ SR Leg Bolts Resist Compression
√ All Leg Panels Have Same Allowable
Offset Girt At Foundation
√ Consider Feedline Torque
Include Angle Block Shear Check

Poles

Include Shear-Torsion Interaction
Always Use Sub-Critical Flow
Use Top Mounted Sockets

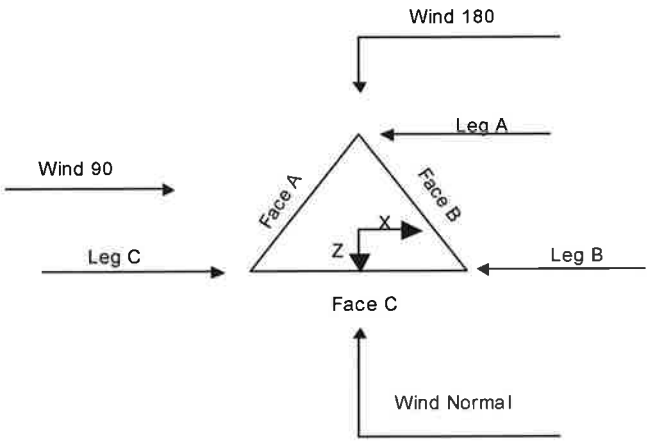

Triangular Tower

Tower Section Geometry

Tower Section	Tower Elevation ft	Assembly Database	Description	Section Width ft	Number of Sections	Section Length ft
T1	199.00-189.00		V4 106778	4.00	1	10.00
T2	189.00-174.00		V4 106778	4.00	1	15.00
T3	174.00-154.00		H5.0 114529	4.00	1	20.00
T4	154.00-144.00		U6.0 105245	5.00	1	10.00
T5	144.00-124.00		U8.0 105216	6.00	1	20.00
T6	124.00-104.00		U10.0 105217 L2 1/2x3/16	8.00	1	20.00
T7	104.00-84.00		U12.0 105218	10.00	1	20.00
T8	84.00-64.00		U14.0 105218	12.00	1	20.00
T9	64.00-44.00		U16.0 105219	14.00	1	20.00
T10	44.00-24.00		U18.0 105219	16.00	1	20.00
T11	24.00-4.00		U20.0 105219 L3.5x5/16	18.00	1	20.00

Tower Section Geometry *(cont'd)*

Tower Section	Tower Elevation ft	Diagonal Spacing ft	Bracing Type	Has K Brace End Panels	Has Horizontals	Top Girt Offset in	Bottom Girt Offset in
T1	199.00-189.00	2.25	X Brace	No	Steps	6.0000	6.0000
T2	189.00-174.00	2.33	X Brace	No	Steps	6.0000	6.0000
T3	174.00-154.00	2.38	X Brace	No	Steps	6.0000	6.0000
T4	154.00-144.00	10.00	X Brace	No	No	0.0000	0.0000

Tower Section	Tower Elevation ft	Diagonal Spacing ft	Bracing Type	Has K Brace End Panels	Has Horizontals	Top Girt Offset in	Bottom Girt Offset in
T5	144.00-124.00	10.00	X Brace	No	No	0.0000	0.0000
T6	124.00-104.00	10.00	X Brace	No	No	0.0000	0.0000
T7	104.00-84.00	10.00	X Brace	No	No	0.0000	0.0000
T8	84.00-64.00	10.00	X Brace	No	No	0.0000	0.0000
T9	64.00-44.00	10.00	X Brace	No	No	0.0000	0.0000
T10	44.00-24.00	10.00	X Brace	No	No	0.0000	0.0000
T11	24.00-4.00	10.00	X Brace	No	No	0.0000	0.0000

Tower Section Geometry *(cont'd)*

Tower Elevation ft	Leg Type	Leg Size	Leg Grade	Diagonal Type	Diagonal Size	Diagonal Grade
T1 199.00-189.00	Solid Round	1 1/2	A572-50 (50 ksi)	Solid Round	3/4	A572-50 (50 ksi)
T2 189.00-174.00	Solid Round	1 1/2	A572-50 (50 ksi)	Solid Round	3/4	A572-50 (50 ksi)
T3 174.00-154.00	Solid Round	2	A572-50 (50 ksi)	Solid Round	1	A572-50 (50 ksi)
T4 154.00-144.00	Truss Leg	Pirod 105244	A572-50 (50 ksi)	Single Angle	L2 1/2x2 1/2x3/16	A36 (36 ksi)
T5 144.00-124.00	Truss Leg	Pirod 105217	A572-50 (50 ksi)	Single Angle	L2 1/2x2 1/2x3/16	A36 (36 ksi)
T6 124.00-104.00	Truss Leg	Pirod 105218	A572-50 (50 ksi)	Single Angle	L3x3x3/16	A36 (36 ksi)
T7 104.00-84.00	Truss Leg	Pirod 105218	A572-50 (50 ksi)	Single Angle	L3x3x3/16	A36 (36 ksi)
T8 84.00-64.00	Truss Leg	Pirod 105219	A572-50 (50 ksi)	Single Angle	L3x3x5/16	A36 (36 ksi)
T9 64.00-44.00	Truss Leg	Pirod 105219	A572-50 (50 ksi)	Single Angle	L3x3x5/16	A36 (36 ksi)
T10 44.00-24.00	Truss Leg	Pirod 105220	A572-50 (50 ksi)	Single Angle	L3 1/2x3 1/2x5/16	A36 (36 ksi)
T11 24.00-4.00	Truss Leg	Pirod 105220	A572-50 (50 ksi)	Single Angle	L3 1/2x3 1/2x5/16	A36 (36 ksi)

Tower Section Geometry *(cont'd)*

Tower Elevation ft	Top Girt Type	Top Girt Size	Top Girt Grade	Bottom Girt Type	Bottom Girt Size	Bottom Girt Grade
T1 199.00-189.00	Solid Round	7/8	A572-50 (50 ksi)	Solid Round	7/8	A572-50 (50 ksi)
T2 189.00-174.00	Solid Round	7/8	A572-50 (50 ksi)	Solid Round	7/8	A572-50 (50 ksi)
T3 174.00-154.00	Solid Round	1	A572-50 (50 ksi)	Solid Round	1	A572-50 (50 ksi)

Tower Section Geometry *(cont'd)*

Tower Elevation ft	No. of Mid Girts	Mid Girt Type	Mid Girt Size	Mid Girt Grade	Horizontal Type	Horizontal Size	Horizontal Grade
T1 199.00-189.00	None	Solid Round		A572-50 (50 ksi)	Solid Round	3/4	A572-50 (50 ksi)
T2 189.00-174.00	None	Solid Round		A572-50 (50 ksi)	Solid Round	3/4	A572-50 (50 ksi)
T3 174.00-154.00	None	Solid Round		A572-50 (50 ksi)	Solid Round	7/8	A572-50 (50 ksi)

Tower Section Geometry *(cont'd)*

Tower Elevation ft	Gusset Area (per face) ft^2	Gusset Thickness in	Gusset Grade	Adjust. Factor A_f	Adjust. Factor A_r	Weight Mult.	Double Angle Stitch Bolt Spacing Diagonals in	Double Angle Stitch Bolt Spacing Horizontals in
T1 199.00-189.00	0.00	0.0000	A36 (36 ksi)	1	1	1.02	36.0000	36.0000
T2 189.00-174.00	0.00	0.0000	A36 (36 ksi)	1	1	1.02	36.0000	36.0000
T3 174.00-154.00	0.00	0.0000	A36 (36 ksi)	1	1	1.02	36.0000	36.0000
T4 154.00-144.00	0.00	0.0000	A36 (36 ksi)	1	1	1.05	36.0000	36.0000
T5 144.00-124.00	0.00	0.0000	A36 (36 ksi)	1	1	1.05	36.0000	36.0000
T6 124.00-104.00	0.00	0.0000	A36 (36 ksi)	1	1	1.05	36.0000	36.0000
T7 104.00-84.00	0.00	0.0000	A36 (36 ksi)	1	1	1.05	36.0000	36.0000
T8 84.00-64.00	0.00	0.0000	A36 (36 ksi)	1	1	1.05	36.0000	36.0000
T9 64.00-44.00	0.00	0.0000	A36 (36 ksi)	1	1	1.05	36.0000	36.0000
T10 44.00-24.00	0.00	0.0000	A36 (36 ksi)	1	1	1.05	36.0000	36.0000
T11 24.00-4.00	0.00	0.0000	A36 (36 ksi)	1	1	1.05	36.0000	36.0000

Tower Section Geometry *(cont'd)*

Tower Elevation ft	Calc K Single Angles	Calc K Solid Rounds	K Factors[1] Legs	X Brace Diags X Y	K Brace Diags X Y	Single Diags X Y	Girts X Y	Horiz. X Y	Sec. Horiz. X Y	Inner Brace X Y
T1	Yes	Yes	1	1	1	1	1	1	1	1
199.00-189.00				1	1	1	1	1	1	1
T2	Yes	Yes	1	1	1	1	1	1	1	1

Tower Elevation ft	Calc K Single Angles	Calc K Solid Rounds	K Factors[1] Legs	X Brace Diags X Y	K Brace Diags X Y	Single Diags X Y	Girts X Y	Horiz. X Y	Sec. Horiz. X Y	Inner Brace X Y
189.00-174.00				1	1	1	1	1	1	1
T3	Yes	Yes	1	1	1	1	1	1	1	1
174.00-154.00				1	1	1	1	1	1	1
T4	Yes	Yes	1	1	1	1	1	1	1	1
154.00-144.00				1	1	1	1	1	1	1
T5	Yes	Yes	1	1	1	1	1	1	1	1
144.00-124.00				1	1	1	1	1	1	1
T6	Yes	Yes	1	1	1	1	1	1	1	1
124.00-104.00				1	1	1	1	1	1	1
T7	Yes	Yes	1	1	1	1	1	1	1	1
104.00-84.00				1	1	1	1	1	1	1
T8	Yes	Yes	1	1	1	1	1	1	1	1
84.00-64.00				1	1	1	1	1	1	1
T9	Yes	Yes	1	1	1	1	1	1	1	1
64.00-44.00				1	1	1	1	1	1	1
T10	Yes	Yes	1	1	1	1	1	1	1	1
44.00-24.00				1	1	1	1	1	1	1
T11	Yes	Yes	1	1	1	1	1	1	1	1
24.00-4.00				1	1	1	1	1	1	1

[1]*Note: K factors are applied to member segment lengths. K-braces without inner supporting members will have the K factor in the out-of-plane direction applied to the overall length.*

Tower Section Geometry *(cont'd)*

Tower Elevation ft	Truss-Leg K Factors: Truss-Legs Used As Leg Members: Leg Panels	X Brace Diagonals	Z Brace Diagonals	Truss-Legs Used As Inner Members: Leg Panels	X Brace Diagonals	Z Brace Diagonals
T4 154.00-144.00	1	0.5	0.85	1	0.5	0.85
T5 144.00-124.00	1	0.5	0.85	1	0.5	0.85
T6 124.00-104.00	1	0.5	0.85	1	0.5	0.85
T7 104.00-84.00	1	0.5	0.85	1	0.5	0.85
T8 84.00-64.00	1	0.5	0.85	1	0.5	0.85
T9 64.00-44.00	1	0.5	0.85	1	0.5	0.85
T10 44.00-24.00	1	0.5	0.85	1	0.5	0.85
T11 24.00-4.00	1	0.5	0.85	1	0.5	0.85

Tower Section Geometry *(cont'd)*

Tower Elevation ft	Leg		Diagonal		Top Girt		Bottom Girt		Mid Girt		Long Horizontal		Short Horizontal	
	Net Width Deduct in	U	Net Width Deduct in	U	Net Width Deduct in	U	Net Width Deduct in	U	Net Width Deduct in	U	Net Width Deduct in	U	Net Width Deduct in	U
T1 199.00-189.00	0.0000	1	0.0000	1	0.0000	1	0.0000	1	0.0000	1	0.0000	1	0.0000	1
T2 189.00-174.00	0.0000	1	0.0000	1	0.0000	1	0.0000	1	0.0000	1	0.0000	1	0.0000	1
T3 174.00-154.00	0.0000	1	0.0000	1	0.0000	1	0.0000	1	0.0000	1	0.0000	1	0.0000	1
T4 154.00-144.00	0.0000	1	0.0000	1	0.0000	1	0.0000	1	0.0000	1	0.0000	1	0.0000	1
T5 144.00-124.00	0.0000	1	0.0000	1	0.0000	1	0.0000	1	0.0000	1	0.0000	1	0.0000	1
T6 124.00-104.00	0.0000	1	0.0000	1	0.0000	1	0.0000	1	0.0000	1	0.0000	1	0.0000	1
T7 104.00-84.00	0.0000	1	0.0000	1	0.0000	1	0.0000	1	0.0000	1	0.0000	1	0.0000	1
T8 84.00-64.00	0.0000	1	0.0000	1	0.0000	1	0.0000	1	0.0000	1	0.0000	1	0.0000	1
T9 64.00-44.00	0.0000	1	0.0000	1	0.0000	1	0.0000	1	0.0000	1	0.0000	1	0.0000	1
T10 44.00-24.00	0.0000	1	0.0000	1	0.0000	1	0.0000	1	0.0000	1	0.0000	1	0.0000	1
T11 24.00-4.00	0.0000	1	0.0000	1	0.0000	1	0.0000	1	0.0000	1	0.0000	1	0.0000	1

Tower Section Geometry *(cont'd)*

Tower Elevation ft	Leg Connection Type	Leg		Diagonal		Top Girt		Bottom Girt		Mid Girt		Long Horizontal		Short Horizontal	
		Bolt Size in	No.	Bolt Size in	No.	Bolt Size in	No.	Bolt Size in	No.	Bolt Size in	No.	Bolt Size in	No.	Bolt Size in	No.
T1 199.00-189.00	Sleeve DS	0.5625 A325N	3	0.6250 A325N	0	0.6250 A325N	0	0.6250 A325N	0	0.6250 A325N	0	0.6250 A325N	0	0.6250 A325N	0
T2 189.00-174.00	Sleeve DS	0.6250 A325N	5	0.6250 A325N	0	0.6250 A325N	0	0.6250 A325N	0	0.6250 A325N	0	0.6250 A325N	0	0.6250 A325N	0
T3 174.00-154.00	Flange	1.0000 A325N	6	0.6250 A325N	0	0.6250 A325N	0	0.6250 A325N	0	0.6250 A325N	0	0.6250 A325N	0	0.6250 A325N	0
T4 154.00-144.00	Flange	1.0000 A325N	6	1.0000 A325N	1	1.0000 A325N	1	0.6250 A325N	0	0.6250 A325N	0	0.6250 A325N	0	0.6250 A325N	0
T5 144.00-124.00	Flange	1.0000 A325N	6	1.0000 A325N	1	1.0000 A325N	0	0.6250 A325N	0	0.6250 A325N	0	0.6250 A325N	0	0.6250 A325N	0
T6 124.00-104.00	Flange	1.0000 A325N	6	1.0000 A325N	1	1.0000 A325N	0	0.6250 A325N	0	0.6250 A325N	0	0.6250 A325N	0	0.6250 A325N	0
T7 104.00-84.00	Flange	1.0000 A325N	6	1.0000 A325N	1	1.0000 A325N	0	0.6250 A325N	0	0.6250 A325N	0	0.6250 A325N	0	0.6250 A325N	0
T8 84.00-64.00	Flange	1.2500 A325N	6	1.2500 A325N	1	1.2500 A325N	0	0.6250 A325N	0	0.6250 A325X	0	0.6250 A325N	0	0.6250 A325X	0
T9 64.00-44.00	Flange	1.2500 A325N	6	1.2500 A325N	1	1.2500 A325N	0	0.6250 A325N	0	0.6250 A325X	0	0.6250 A325N	0	0.6250 A325X	0
T10 44.00-24.00	Flange	1.2500 A325N	6	1.2500 A325N	1	1.2500 A325N	0	0.6250 A325N	0	0.6250 A325X	0	0.6250 A325N	0	0.6250 A325X	0
T11 24.00-4.00	Flange	1.2500 A687	6	1.2500 A325N	1	1.2500 A325N	0	0.6250 A325N	0	0.6250 A325N	0	0.6250 A325N	0	0.6250 A325N	0

Feed Line/Linear Appurtenances - Entered As Round Or Flat

Description	Face or Leg	Allow Shield	Component Type	Placement ft	Face Offset in	Lateral Offset (Frac FW)	#	# Per Row	Clear Spacing in	Width or Diameter in	Perimeter in	Weight plf
1 5/8 (T-Mobile - Existing)	B	No	Ar (Leg)	140.00 - 7.00	0.0000	0.08	12	6	0.5000 1.0000	1.9800		1.04
1 5/8 (T-Mobile - Existing)	B	No	Ar (Leg)	140.00 - 7.00	0.0000	0.12	4	1	0.5000 1.0000	1.9800		1.04
1 5/8 (T-Mobile - Existing)	B	No	Ar (Leg)	140.00 - 7.00	0.0000	0.14	2	1	0.5000 1.0000	1.9800		1.04
1 5/8 (AT&T - Existing)	A	No	Ar (Leg)	165.00 - 7.00	0.0000	0.08	9	5	1.9800	1.9800		1.04
3" dia Flex Conuit (AT&T - Existing)	A	No	Ar (Leg)	165.00 - 7.00	0.0000	0.14	1	1	3.0000	3.0000		5.00
1 5/8 (Verizon - Existing)	A	No	Ar (Leg)	150.00 - 7.00	0.0000	0.16	12	2	0.5000 1.0000	1.9800		1.04
1/2 (Clearwire - Existing)	A	No	Ar (Leg)	109.00 - 7.00	0.0000	0.14	2	2	0.5800	0.5800		0.25
3" dia Flex Conuit (Clearwire - Existing)	A	No	Ar (Leg)	109.00 - 7.00	0.0000	0.14	2	2	1.5000	3.0000		5.00
7/8 (Town - Existing)	C	No	Ar (Leg)	176.00 - 7.00	0.0000	0.08	9	5	1.1100	1.1100		0.54
1 5/8 (MetroPCS - Existing)	C	No	Ar (Leg)	130.00 - 7.00	0.0000	0.16	6	2	1.9800	1.9800		1.04
1/2 (Grounding)	C	No	Ar (Leg)	99.00 - 7.00	0.0000	0.11	3	2	0.5000 0.5800	0.5800		0.25
1/2 (GPS)	C	No	Ar (Leg)	78.00 - 7.00	0.0000	0.05	1	1	0.5000 0.5800	0.5800		0.25
1" Rigid Conduit (MCM)	A	No	Ar (CfAe)	199.00 - 7.00	0.0000	-0.49	1	1	1.0000	1.0000		0.70
HYBRIFLEX 1-5/8" (Verizon - Existing)	A	No	Ar (Leg)	150.00 - 7.00	0.0000	0.18	1	1	1.9800	1.9800		1.90
1 1/4 (Sprint - Existing)	C	No	Ar (Leg)	119.00 - 7.00	0.0000	0.05	4	4	1.5500	1.5500		0.66
HYBRIFLEX 1-5/8" (Verizon - Proposed)	A	No	Ar (Leg)	150.00 - 7.00	0.0000	0.19	1	1	1.9800	1.9800		1.90

Feed Line/Linear Appurtenances Section Areas

Tower Section	Tower Elevation ft	Face	A_R ft^2	A_F ft^2	C_AA_A In Face ft^2	C_AA_A Out Face ft^2	Weight K
T1	199.00-189.00	A	0.833	0.000	0.000	0.000	0.01
		B	0.000	0.000	0.000	0.000	0.00
		C	0.000	0.000	0.000	0.000	0.00
T2	189.00-174.00	A	2.175	0.000	0.000	0.000	0.01
		B	0.000	0.000	0.000	0.000	0.00
		C	0.925	0.000	0.000	0.000	0.01
T3	174.00-154.00	A	22.742	0.000	0.000	0.000	0.17
		B	11.825	0.000	0.000	0.000	0.00
		C	9.250	0.000	0.000	0.000	0.10
T4	154.00-144.00	A	20.168	0.000	0.000	0.000	0.25
		B	14.710	0.000	0.000	0.000	0.00
		C	4.625	0.000	0.000	0.000	0.05
T5	144.00-124.00	A	47.597	0.000	0.000	0.000	0.63
		B	55.820	0.000	0.000	0.000	0.30
		C	32.350	0.000	0.000	0.000	0.13
T6	124.00-104.00	A	62.950	0.000	0.000	0.000	0.68
		B	64.083	0.000	0.000	0.000	0.37
		C	50.000	0.000	0.000	0.000	0.26
T7	104.00-84.00	A	75.933	0.000	0.000	0.000	0.84
		B	73.033	0.000	0.000	0.000	0.37
		C	54.033	0.000	0.000	0.000	0.29
T8	84.00-64.00	A	77.093	0.000	0.000	0.000	0.84
		B	73.033	0.000	0.000	0.000	0.37
		C	55.193	0.000	0.000	0.000	0.29
T9	64.00-44.00	A	77.383	0.000	0.000	0.000	0.84
		B	73.033	0.000	0.000	0.000	0.37
		C	55.483	0.000	0.000	0.000	0.29
T10	44.00-24.00	A	77.383	0.000	0.000	0.000	0.84
		B	73.033	0.000	0.000	0.000	0.37
		C	55.483	0.000	0.000	0.000	0.29
T11	24.00-4.00	A	65.776	0.000	0.000	0.000	0.71
		B	62.078	0.000	0.000	0.000	0.32
		C	47.161	0.000	0.000	0.000	0.25

Feed Line/Linear Appurtenances Section Areas - With Ice

Tower Section	Tower Elevation ft	Face or Leg	Ice Thickness in	A_R ft^2	A_F ft^2	C_AA_A In Face ft^2	C_AA_A Out Face ft^2	Weight K
T1	199.00-189.00	A	0.500	1.667	0.000	0.000	0.000	0.02
		B		0.000	0.000	0.000	0.000	0.00
		C		0.000	0.000	0.000	0.000	0.00
T2	189.00-174.00	A	0.500	4.258	0.000	0.000	0.000	0.02
		B		0.000	0.000	0.000	0.000	0.00
		C		1.758	0.000	0.000	0.000	0.03
T3	174.00-154.00	A	0.500	38.242	0.000	0.000	0.000	0.36
		B		17.325	0.000	0.000	0.000	0.00
		C		17.583	0.000	0.000	0.000	0.27
T4	154.00-144.00	A	0.500	30.678	1.240	0.000	0.000	0.55
		B		20.220	1.240	0.000	0.000	0.00
		C		8.792	0.000	0.000	0.000	0.14
T5	144.00-124.00	A	0.500	70.297	4.133	0.000	0.000	1.40
		B		58.320	20.667	0.000	0.000	0.76
		C		32.483	16.533	0.000	0.000	0.37
T6	124.00-104.00	A	0.500	93.992	4.617	0.000	0.000	1.48
		B		65.292	25.283	0.000	0.000	0.95
		C		55.167	20.667	0.000	0.000	0.70
T7	104.00-84.00	A	0.500	112.192	7.417	0.000	0.000	1.73

Tower Section	Tower Elevation ft	Face or Leg	Ice Thickness in	A_R ft^2	A_F ft^2	C_AA_A In Face ft^2	C_AA_A Out Face ft^2	Weight K
		B		77.267	26.733	0.000	0.000	0.95
		C		61.392	22.017	0.000	0.000	0.77
T8	84.00-64.00	A	0.500	114.693	7.867	0.000	0.000	1.73
		B		77.267	26.733	0.000	0.000	0.95
		C		63.893	22.467	0.000	0.000	0.80
T9	64.00-44.00	A	0.500	115.483	7.867	0.000	0.000	1.73
		B		77.267	26.733	0.000	0.000	0.95
		C		64.683	22.467	0.000	0.000	0.80
T10	44.00-24.00	A	0.500	115.483	7.867	0.000	0.000	1.73
		B		77.267	26.733	0.000	0.000	0.95
		C		64.683	22.467	0.000	0.000	0.80
T11	24.00-4.00	A	0.500	98.161	6.687	0.000	0.000	1.47
		B		65.677	22.723	0.000	0.000	0.81
		C		54.981	19.097	0.000	0.000	0.68

Feed Line Center of Pressure

Section	Elevation ft	CP_X in	CP_Z in	CP_X Ice in	CP_Z Ice in
T1	199.00-189.00	-1.1571	0.6309	-1.1502	0.6271
T2	189.00-174.00	-1.8049	1.0066	-1.7678	0.9852
T3	174.00-154.00	-2.9657	-1.9942	-3.2983	-1.2572
T4	154.00-144.00	-1.8080	-4.1094	-2.1772	-3.1719
T5	144.00-124.00	1.2216	-2.5201	0.0152	-2.0414
T6	124.00-104.00	0.0894	-1.6384	-1.4736	-1.0963
T7	104.00-84.00	-0.5774	-2.9563	-2.2507	-2.1514
T8	84.00-64.00	-0.8835	-3.2268	-2.8612	-2.2554
T9	64.00-44.00	-1.0676	-3.6249	-3.3660	-2.4928
T10	44.00-24.00	-1.1460	-3.8919	-3.6520	-2.7046
T11	24.00-4.00	-1.1580	-3.9330	-3.7080	-2.7461

Discrete Tower Loads

Description	Face or Leg	Offset Type	Offsets: Horz Lateral Vert ft ft ft	Azimuth Adjustment °	Placement ft		C_AA_A Front ft^2	C_AA_A Side ft^2	Weight K
4-ft Lightning Rod (MCM)	B	From Leg	0.00 0.00 3.00	0.0000	200.00	No Ice 1/2" Ice	0.40 0.81	0.40 0.81	0.01 0.01
Flash Beacon Lighting (MCM)	C	None		0.0000	200.00	No Ice 1/2" Ice	2.70 3.10	2.70 3.10	0.05 0.07
DB224 (Town - Existing)	C	From Leg	0.00 0.00 10.00	0.0000	199.00	No Ice 1/2" Ice	3.15 5.67	3.15 5.67	0.03 0.04
15' T-Frame (Town - Existing)	A	From Face	2.00 0.00 0.00	0.0000	176.00	No Ice 1/2" Ice	15.00 20.60	15.00 20.60	0.50 0.65

Description	Face or Leg	Offset Type	Offsets: Horz Lateral Vert ft ft ft	Azimuth Adjustment °	Placement ft		C_AA_A Front ft^2	C_AA_A Side ft^2	Weight K
15' T-Frame (Town - Existing)	B	From Face	2.00 0.00 0.00	0.0000	176.00	No Ice 1/2" Ice	15.00 20.60	15.00 20.60	0.50 0.65
15' T-Frame (Town - Existing)	C	From Face	2.00 0.00 0.00	0.0000	176.00	No Ice 1/2" Ice	15.00 20.60	15.00 20.60	0.50 0.65
DB224 (Town - Existing)	A	From Face	4.00 -6.00 10.00	0.0000	176.00	No Ice 1/2" Ice	3.15 5.67	3.15 5.67	0.03 0.04
20' x 2" Dia Omni (Town - Existing)	A	From Face	4.00 0.00 10.00	0.0000	176.00	No Ice 1/2" Ice	4.00 6.03	4.00 6.03	0.02 0.05
DB224 (Town - Existing)	A	From Face	4.00 6.00 10.00	0.0000	176.00	No Ice 1/2" Ice	3.15 5.67	3.15 5.67	0.03 0.04
10' x 3" Dia Omni (Town - Existing)	B	From Face	4.00 0.00 5.00	0.0000	176.00	No Ice 1/2" Ice	3.00 4.03	3.00 4.03	0.03 0.05
12' x 3" Dia Omni (Town - Existing)	B	From Face	4.00 6.00 6.00	0.0000	176.00	No Ice 1/2" Ice	3.60 4.83	3.60 4.83	0.04 0.06
DB224 (Town - Existing)	C	From Face	4.00 -6.00 10.00	0.0000	176.00	No Ice 1/2" Ice	3.15 5.67	3.15 5.67	0.03 0.04
20' x 2" Dia Omni (Town - Existing)	C	From Face	4.00 0.00 10.00	0.0000	176.00	No Ice 1/2" Ice	4.00 6.03	4.00 6.03	0.02 0.05
DB224 (Town - Existing)	C	From Face	4.00 6.00 10.00	0.0000	176.00	No Ice 1/2" Ice	3.15 5.67	3.15 5.67	0.03 0.04
15' T-Frame (AT&T - Existing)	A	From Face	2.00 0.00 0.00	0.0000	165.00	No Ice 1/2" Ice	15.00 20.60	15.00 20.60	0.50 0.65
15' T-Frame (AT&T - Existing)	B	From Face	2.00 0.00 0.00	0.0000	165.00	No Ice 1/2" Ice	15.00 20.60	15.00 20.60	0.50 0.65
15' T-Frame (AT&T - Existing)	C	From Face	2.00 0.00 0.00	0.0000	165.00	No Ice 1/2" Ice	15.00 20.60	15.00 20.60	0.50 0.65
800-10121 (AT&T - Existing)	A	From Face	4.00 -3.00 0.00	0.0000	165.00	No Ice 1/2" Ice	5.46 5.88	3.29 3.64	0.05 0.08
(2) LGP21401 TMA (AT&T - Existing)	A	From Face	4.00 -3.00 0.00	0.0000	165.00	No Ice 1/2" Ice	0.95 1.09	0.37 0.48	0.02 0.02
SBNH-1D6565C (AT&T - Existing)	A	From Face	4.00 1.00 0.00	0.0000	165.00	No Ice 1/2" Ice	11.41 12.03	7.70 8.29	0.06 0.13
(2) RRUS-11 (AT&T - Existing)	A	From Face	4.00 0.00 0.00	0.0000	165.00	No Ice 1/2" Ice	2.99 3.23	1.25 1.41	0.05 0.07
800-10121 (AT&T - Existing)	B	From Face	4.00 -3.00 0.00	0.0000	165.00	No Ice 1/2" Ice	5.46 5.88	3.29 3.64	0.05 0.08
(2) LGP21401 TMA (AT&T - Existing)	B	From Face	4.00 -3.00 0.00	0.0000	165.00	No Ice 1/2" Ice	0.95 1.09	0.37 0.48	0.02 0.02

Description	Face or Leg	Offset Type	Offsets: Horz Lateral Vert ft ft ft	Azimuth Adjustment °	Placement ft		C_AA_A Front ft^2	C_AA_A Side ft^2	Weight K
SBNH-1D6565C (AT&T - Existing)	B	From Face	4.00 1.00 0.00	0.0000	165.00	No Ice 1/2" Ice	11.41 12.03	7.70 8.29	0.06 0.13
(2) RRUS-11 (AT&T - Existing)	B	From Face	4.00 0.00 0.00	0.0000	165.00	No Ice 1/2" Ice	2.99 3.23	1.25 1.41	0.05 0.07
800-10121 (AT&T - Existing)	C	From Face	4.00 -3.00 0.00	0.0000	165.00	No Ice 1/2" Ice	5.46 5.88	3.29 3.64	0.05 0.08
(2) LGP21401 TMA (AT&T - Existing)	C	From Face	4.00 -3.00 0.00	0.0000	165.00	No Ice 1/2" Ice	0.95 1.09	0.37 0.48	0.02 0.02
SBNH-1D6565C (AT&T - Existing)	C	From Face	4.00 1.00 0.00	0.0000	165.00	No Ice 1/2" Ice	11.41 12.03	7.70 8.29	0.06 0.13
(2) RRUS-11 (AT&T - Existing)	C	From Face	4.00 0.00 0.00	0.0000	165.00	No Ice 1/2" Ice	2.99 3.23	1.25 1.41	0.05 0.07
DC6-48-60-18-8F Surge Arrestor (AT&T - Existing)	C	From Face	4.00 0.00 0.00	0.0000	165.00	No Ice 1/2" Ice	2.23 2.45	2.23 2.45	0.02 0.04
15' T-Frame (Verizon - Existing)	A	From Leg	2.00 0.00 0.00	0.0000	150.00	No Ice 1/2" Ice	15.00 20.60	15.00 20.60	0.50 0.65
15' T-Frame (Verizon - Existing)	B	From Leg	2.00 0.00 0.00	0.0000	150.00	No Ice 1/2" Ice	15.00 20.60	15.00 20.60	0.50 0.65
15' T-Frame (Verizon - Existing)	C	From Leg	2.00 0.00 0.00	0.0000	150.00	No Ice 1/2" Ice	15.00 20.60	15.00 20.60	0.50 0.65
SBNHH-1D65B (Verizon - Proposed)	A	From Leg	4.00 -4.00 0.00	0.0000	150.00	No Ice 1/2" Ice	8.33 8.88	5.34 5.79	0.04 0.09
LNX-6514DS-T4M (Verizon - Existing)	A	From Leg	4.00 0.00 0.00	0.0000	150.00	No Ice 1/2" Ice	8.41 8.96	5.41 5.86	0.04 0.09
SBNHH-1D65B (Verizon - Proposed)	A	From Leg	4.00 4.00 0.00	0.0000	150.00	No Ice 1/2" Ice	8.33 8.88	5.34 5.79	0.04 0.09
BXA-70063/6CF (Verizon - Existing)	A	From Leg	4.00 6.00 0.00	0.0000	150.00	No Ice 1/2" Ice	7.73 8.27	4.16 4.60	0.01 0.05
SBNHH-1D65B (Verizon - Proposed)	B	From Leg	4.00 -4.00 0.00	0.0000	150.00	No Ice 1/2" Ice	8.33 8.88	5.34 5.79	0.04 0.09
BXA-70063/6CF (Verizon - Existing)	B	From Leg	4.00 0.00 0.00	0.0000	150.00	No Ice 1/2" Ice	7.73 8.27	4.16 4.60	0.01 0.05
SBNHH-1D65B (Verizon - Proposed)	B	From Leg	4.00 4.00 0.00	0.0000	150.00	No Ice 1/2" Ice	8.33 8.88	5.34 5.79	0.04 0.09
BXA-70063/6CF (Verizon - Existing)	B	From Leg	4.00 6.00 0.00	0.0000	150.00	No Ice 1/2" Ice	7.73 8.27	4.16 4.60	0.01 0.05
SBNHH-1D65B (Verizon - Proposed)	C	From Leg	4.00 -4.00 0.00	0.0000	150.00	No Ice 1/2" Ice	8.33 8.88	5.34 5.79	0.04 0.09

Description	Face or Leg	Offset Type	Offsets: Horz Lateral Vert ft ft ft	Azimuth Adjustment °	Placement ft		C_AA_A Front ft^2	C_AA_A Side ft^2	Weight K
BXA-70063/6CF (Verizon - Existing)	C	From Leg	4.00 0.00 0.00	0.0000	150.00	No Ice 1/2" Ice	7.73 8.27	4.16 4.60	0.01 0.05
SBNHH-1D65B (Verizon - Proposed)	C	From Leg	4.00 4.00 0.00	0.0000	150.00	No Ice 1/2" Ice	8.33 8.88	5.34 5.79	0.04 0.09
BXA-70063/6CF (Verizon - Existing)	C	From Leg	4.00 6.00 0.00	0.0000	150.00	No Ice 1/2" Ice	7.73 8.27	4.16 4.60	0.01 0.05
(2) FD9R6004/2C-3L Diplexer (Verizon - Existing)	A	From Leg	4.00 0.00 0.00	0.0000	150.00	No Ice 1/2" Ice	0.37 0.45	0.08 0.14	0.00 0.01
(2) FD9R6004/2C-3L Diplexer (Verizon - Existing)	B	From Leg	4.00 0.00 0.00	0.0000	150.00	No Ice 1/2" Ice	0.37 0.45	0.08 0.14	0.00 0.01
(2) FD9R6004/2C-3L Diplexer (Verizon - Existing)	C	From Leg	4.00 0.00 0.00	0.0000	150.00	No Ice 1/2" Ice	0.37 0.45	0.08 0.14	0.00 0.01
RRH4x45/2x90-AWS (Verizon - Proposed)	A	From Leg	4.00 -4.00 0.00	0.0000	150.00	No Ice 1/2" Ice	3.01 3.26	1.91 2.13	0.08 0.10
RRH4x45/2x90-AWS (Verizon - Proposed)	B	From Leg	4.00 -4.00 0.00	0.0000	150.00	No Ice 1/2" Ice	3.01 3.26	1.91 2.13	0.08 0.10
RRH4x45/2x90-AWS (Verizon - Proposed)	C	From Leg	4.00 -4.00 0.00	0.0000	150.00	No Ice 1/2" Ice	3.01 3.26	1.91 2.13	0.08 0.10
RRH2x60-PCS (Verizon - Proposed)	A	From Leg	4.00 4.00 0.00	0.0000	150.00	No Ice 1/2" Ice	2.51 2.73	1.55 1.74	0.06 0.07
RRH2x60-PCS (Verizon - Proposed)	B	From Leg	4.00 4.00 0.00	0.0000	150.00	No Ice 1/2" Ice	2.51 2.73	1.55 1.74	0.06 0.07
RRH2x60-PCS (Verizon - Proposed)	C	From Leg	4.00 4.00 0.00	0.0000	150.00	No Ice 1/2" Ice	2.51 2.73	1.55 1.74	0.06 0.07
RRH2x60-07-U (Verizon - Proposed)	A	From Leg	4.00 0.00 0.00	0.0000	150.00	No Ice 1/2" Ice	2.45 2.67	1.63 1.83	0.05 0.07
RRH2x60-07-U (Verizon - Proposed)	B	From Leg	4.00 0.00 0.00	0.0000	150.00	No Ice 1/2" Ice	2.45 2.67	1.63 1.83	0.05 0.07
RRH2x60-07-U (Verizon - Proposed)	C	From Leg	4.00 0.00 0.00	0.0000	150.00	No Ice 1/2" Ice	2.45 2.67	1.63 1.83	0.05 0.07
DB-T1-6Z-8AB-0Z (Verizon - Proposed)	A	From Leg	4.00 0.00 0.00	0.0000	150.00	No Ice 1/2" Ice	5.60 5.92	2.33 2.56	0.04 0.08
DB-T1-6Z-8AB-0Z (Verizon - Existing)	B	From Leg	4.00 0.00 0.00	0.0000	150.00	No Ice 1/2" Ice	5.60 5.92	2.33 2.56	0.04 0.08
15' T-Frame (T-Mobile - Existing)	A	From Leg	2.00 0.00 0.00	0.0000	140.00	No Ice 1/2" Ice	15.00 20.60	15.00 20.60	0.50 0.65
15' T-Frame (T-Mobile - Existing)	B	From Leg	2.00 0.00 0.00	0.0000	140.00	No Ice 1/2" Ice	15.00 20.60	15.00 20.60	0.50 0.65

Description	Face or Leg	Offset Type	Offsets: Horz Lateral Vert ft ft ft	Azimuth Adjustment °	Placement ft		C_AA_A Front ft^2	C_AA_A Side ft^2	Weight K
15' T-Frame	C	From Leg	2.00	0.0000	140.00	No Ice	15.00	15.00	0.50
(T-Mobile - Existing)			0.00			1/2" Ice	20.60	20.60	0.65
			0.00						
RR90-17-02DP	A	From Leg	4.00	0.0000	140.00	No Ice	4.36	1.97	0.02
(T-Mobile - Existing)			4.00			1/2" Ice	4.77	2.31	0.04
			0.00						
RR90-17-02DP	B	From Leg	4.00	0.0000	140.00	No Ice	4.36	1.97	0.02
(T-Mobile - Existing)			4.00			1/2" Ice	4.77	2.31	0.04
			0.00						
RR90-17-02DP	C	From Leg	4.00	0.0000	140.00	No Ice	4.36	1.97	0.02
(T-Mobile - Existing)			4.00			1/2" Ice	4.77	2.31	0.04
			0.00						
(4) KRY 112 TMA	A	From Leg	4.00	0.0000	140.00	No Ice	0.78	0.49	0.03
(T-Mobile - Existing)			0.00			1/2" Ice	0.90	0.59	0.03
			0.00						
(4) KRY 112 TMA	B	From Leg	4.00	0.0000	140.00	No Ice	0.78	0.49	0.03
(T-Mobile - Existing)			0.00			1/2" Ice	0.90	0.59	0.03
			0.00						
(4) KRY 112 TMA	C	From Leg	4.00	0.0000	140.00	No Ice	0.78	0.49	0.03
(T-Mobile - Existing)			0.00			1/2" Ice	0.90	0.59	0.03
			0.00						
LNX-6515DS	A	From Leg	4.00	0.0000	140.00	No Ice	11.45	7.70	0.06
(T-Mobile - Existing)			-6.00			1/2" Ice	12.06	8.29	0.12
			0.00						
LNX-6515DS	B	From Leg	4.00	0.0000	140.00	No Ice	11.45	7.70	0.06
(T-Mobile - Existing)			-6.00			1/2" Ice	12.06	8.29	0.12
			0.00						
LNX-6515DS	C	From Leg	4.00	0.0000	140.00	No Ice	11.45	7.70	0.06
(T-Mobile - Existing)			-6.00			1/2" Ice	12.06	8.29	0.12
			0.00						
APX16DWV-16DWVS-E-A	A	From Leg	4.00	0.0000	140.00	No Ice	7.07	2.15	0.04
20			0.00			1/2" Ice	7.52	2.49	0.07
(T-Mobile - Existing)			0.00						
APX16DWV-16DWVS-E-A	B	From Leg	4.00	0.0000	140.00	No Ice	7.07	2.15	0.04
20			0.00			1/2" Ice	7.52	2.49	0.07
(T-Mobile - Existing)			0.00						
APX16DWV-16DWVS-E-A	C	From Leg	4.00	0.0000	140.00	No Ice	7.07	2.15	0.04
20			0.00			1/2" Ice	7.52	2.49	0.07
(T-Mobile - Existing)			0.00						
APXV18-206517-C	A	From Leg	0.50	0.0000	130.00	No Ice	5.51	3.93	0.02
(MetroPCS - Existing)			0.00			1/2" Ice	5.98	4.39	0.05
			0.00						
APXV18-206517-C	B	From Leg	0.50	0.0000	130.00	No Ice	5.51	3.93	0.02
(MetroPCS - Existing)			0.00			1/2" Ice	5.98	4.39	0.05
			0.00						
APXV18-206517-C	C	From Leg	0.50	0.0000	130.00	No Ice	5.51	3.93	0.02
(MetroPCS - Existing)			0.00			1/2" Ice	5.98	4.39	0.05
			0.00						
ROHN 6'x15' Boom Gate (1)	A	From Leg	2.00	0.0000	119.00	No Ice	17.75	17.75	0.60
(Sprint - Existing)			0.00			1/2" Ice	21.10	21.10	0.07
			0.00						
ROHN 6'x15' Boom Gate (1)	B	From Leg	2.00	0.0000	119.00	No Ice	17.75	17.75	0.60
(Sprint - Existing)			0.00			1/2" Ice	21.10	21.10	0.07
			0.00						
ROHN 6'x15' Boom Gate (1)	C	From Leg	2.00	0.0000	119.00	No Ice	17.75	17.75	0.60
(Sprint - Existing)			0.00			1/2" Ice	21.10	21.10	0.07
			0.00						

Description	Face or Leg	Offset Type	Offsets: Horz Lateral Vert ft ft ft	Azimuth Adjustment °	Placement ft		C_AA_A Front ft^2	C_AA_A Side ft^2	Weight K
APXVTM14 (Sprint - Existing)	A	From Leg	4.00 -4.00 0.00	0.0000	119.00	No Ice 1/2" Ice	6.90 7.35	3.61 3.97	0.06 0.10
APXVSPP18-C-A20 (Sprint - Existing)	A	From Leg	4.00 -2.00 0.00	0.0000	119.00	No Ice 1/2" Ice	8.26 8.81	5.28 5.74	0.06 0.11
APXVSPP18-C-A20 (Sprint - Existing)	A	From Leg	4.00 2.00 0.00	0.0000	119.00	No Ice 1/2" Ice	8.26 8.81	5.28 5.74	0.06 0.11
APXVTM14 (Sprint - Existing)	B	From Leg	4.00 -4.00 0.00	0.0000	119.00	No Ice 1/2" Ice	6.90 7.35	3.61 3.97	0.06 0.10
APXVSPP18-C-A20 (Sprint - Existing)	B	From Leg	4.00 -2.00 0.00	0.0000	119.00	No Ice 1/2" Ice	8.26 8.81	5.28 5.74	0.06 0.11
APXVSPP18-C-A20 (Sprint - Existing)	B	From Leg	4.00 2.00 0.00	0.0000	119.00	No Ice 1/2" Ice	8.26 8.81	5.28 5.74	0.06 0.11
APXVTM14 (Sprint - Existing)	C	From Leg	4.00 -4.00 0.00	0.0000	119.00	No Ice 1/2" Ice	6.90 7.35	3.61 3.97	0.06 0.10
APXVSPP18-C-A20 (Sprint - Existing)	C	From Leg	4.00 -2.00 0.00	0.0000	119.00	No Ice 1/2" Ice	8.26 8.81	5.28 5.74	0.06 0.11
APXVSPP18-C-A20 (Sprint - Existing)	C	From Leg	4.00 2.00 0.00	0.0000	119.00	No Ice 1/2" Ice	8.26 8.81	5.28 5.74	0.06 0.11
FD-RRH 2x50 800 (Sprint - Existing)	A	From Leg	3.00 -2.00 0.00	0.0000	119.00	No Ice 1/2" Ice	2.40 2.61	2.25 2.46	0.06 0.09
FD-RRH 2x50 800 (Sprint - Existing)	B	From Leg	3.00 -2.00 0.00	0.0000	119.00	No Ice 1/2" Ice	2.40 2.61	2.25 2.46	0.06 0.09
FD-RRH 2x50 800 (Sprint - Existing)	C	From Leg	3.00 -2.00 0.00	0.0000	119.00	No Ice 1/2" Ice	2.40 2.61	2.25 2.46	0.06 0.09
FD-RRH 4x45 1900 (Sprint - Existing)	A	From Leg	3.00 2.00 0.00	0.0000	119.00	No Ice 1/2" Ice	2.71 2.94	2.78 3.02	0.06 0.08
FD-RRH 4x45 1900 (Sprint - Existing)	B	From Leg	3.00 2.00 0.00	0.0000	119.00	No Ice 1/2" Ice	2.71 2.94	2.78 3.02	0.06 0.08
FD-RRH 4x45 1900 (Sprint - Existing)	C	From Leg	3.00 2.00 0.00	0.0000	119.00	No Ice 1/2" Ice	2.71 2.94	2.78 3.02	0.06 0.08
TD-RRH8x20-25 (Sprint - Existing)	A	From Leg	4.00 -3.00 0.00	0.0000	119.00	No Ice 1/2" Ice	4.72 5.01	1.70 1.92	0.07 0.10
TD-RRH8x20-25 (Sprint - Existing)	B	From Leg	4.00 -3.00 0.00	0.0000	119.00	No Ice 1/2" Ice	4.72 5.01	1.70 1.92	0.07 0.10
TD-RRH8x20-25 (Sprint - Existing)	C	From Leg	4.00 -3.00 0.00	0.0000	119.00	No Ice 1/2" Ice	4.72 5.01	1.70 1.92	0.07 0.10
4-ft Dual Mount Standoff (Clearwire - Existing)	A	From Leg	2.00 0.00 0.00	0.0000	109.00	No Ice 1/2" Ice	5.20 6.30	5.20 6.30	0.05 0.06

Description	Face or Leg	Offset Type	Offsets: Horz Lateral Vert ft ft ft	Azimuth Adjustment °	Placement ft		C_AA_A Front ft^2	C_AA_A Side ft^2	Weight K
4-ft Dual Mount Standoff	B	From Leg	2.00	0.0000	109.00	No Ice	5.20	5.20	0.05
(Clearwire - Existing)			0.00			1/2" Ice	6.30	6.30	0.06
			0.00						
4-ft Dual Mount Standoff	C	From Leg	2.00	0.0000	109.00	No Ice	5.20	5.20	0.05
(Clearwire - Existing)			0.00			1/2" Ice	6.30	6.30	0.06
			0.00						
LLPX310R	A	From Leg	4.00	0.0000	109.00	No Ice	4.83	1.95	0.03
(Clearwire - Existing)			0.00			1/2" Ice	5.18	2.21	0.05
			0.00						
LLPX310R	B	From Leg	4.00	0.0000	109.00	No Ice	4.83	1.95	0.03
(Clearwire - Existing)			0.00			1/2" Ice	5.18	2.21	0.05
			0.00						
LLPX310R	C	From Leg	4.00	0.0000	109.00	No Ice	4.83	1.95	0.03
(Clearwire - Existing)			0.00			1/2" Ice	5.18	2.21	0.05
			0.00						
RRU	A	From Leg	4.00	0.0000	109.00	No Ice	1.80	0.78	0.03
(Clearwire - Existing)			0.00			1/2" Ice	2.00	0.92	0.04
			0.00						
RRU	B	From Leg	4.00	0.0000	109.00	No Ice	1.80	0.78	0.03
(Clearwire - Existing)			0.00			1/2" Ice	2.00	0.92	0.04
			0.00						
RRU	C	From Leg	4.00	0.0000	109.00	No Ice	1.80	0.78	0.03
(Clearwire - Existing)			0.00			1/2" Ice	2.00	0.92	0.04
			0.00						
Beacon	A	From Leg	0.50	0.0000	99.00	No Ice	1.40	0.35	0.02
(MCM)			0.00			1/2" Ice	1.56	0.45	0.03
			0.00						
Beacon	B	From Leg	0.50	0.0000	99.00	No Ice	1.40	0.35	0.02
(MCM)			0.00			1/2" Ice	1.56	0.45	0.03
			0.00						
Beacon	C	From Leg	0.50	0.0000	99.00	No Ice	1.40	0.35	0.02
(MCM)			0.00			1/2" Ice	1.56	0.45	0.03
			0.00						
GPS	C	From Leg	1.00	0.0000	78.00	No Ice	1.00	1.00	0.01
(Sprint - Existing)			0.00			1/2" Ice	1.50	1.50	0.01
			0.00						
1' Standoff	C	From Leg	0.50	0.0000	78.00	No Ice	1.32	1.32	0.04
(Sprint - Existing)			0.00			1/2" Ice	1.58	1.58	0.06
			0.00						

Dishes

Description	Face or Leg	Dish Type	Offset Type	Offsets: Horz Lateral Vert ft	Azimuth Adjustment °	3 dB Beam Width °	Elevation ft	Outside Diameter ft		Aperture Area ft^2	Weight K
VHLP2-23	A	Paraboloid	From	4.00	0.0000		109.00	2.17	No Ice	3.72	0.03
(Clearwire - Existing)		w/Shroud (HP)	Leg	0.00					1/2" Ice	4.01	0.04
				0.00							
VHLP2-23	B	Paraboloid	From	4.00	0.0000		109.00	2.17	No Ice	3.72	0.03

Description	Face or Leg	Dish Type	Offset Type	Offsets: Horz Lateral Vert ft	Azimuth Adjustment °	3 dB Beam Width °	Elevation ft	Outside Diameter ft		Aperture Area ft^2	Weight K
(Clearwire - Existing)		w/Shroud (HP)	Leg	0.00 0.00					1/2" Ice	4.01	0.04
VHLP2-23 (Clearwire - Reserved)	C	Paraboloid w/Shroud (HP)	From Leg	4.00 0.00 0.00	0.0000		109.00	2.17	No Ice 1/2" Ice	3.72 4.01	0.03 0.04

Truss-Leg Properties

Section Designation	Area in^2	Area Ice in^2	Self Weight K	Ice Weight K	Equiv. Diameter in	Equiv. Diameter Ice in	Leg Area in^2
Pirod 105244	1026.8606	1727.9786	0.56	0.21	7.1310	11.9999	3.6816
Pirod 105217	2296.2363	3598.8066	0.59	0.43	7.9730	12.4959	5.3014
Pirod 105218	2425.3141	3778.2146	0.72	0.45	8.4212	13.1188	7.2158
Pirod 105218	2425.3141	3778.2146	0.72	0.45	8.4212	13.1188	7.2158
Pirod 105219	2597.9095	4038.9458	1.09	0.48	9.0205	14.0241	9.4248
Pirod 105219	2597.9095	4038.9458	1.09	0.48	9.0205	14.0241	9.4248
Pirod 105220	2735.0688	4240.4956	1.26	0.50	9.4968	14.7239	11.9282
Pirod 105220	2735.0688	4240.4956	1.26	0.50	9.4968	14.7239	11.9282

Tower Pressures - No Ice

$G_H = 1.116$

Section Elevation ft	z ft	K_Z	q_z psf	A_G ft^2	Face	A_F ft^2	A_R ft^2	A_{leg} ft^2	Leg % 	C_AA_A In Face ft^2	C_AA_A Out Face ft^2
T1 199.00-189.00	194.00	1.659	27	41.250	A	0.000	6.121	2.500	40.84	0.000	0.000
					B	0.000	5.288		47.28	0.000	0.000
					C	0.000	6.015		41.57	0.000	0.000
T2 189.00-174.00	181.50	1.628	27	61.875	A	0.000	9.855	3.750	38.05	0.000	0.000
					B	0.000	7.680		48.83	0.000	0.000
					C	0.000	9.816		38.20	0.000	0.000
T3 174.00-154.00	164.00	1.581	26	93.334	A	0.000	36.668	6.669	18.19	0.000	0.000
					B	0.000	25.752		25.90	0.000	0.000
					C	0.000	25.389		26.27	0.000	0.000
T4 154.00-144.00	149.00	1.538	25	66.055	A	4.253	32.073	11.905	32.77	0.000	0.000
					B	4.253	26.615		38.57	0.000	0.000
					C	4.253	16.530		57.28	0.000	0.000
T5 144.00-124.00	134.00	1.492	24	162.528	A	8.723	74.218	26.621	32.10	0.000	0.000
					B	8.723	82.441		29.20	0.000	0.000
					C	8.723	58.971		39.33	0.000	0.000
T6 124.00-104.00	114.00	1.425	23	202.945	A	11.964	91.068	28.118	27.29	0.000	0.000
					B	11.964	92.201		26.99	0.000	0.000
					C	11.964	78.118		31.21	0.000	0.000
T7 104.00-84.00	94.00	1.349	22	242.945	A	13.520	104.051	28.118	23.92	0.000	0.000
					B	13.520	101.151		24.52	0.000	0.000
					C	13.520	82.151		29.39	0.000	0.000
T8 84.00-64.00	74.00	1.26	21	283.362	A	15.144	107.212	30.118	24.62	0.000	0.000
					B	15.144	103.152		25.46	0.000	0.000

Section Elevation ft	z ft	K_Z	q_z psf	A_G ft²	Face	A_F ft²	A_R ft²	A_{leg} ft²	Leg %	C_AA_A In Face ft²	C_AA_A Out Face ft²
					C	15.144	85.312		29.98	0.000	0.000
T9 64.00-44.00	54.00	1.151	19	323.362	A	16.830	107.502	30.118	24.22	0.000	0.000
					B	16.830	103.152		25.10	0.000	0.000
					C	16.830	85.602		29.40	0.000	0.000
T10 44.00-24.00	34.00	1.009	17	363.780	A	21.661	109.092	31.709	24.25	0.000	0.000
					B	21.661	104.742		25.09	0.000	0.000
					C	21.661	87.192		29.13	0.000	0.000
T11 24.00-4.00	14.00	1	16	403.780	A	23.735	97.484	31.709	26.16	0.000	0.000
					B	23.735	93.787		26.98	0.000	0.000
					C	23.735	78.869		30.90	0.000	0.000

Tower Pressure - With Ice

$G_H = 1.116$

Section Elevation ft	z ft	K_Z	q_z psf	t_Z in	A_G ft²	Face	A_F ft²	A_R ft²	A_{leg} ft²	Leg %	C_AA_A In Face ft²	C_AA_A Out Face ft²
T1 199.00-189.00	194.00	1.659	20	0.5000	42.083	A	0.000	12.231	4.167	34.07	0.000	0.000
						B	0.000	10.565		39.44	0.000	0.000
						C	0.000	12.260		33.99	0.000	0.000
T2 189.00-174.00	181.50	1.628	20	0.5000	63.125	A	0.000	19.570	6.250	31.94	0.000	0.000
						B	0.000	15.312		40.82	0.000	0.000
						C	0.000	19.895		31.41	0.000	0.000
T3 174.00-154.00	164.00	1.581	19	0.5000	95.002	A	0.000	62.760	10.004	15.94	0.000	0.000
						B	0.000	41.844		23.91	0.000	0.000
						C	0.000	46.842		21.36	0.000	0.000
T4 154.00-144.00	149.00	1.538	19	0.5000	66.890	A	5.493	52.413	20.033	34.60	0.000	0.000
						B	5.493	41.954		42.22	0.000	0.000
						C	4.253	30.526		57.60	0.000	0.000
T5 144.00-124.00	134.00	1.492	18	0.5000	164.197	A	12.856	115.508	41.722	32.50	0.000	0.000
						B	29.389	103.531		31.39	0.000	0.000
						C	25.256	77.695		40.53	0.000	0.000
T6 124.00-104.00	114.00	1.425	18	0.5000	204.614	A	16.581	141.782	43.802	27.66	0.000	0.000
						B	37.248	113.082		29.14	0.000	0.000
						C	32.631	102.957		32.31	0.000	0.000
T7 104.00-84.00	94.00	1.349	17	0.5000	244.614	A	20.936	160.500	43.802	24.14	0.000	0.000
						B	40.253	125.575		26.41	0.000	0.000
						C	35.536	109.700		30.16	0.000	0.000
T8 84.00-64.00	74.00	1.26	15	0.5000	285.031	A	23.011	166.566	46.825	24.70	0.000	0.000
						B	41.877	129.140		27.38	0.000	0.000
						C	37.611	115.766		30.53	0.000	0.000
T9 64.00-44.00	54.00	1.151	14	0.5000	325.031	A	24.697	167.918	46.825	24.31	0.000	0.000
						B	43.563	129.702		27.03	0.000	0.000
						C	39.297	117.118		29.94	0.000	0.000
T10 44.00-24.00	34.00	1.009	12	0.5000	365.448	A	29.527	170.834	49.162	24.54	0.000	0.000
						B	48.394	132.617		27.16	0.000	0.000
						C	44.127	120.034		29.95	0.000	0.000
T11 24.00-4.00	14.00	1	12	0.5000	405.448	A	30.421	154.104	49.162	26.64	0.000	0.000
						B	46.458	121.619		29.25	0.000	0.000
						C	42.831	110.924		31.97	0.000	0.000

Tower Pressure - Service

$G_H = 1.116$

Section Elevation ft	z ft	K_Z	q_z psf	A_G ft²	Face	A_F ft²	A_R ft²	A_{leg} ft²	Leg %	C_AA_A In Face ft²	C_AA_A Out Face ft²
T1	194.00	1.659	11	41.250	A	0.000	6.121	2.500	40.84	0.000	0.000
199.00-189.00					B	0.000	5.288		47.28	0.000	0.000
					C	0.000	6.015		41.57	0.000	0.000
T2	181.50	1.628	10	61.875	A	0.000	9.855	3.750	38.05	0.000	0.000
189.00-174.00					B	0.000	7.680		48.83	0.000	0.000
					C	0.000	9.816		38.20	0.000	0.000
T3	164.00	1.581	10	93.334	A	0.000	36.668	6.669	18.19	0.000	0.000
174.00-154.00					B	0.000	25.752		25.90	0.000	0.000
					C	0.000	25.389		26.27	0.000	0.000
T4	149.00	1.538	10	66.055	A	4.253	32.073	11.905	32.77	0.000	0.000
154.00-144.00					B	4.253	26.615		38.57	0.000	0.000
					C	4.253	16.530		57.28	0.000	0.000
T5	134.00	1.492	10	162.528	A	8.723	74.218	26.621	32.10	0.000	0.000
144.00-124.00					B	8.723	82.441		29.20	0.000	0.000
					C	8.723	58.971		39.33	0.000	0.000
T6	114.00	1.425	9	202.945	A	11.964	91.068	28.118	27.29	0.000	0.000
124.00-104.00					B	11.964	92.201		26.99	0.000	0.000
					C	11.964	78.118		31.21	0.000	0.000
T7	94.00	1.349	9	242.945	A	13.520	104.051	28.118	23.92	0.000	0.000
104.00-84.00					B	13.520	101.151		24.52	0.000	0.000
					C	13.520	82.151		29.39	0.000	0.000
T8 84.00-64.00	74.00	1.26	8	283.362	A	15.144	107.212	30.118	24.62	0.000	0.000
					B	15.144	103.152		25.46	0.000	0.000
					C	15.144	85.312		29.98	0.000	0.000
T9 64.00-44.00	54.00	1.151	7	323.362	A	16.830	107.502	30.118	24.22	0.000	0.000
					B	16.830	103.152		25.10	0.000	0.000
					C	16.830	85.602		29.40	0.000	0.000
T10	34.00	1.009	6	363.780	A	21.661	109.092	31.709	24.25	0.000	0.000
44.00-24.00					B	21.661	104.742		25.09	0.000	0.000
					C	21.661	87.192		29.13	0.000	0.000
T11 24.00-4.00	14.00	1	6	403.780	A	23.735	97.484	31.709	26.16	0.000	0.000
					B	23.735	93.787		26.98	0.000	0.000
					C	23.735	78.869		30.90	0.000	0.000

Tower Forces - No Ice - Wind Normal To Face

Section Elevation ft	Add Weight K	Self Weight K	Face	e	C_F	R_R	D_F	D_R	A_E ft²	F K	w plf	Ctrl. Face
T1	0.01	0.42	A	0.148	2.777	0.581	1	1	3.558	0.30	29.96	A
199.00-189.00			B	0.128	2.853	0.578	1	1	3.059			
			C	0.146	2.787	0.581	1	1	3.494			
T2	0.02	0.61	A	0.159	2.738	0.583	1	1	5.745	0.47	31.19	A
189.00-174.00			B	0.124	2.869	0.578	1	1	4.438			
			C	0.159	2.74	0.583	1	1	5.721			
T3	0.27	1.46	A	0.393	2.078	0.649	1	1	23.787	1.43	71.43	A
174.00-154.00			B	0.276	2.362	0.609	1	1	15.678			
			C	0.272	2.373	0.608	1	1	15.430			
T4	0.30	1.07	A	0.55	1.844	0.724	1	1	27.482	1.42	142.44	A
154.00-144.00			B	0.467	1.946	0.681	1	1	22.387			

Section Elevation ft	Add Weight K	Self Weight K	Face	e	C_F	R_R	D_F	D_R	A_E ft^2	F K	w plf	Ctrl. Face
			C	0.315	2.258	0.62	1	1	14.509			
T5	1.06	2.24	A	0.51	1.887	0.703	1	1	60.884	3.45	172.38	B
144.00-124.00			B	0.561	1.833	0.73	1	1	68.942			
			C	0.417	2.032	0.658	1	1	47.553			
T6	1.32	2.80	A	0.508	1.89	0.701	1	1	75.843	3.77	188.62	B
124.00-104.00			B	0.513	1.883	0.704	1	1	76.907			
			C	0.444	1.984	0.67	1	1	64.341			
T7	1.50	2.87	A	0.484	1.922	0.689	1	1	85.257	4.04	201.92	A
104.00-84.00			B	0.472	1.939	0.684	1	1	82.669			
			C	0.394	2.076	0.649	1	1	66.843			
T8	1.50	4.51	A	0.432	2.004	0.665	1	1	86.450	3.99	199.45	A
84.00-64.00			B	0.417	2.03	0.659	1	1	83.109			
			C	0.355	2.161	0.634	1	1	69.240			
T9	1.51	4.64	A	0.384	2.096	0.645	1	1	86.211	3.80	190.03	A
64.00-44.00			B	0.371	2.124	0.64	1	1	82.869			
			C	0.317	2.252	0.621	1	1	70.004			
T10	1.51	5.56	A	0.359	2.15	0.636	1	1	91.031	3.61	180.38	A
44.00-24.00			B	0.347	2.177	0.632	1	1	87.813			
			C	0.299	2.298	0.616	1	1	75.342			
T11	1.28	5.72	A	0.3	2.295	0.616	1	1	83.781	3.51	175.74	A
24.00-4.00			B	0.291	2.32	0.613	1	1	81.245			
			C	0.254	2.425	0.603	1	1	71.287			
Sum Weight:	10.26	31.89						OTM	2414.33 kip-ft	29.79		

Tower Forces - No Ice - Wind 60 To Face

Section Elevation ft	Add Weight K	Self Weight K	Face	e	C_F	R_R	D_F	D_R	A_E ft^2	F K	w plf	Ctrl. Face
T1	0.01	0.42	A	0.148	2.777	0.581	0.8	1	3.558	0.30	29.96	A
199.00-189.00			B	0.128	2.853	0.578	0.8	1	3.059			
			C	0.146	2.787	0.581	0.8	1	3.494			
T2	0.02	0.61	A	0.159	2.738	0.583	0.8	1	5.745	0.47	31.19	A
189.00-174.00			B	0.124	2.869	0.578	0.8	1	4.438			
			C	0.159	2.74	0.583	0.8	1	5.721			
T3	0.27	1.46	A	0.393	2.078	0.649	0.8	1	23.787	1.43	71.43	A
174.00-154.00			B	0.276	2.362	0.609	0.8	1	15.678			
			C	0.272	2.373	0.608	0.8	1	15.430			
T4	0.30	1.07	A	0.55	1.844	0.724	0.8	1	26.631	1.38	138.04	A
154.00-144.00			B	0.467	1.946	0.681	0.8	1	21.537			
			C	0.315	2.258	0.62	0.8	1	13.659			
T5	1.06	2.24	A	0.51	1.887	0.703	0.8	1	59.139	3.36	168.02	B
144.00-124.00			B	0.561	1.833	0.73	0.8	1	67.198			
			C	0.417	2.032	0.658	0.8	1	45.809			
T6	1.32	2.80	A	0.508	1.89	0.701	0.8	1	73.451	3.66	182.75	B
124.00-104.00			B	0.513	1.883	0.704	0.8	1	74.514			
			C	0.444	1.984	0.67	0.8	1	61.948			
T7	1.50	2.87	A	0.484	1.922	0.689	0.8	1	82.553	3.91	195.52	A
104.00-84.00			B	0.472	1.939	0.684	0.8	1	79.965			
			C	0.394	2.076	0.649	0.8	1	64.139			
T8	1.50	4.51	A	0.432	2.004	0.665	0.8	1	83.421	3.85	192.46	A
84.00-64.00			B	0.417	2.03	0.659	0.8	1	80.080			
			C	0.355	2.161	0.634	0.8	1	66.211			
T9	1.51	4.64	A	0.384	2.096	0.645	0.8	1	82.845	3.65	182.61	A

Section Elevation ft	Add Weight K	Self Weight K	Face	e	C_F	R_R	D_F	D_R	A_E ft^2	F K	w plf	Ctrl. Face
64.00-44.00			B	0.371	2.124	0.64	0.8	1	79.503			
			C	0.317	2.252	0.621	0.8	1	66.638			
T10	1.51	5.56	A	0.359	2.15	0.636	0.8	1	86.699	3.44	171.79	A
44.00-24.00			B	0.347	2.177	0.632	0.8	1	83.481			
			C	0.299	2.298	0.616	0.8	1	71.009			
T11	1.28	5.72	A	0.3	2.295	0.616	0.8	1	79.035	3.32	165.79	A
24.00-4.00			B	0.291	2.32	0.613	0.8	1	76.498			
			C	0.254	2.425	0.603	0.8	1	66.540			
Sum Weight:	10.26	31.89						OTM	2347.82 kip-ft	28.76		

Tower Forces - No Ice - Wind 90 To Face

Section Elevation ft	Add Weight K	Self Weight K	Face	e	C_F	R_R	D_F	D_R	A_E ft^2	F K	w plf	Ctrl. Face
T1	0.01	0.42	A	0.148	2.777	0.581	0.85	1	3.558	0.30	29.96	A
199.00-189.00			B	0.128	2.853	0.578	0.85	1	3.059			
			C	0.146	2.787	0.581	0.85	1	3.494			
T2	0.02	0.61	A	0.159	2.738	0.583	0.85	1	5.745	0.47	31.19	A
189.00-174.00			B	0.124	2.869	0.578	0.85	1	4.438			
			C	0.159	2.74	0.583	0.85	1	5.721			
T3	0.27	1.46	A	0.393	2.078	0.649	0.85	1	23.787	1.43	71.43	A
174.00-154.00			B	0.276	2.362	0.609	0.85	1	15.678			
			C	0.272	2.373	0.608	0.85	1	15.430			
T4	0.30	1.07	A	0.55	1.844	0.724	0.85	1	26.844	1.39	139.14	A
154.00-144.00			B	0.467	1.946	0.681	0.85	1	21.750			
			C	0.315	2.258	0.62	0.85	1	13.872			
T5	1.06	2.24	A	0.51	1.887	0.703	0.85	1	59.575	3.38	169.11	B
144.00-124.00			B	0.561	1.833	0.73	0.85	1	67.634			
			C	0.417	2.032	0.658	0.85	1	46.245			
T6	1.32	2.80	A	0.508	1.89	0.701	0.85	1	74.049	3.68	184.22	B
124.00-104.00			B	0.513	1.883	0.704	0.85	1	75.112			
			C	0.444	1.984	0.67	0.85	1	62.546			
T7	1.50	2.87	A	0.484	1.922	0.689	0.85	1	83.229	3.94	197.12	A
104.00-84.00			B	0.472	1.939	0.684	0.85	1	80.641			
			C	0.394	2.076	0.649	0.85	1	64.815			
T8	1.50	4.51	A	0.432	2.004	0.665	0.85	1	84.178	3.88	194.21	A
84.00-64.00			B	0.417	2.03	0.659	0.85	1	80.838			
			C	0.355	2.161	0.634	0.85	1	66.968			
T9	1.51	4.64	A	0.384	2.096	0.645	0.85	1	83.687	3.69	184.47	A
64.00-44.00			B	0.371	2.124	0.64	0.85	1	80.345			
			C	0.317	2.252	0.621	0.85	1	67.479			
T10	1.51	5.56	A	0.359	2.15	0.636	0.85	1	87.782	3.48	173.94	A
44.00-24.00			B	0.347	2.177	0.632	0.85	1	84.564			
			C	0.299	2.298	0.616	0.85	1	72.093			
T11	1.28	5.72	A	0.3	2.295	0.616	0.85	1	80.221	3.37	168.28	A
24.00-4.00			B	0.291	2.32	0.613	0.85	1	77.685			
			C	0.254	2.425	0.603	0.85	1	67.727			
Sum Weight:	10.26	31.89						OTM	2364.44 kip-ft	29.01		

Tower Forces - With Ice - Wind Normal To Face

Section Elevation ft	Add Weight K	Self Weight K	Face	e	C_F	R_R	D_F	D_R	A_E ft²	F K	w plf	Ctrl. Face
T1	0.02	0.57	A	0.291	2.321	0.613	1	1	7.499	0.40	39.65	C
199.00-189.00			B	0.251	2.434	0.602	1	1	6.361			
			C	0.291	2.319	0.613	1	1	7.519			
T2	0.05	0.83	A	0.31	2.27	0.619	1	1	12.114	0.62	41.44	C
189.00-174.00			B	0.243	2.46	0.6	1	1	9.187			
			C	0.315	2.256	0.621	1	1	12.348			
T3	0.64	1.83	A	0.661	1.779	0.793	1	1	49.743	1.92	95.89	A
174.00-154.00			B	0.44	1.989	0.669	1	1	27.991			
			C	0.493	1.909	0.694	1	1	32.508			
T4	0.69	1.54	A	0.866	1.879	0.952	1	1	55.400	2.20	219.54	A
154.00-144.00			B	0.709	1.777	0.827	1	1	40.173			
			C	0.52	1.875	0.708	1	1	25.862			
T5	2.53	3.88	A	0.782	1.804	0.882	1	1	114.698	4.59	229.40	B
144.00-124.00			B	0.81	1.823	0.904	1	1	123.004			
			C	0.627	1.79	0.77	1	1	85.119			
T6	3.13	4.59	A	0.774	1.799	0.875	1	1	140.711	4.94	247.24	A
124.00-104.00			B	0.735	1.782	0.845	1	1	132.835			
			C	0.663	1.779	0.794	1	1	114.373			
T7	3.45	4.70	A	0.742	1.784	0.851	1	1	157.455	5.19	259.70	A
104.00-84.00			B	0.678	1.776	0.804	1	1	141.264			
			C	0.594	1.808	0.75	1	1	117.789			
T8	3.47	6.50	A	0.665	1.778	0.796	1	1	155.533	4.77	238.72	A
84.00-64.00			B	0.6	1.804	0.754	1	1	139.197			
			C	0.538	1.855	0.718	1	1	120.693			
T9	3.48	6.68	A	0.593	1.809	0.749	1	1	150.484	4.29	214.74	A
64.00-44.00			B	0.533	1.861	0.715	1	1	136.290			
			C	0.481	1.926	0.688	1	1	119.886			
T10	3.48	7.80	A	0.548	1.845	0.723	1	1	153.092	3.91	195.26	A
44.00-24.00			B	0.495	1.906	0.695	1	1	140.579			
			C	0.449	1.975	0.673	1	1	124.899			
T11	2.96	8.02	A	0.455	1.965	0.676	1	1	134.539	3.62	181.21	A
24.00-4.00			B	0.415	2.036	0.658	1	1	126.440			
			C	0.379	2.107	0.643	1	1	114.193			
Sum Weight:	23.90	46.95						OTM	3121.03 kip-ft	36.46		

Tower Forces - With Ice - Wind 60 To Face

Section Elevation ft	Add Weight K	Self Weight K	Face	e	C_F	R_R	D_F	D_R	A_E ft²	F K	w plf	Ctrl. Face
T1	0.02	0.57	A	0.291	2.321	0.613	0.8	1	7.499	0.40	39.65	C
199.00-189.00			B	0.251	2.434	0.602	0.8	1	6.361			
			C	0.291	2.319	0.613	0.8	1	7.519			
T2	0.05	0.83	A	0.31	2.27	0.619	0.8	1	12.114	0.62	41.44	C
189.00-174.00			B	0.243	2.46	0.6	0.8	1	9.187			
			C	0.315	2.256	0.621	0.8	1	12.348			
T3	0.64	1.83	A	0.661	1.779	0.793	0.8	1	49.743	1.92	95.89	A
174.00-154.00			B	0.44	1.989	0.669	0.8	1	27.991			
			C	0.493	1.909	0.694	0.8	1	32.508			
T4	0.69	1.54	A	0.866	1.879	0.952	0.8	1	54.302	2.15	215.18	A
154.00-144.00			B	0.709	1.777	0.827	0.8	1	39.074			

Section Elevation ft	Add Weight K	Self Weight K	Face	e	C_F	R_R	D_F	D_R	A_E ft^2	F K	w plf	Ctrl. Face
			C	0.52	1.875	0.708	0.8	1	25.011			
T5	2.53	3.88	A	0.782	1.804	0.882	0.8	1	112.127	4.37	218.44	B
144.00-124.00			B	0.81	1.823	0.904	0.8	1	117.126			
			C	0.627	1.79	0.77	0.8	1	80.068			
T6	3.13	4.59	A	0.774	1.799	0.875	0.8	1	137.394	4.83	241.41	A
124.00-104.00			B	0.735	1.782	0.845	0.8	1	125.385			
			C	0.663	1.779	0.794	0.8	1	107.847			
T7	3.45	4.70	A	0.742	1.784	0.851	0.8	1	153.268	5.06	252.79	A
104.00-84.00			B	0.678	1.776	0.804	0.8	1	133.213			
			C	0.594	1.808	0.75	0.8	1	110.681			
T8	3.47	6.50	A	0.665	1.778	0.796	0.8	1	150.930	4.63	231.66	A
84.00-64.00			B	0.6	1.804	0.754	0.8	1	130.821			
			C	0.538	1.855	0.718	0.8	1	113.171			
T9	3.48	6.68	A	0.593	1.809	0.749	0.8	1	145.545	4.15	207.69	A
64.00-44.00			B	0.533	1.861	0.715	0.8	1	127.577			
			C	0.481	1.926	0.688	0.8	1	112.027			
T10	3.48	7.80	A	0.548	1.845	0.723	0.8	1	147.186	3.75	187.73	A
44.00-24.00			B	0.495	1.906	0.695	0.8	1	130.900			
			C	0.449	1.975	0.673	0.8	1	116.074			
T11	2.96	8.02	A	0.455	1.965	0.676	0.8	1	128.455	3.46	173.02	A
24.00-4.00			B	0.415	2.036	0.658	0.8	1	117.148			
			C	0.379	2.107	0.643	0.8	1	105.627			
Sum Weight:	23.90	46.95						OTM	3037.87 kip-ft	35.34		

Tower Forces - With Ice - Wind 90 To Face

Section Elevation ft	Add Weight K	Self Weight K	Face	e	C_F	R_R	D_F	D_R	A_E ft^2	F K	w plf	Ctrl. Face
T1	0.02	0.57	A	0.291	2.321	0.613	0.85	1	7.499	0.40	39.65	C
199.00-189.00			B	0.251	2.434	0.602	0.85	1	6.361			
			C	0.291	2.319	0.613	0.85	1	7.519			
T2	0.05	0.83	A	0.31	2.27	0.619	0.85	1	12.114	0.62	41.44	C
189.00-174.00			B	0.243	2.46	0.6	0.85	1	9.187			
			C	0.315	2.256	0.621	0.85	1	12.348			
T3	0.64	1.83	A	0.661	1.779	0.793	0.85	1	49.743	1.92	95.89	A
174.00-154.00			B	0.44	1.989	0.669	0.85	1	27.991			
			C	0.493	1.909	0.694	0.85	1	32.508			
T4	0.69	1.54	A	0.866	1.879	0.952	0.85	1	54.576	2.16	216.27	A
154.00-144.00			B	0.709	1.777	0.827	0.85	1	39.349			
			C	0.52	1.875	0.708	0.85	1	25.224			
T5	2.53	3.88	A	0.782	1.804	0.882	0.85	1	112.770	4.42	221.18	B
144.00-124.00			B	0.81	1.823	0.904	0.85	1	118.595			
			C	0.627	1.79	0.77	0.85	1	81.331			
T6	3.13	4.59	A	0.774	1.799	0.875	0.85	1	138.223	4.86	242.87	A
124.00-104.00			B	0.735	1.782	0.845	0.85	1	127.247			
			C	0.663	1.779	0.794	0.85	1	109.478			
T7	3.45	4.70	A	0.742	1.784	0.851	0.85	1	154.315	5.09	254.52	A
104.00-84.00			B	0.678	1.776	0.804	0.85	1	135.226			
			C	0.594	1.808	0.75	0.85	1	112.458			
T8	3.47	6.50	A	0.665	1.778	0.796	0.85	1	152.081	4.67	233.43	A
84.00-64.00			B	0.6	1.804	0.754	0.85	1	132.915			
			C	0.538	1.855	0.718	0.85	1	115.052			
T9	3.48	6.68	A	0.593	1.809	0.749	0.85	1	146.780	4.19	209.45	A

Section Elevation ft	Add Weight K	Self Weight K	Face	e	C_F	R_R	D_F	D_R	A_E ft^2	F K	w plf	Ctrl. Face
64.00-44.00			B	0.533	1.861	0.715	0.85	1	129.755			
			C	0.481	1.926	0.688	0.85	1	113.992			
T10	3.48	7.80	A	0.548	1.845	0.723	0.85	1	148.662	3.79	189.61	A
44.00-24.00			B	0.495	1.906	0.695	0.85	1	133.320			
			C	0.449	1.975	0.673	0.85	1	118.280			
T11	2.96	8.02	A	0.455	1.965	0.676	0.85	1	129.976	3.50	175.06	A
24.00-4.00			B	0.415	2.036	0.658	0.85	1	119.471			
			C	0.379	2.107	0.643	0.85	1	107.768			
Sum Weight:	23.90	46.95						OTM	3058.66 kip-ft	35.62		

Tower Forces - Service - Wind Normal To Face

Section Elevation ft	Add Weight K	Self Weight K	Face	e	C_F	R_R	D_F	D_R	A_E ft^2	F K	w plf	Ctrl. Face
T1	0.01	0.42	A	0.148	2.777	0.581	1	1	3.558	0.12	11.70	A
199.00-189.00			B	0.128	2.853	0.578	1	1	3.059			
			C	0.146	2.787	0.581	1	1	3.494			
T2	0.02	0.61	A	0.159	2.738	0.583	1	1	5.745	0.18	12.18	A
189.00-174.00			B	0.124	2.869	0.578	1	1	4.438			
			C	0.159	2.74	0.583	1	1	5.721			
T3	0.27	1.46	A	0.393	2.078	0.649	1	1	23.787	0.56	27.90	A
174.00-154.00			B	0.276	2.362	0.609	1	1	15.678			
			C	0.272	2.373	0.608	1	1	15.430			
T4	0.30	1.07	A	0.55	1.844	0.724	1	1	27.482	0.56	55.64	A
154.00-144.00			B	0.467	1.946	0.681	1	1	22.387			
			C	0.315	2.258	0.62	1	1	14.509			
T5	1.06	2.24	A	0.51	1.887	0.703	1	1	60.884	1.35	67.34	B
144.00-124.00			B	0.561	1.833	0.73	1	1	68.942			
			C	0.417	2.032	0.658	1	1	47.553			
T6	1.32	2.80	A	0.508	1.89	0.701	1	1	75.843	1.47	73.68	B
124.00-104.00			B	0.513	1.883	0.704	1	1	76.907			
			C	0.444	1.984	0.67	1	1	64.341			
T7	1.50	2.87	A	0.484	1.922	0.689	1	1	85.257	1.58	78.88	A
104.00-84.00			B	0.472	1.939	0.684	1	1	82.669			
			C	0.394	2.076	0.649	1	1	66.843			
T8	1.50	4.51	A	0.432	2.004	0.665	1	1	86.450	1.56	77.91	A
84.00-64.00			B	0.417	2.03	0.659	1	1	83.109			
			C	0.355	2.161	0.634	1	1	69.240			
T9	1.51	4.64	A	0.384	2.096	0.645	1	1	86.211	1.48	74.23	A
64.00-44.00			B	0.371	2.124	0.64	1	1	82.869			
			C	0.317	2.252	0.621	1	1	70.004			
T10	1.51	5.56	A	0.359	2.15	0.636	1	1	91.031	1.41	70.46	A
44.00-24.00			B	0.347	2.177	0.632	1	1	87.813			
			C	0.299	2.298	0.616	1	1	75.342			
T11	1.28	5.72	A	0.3	2.295	0.616	1	1	83.781	1.37	68.65	A
24.00-4.00			B	0.291	2.32	0.613	1	1	81.245			
			C	0.254	2.425	0.603	1	1	71.287			
Sum Weight:	10.26	31.89						OTM	943.10 kip-ft	11.64		

Tower Forces - Service - Wind 60 To Face

Section Elevation ft	Add Weight K	Self Weight K	Face	e	C_F	R_R	D_F	D_R	A_E ft^2	F K	w plf	Ctrl. Face
T1	0.01	0.42	A	0.148	2.777	0.581	0.8	1	3.558	0.12	11.70	A
199.00-189.00			B	0.128	2.853	0.578	0.8	1	3.059			
			C	0.146	2.787	0.581	0.8	1	3.494			
T2	0.02	0.61	A	0.159	2.738	0.583	0.8	1	5.745	0.18	12.18	A
189.00-174.00			B	0.124	2.869	0.578	0.8	1	4.438			
			C	0.159	2.74	0.583	0.8	1	5.721			
T3	0.27	1.46	A	0.393	2.078	0.649	0.8	1	23.787	0.56	27.90	A
174.00-154.00			B	0.276	2.362	0.609	0.8	1	15.678			
			C	0.272	2.373	0.608	0.8	1	15.430			
T4	0.30	1.07	A	0.55	1.844	0.724	0.8	1	26.631	0.54	53.92	A
154.00-144.00			B	0.467	1.946	0.681	0.8	1	21.537			
			C	0.315	2.258	0.62	0.8	1	13.659			
T5	1.06	2.24	A	0.51	1.887	0.703	0.8	1	59.139	1.31	65.63	B
144.00-124.00			B	0.561	1.833	0.73	0.8	1	67.198			
			C	0.417	2.032	0.658	0.8	1	45.809			
T6	1.32	2.80	A	0.508	1.89	0.701	0.8	1	73.451	1.43	71.39	B
124.00-104.00			B	0.513	1.883	0.704	0.8	1	74.514			
			C	0.444	1.984	0.67	0.8	1	61.948			
T7	1.50	2.87	A	0.484	1.922	0.689	0.8	1	82.553	1.53	76.37	A
104.00-84.00			B	0.472	1.939	0.684	0.8	1	79.965			
			C	0.394	2.076	0.649	0.8	1	64.139			
T8	1.50	4.51	A	0.432	2.004	0.665	0.8	1	83.421	1.50	75.18	A
84.00-64.00			B	0.417	2.03	0.659	0.8	1	80.080			
			C	0.355	2.161	0.634	0.8	1	66.211			
T9	1.51	4.64	A	0.384	2.096	0.645	0.8	1	82.845	1.43	71.33	A
64.00-44.00			B	0.371	2.124	0.64	0.8	1	79.503			
			C	0.317	2.252	0.621	0.8	1	66.638			
T10	1.51	5.56	A	0.359	2.15	0.636	0.8	1	86.699	1.34	67.11	A
44.00-24.00			B	0.347	2.177	0.632	0.8	1	83.481			
			C	0.299	2.298	0.616	0.8	1	71.009			
T11	1.28	5.72	A	0.3	2.295	0.616	0.8	1	79.035	1.30	64.76	A
24.00-4.00			B	0.291	2.32	0.613	0.8	1	76.498			
			C	0.254	2.425	0.603	0.8	1	66.540			
Sum Weight:	10.26	31.89						OTM	917.12 kip-ft	11.23		

Tower Forces - Service - Wind 90 To Face

Section Elevation ft	Add Weight K	Self Weight K	Face	e	C_F	R_R	D_F	D_R	A_E ft^2	F K	w plf	Ctrl. Face
T1	0.01	0.42	A	0.148	2.777	0.581	0.85	1	3.558	0.12	11.70	A
199.00-189.00			B	0.128	2.853	0.578	0.85	1	3.059			
			C	0.146	2.787	0.581	0.85	1	3.494			
T2	0.02	0.61	A	0.159	2.738	0.583	0.85	1	5.745	0.18	12.18	A
189.00-174.00			B	0.124	2.869	0.578	0.85	1	4.438			
			C	0.159	2.74	0.583	0.85	1	5.721			
T3	0.27	1.46	A	0.393	2.078	0.649	0.85	1	23.787	0.56	27.90	A
174.00-154.00			B	0.276	2.362	0.609	0.85	1	15.678			
			C	0.272	2.373	0.608	0.85	1	15.430			
T4	0.30	1.07	A	0.55	1.844	0.724	0.85	1	26.844	0.54	54.35	A
154.00-144.00			B	0.467	1.946	0.681	0.85	1	21.750			

Section Elevation ft	Add Weight K	Self Weight K	Face	e	C_F	R_R	D_F	D_R	A_E ft^2	F K	w plf	Ctrl. Face
			C	0.315	2.258	0.62	0.85	1	13.872			
T5	1.06	2.24	A	0.51	1.887	0.703	0.85	1	59.575	1.32	66.06	B
144.00-124.00			B	0.561	1.833	0.73	0.85	1	67.634			
			C	0.417	2.032	0.658	0.85	1	46.245			
T6	1.32	2.80	A	0.508	1.89	0.701	0.85	1	74.049	1.44	71.96	B
124.00-104.00			B	0.513	1.883	0.704	0.85	1	75.112			
			C	0.444	1.984	0.67	0.85	1	62.546			
T7	1.50	2.87	A	0.484	1.922	0.689	0.85	1	83.229	1.54	77.00	A
104.00-84.00			B	0.472	1.939	0.684	0.85	1	80.641			
			C	0.394	2.076	0.649	0.85	1	64.815			
T8	1.50	4.51	A	0.432	2.004	0.665	0.85	1	84.178	1.52	75.86	A
84.00-64.00			B	0.417	2.03	0.659	0.85	1	80.838			
			C	0.355	2.161	0.634	0.85	1	66.968			
T9	1.51	4.64	A	0.384	2.096	0.645	0.85	1	83.687	1.44	72.06	A
64.00-44.00			B	0.371	2.124	0.64	0.85	1	80.345			
			C	0.317	2.252	0.621	0.85	1	67.479			
T10	1.51	5.56	A	0.359	2.15	0.636	0.85	1	87.782	1.36	67.95	A
44.00-24.00			B	0.347	2.177	0.632	0.85	1	84.564			
			C	0.299	2.298	0.616	0.85	1	72.093			
T11	1.28	5.72	A	0.3	2.295	0.616	0.85	1	80.221	1.31	65.73	A
24.00-4.00			B	0.291	2.32	0.613	0.85	1	77.685			
			C	0.254	2.425	0.603	0.85	1	67.727			
Sum Weight:	10.26	31.89						OTM	923.61 kip-ft	11.33		

Force Totals

Load Case	Vertical Forces K	Sum of Forces X K	Sum of Forces Z K	Sum of Overturning Moments, M_x kip-ft	Sum of Overturning Moments, M_z kip-ft	Sum of Torques kip-ft
Leg Weight	22.18					
Bracing Weight	9.72					
Total Member Self-Weight	31.89			-17.27	-2.53	
Total Weight	54.48			-17.27	-2.53	
Wind 0 deg - No Ice		-0.04	-47.41	-4928.83	3.29	-2.12
Wind 30 deg - No Ice		23.29	-40.37	-4224.72	-2428.30	-4.67
Wind 60 deg - No Ice		40.13	-23.16	-2435.42	-4192.92	-6.32
Wind 90 deg - No Ice		46.62	0.02	-13.31	-4860.93	-6.40
Wind 120 deg - No Ice		41.06	23.74	2443.55	-4255.18	-4.48
Wind 150 deg - No Ice		23.33	40.43	4197.87	-2435.15	-1.09
Wind 180 deg - No Ice		0.04	46.39	4829.12	-8.35	2.06
Wind 210 deg - No Ice		-23.26	40.39	4192.05	2420.02	4.67
Wind 240 deg - No Ice		-41.02	23.67	2433.48	4244.30	6.60
Wind 270 deg - No Ice		-46.62	-0.06	-24.95	4855.87	6.40
Wind 300 deg - No Ice		-40.17	-23.23	-2445.50	4193.68	4.27
Wind 330 deg - No Ice		-23.36	-40.41	-4230.54	2433.32	1.09
Member Ice	15.06					
Total Weight Ice	86.12			-28.77	-4.98	
Wind 0 deg - Ice		-0.03	-52.45	-5441.23	-0.50	-8.08
Wind 30 deg - Ice		25.79	-44.68	-4659.87	-2676.19	-9.12
Wind 60 deg - Ice		44.43	-25.65	-2690.08	-4616.03	-8.10
Wind 90 deg - Ice		51.60	0.02	-25.79	-5352.55	-5.04
Wind 120 deg - Ice		45.42	26.25	2681.34	-4691.59	-0.31
Wind 150 deg - Ice		25.81	44.73	4608.31	-2681.35	4.60
Wind 180 deg - Ice		0.03	51.35	5301.61	-9.47	7.87

Load Case	Vertical Forces K	Sum of Forces X K	Sum of Forces Z K	Sum of Overturning Moments, M_x kip-ft	Sum of Overturning Moments, M_z kip-ft	Sum of Torques kip-ft
Wind 210 deg - Ice		-25.76	44.70	4603.83	2663.61	9.12
Wind 240 deg - Ice		-45.39	26.20	2673.57	4677.14	8.40
Wind 270 deg - Ice		-51.60	-0.05	-34.76	5342.59	5.04
Wind 300 deg - Ice		-44.46	-25.70	-2697.85	4610.55	0.24
Wind 330 deg - Ice		-25.84	-44.71	-4664.35	2673.99	-4.60
Total Weight	54.48			-17.27	-2.53	
Wind 0 deg - Service		-0.02	-18.52	-1918.32	2.38	-0.83
Wind 30 deg - Service		9.10	-15.77	-1643.28	-947.46	-1.83
Wind 60 deg - Service		15.68	-9.05	-944.34	-1636.76	-2.47
Wind 90 deg - Service		18.21	0.01	1.80	-1897.70	-2.50
Wind 120 deg - Service		16.04	9.27	961.51	-1661.08	-1.75
Wind 150 deg - Service		9.11	15.79	1646.79	-950.14	-0.42
Wind 180 deg - Service		0.02	18.12	1893.37	-2.16	0.80
Wind 210 deg - Service		-9.09	15.78	1644.52	946.42	1.83
Wind 240 deg - Service		-16.02	9.25	957.58	1659.03	2.58
Wind 270 deg - Service		-18.21	-0.02	-2.75	1897.92	2.50
Wind 300 deg - Service		-15.69	-9.07	-948.27	1639.25	1.67
Wind 330 deg - Service		-9.12	-15.79	-1645.55	951.61	0.42

Load Combinations

Comb. No.	Description
1	Dead Only
2	Dead+Wind 0 deg - No Ice
3	Dead+Wind 30 deg - No Ice
4	Dead+Wind 60 deg - No Ice
5	Dead+Wind 90 deg - No Ice
6	Dead+Wind 120 deg - No Ice
7	Dead+Wind 150 deg - No Ice
8	Dead+Wind 180 deg - No Ice
9	Dead+Wind 210 deg - No Ice
10	Dead+Wind 240 deg - No Ice
11	Dead+Wind 270 deg - No Ice
12	Dead+Wind 300 deg - No Ice
13	Dead+Wind 330 deg - No Ice
14	Dead+Ice+Temp
15	Dead+Wind 0 deg+Ice+Temp
16	Dead+Wind 30 deg+Ice+Temp
17	Dead+Wind 60 deg+Ice+Temp
18	Dead+Wind 90 deg+Ice+Temp
19	Dead+Wind 120 deg+Ice+Temp
20	Dead+Wind 150 deg+Ice+Temp
21	Dead+Wind 180 deg+Ice+Temp
22	Dead+Wind 210 deg+Ice+Temp
23	Dead+Wind 240 deg+Ice+Temp
24	Dead+Wind 270 deg+Ice+Temp
25	Dead+Wind 300 deg+Ice+Temp
26	Dead+Wind 330 deg+Ice+Temp
27	Dead+Wind 0 deg - Service
28	Dead+Wind 30 deg - Service
29	Dead+Wind 60 deg - Service
30	Dead+Wind 90 deg - Service
31	Dead+Wind 120 deg - Service
32	Dead+Wind 150 deg - Service
33	Dead+Wind 180 deg - Service

Comb. No.	Description
34	Dead+Wind 210 deg - Service
35	Dead+Wind 240 deg - Service
36	Dead+Wind 270 deg - Service
37	Dead+Wind 300 deg - Service
38	Dead+Wind 330 deg - Service

Maximum Member Forces

Section No.	Elevation ft	Component Type	Condition	Gov. Load Comb.	Force K	Major Axis Moment kip-ft	Minor Axis Moment kip-ft
T1	199 - 189	Leg	Max Tension	21	1.46	-0.02	0.11
			Max. Compression	23	-1.93	0.00	-0.00
			Max. Mx	18	-1.66	0.11	-0.01
			Max. My	15	0.56	-0.01	-0.12
			Max. Vy	24	-0.23	0.00	0.00
			Max. Vx	21	0.24	0.00	-0.00
		Diagonal	Max Tension	24	0.33	0.00	0.00
			Max. Compression	18	-0.34	0.00	0.00
			Max. Mx	23	0.03	-0.00	0.00
			Max. My	26	-0.21	-0.00	-0.00
			Max. Vy	23	-0.00	-0.00	0.00
			Max. Vx	26	-0.00	0.00	0.00
		Horizontal	Max Tension	15	0.03	0.00	0.00
			Max. Compression	15	-0.01	0.00	0.00
			Max. Mx	14	0.01	0.00	0.00
			Max. My	19	0.01	0.00	0.00
			Max. Vy	14	0.00	0.00	0.00
			Max. Vx	19	0.00	0.00	0.00
		Top Girt	Max Tension	15	0.04	0.00	0.00
			Max. Compression	25	-0.05	0.00	0.00
			Max. Mx	14	-0.01	0.01	0.00
			Max. My	26	0.00	0.00	-0.00
			Max. Vy	14	0.01	0.00	0.00
			Max. Vx	26	-0.00	0.00	0.00
		Bottom Girt	Max Tension	25	0.17	0.00	0.00
			Max. Compression	23	-0.16	0.00	0.00
			Max. Mx	14	0.01	0.01	0.00
			Max. My	26	0.01	0.00	-0.00
			Max. Vy	14	0.01	0.00	0.00
			Max. Vx	26	-0.00	0.00	0.00
T2	189 - 174	Leg	Max Tension	21	8.28	-0.03	0.28
			Max. Compression	23	-10.78	0.38	-0.18
			Max. Mx	24	-9.52	0.43	0.01
			Max. My	15	-10.50	-0.04	0.42
			Max. Vy	24	-1.43	0.43	0.01
			Max. Vx	15	-1.40	-0.04	0.42
		Diagonal	Max Tension	21	1.51	0.00	0.00
			Max. Compression	24	-1.53	0.00	0.00
			Max. Mx	23	-0.16	-0.00	-0.00
			Max. My	25	-1.32	-0.00	-0.00
			Max. Vy	23	-0.00	-0.00	-0.00
			Max. Vx	25	-0.00	0.00	0.00
		Horizontal	Max Tension	15	0.27	0.00	0.00
			Max. Compression	21	-0.19	0.00	0.00
			Max. Mx	14	0.04	0.00	0.00
			Max. My	19	0.06	0.00	0.00
			Max. Vy	14	0.00	0.00	0.00
			Max. Vx	19	0.00	0.00	0.00

Section No.	Elevation ft	Component Type	Condition	Gov. Load Comb.	Force K	Major Axis Moment kip-ft	Minor Axis Moment kip-ft
		Top Girt	Max Tension	15	0.11	0.00	0.00
			Max. Compression	21	-0.10	0.00	0.00
			Max. Mx	14	-0.01	0.01	0.00
			Max. My	26	-0.00	0.00	-0.00
			Max. Vy	14	0.01	0.00	0.00
			Max. Vx	26	-0.00	0.00	0.00
		Bottom Girt	Max Tension	17	0.81	0.00	0.00
			Max. Compression	19	-0.82	0.00	0.00
			Max. Mx	14	0.00	0.01	0.00
			Max. My	26	0.05	0.00	-0.00
			Max. Vy	14	0.01	0.00	0.00
			Max. Vx	26	-0.00	0.00	0.00
T3	174 - 154	Leg	Max Tension	21	32.68	0.22	0.02
			Max. Compression	23	-39.04	1.19	0.02
			Max. Mx	21	32.68	-1.25	-0.06
			Max. My	20	-1.40	-0.02	-1.03
			Max. Vy	17	2.95	-1.24	-0.02
			Max. Vx	26	-1.95	-0.04	0.81
		Diagonal	Max Tension	18	2.81	0.00	0.00
			Max. Compression	18	-2.91	0.00	0.00
			Max. Mx	15	2.48	-0.01	0.00
			Max. My	25	-1.85	-0.00	-0.00
			Max. Vy	25	-0.01	-0.01	0.00
			Max. Vx	25	0.00	0.00	0.00
		Horizontal	Max Tension	21	0.60	0.00	0.00
			Max. Compression	15	-0.47	0.00	0.00
			Max. Mx	14	0.09	0.01	0.00
			Max. My	19	0.16	0.00	0.00
			Max. Vy	14	-0.01	0.00	0.00
			Max. Vx	19	-0.00	0.00	0.00
		Top Girt	Max Tension	19	0.89	0.00	0.00
			Max. Compression	17	-0.88	0.00	0.00
			Max. Mx	14	-0.01	0.01	0.00
			Max. My	26	-0.07	0.00	-0.00
			Max. Vy	14	-0.01	0.00	0.00
			Max. Vx	26	0.00	0.00	0.00
		Bottom Girt	Max Tension	21	0.99	0.00	0.00
			Max. Compression	15	-0.74	0.00	0.00
			Max. Mx	14	0.10	0.01	0.00
			Max. My	21	-0.25	0.00	-0.00
			Max. Vy	14	-0.01	0.00	0.00
			Max. Vx	21	0.00	0.00	0.00
T4	154 - 144	Leg	Max Tension	21	38.14	-1.25	-0.06
			Max. Compression	15	-45.52	3.54	-0.01
			Max. Mx	25	36.70	-4.12	-0.03
			Max. My	24	-4.68	-0.27	-4.47
			Max. Vy	21	0.97	-4.11	-0.01
			Max. Vx	24	1.06	-0.27	-4.47
		Diagonal	Max Tension	25	5.61	0.00	0.00
			Max. Compression	19	-6.26	0.00	0.00
			Max. Mx	25	4.92	0.05	0.00
			Max. My	19	-6.23	-0.03	-0.01
			Max. Vy	25	0.02	0.05	0.00
			Max. Vx	25	-0.00	0.00	0.00
T5	144 - 124	Leg	Max Tension	25	74.56	-3.20	-0.02
			Max. Compression	15	-90.20	4.25	0.03
			Max. Mx	25	74.03	-4.35	-0.02
			Max. My	24	-5.78	-0.27	-4.47
			Max. Vy	8	-0.81	-3.97	0.02
			Max. Vx	11	-0.75	-0.18	-4.21
		Diagonal	Max Tension	22	7.57	0.00	0.00

Section No.	Elevation ft	Component Type	Condition	Gov. Load Comb.	Force K	Major Axis Moment kip-ft	Minor Axis Moment kip-ft
			Max. Compression	22	-7.76	0.00	0.00
			Max. Mx	15	5.75	0.05	0.00
			Max. My	21	-6.46	-0.00	-0.01
			Max. Vy	15	-0.02	0.05	0.00
			Max. Vx	21	0.00	0.00	0.00
T6	124 - 104	Leg	Max Tension	25	113.91	-4.56	-0.02
			Max. Compression	15	-136.91	4.13	0.01
			Max. Mx	25	113.91	-4.56	-0.02
			Max. My	26	-10.87	-0.03	4.16
			Max. Vy	8	0.75	-4.43	0.01
			Max. Vx	11	-0.69	-0.04	-3.86
		Diagonal	Max Tension	22	8.91	0.00	0.00
			Max. Compression	22	-9.20	0.00	0.00
			Max. Mx	15	7.09	0.08	0.00
			Max. My	21	-7.60	0.00	-0.01
			Max. Vy	17	0.03	0.08	0.01
			Max. Vx	21	0.00	0.00	0.00
T7	104 - 84	Leg	Max Tension	25	153.23	-3.77	-0.03
			Max. Compression	15	-182.63	5.81	0.07
			Max. Mx	15	-182.63	5.81	0.07
			Max. My	26	-13.48	0.03	5.19
			Max. Vy	21	0.32	-5.65	-0.05
			Max. Vx	24	0.19	0.05	-5.16
		Diagonal	Max Tension	22	9.01	0.00	0.00
			Max. Compression	22	-9.24	0.00	0.00
			Max. Mx	15	7.01	0.09	0.01
			Max. My	21	-7.88	0.01	-0.01
			Max. Vy	15	-0.03	0.09	0.01
			Max. Vx	21	0.00	0.00	0.00
T8	84 - 64	Leg	Max Tension	25	188.76	-4.24	-0.02
			Max. Compression	15	-225.44	4.68	0.01
			Max. Mx	15	-203.62	5.81	0.07
			Max. My	26	-14.45	0.03	5.19
			Max. Vy	21	-0.28	-5.65	-0.05
			Max. Vx	20	-0.22	0.03	-5.16
		Diagonal	Max Tension	22	9.25	0.00	0.00
			Max. Compression	22	-9.52	0.00	0.00
			Max. Mx	15	7.27	0.13	0.01
			Max. My	21	-7.92	0.03	-0.01
			Max. Vy	17	0.05	0.12	0.01
			Max. Vx	21	0.00	0.00	0.00
T9	64 - 44	Leg	Max Tension	25	220.43	-4.23	-0.03
			Max. Compression	15	-264.86	4.30	0.03
			Max. Mx	25	219.72	-5.57	-0.03
			Max. My	26	-20.06	-0.68	4.88
			Max. Vy	21	0.25	-5.55	-0.02
			Max. Vx	18	-0.14	0.05	4.82
		Diagonal	Max Tension	22	9.24	0.00	0.00
			Max. Compression	22	-9.53	0.00	0.00
			Max. Mx	15	7.37	0.14	0.01
			Max. My	21	-8.07	0.04	-0.01
			Max. Vy	25	0.05	0.14	0.01
			Max. Vx	21	0.00	0.00	0.00
T10	44 - 24	Leg	Max Tension	25	248.46	-2.26	-0.03
			Max. Compression	15	-302.97	-0.56	0.00
			Max. Mx	25	247.65	-10.09	-0.02
			Max. My	26	-20.79	-0.68	4.88
			Max. Vy	21	0.89	-10.06	0.00
			Max. Vx	18	0.17	2.30	4.26
		Diagonal	Max Tension	22	10.41	0.00	0.00
			Max. Compression	22	-10.00	0.00	0.00

Section No.	Elevation ft	Component Type	Condition	Gov. Load Comb.	Force K	Major Axis Moment kip-ft	Minor Axis Moment kip-ft
			Max. Mx	15	7.41	0.18	0.01
			Max. My	16	-8.65	0.05	0.02
			Max. Vy	17	0.06	0.17	0.01
			Max. Vx	16	-0.00	0.00	0.00
T11	24 - 4	Leg	Max Tension	17	272.03	3.51	0.04
			Max. Compression	15	-339.25	-0.00	-0.00
			Max. Mx	15	-317.93	12.47	0.00
			Max. My	26	-29.60	7.92	8.17
			Max. Vy	21	-1.46	-10.06	0.00
			Max. Vx	26	0.90	7.92	8.17
		Diagonal	Max Tension	22	13.62	0.00	0.00
			Max. Compression	22	-11.85	0.00	0.00
			Max. Mx	17	4.68	0.22	0.02
			Max. My	17	-10.65	0.13	0.03
			Max. Vy	17	0.07	0.22	0.02
			Max. Vx	17	-0.00	0.00	0.00

Maximum Reactions

Location	Condition	Gov. Load Comb.	Vertical K	Horizontal, X K	Horizontal, Z K
Leg C	Max. Vert	23	341.91	24.53	-14.47
	Max. H_x	10	301.99	26.60	-15.59
	Max. H_z	17	-281.90	-31.28	18.31
	Min. Vert	17	-281.90	-31.28	18.31
	Min. H_x	17	-281.90	-31.28	18.31
	Min. H_z	10	301.99	26.60	-15.59
Leg B	Max. Vert	19	342.87	-24.68	-14.30
	Max. H_x	25	-281.85	31.42	18.12
	Max. H_z	25	-281.85	31.42	18.12
	Min. Vert	25	-281.85	31.42	18.12
	Min. H_x	6	302.83	-26.67	-15.57
	Min. H_z	6	302.83	-26.67	-15.57
Leg A	Max. Vert	15	345.03	-0.22	28.57
	Max. H_x	24	30.72	2.34	-4.02
	Max. H_z	2	304.09	-0.06	30.91
	Min. Vert	21	-279.53	0.24	-36.21
	Min. H_x	18	30.20	-2.33	-4.07
	Min. H_z	21	-279.53	0.24	-36.21

Tower Mast Reaction Summary

Load Combination	Vertical K	$Shear_x$ K	$Shear_z$ K	Overturning Moment, M_x kip-ft	Overturning Moment, M_z kip-ft	Torque kip-ft
Dead Only	54.48	0.00	0.00	-17.12	-2.53	-0.00
Dead+Wind 0 deg - No Ice	54.48	-0.04	-47.41	-4952.40	3.31	-2.11
Dead+Wind 30 deg - No Ice	54.48	23.29	-40.37	-4244.97	-2440.03	-4.69
Dead+Wind 60 deg - No Ice	54.48	40.13	-23.16	-2447.06	-4213.18	-6.39
Dead+Wind 90 deg - No Ice	54.48	46.62	0.02	-13.24	-4884.40	-6.48
Dead+Wind 120 deg - No Ice	54.48	41.06	23.74	2455.46	-4275.66	-4.56
Dead+Wind 150 deg - No Ice	54.48	23.33	40.43	4218.31	-2446.91	-1.13

Load Combination	Vertical K	$Shear_x$ K	$Shear_z$ K	Overturning Moment, M_x kip-ft	Overturning Moment, M_z kip-ft	Torque kip-ft
Dead+Wind 180 deg - No Ice	54.48	0.04	46.39	4852.64	-8.39	2.04
Dead+Wind 210 deg - No Ice	54.48	-23.26	40.39	4212.46	2431.71	4.70
Dead+Wind 240 deg - No Ice	54.48	-41.02	23.67	2445.33	4264.74	6.67
Dead+Wind 270 deg - No Ice	54.48	-46.62	-0.06	-24.94	4879.32	6.48
Dead+Wind 300 deg - No Ice	54.48	-40.17	-23.23	-2457.19	4213.96	4.34
Dead+Wind 330 deg - No Ice	54.48	-23.36	-40.41	-4250.82	2445.08	1.13
Dead+Ice+Temp	86.12	-0.00	0.00	-28.57	-4.99	0.00
Dead+Wind 0 deg+Ice+Temp	86.12	-0.03	-52.45	-5478.83	-0.49	-8.05
Dead+Wind 30 deg+Ice+Temp	86.12	25.79	-44.68	-4692.13	-2694.84	-9.15
Dead+Wind 60 deg+Ice+Temp	86.12	44.43	-25.65	-2708.65	-4648.24	-8.22
Dead+Wind 90 deg+Ice+Temp	86.12	51.60	0.02	-25.78	-5389.87	-5.21
Dead+Wind 120 deg+Ice+Temp	86.12	45.42	26.25	2700.21	-4724.21	-0.46
Dead+Wind 150 deg+Ice+Temp	86.12	25.81	44.73	4640.69	-2700.02	4.52
Dead+Wind 180 deg+Ice+Temp	86.12	0.03	51.35	5338.86	-9.52	7.84
Dead+Wind 210 deg+Ice+Temp	86.12	-25.76	44.70	4636.16	2682.18	9.15
Dead+Wind 240 deg+Ice+Temp	86.12	-45.39	26.20	2692.36	4709.67	8.51
Dead+Wind 270 deg+Ice+Temp	86.12	-51.60	-0.05	-34.83	5379.84	5.21
Dead+Wind 300 deg+Ice+Temp	86.12	-44.46	-25.70	-2716.47	4642.73	0.38
Dead+Wind 330 deg+Ice+Temp	86.12	-25.84	-44.71	-4696.64	2692.66	-4.52
Dead+Wind 0 deg - Service	54.48	-0.02	-18.52	-1945.05	-0.25	-0.82
Dead+Wind 30 deg - Service	54.48	9.10	-15.77	-1668.70	-954.70	-1.84
Dead+Wind 60 deg - Service	54.48	15.68	-9.05	-966.37	-1647.35	-2.49
Dead+Wind 90 deg - Service	54.48	18.21	0.01	-15.64	-1909.55	-2.53
Dead+Wind 120 deg - Service	54.48	16.04	9.27	948.71	-1671.76	-1.78
Dead+Wind 150 deg - Service	54.48	9.11	15.79	1637.33	-957.39	-0.44
Dead+Wind 180 deg - Service	54.48	0.02	18.12	1885.12	-4.82	0.80
Dead+Wind 210 deg - Service	54.48	-9.09	15.78	1635.04	948.36	1.84
Dead+Wind 240 deg - Service	54.48	-16.02	9.25	944.75	1664.40	2.60
Dead+Wind 270 deg - Service	54.48	-18.21	-0.02	-20.21	1904.48	2.53
Dead+Wind 300 deg - Service	54.48	-15.69	-9.07	-970.33	1644.56	1.70
Dead+Wind 330 deg - Service	54.48	-9.12	-15.79	-1670.99	953.58	0.44

Solution Summary

	Sum of Applied Forces			Sum of Reactions			
Load Comb.	PX K	PY K	PZ K	PX K	PY K	PZ K	% Error
1	0.00	-54.48	0.00	0.00	54.48	0.00	0.000%
2	-0.04	-54.48	-47.41	0.04	54.48	47.41	0.000%
3	23.29	-54.48	-40.37	-23.29	54.48	40.37	0.000%
4	40.13	-54.48	-23.16	-40.13	54.48	23.16	0.000%
5	46.62	-54.48	0.02	-46.62	54.48	-0.02	0.000%
6	41.06	-54.48	23.74	-41.06	54.48	-23.74	0.000%
7	23.33	-54.48	40.43	-23.33	54.48	-40.43	0.000%
8	0.04	-54.48	46.39	-0.04	54.48	-46.39	0.000%
9	-23.26	-54.48	40.39	23.26	54.48	-40.39	0.000%
10	-41.02	-54.48	23.67	41.02	54.48	-23.67	0.000%
11	-46.62	-54.48	-0.06	46.62	54.48	0.06	0.000%
12	-40.17	-54.48	-23.23	40.17	54.48	23.23	0.000%
13	-23.36	-54.48	-40.41	23.36	54.48	40.41	0.000%
14	0.00	-86.12	0.00	0.00	86.12	-0.00	0.000%
15	-0.03	-86.12	-52.45	0.03	86.12	52.45	0.000%
16	25.79	-86.12	-44.68	-25.79	86.12	44.68	0.000%
17	44.43	-86.12	-25.65	-44.43	86.12	25.65	0.000%
18	51.60	-86.12	0.02	-51.60	86.12	-0.02	0.000%
19	45.42	-86.12	26.25	-45.42	86.12	-26.25	0.000%
20	25.81	-86.12	44.73	-25.81	86.12	-44.73	0.000%
21	0.03	-86.12	51.35	-0.03	86.12	-51.35	0.000%

Load Comb.	Sum of Applied Forces PX K	PY K	PZ K	Sum of Reactions PX K	PY K	PZ K	% Error
22	-25.76	-86.12	44.70	25.76	86.12	-44.70	0.000%
23	-45.39	-86.12	26.20	45.39	86.12	-26.20	0.000%
24	-51.60	-86.12	-0.05	51.60	86.12	0.05	0.000%
25	-44.46	-86.12	-25.70	44.46	86.12	25.70	0.000%
26	-25.84	-86.12	-44.71	25.84	86.12	44.71	0.000%
27	-0.02	-54.48	-18.52	0.02	54.48	18.52	0.000%
28	9.10	-54.48	-15.77	-9.10	54.48	15.77	0.000%
29	15.68	-54.48	-9.05	-15.68	54.48	9.05	0.000%
30	18.21	-54.48	0.01	-18.21	54.48	-0.01	0.000%
31	16.04	-54.48	9.27	-16.04	54.48	-9.27	0.000%
32	9.11	-54.48	15.79	-9.11	54.48	-15.79	0.000%
33	0.02	-54.48	18.12	-0.02	54.48	-18.12	0.000%
34	-9.09	-54.48	15.78	9.09	54.48	-15.78	0.000%
35	-16.02	-54.48	9.25	16.02	54.48	-9.25	0.000%
36	-18.21	-54.48	-0.02	18.21	54.48	0.02	0.000%
37	-15.69	-54.48	-9.07	15.69	54.48	9.07	0.000%
38	-9.12	-54.48	-15.79	9.12	54.48	15.79	0.000%

Non-Linear Convergence Results

Load Combination	Converged?	Number of Cycles	Displacement Tolerance	Force Tolerance
1	Yes	4	0.00000001	0.00000001
2	Yes	4	0.00000001	0.00000001
3	Yes	4	0.00000001	0.00000001
4	Yes	4	0.00000001	0.00000001
5	Yes	4	0.00000001	0.00000001
6	Yes	4	0.00000001	0.00000001
7	Yes	4	0.00000001	0.00000001
8	Yes	4	0.00000001	0.00000001
9	Yes	4	0.00000001	0.00000001
10	Yes	4	0.00000001	0.00000001
11	Yes	4	0.00000001	0.00000001
12	Yes	4	0.00000001	0.00000001
13	Yes	4	0.00000001	0.00000001
14	Yes	4	0.00000001	0.00000001
15	Yes	4	0.00000001	0.00000097
16	Yes	4	0.00000001	0.00000124
17	Yes	4	0.00000001	0.00000131
18	Yes	4	0.00000001	0.00000134
19	Yes	4	0.00000001	0.00000098
20	Yes	4	0.00000001	0.00000126
21	Yes	4	0.00000001	0.00000131
22	Yes	4	0.00000001	0.00000124
23	Yes	4	0.00000001	0.00000098
24	Yes	4	0.00000001	0.00000135
25	Yes	4	0.00000001	0.00000131
26	Yes	4	0.00000001	0.00000125
27	Yes	4	0.00000001	0.00000001
28	Yes	4	0.00000001	0.00000001
29	Yes	4	0.00000001	0.00000001
30	Yes	4	0.00000001	0.00000001
31	Yes	4	0.00000001	0.00000001
32	Yes	4	0.00000001	0.00000001
33	Yes	4	0.00000001	0.00000001
34	Yes	4	0.00000001	0.00000001

35	Yes	4	0.00000001	0.00000001
36	Yes	4	0.00000001	0.00000001
37	Yes	4	0.00000001	0.00000001
38	Yes	4	0.00000001	0.00000001

Maximum Tower Deflections - Service Wind

Section No.	Elevation ft	Horz. Deflection in	Gov. Load Comb.	Tilt °	Twist °
T1	199 - 189	7.774	27	0.3380	0.0247
T2	189 - 174	7.061	27	0.3367	0.0205
T3	174 - 154	5.990	27	0.3282	0.0121
T4	154 - 144	4.636	27	0.2968	0.0051
T5	144 - 124	4.018	27	0.2739	0.0057
T6	124 - 104	2.907	27	0.2302	0.0048
T7	104 - 84	1.980	27	0.1891	0.0039
T8	84 - 64	1.241	27	0.1418	0.0028
T9	64 - 44	0.699	27	0.1030	0.0021
T10	44 - 24	0.321	27	0.0631	0.0014
T11	24 - 4	0.094	27	0.0315	0.0007

Critical Deflections and Radius of Curvature - Service Wind

Elevation ft	Appurtenance	Gov. Load Comb.	Deflection in	Tilt °	Twist °	Radius of Curvature ft
200.00	4-ft Lightning Rod	27	7.774	0.3380	0.0247	327276
199.00	DB224	27	7.774	0.3380	0.0247	327276
176.00	15' T-Frame	27	6.132	0.3300	0.0133	69517
165.00	15' T-Frame	27	5.365	0.3170	0.0075	36952
150.00	15' T-Frame	27	4.384	0.2879	0.0055	27773
140.00	15' T-Frame	27	3.782	0.2647	0.0056	29447
130.00	APXV18-206517-C	27	3.221	0.2427	0.0053	26271
119.00	ROHN 6'x15' Boom Gate (1)	27	2.657	0.2202	0.0045	25226
109.00	VHLP2-23	27	2.195	0.1999	0.0041	26433
99.00	Beacon	27	1.777	0.1774	0.0036	25747
78.00	GPS	27	1.058	0.1294	0.0026	24457

Maximum Tower Deflections - Design Wind

Section No.	Elevation ft	Horz. Deflection in	Gov. Load Comb.	Tilt °	Twist °
T1	199 - 189	21.833	15	0.9585	0.1165
T2	189 - 174	19.811	15	0.9541	0.1022
T3	174 - 154	16.778	15	0.9264	0.0705
T4	154 - 144	12.970	15	0.8311	0.0394
T5	144 - 124	11.243	15	0.7652	0.0287
T6	124 - 104	8.146	15	0.6425	0.0198
T7	104 - 84	5.563	15	0.5282	0.0149

Section No.	Elevation ft	Horz. Deflection in	Gov. Load Comb.	Tilt °	Twist °
T8	84 - 64	3.493	15	0.3971	0.0107
T9	64 - 44	1.971	15	0.2890	0.0078
T10	44 - 24	0.906	15	0.1776	0.0049
T11	24 - 4	0.267	15	0.0887	0.0024

Critical Deflections and Radius of Curvature - Design Wind

Elevation ft	Appurtenance	Gov. Load Comb.	Deflection in	Tilt °	Twist °	Radius of Curvature ft
200.00	4-ft Lightning Rod	15	21.833	0.9585	0.1165	116708
199.00	DB224	15	21.833	0.9585	0.1165	116708
176.00	15' T-Frame	15	17.178	0.9321	0.0749	21335
165.00	15' T-Frame	15	15.015	0.8914	0.0523	12058
150.00	15' T-Frame	15	12.265	0.8053	0.0348	9476
140.00	15' T-Frame	15	10.585	0.7391	0.0262	10347
130.00	APXV18-206517-C	15	9.023	0.6773	0.0218	9404
119.00	ROHN 6'x15' Boom Gate (1)	15	7.451	0.6146	0.0184	9115
109.00	VHLP2-23	15	6.161	0.5584	0.0160	9604
99.00	Beacon	15	4.995	0.4957	0.0138	9358
78.00	GPS	15	2.981	0.3629	0.0098	8816

Bolt Design Data

Section No.	Elevation ft	Component Type	Bolt Grade	Bolt Size in	Number Of Bolts	Maximum Load per Bolt K	Allowable Load K	Ratio Load / Allowable	Allowable Ratio	Criteria
T1	199	Leg	A325N	0.5625	3	0.64	10.44	0.062 ✔	1.333	Bolt DS
T2	189	Leg	A325N	0.6250	5	2.16	12.89	0.167 ✔	1.333	Bolt DS
T3	174	Leg	A325N	1.0000	6	5.45	34.54	0.158 ✔	1.333	Bolt Tension
T4	154	Leg	A325N	1.0000	6	6.36	34.56	0.184 ✔	1.333	Bolt Tension
		Diagonal	A325N	1.0000	1	5.61	9.52	0.590 ✔	1.333	Member Bearing
T5	144	Leg	A325N	1.0000	6	12.43	34.56	0.360 ✔	1.333	Bolt Tension
		Diagonal	A325N	1.0000	1	7.57	9.52	0.796 ✔	1.333	Member Bearing
T6	124	Leg	A325N	1.0000	6	18.99	34.56	0.549 ✔	1.333	Bolt Tension
		Diagonal	A325N	1.0000	1	8.91	9.52	0.936 ✔	1.333	Member Bearing
T7	104	Leg	A325N	1.0000	6	25.54	34.56	0.739 ✔	1.333	Bolt Tension
		Diagonal	A325N	1.0000	1	9.01	9.52	0.947 ✔	1.333	Member Bearing
T8	84	Leg	A325N	1.2500	6	31.46	54.00	0.583 ✔	1.333	Bolt Tension
		Diagonal	A325N	1.2500	1	9.25	20.39	0.454 ✔	1.333	Member Bearing
T9	64	Leg	A325N	1.2500	6	36.74	54.00	0.680 ✔	1.333	Bolt Tension
		Diagonal	A325N	1.2500	1	9.24	20.39	0.453 ✔	1.333	Member Bearing
T10	44	Leg	A325N	1.2500	6	41.41	54.00	0.767 ✔	1.333	Bolt Tension

Section No.	Elevation ft	Component Type	Bolt Grade	Bolt Size in	Number Of Bolts	Maximum Load per Bolt K	Allowable Load K	Ratio Load / Allowable	Allowable Ratio	Criteria
		Diagonal	A325N	1.2500	1	10.41	20.39	0.510 ✓	1.333	Member Bearing
T11	24	Leg	A687	1.2500	6	45.34	60.75	0.746 ✓	1.333	Bolt Tension
		Diagonal	A325N	1.2500	1	13.62	20.39	0.668 ✓	1.333	Member Bearing

Compression Checks

Leg Design Data (Compression)

Section No.	Elevation ft	Size	L ft	L_u ft	Kl/r	F_a ksi	A in^2	Actual P K	Allow. P_a K	Ratio P / P_a
T1	199 - 189	1 1/2	10.00	2.25	72.0 K=1.00	20.564	1.7672	-1.93	36.34	0.053 ✓
T2	189 - 174	1 1/2	15.00	2.33	74.7 K=1.00	20.058	1.7672	-10.78	35.44	0.304 ✓
T3	174 - 154	2	20.01	2.38	57.0 K=1.00	23.219	3.1416	-39.04	72.94	0.535 ✓
T4	154 - 144	Pirod 105244	10.02	10.02	45.4 K=1.00	25.051	3.6816	-45.52	92.23	0.494 ✓
T5	144 - 124	Pirod 105217	20.03	10.02	37.8 K=1.00	26.132	5.3014	-90.20	138.54	0.651 ✓
T6	124 - 104	Pirod 105218	20.03	10.02	32.4 K=1.00	26.848	7.2158	-136.91	193.73	0.707 ✓
T7	104 - 84	Pirod 105218	20.03	10.02	32.4 K=1.00	26.848	7.2158	-182.63	193.73	0.943 ✓
T8	84 - 64	Pirod 105219	20.03	10.02	28.4 K=1.00	27.351	9.4248	-225.44	257.78	0.875 ✓
T9	64 - 44	Pirod 105219	20.03	10.02	28.4 K=1.00	27.351	9.4248	-264.86	257.78	1.027 ✓
T10	44 - 24	Pirod 105220	20.03	10.02	25.2 K=1.00	27.723	11.9282	-302.97	330.69	0.916 ✓
T11	24 - 4	Pirod 105220	20.03	10.02	25.2 K=1.00	27.723	11.9282	-339.25	330.69	1.026 ✓

Truss-Leg Diagonal Data

Section No.	Elevation ft	Diagonal Size	L_d ft	Kl/r	F_a ksi	A in^2	Actual V K	Allow. V_a K	Stress Ratio
T4	154 - 144	0.5	1.48	121.0	10.193	0.1963	1.06	2.24	0.474 ✓
T5	144 - 124	0.5	1.47	120.0	10.279	0.1963	0.81	2.26	0.357 ✓

Section No.	Elevation ft	Diagonal Size	L_d ft	Kl/r	F_a ksi	A in^2	Actual V K	Allow. V_a K	Stress Ratio
T6	124 - 104	0.5	1.46	119.0	10.423	0.1963	0.75	2.29	0.328 ✓
T7	104 - 84	0.5	1.46	119.0	10.423	0.1963	0.32	2.29	0.139 ✓
T8	84 - 64	0.625	1.45	94.4	13.671	0.3068	0.28	4.69	0.059 ✓
T9	64 - 44	0.625	1.45	94.4	13.671	0.3068	0.25	4.69	0.053 ✓
T10	44 - 24	0.625	1.43	93.6	13.766	0.3068	0.89	4.73	0.188 ✓
T11	24 - 4	0.625	1.43	93.6	13.766	0.3068	1.49	4.73	0.315 ✓

Diagonal Design Data (Compression)

Section No.	Elevation ft	Size	L ft	L_u ft	Kl/r	F_a ksi	A in^2	Actual P K	Allow. P_a K	Ratio $\frac{P}{P_a}$
T1	199 - 189	3/4	4.59	2.22	106.7 K=0.75	13.115	0.4418	-0.34	5.79	0.059 ✓
T2	189 - 174	3/4	4.63	2.24	107.7 K=0.75	12.882	0.4418	-1.53	5.69	0.268 ✓
T3	174 - 154	1	5.46	2.67	96.1 K=0.75	15.590	0.7854	-2.91	12.24	0.238 ✓
T4	154 - 144	L2 1/2x2 1/2x3/16	11.42	5.00	121.3 K=1.00	10.097	0.9020	-6.26	9.11	0.688 ✓
T5	144 - 124	L2 1/2x2 1/2x3/16	12.50	5.65	136.9 K=1.00	7.965	0.9020	-7.76	7.18	1.080 ✓
T6	124 - 104	L3x3x3/16	13.80	6.35	127.8 K=1.00	9.141	1.0900	-9.20	9.96	0.923 ✓
T7	104 - 84	L3x3x3/16	15.24	7.10	143.0 K=1.00	7.302	1.0900	-9.14	7.96	1.148 ✓
T8	84 - 64	L3x3x5/16	16.80	7.86	160.2 K=1.00	5.822	1.7800	-9.42	10.36	0.909 ✓
T9	64 - 44	L3x3x5/16	18.45	8.70	177.2 K=1.00	4.756	1.7800	-9.53	8.47	1.125 ✓
T10	44 - 24	L3 1/2x3 1/2x5/16	19.30	9.14	158.9 K=1.00	5.916	2.0900	-10.00	12.36	0.809 ✓
T11	24 - 4	L3 1/2x3 1/2x5/16	21.03	10.01	174.1 K=1.00	4.928	2.0900	-11.85	10.30	1.150 ✓

Horizontal Design Data (Compression)

Section No.	Elevation ft	Size	L ft	L_u ft	Kl/r	F_a ksi	A in^2	Actual P K	Allow. P_a K	Ratio $\frac{P}{P_a}$
T1	199 - 189	3/4	4.00	3.88	173.6	4.955	0.4418	-0.01	2.19	0.007

Section No.	Elevation ft	Size	L ft	L_u ft	Kl/r	F_a ksi	A in^2	Actual P K	Allow. P_a K	Ratio $\frac{P}{P_a}$
					K=0.70					✔
T2	189 - 174	3/4	4.00	3.88	173.6 K=0.70	4.955	0.4418	-0.19	2.19	0.086 ✔
T3	174 - 154	7/8	4.14	3.98	152.7 K=0.70	6.403	0.6013	-0.47	3.85	0.122 ✔

Top Girt Design Data (Compression)

Section No.	Elevation ft	Size	L ft	L_u ft	Kl/r	F_a ksi	A in^2	Actual P K	Allow. P_a K	Ratio $\frac{P}{P_a}$
T1	199 - 189	7/8	4.00	3.88	148.8 K=0.70	6.744	0.6013	-0.05	4.06	0.013 ✔
T2	189 - 174	7/8	4.00	3.88	148.8 K=0.70	6.744	0.6013	-0.10	4.06	0.025 ✔
T3	174 - 154	1	4.02	3.86	129.6 K=0.70	8.885	0.7854	-0.88	6.98	0.127 ✔

Bottom Girt Design Data (Compression)

Section No.	Elevation ft	Size	L ft	L_u ft	Kl/r	F_a ksi	A in^2	Actual P K	Allow. P_a K	Ratio $\frac{P}{P_a}$
T1	199 - 189	7/8	4.00	3.88	148.8 K=0.70	6.744	0.6013	-0.16	4.06	0.039 ✔
T2	189 - 174	7/8	4.00	3.88	148.8 K=0.70	6.744	0.6013	-0.82	4.06	0.203 ✔
T3	174 - 154	1	4.98	4.81	161.6 K=0.70	5.721	0.7854	-0.74	4.49	0.165 ✔

Tension Checks

Leg Design Data (Tension)

Section No.	Elevation ft	Size	L ft	L_u ft	Kl/r	F_a ksi	A in^2	Actual P K	Allow. P_a K	Ratio $\frac{P}{P_a}$
T1	199 - 189	1 1/2	10.00	2.25	72.0	32.500	0.8575	1.46	27.87	0.052 ✔
T2	189 - 174	1 1/2	15.00	2.33	74.7	32.500	0.7732	8.28	25.13	0.330 ✔
T3	174 - 154	2	20.01	2.38	57.0	30.000	3.1416	32.68	94.25	0.347

Section No.	Elevation ft	Size	L ft	L_u ft	Kl/r	F_a ksi	A in^2	Actual P K	Allow. P_a K	Ratio $\frac{P}{P_a}$
T4	154 - 144	Pirod 105244	10.02	10.02	45.4	30.000	3.6816	38.14	110.45	0.345 ✓
T5	144 - 124	Pirod 105217	20.03	10.02	37.8	30.000	5.3014	74.56	159.04	0.469 ✓
T6	124 - 104	Pirod 105218	20.03	10.02	32.4	30.000	7.2158	113.91	216.47	0.526 ✓
T7	104 - 84	Pirod 105218	20.03	10.02	32.4	30.000	7.2158	153.23	216.47	0.708 ✓
T8	84 - 64	Pirod 105219	20.03	10.02	28.4	30.000	9.4248	188.76	282.74	0.668 ✓
T9	64 - 44	Pirod 105219	20.03	10.02	28.4	30.000	9.4248	220.43	282.74	0.780 ✓
T10	44 - 24	Pirod 105220	20.03	10.02	25.2	30.000	11.9282	248.46	357.85	0.694 ✓
T11	24 - 4	Pirod 105220	20.03	10.02	25.2	30.000	11.9282	272.02	357.85	0.760 ✓

Truss-Leg Diagonal Data

Section No.	Elevation ft	Diagonal Size	L_d ft	Kl/r	F_a ksi	A in^2	Actual V K	Allow. V_a K	Stress Ratio
T4	154 - 144	0.5	1.48	121.0	10.193	0.1963	1.06	2.24	0.474 ✓
T5	144 - 124	0.5	1.47	120.0	10.279	0.1963	0.81	2.26	0.357 ✓
T6	124 - 104	0.5	1.46	119.0	10.423	0.1963	0.75	2.29	0.328 ✓
T7	104 - 84	0.5	1.46	119.0	10.423	0.1963	0.32	2.29	0.139 ✓
T8	84 - 64	0.625	1.45	94.4	13.671	0.3068	0.28	4.69	0.059 ✓
T9	64 - 44	0.625	1.45	94.4	13.671	0.3068	0.25	4.69	0.053 ✓
T10	44 - 24	0.625	1.43	93.6	13.766	0.3068	0.89	4.73	0.188 ✓
T11	24 - 4	0.625	1.43	93.6	13.766	0.3068	1.49	4.73	0.315 ✓

Diagonal Design Data (Tension)

Section No.	Elevation ft	Size	L ft	L_u ft	Kl/r	F_a ksi	A in^2	Actual P K	Allow. P_a K	Ratio $\frac{P}{P_a}$
T1	199 - 189	3/4	4.59	2.22	142.3	30.000	0.4418	0.33	13.25	0.025 ✓

Section No.	Elevation ft	Size	L ft	L_u ft	Kl/r	F_a ksi	A in^2	Actual P K	Allow. P_a K	Ratio $\frac{P}{P_a}$
T2	189 - 174	3/4	4.63	2.24	143.6	30.000	0.4418	1.51	13.25	0.114 ✔
T3	174 - 154	1	5.46	2.67	128.2	30.000	0.7854	2.81	23.56	0.119 ✔
T4	154 - 144	L2 1/2x2 1/2x3/16	11.42	5.00	80.1	21.600	0.9020	5.61	19.48	0.288 ✔
T5	144 - 124	L2 1/2x2 1/2x3/16	11.93	5.40	86.2	21.600	0.9020	7.57	19.48	0.389 ✔
T6	124 - 104	L3x3x3/16	13.80	6.35	83.5	21.600	1.0900	8.91	23.54	0.378 ✔
T7	104 - 84	L3x3x3/16	14.50	6.75	88.6	21.600	1.0900	9.01	23.54	0.383 ✔
T8	84 - 64	L3x3x5/16	16.01	7.47	100.3	21.600	1.7800	9.25	38.45	0.241 ✔
T9	64 - 44	L3x3x5/16	18.45	8.70	116.2	21.600	1.7800	9.24	38.45	0.240 ✔
T10	44 - 24	L3 1/2x3 1/2x5/16	20.16	9.56	108.8	21.600	2.0900	10.41	45.14	0.231 ✔
T11	24 - 4	L3 1/2x3 1/2x5/16	21.92	10.45	118.6	21.600	2.0900	13.62	45.14	0.302 ✔

Horizontal Design Data (Tension)

Section No.	Elevation ft	Size	L ft	L_u ft	Kl/r	F_a ksi	A in^2	Actual P K	Allow. P_a K	Ratio $\frac{P}{P_a}$
T1	199 - 189	3/4	4.00	3.88	248.0	30.000	0.4418	0.03	13.25	0.002 ✔
T2	189 - 174	3/4	4.00	3.88	248.0	30.000	0.4418	0.27	13.25	0.020 ✔
T3	174 - 154	7/8	4.14	3.98	218.2	30.000	0.6013	0.60	18.04	0.033 ✔

Top Girt Design Data (Tension)

Section No.	Elevation ft	Size	L ft	L_u ft	Kl/r	F_a ksi	A in^2	Actual P K	Allow. P_a K	Ratio $\frac{P}{P_a}$
T1	199 - 189	7/8	4.00	3.88	212.6	30.000	0.6013	0.04	18.04	0.002 ✔
T2	189 - 174	7/8	4.00	3.88	212.6	30.000	0.6013	0.11	18.04	0.006 ✔
T3	174 - 154	1	4.02	3.86	185.2	30.000	0.7854	0.89	23.56	0.038 ✔

Bottom Girt Design Data (Tension)

Section No.	Elevation ft	Size	L ft	L_u ft	Kl/r	F_a ksi	A in^2	Actual P K	Allow. P_a K	Ratio $\frac{P}{P_a}$
T1	199 - 189	7/8	4.00	3.88	212.6	30.000	0.6013	0.17	18.04	0.009 ✔
T2	189 - 174	7/8	4.00	3.88	212.6	30.000	0.6013	0.81	18.04	0.045 ✔
T3	174 - 154	1	4.98	4.81	230.8	30.000	0.7854	0.99	23.56	0.042 ✔

Section Capacity Table

Section No.	Elevation ft	Component Type	Size	Critical Element	P K	$SF*P_{allow}$ K	% Capacity	Pass Fail
T1	199 - 189	Leg	1 1/2	1	-1.93	48.44	4.0 4.6 (b)	Pass
T2	189 - 174	Leg	1 1/2	39	8.28	33.50	24.7	Pass
T3	174 - 154	Leg	2	87	-39.04	97.24	40.2	Pass
T4	154 - 144	Leg	Pirod 105244	153	-45.52	122.94	37.0	Pass
T5	144 - 124	Leg	Pirod 105217	162	-90.20	184.67	48.8	Pass
T6	124 - 104	Leg	Pirod 105218	177	-136.91	258.24	53.0	Pass
T7	104 - 84	Leg	Pirod 105218	192	-182.63	258.24	70.7	Pass
T8	84 - 64	Leg	Pirod 105219	207	-225.44	343.62	65.6	Pass
T9	64 - 44	Leg	Pirod 105219	222	-264.86	343.62	77.1	Pass
T10	44 - 24	Leg	Pirod 105220	237	-302.97	440.81	68.7	Pass
T11	24 - 4	Leg	Pirod 105220	252	-339.25	440.81	77.0	Pass
T1	199 - 189	Diagonal	3/4	11	-0.34	7.72	4.4	Pass
T2	189 - 174	Diagonal	3/4	46	-1.53	7.59	20.1	Pass
T3	174 - 154	Diagonal	1	97	-2.91	16.32	17.9	Pass
T4	154 - 144	Diagonal	L2 1/2x2 1/2x3/16	155	-6.26	12.14	51.6	Pass
T5	144 - 124	Diagonal	L2 1/2x2 1/2x3/16	168	-7.76	9.58	81.0	Pass
T6	124 - 104	Diagonal	L3x3x3/16	183	-9.20	13.28	69.2 70.2 (b)	Pass
T7	104 - 84	Diagonal	L3x3x3/16	198	-9.14	10.61	86.1	Pass
T8	84 - 64	Diagonal	L3x3x5/16	213	-9.42	13.81	68.2	Pass
T9	64 - 44	Diagonal	L3x3x5/16	228	-9.53	11.28	84.4	Pass
T10	44 - 24	Diagonal	L3 1/2x3 1/2x5/16	249	-10.00	16.48	60.7	Pass
T11	24 - 4	Diagonal	L3 1/2x3 1/2x5/16	264	-11.85	13.73	86.3	Pass
T1	199 - 189	Horizontal	3/4	23	-0.01	2.92	0.5	Pass
T2	189 - 174	Horizontal	3/4	52	-0.19	2.92	6.5	Pass
T3	174 - 154	Horizontal	7/8	144	-0.47	5.13	9.1	Pass
T1	199 - 189	Top Girt	7/8	6	-0.05	5.41	1.0	Pass
T2	189 - 174	Top Girt	7/8	40	-0.10	5.41	1.9	Pass
T3	174 - 154	Top Girt	1	91	-0.88	9.30	9.5	Pass
T1	199 - 189	Bottom Girt	7/8	8	-0.16	5.41	2.9	Pass
T2	189 - 174	Bottom Girt	7/8	45	-0.82	5.41	15.2	Pass
T3	174 - 154	Bottom Girt	1	93	-0.74	5.99	12.4	Pass
							Summary	
						Leg (T9)	77.1	Pass
						Diagonal (T11)	86.3	Pass
						Horizontal (T3)	9.1	Pass
						Top Girt (T3)	9.5	Pass

Section No.	Elevation ft	Component Type	Size	Critical Element	P K	$SF*P_{allow}$ K	% Capacity	Pass Fail
						Bottom Girt (T2)	15.2	Pass
						Bolt Checks	71.0	Pass
						RATING =	**86.3**	**Pass**

Program Version 6.0.0.8 - 9/7/2011 File:J:/Jobs/1500100.WI/074 - Windsor Locks NE CT/Backup Documentation/Calcs/Rev (1)/ERI Files/195 Lattice Windsor.eri

Pier and Mat Foundation Analysis:

Input Data:

Tower Data

Overturning Moment =	$OM := 5479 \cdot ft \cdot kips$	(User Input from RISATower)	
Shear Force =	$S_t := 52 \cdot kip$	(User Input from RISATower)	
Axial Force =	$WT_t := 86 \cdot kip$	(User Input from RISATower)	
Max Compression Force =	$C_t := 345 \cdot kip$	(User Input from RISATower)	
Max Uplift Force =	$U_t := 282 \cdot kip$	(User Input from RISATower)	
Tower Height =	$H_t := 195 \cdot ft$	(User Input)	
Tower Width =	$W_t := 20 \cdot ft$	(User Input)	
Tower Position on Foundation (1=offset, 2=centered) =	$Pos_t := 1$	(User Input)	

Footing Data:

Overall Depth of Footing =	$D_f := 10.0 \cdot ft$	(User Input)	
Length of Pier =	$L_p := 11.5 \cdot ft$	(User Input)	
Extension of Pier Above Grade =	$L_{pag} := 5.0 \cdot ft$	(User Input)	
Diameter of Pier =	$d_p := 5.0 \cdot ft$	(User Input)	
Thickness of Footing =	$T_f := 3.5 \cdot ft$	(User Input)	
Width of Footing =	$W_f := 29.5 \cdot ft$	(User Input)	

Material Properties:

Concrete Compressive Strength =	$f_c := 3000 \cdot psi$	(User Input)	
Steel Reinforcment Yield Strength =	$f_y := 60000 \cdot psi$	(User Input)	
Internal Friction Angle of Soil =	$\Phi_s := 30 \cdot deg$	(User Input)	
Allowable Soil Bearing Capacity =	$q_s := 4000 \cdot psf$	(User Input)	
Unit Weight of Soil =	$\gamma_{soil} := 120 \cdot pcf$	(User Input)	
Unit Weight of Concrete =	$\gamma_{conc} := 150 \cdot pcf$	(User Input)	
Foundation Bouyancy =	$Bouyancy := 0$	(User Input)	(Yes=1 / No=0)
Depth to Neglect =	$n := 0 \cdot ft$	(User Input)	
Cohesion of Clay Type Soil =	$c := 0 \cdot ksf$	(User Input)	(Use 0 for Sandy Soil)
Seismic Zone Factor =	$Z := 2$	(User Input)	(UBC-1997 Fig 23-2)
Coefficient of Friction Between Concrete =	$\mu := 0.45$	(User Input)	

Pier Reinforcement:

Bar Size =	$BS_{pier} := 8$	(User Input)	
Bar Diameter =	$d_{bpier} := 1.0 \cdot in$	(User Input)	
Number of Bars =	$NB_{pier} := 27$	(User Input)	
Clear Cover of Reinforcement =	$Cvr_{pier} := 3 \cdot in$	(User Input)	
Reinforcement Location Factor =	$\alpha_{pier} := 1.0$	(User Input)	(ACI-2008 12.2.4)
Coating Factor =	$\beta_{pier} := 1.0$	(User Input)	(ACI-2008 12.2.4)
Concrete Strength Factor =	$\lambda_{pier} := 1.0$	(User Input)	(ACI-2008 12.2.4)
Reinforcement Size Factor =	$\gamma_{pier} := 1.0$	(User Input)	(ACI-2008 12.2.4)
Diameter of Tie =	$d_{Tie} := 4 \cdot in$	(User Input)	

Pad Reinforcement:

Bar Size =	$BS_{top} := 9$	(User Input)	(Top of Pad)
Bar Diameter =	$d_{btop} := 1.125 \cdot in$	(User Input)	(Top of Pad)
Number of Bars =	$NB_{top} := 39$	(User Input)	(Top of Pad)
Bar Size =	$BS_{bot} := 9$	(User Input)	(Bottom of Pad)
Bar Diameter =	$d_{bbot} := 1.125 \cdot in$	(User Input)	(Bottom of Pad)
Number of Bars =	$NB_{bot} := 39$	(User Input)	(Bottom of Pad)
Clear Cover of Reinforcement =	$Cvr_{pad} := 3.0 \cdot in$	(User Input)	
Reinforcement Location Factor =	$\alpha_{pad} := 1.0$	(User Input)	(ACI-2008 12.2.4)
Coating Factor =	$\beta_{pad} := 1.0$	(User Input)	(ACI-2008 12.2.4)
Concrete Strength Factor =	$\lambda_{pad} := 1.0$	(User Input)	(ACI-2008 12.2.4)
Reinforcement Size Factor =	$\gamma_{pad} := 1.0$	(User Input)	(ACI-2008 12.2.4)

Calculated Factors:

Pier Reinforcement Bar Area = $A_{bpier} := \frac{\pi \cdot d_{bpier}^2}{4} = 0.785 \cdot in^2$

Pad Top Reinforcement Bar Area = $A_{btop} := \frac{\pi \cdot d_{btop}^2}{4} = 0.994 \cdot in^2$

Pad Bottom Reinforcement Bar Area = $A_{bbot} := \frac{\pi \cdot d_{bbot}^2}{4} = 0.994 \cdot in^2$

Coefficient of Lateral Soil Pressure = $K_p := \frac{1 + \sin(\Phi_s)}{1 - \sin(\Phi_s)} = 3$

Load Factor = $LF := \begin{cases} 1.333 & \text{if } H_t \le 700 \cdot ft \\ 1.7 & \text{if } H_t \ge 1200 \cdot ft \\ 1.333 + \left(\frac{H_t - 700ft}{1200ft - 700ft}\right) \cdot 0.4 & \text{otherwise} \end{cases} = 1.333$

Stability of Footing:

Adjusted Concrete Unit Weight = $\gamma_c := \text{if}(\text{Bouyancy} = 1, \gamma_{conc} - 62.4\text{pcf}, \gamma_{conc}) = 150 \cdot \text{pcf}$

Adjusted Soil Unit Weight = $\gamma_s := \text{if}(\text{Bouyancy} = 1, \gamma_{soil} - 62.4\text{pcf}, \gamma_{soil}) = 120 \cdot \text{pcf}$

Passive Pressure = $P_{pn} := K_p \cdot \gamma_s \cdot n + c \cdot 2 \cdot \sqrt{K_p} = 0 \cdot \text{ksf}$

$P_{pt} := K_p \cdot \gamma_s \cdot (D_f - T_f) + c \cdot 2 \cdot \sqrt{K_p} = 2.34 \cdot \text{ksf}$

$P_{top} := \text{if}[n < (D_f - T_f), P_{pt}, P_{pn}] = 2.34 \cdot \text{ksf}$

$P_{bot} := K_p \cdot \gamma_s \cdot D_f + c \cdot 2 \cdot \sqrt{K_p} = 3.6 \cdot \text{ksf}$

$P_{ave} := \frac{P_{top} + P_{bot}}{2} = 2.97 \cdot \text{ksf}$

$T_p := \text{if}[n < (D_f - T_f), T_f, (D_f - n)] = 3.5$

$A_p := W_f \cdot T_p = 103.25$

Ultimate Shear = $S_u := P_{ave} \cdot A_p = 306.653 \cdot \text{kip}$

Weight of Concrete Pad = $WT_{pad} := (W_f^2 \cdot T_f) \cdot \gamma_c = 456.881 \cdot \text{kip}$

Weight of Concrete Piers = $WT_{pier} := 3 \cdot \left[\left(L_p \cdot \frac{d_p^2 \cdot \pi}{4}\right) \cdot \gamma_c\right] = 101.611 \cdot \text{kip}$

Total Weight of Concrete = $WT_c := WT_{pad} + WT_{pier} = 558 \cdot \text{kip}$

Weight of Soil Above Footing = $WT_{s1} := \left(W_f^2 - 3 \cdot \frac{d_p^2 \cdot \pi}{4}\right) \cdot (L_p - L_{pag}) \cdot \gamma_s = 633 \cdot \text{kip}$

Weight of Soil Above Footing = $WT_{s2} := \left[\frac{\tan(\Phi_s) \cdot (L_p - L_{pag})^2}{2} \cdot W_f\right] \cdot \gamma_s = 43 \cdot \text{kip}$

Tower Offset = $X_{t1} := \left[\frac{W_f}{2} - \frac{(W_t \cdot \cos(30 \cdot \text{deg}))}{2}\right]$ $\quad X_{t2} := \frac{W_f}{2} - \frac{(W_t \cdot \cos(30 \cdot \text{deg}))}{3}$

$X_t := \text{if}(Pos_t, X_{t1}, X_{t2}) = 6.09$

$X_{off} := \frac{W_f}{2} - \left[\frac{(W_t \cdot \cos(30 \cdot \text{deg}))}{3} + X_t\right] = 2.887$

Resisting Moment = $M_r := (WT_c + WT_{s1}) \cdot \frac{W_f}{2} + S_u \cdot \frac{T_f}{3} + WT_{s2} \cdot \left[W_f + \frac{\tan(\Phi_s) \cdot (L_p - L_{pag})}{3}\right] = 19258 \cdot \text{ki}$

Overturning Moment = $M_{ot} := OM + S_t \cdot (L_p + T_f) = 6259 \cdot \text{kip} \cdot \text{ft}$

Factor of Safety Actual = $FS := \frac{M_r}{M_{ot}} = 3.08$

Factor of Safety Required = $FS_{req} := 2$

OverTurning_Moment_Check := if(FS ≥ FS_{req}, "Okay", "No Good")

OverTurning_Moment_Check = "Okay"

Bearing Pressure Caused by Footing:

Total Load = $Load_{tot} := WT_c + WT_{s1} + WT_t = 1277 \cdot kip$

Area of the Mat = $A_{mat} := W_f^2 = 870.25$

Section Modulus of Mat = $S := \frac{W_f^3}{6} = 4278.73 \cdot ft^3$

Maximum Pressure in Mat = $P_{max} := \frac{Load_{tot}}{A_{mat}} + \frac{M_{ot}}{S} = 2.931 \cdot ksf$

$Max_Pressure_Check := if(P_{max} < q_s, "Okay", "No Good")$

$Max_Pressure_Check = "Okay"$

Minimum Pressure in Mat = $P_{min} := \frac{Load_{tot}}{A_{mat}} - \frac{M_{ot}}{S} = 4.969 \times 10^{-3} \cdot ksf$

$Min_Pressure_Check := if[(P_{min} \geq 0) \cdot (P_{min} < q_s), "Okay", "No Good"]$

$Min_Pressure_Check = "Okay"$

Distance to Resultant of Pressure Distribution = $X_p := \frac{P_{max}}{\frac{P_{max} - P_{min}}{W_f}} \cdot \frac{1}{3} = 9.85$

Distance to Kern = $X_k := \frac{W_f}{6} = 4.917$

Since Resultant Force is Not in Kern, Area to which Pressure is Applied Must be Reduced.

Eccentricity = $e := \frac{M_{ot}}{Load_{tot}} = 4.9$

Adjusted Soil Pressure = $P_a := \frac{2 \cdot Load_{tot}}{3 \cdot W_f \cdot \left(\frac{W_f}{2} - e\right)} = 2.931 \cdot ksf$

$q_{adj} := if(P_{min} < 0, P_a, P_{max}) = 2.931 \cdot ksf$

$Pressure_Check := if(q_{adj} < q_s, "Okay", "No Good")$

$Pressure_Check = "Okay"$

Concrete Bearing Capacity:

Strength Reduction Factor = $\Phi_c := 0.65$ (ACI-2008 9.3.2.2)

Bearing Strength Between Pier and Pad = $P_b := \Phi_c \cdot 0.85 \cdot f_c \cdot \frac{\pi \cdot d_p^2}{4} = 4.686 \times 10^3 \cdot kips$ (ACI-2008 10.14)

$Bearing_Check := if(P_b > LF \cdot C_t, "Okay", "No Good")$

$Bearing_Check = "Okay"$

Shear Strength of Concrete:

Beam Shear: (Critical section located at a distance d from the face of Pier) (ACI 11.3.1.1)

$\phi_c := 0.85$ (ACI 9.3.2.5)

$d := T_f - Cvr_{pad} - d_{bbot} = 37.875 \cdot in$

$d_1 := \frac{W_f}{2} - \frac{d_p}{2}$

$d_2 := d_1 - d$

$L := \left(\frac{W_f}{2} - e\right) \cdot 3$

$Slope := if\left(L > W_f, \frac{P_{max} - P_{min}}{W_f}, \frac{q_{adj}}{L}\right)$

$V_{req} := LF \cdot \left[\left(q_{adj} - Slope \cdot d_1\right) + \left(\frac{Slope \cdot d_1}{2}\right)\right] \cdot W_f \cdot d_1 = 1.119 \times 10^3 \cdot kip$

$V_{Avail} := \phi_c \cdot 2 \cdot \sqrt{f_c \cdot psi} \cdot W_f \cdot d = 1248 \cdot kip$ (ACI-2008 11.2.1.1)

$Beam_Shear_Check := if\left(V_{req} < V_{Avail}, "Okay", "No Good"\right)$

Beam_Shear_Check = "Okay"

Punching Shear: (Critical Section Located at a distance of d/2 from the face of pier) (ACI 11.11.1.2)

Critical Perimeter of Punching Shear = $b_o := \left(d_p + d\right) \cdot \pi = 25.6$

Area Included Inside Perimeter = $A_{bo} := \frac{\pi \cdot \left(d_p + d\right)^2}{4} = 52.2$

Area Outside of Perimeter = $A_{out} := A_{mat} - A_{bo} = 818$

Guess Value = $v_u := 1ksf$ (From "Foundation Analysis and design", By Joseph Bowles, Eq. 8-9)

Given $d^2 + d_p \cdot d = \frac{Load_{tot}}{\pi \cdot v_u}$

$v_u := Find\left(v_u\right) = 1.6 \times 10^4 lbf$

$V_u := v_u \cdot d \cdot W_f = 1.5 \times 10^3 \cdot kips$

Required Shear Strength = $V_{req} := LF \cdot V_u = 2 \times 10^3 \cdot kips$

Available Shear Strength = $V_{Avail} := \phi_c \cdot 4 \cdot \sqrt{f_c \cdot psi} \cdot b_o \cdot d = 2168.8 \cdot kip$ (ACI-2008 11.11.2.1)

Punching_Shear_Check := if($V_{req} < V_{Avail}$, "Okay", "No Good")

Punching_Shear_Check = "Okay"

Steel Reinforcement in Pad:

Required Reinforcement for Bending:

Strength Reduction Factor = $\phi_m := .90$ (ACI-2008 9.3.2.1)

$$M_{nT} := LF \cdot \left[U_t \cdot \left(W_t \cdot \sin(60 \cdot deg) - \frac{d_p}{2} \right) + S_t \cdot (D_f + L_{pag}) \right] - WT_t \cdot X_{off} = 6363 \cdot ft \cdot k$$

$$M_{nS} := -1 \cdot \left[\frac{1}{2} \cdot \left(\frac{W_f}{2} + \frac{W_t}{3} \cdot \cos(30 \cdot deg) - \frac{d_p}{2} \right)^2 \cdot W_t \cdot \left[\gamma_s \cdot (T_f - T_f) \right] \right]$$

$$M_{nC} := -1 \cdot \left[\frac{1}{2} \cdot \left(\frac{W_f}{2} + \frac{W_t}{3} \cdot \cos(30 \cdot deg) - \frac{d_p}{2} \right)^2 \cdot W_t \cdot (\gamma_c \cdot T_f) \right]$$

Design Moment = $M_n := \dfrac{M_{nT} + M_{nS} + M_{nC}}{\phi_m} = 5.175 \times 10^3 \cdot kips \cdot ft$

$$\beta := \begin{cases} 0.85 & \text{if } 2500 \cdot psi \le f_c \le 4000 \cdot psi \\ 0.65 & \text{if } f_c > 8000 \cdot psi \\ \left[0.85 - \left[\dfrac{\left(\dfrac{f_c}{psi} - 4000 \right)}{1000} \right] \cdot 0.5 \right] & \text{otherwise} \end{cases} = 0.85$$

(ACI-200810.2.7.3)

$b_{eff} := W_t \cdot \cos(30 \cdot deg) + d_p = 267.846 \cdot in$

$d := T_f - Cvr_{pad} - d_{bbot} = 37.875 \cdot in$

$A_s := \dfrac{M_n}{(f_y \cdot d)} = 27.325 \cdot in^2$

$a := \dfrac{A_s \cdot f_y}{\beta \cdot f_c \cdot b_{eff}} = 2.4 \cdot in$

$A_s := \dfrac{M_n}{f_y \cdot \left(d - \dfrac{a}{2} \right)} = 28.219 \cdot in^2$

$\rho := \dfrac{A_s}{b_{eff} d} = 0.00278$

Required Reinforcement for Temperature and Shrinkage:

$$\rho_{sh} := \begin{cases} .0018 & \text{if } f_y \geq 60000 \cdot psi \\ .0020 & \text{otherwise} \end{cases} = 0.0018$$

(ACI -2008 7.12.2.1)

Check Bottom Bars:

$$As := \begin{cases} (\rho \cdot b_{eff} d) & \text{if } (\rho \cdot b_{eff} d) > \rho_{sh} \cdot \frac{b_{eff}}{2} \cdot d \\ \rho_{sh} \cdot \frac{b_{eff}}{2} \cdot d & \text{otherwise} \end{cases} = 28.219 \cdot in^2$$

$$As_{prov} := A_{bbot} \cdot NB_{bot} = 38.8 \cdot in^2$$

$$Pad_Reinforcement_Bot := if(As_{prov} > As, \text{"Okay"}, \text{"No Good"})$$

Pad_Reinforcement_Bot = "Okay"

Check top Bars:

$$As := if\left(\rho \geq \rho_{sh}, A_s, \rho_{sh} \cdot \frac{b_{eff}}{2} \cdot d\right) = 28.2 \cdot in^2$$

$$As_{prov} := A_{btop} \cdot NB_{top} = 38.8 \cdot in^2$$

$$Pad_Reinforcement_Top := if(As_{prov} > As, \text{"Okay"}, \text{"No Good"})$$

Pad_Reinforcement_Top = "Okay"

Developement Length Pad Reinforcement:

Bar Spacing =

$$B_{sPad} := \frac{W_f - 2 \cdot Cvr_{pad} - NB_{bot} \cdot d_{bbot}}{NB_{bot} - 1} = 8 \cdot in$$

Spacing or Cover Dimension =

$$c := if\left(Cvr_{pad} < \frac{B_{sPad}}{2}, Cvr_{pad}, \frac{B_{sPad}}{2}\right) = 3 \cdot in$$

Transverse Reinforcement Index =

$$k_{tr} := 0$$

(ACI-2008 12.2.3)

$$L_{dbt} := \frac{3 \cdot f_y \alpha_{pad} \cdot \beta_{pad} \cdot \gamma_{pad} \cdot \lambda_{pad}}{40 \cdot \sqrt{f_c \cdot psi} \cdot \frac{c + k_{tr}}{d_{bbot}}} \cdot d_{bbot} = 34.7 \cdot in$$

Minimum Development Length =

$$L_{dbmin} := 12 \cdot in$$

(ACI-2008 12.2.1)

$$L_{dbtCheck} := if(L_{dbt} \geq L_{dbmin}, \text{"Use L.dbt"}, \text{"Use L.dbmin"}) = \text{"Use L.dbt"}$$

Available Length in Pad =

$$L_{Pad} := \frac{W_f}{2} - \frac{W_t}{2} - Cvr_{pad} = 54 \cdot in$$

$$Lpad_Check := if(L_{Pad} > L_{dbt}, \text{"Okay"}, \text{"No Good"})$$

Lpad_Check = "Okay"

Steel Reinforcement in Pier:

Area of Pier = $A_p := \frac{\pi \cdot d_p^2}{4} = 2827.43 \cdot in^2$

$A_{smin} := 0.01 \cdot 0.5 \cdot A_p = 14.14 \cdot in^2$ (ACI-2008 10.8.4 & 10.9.1)

$A_{sprov} := NB_{pier} \cdot A_{bpier} = 21.21 \cdot in^2$

Steel_Area_Check := if($A_{sprov} > A_{smin}$, "Okay", "No Good")

Steel_Area_Check = "Okay"

Bar Spacing In Pier = $B_{sPier} := \frac{d_p \cdot \pi}{NB_{pier}} - d_{bpier} = 5.981 \cdot in$

Diameter of Reinforcement Cage = $Diam_{cage} := d_p - 2 \cdot Cvr_{pier} = 54 \cdot in$

Maximum Moment in Pier = $M_p := \left[S_t \cdot \left(L_p + \frac{A_{BP}}{2}\right)\right] \cdot LF = 9981.5 \cdot in \cdot kips$

Pier Check evaluated from outside program and results are listed below;

$$\begin{pmatrix} D & N & n & P_u & M_{xu} \end{pmatrix} := \begin{pmatrix} d_p \cdot 12 & NB_{pier} & BS_{pier} & \frac{C_t \cdot 1.333}{kips} & \frac{M_p}{in \cdot kips} \end{pmatrix}$$

$$\begin{pmatrix} D & N & n & P_u & M_{xu} \end{pmatrix} = (60 \quad 27 \quad 8 \quad 459.9 \quad 9981.5)$$

$$\begin{pmatrix} \phi P_n & \phi M_{xn} & f_{sp} & \rho \end{pmatrix} := (0 \quad 0 \quad 0 \quad 0)$$

$$\begin{pmatrix} \phi P_n & \phi M_{xn} & f_{sp} & \rho \end{pmatrix} := \phi P'_n(D, N, n, P_u, M_{xu})^T$$

$$\begin{pmatrix} \phi P_n & \phi M_{xn} & f_{sp} & \rho \end{pmatrix} = (2066.4 \quad 44849.6 \quad -60 \quad 0)$$

Axial_Load_Check := if($\phi P_n \geq P_u$, "Okay", "No Good")

Axial_Load_Check = "Okay"

Bending_Check := if($\phi M_{xn} \geq M_{xu}$, "Okay", "No Good")

Bending_Check = "Okay"

Development Length Pier Reinforcement:

Available Length in Foundation:

$L_{pier} := L_p - Cvr_{pier} = 135 \cdot in$

$L_{pad} := T_f - Cvr_{pad} = 39 \cdot in$

Tension: (ACI-2008 12.2.3)

Spacing or Cover Dimension = $c := if\left(Cvr_{pier} < \frac{B_{sPier}}{2}, Cvr_{pier}, \frac{B_{sPier}}{2}\right) = 2.991 \cdot in$

Transverse Reinforcement = $k_{tr} := 0$ (ACI-2008 12.2.3)

$$L_{dbt} := \frac{3 \cdot f_y \alpha_{pier} \cdot \beta_{pier} \cdot \gamma_{pier} \cdot \lambda_{pier}}{40 \cdot \sqrt{f_c \cdot psi} \cdot \left(\frac{c + k_{tr}}{d_{bpier}}\right)} \cdot d_{bpier} = 27.47 \cdot in$$

Minimum Development Length = $L_{dh} := \frac{1200 \cdot d_{bpier}}{\sqrt{\frac{f_c}{psi}}} \cdot .7 = 15.336 \cdot in$ (ACI 12.2.1)

Pier reinforcement bars are standard 90 degree hooks and therefore developement in the pad is computed as follows:

$L_{db} := max(L_{dbt}, L_{dbmin})$

$L_{tension_Check} := if(L_{pier} + L_{pad} > L_{dbt}, "Okay", "No Good")$

$L_{tension_Check} = "Okay"$

Compression: (ACI-2008 12.3.2)

$$L_{dbc1} := \frac{.02 \cdot d_{bpier} \cdot f_y}{\sqrt{f_c \cdot psi}} = 21.909 \cdot in$$

$$L_{dbmin} := 0.0003 \cdot \frac{in^2}{lb} \cdot (d_{bpier} \cdot f_y) = 18 \cdot in$$

$L_{dbc} := if(L_{dbc1} \geq L_{dbmin}, L_{dbc1}, L_{dbmin}) = 21.909 \cdot in$

$L_{compression_Check} := if(L_{pier} + L_{pad} > L_{dbc}, "Okay", "No Good")$

$L_{compression_Check} = "Okay"$

Tie Size and Spacing in Column:

Minimum Tie Size = $Tie_{min} := if(BS_{pier} \le 10, 3, 4) = 3$

Used #3 Ties

Seismic Factor = $z := if(Z \le 2, 1, 0.5) = 1$ (ACI-2008 21.10.5)

$s_{lim1} := 16 \cdot d_{bpier} \cdot z = 16 \cdot in$

$s_{lim2} := \frac{48 \cdot d_{Tie}}{8} \cdot z = 24 \cdot in$

$s_{lim3} := D_f \cdot z = 120 \cdot in$

$s_{lim4} := 18in$

Maximum Spacing = $s_{tie} := min\left(\begin{pmatrix} s_{lim1} \\ s_{lim2} \\ s_{lim3} \\ s_{lim4} \end{pmatrix}\right) = 16 \cdot in$

Number of Ties Required = $n_{tie} := \frac{L_{pier} - 3 \cdot in}{s_{tie}} + 1 = 9.25$

SITE NAME	WINDSOR LOCKS NE CT		ECP - CELL #	8	190
LATITUDE	41-55-41.18 N		LONGITUDE	72-38-48.38 W	
700 tilt change plus RET antenna swap outs and 40W to 60W RRH upgrades. The 60W 4 port 700 RRH will be connected to the low band ports on the AWS and PCS antenna. Please note the electrical tilt for 700 is on the SBNHH antennas			SAVE BUTTON		
			STRUCTURE TYPE	Lattice	

700 Mhz - LTE Current Config	ALPHA		BETA		GAMMA	
EQUIPMENT TYPE	eNodeB		eNodeB		eNodeB	
ANTENNA TYPE	LNX-6514DS-T4M		BXA-70063-6CF-2		BXA-70063-6CF-2	
QTY OF ANTENNAS PER FACE	1		1		1	
ORIENTATION (DEG)	30		150		270	
DOWN TILT (MECH/DEG)	3		3		3	
RAD CTR (FT AGL)	150		150		150	
TMA - QTY / MODEL						
DIPLEXER - QTY / MODEL						
MCPA BRICKS (QTY)						
RRH - QTY/MODEL						
SECTOR DISTRIBUTION BOX						
MAIN DISTRIBUTION BOX						
700 Mhz - LTE Future Config	**ALPHA**		**BETA**		**GAMMA**	
EQUIPMENT TYPE	eNodeB		eNodeB		eNodeB	
ANTENNA TYPE	LNX-6514DS-T4M		BXA-70063-6CF-2		BXA-70063-6CF-2	
QTY OF ANTENNAS PER FACE	keep as placeholder		keep as placeholder		keep as placeholder	
ORIENTATION (DEG)	30		150		270	
DOWN TILT (MECH/DEG)	6 elect		7 elect		4 elect	
RAD CTR (FT AGL)	150		150		150	
TMA - QTY / MODEL						
DIPLEXER - QTY / MODEL						
MCPA BRICKS (QTY)						
RRH - QTY/MODEL	1	ALU RH_2X60-700U	1	ALU RH_2X60-700U	1	ALU RH_2X60-700U
SECTOR DISTRIBUTION BOX						
MAIN DISTRIBUTION BOX						
850 Celluar - Current Config	**ALPHA**		**BETA**		**GAMMA**	
EQUIPMENT TYPE	Modcell 4.0B		Modcell 4.0B		Modcell 4.0B	
ANTENNA TYPE	BXA-70063-6CF-5		BXA-70063-6CF-5		BXA-70063-6CF-5	
QTY OF ANTENNAS PER FACE	1		1		1	
ORIENTATION (DEG)	30		150		270	
DOWN TILT (MECH/DEG)	3		3		3	
RAD CTR (FT AGL)	150		150		150	
TMA - QTY / MODEL						
DIPLEXER - QTY / MODEL	2	FD9R6004/2C-3L	2	FD9R6004/2C-3L	2	FD9R6004/2C-3L
DIPLEX WITH LTE CABLE						
MCPA BRICKS (QTY)						
850 Celluar - Future Config	**ALPHA**		**BETA**		**GAMMA**	
EQUIPMENT TYPE	Modcell 4.0B		Modcell 4.0B		Modcell 4.0B	
ANTENNA TYPE	BXA-70063-6CF-5		BXA-70063-6CF-5		BXA-70063-6CF-5	
QTY OF ANTENNAS PER FACE	1		1		1	
ORIENTATION (DEG)	30		150		270	
DOWN TILT (MECH/DEG)	3		3		3	
RAD CTR (FT AGL)	150		150		150	
TMA - QTY / MODEL						
DIPLEXER - QTY / MODEL	2	FD9R6004/2C-3L	2	FD9R6004/2C-3L	2	FD9R6004/2C-3L
DIPLEX WITH LTE CABLE						
MCPA BRICKS (QTY)						
1900 PCS - Current Config	**ALPHA**		**BETA**		**GAMMA**	
EQUIPMENT TYPE	PCS Modcell 4.0B		PCS Modcell 4.0B		PCS Modcell 4.0B	
ANTENNA TYPE	BXA-185060-12CF-2		BXA-185060-12CF-2		BXA-185060-12CF-2	
QTY OF ANTENNAS PER FACE	1		1		1	
ORIENTATION (DEG)	30		150		270	
DOWN TILT (MECH/DEG)	2		2		2	
RAD CTR (FT AGL)	150		150		150	
TMA - QTY / MODEL						
DIPLEXER - QTY / MODEL						
DIPLEX WITH CELLULAR CABLE	DIPLEX with Cellular Cable		DIPLEX with Cellular Cable		DIPLEX with Cellular Cable	
MCPA BRICKS (QTY)						

1900 PCS - Future Config	ALPHA		BETA		GAMMA	
EQUIPMENT TYPE	PCS Modcell 4.0B		PCS Modcell 4.0B		PCS Modcell 4.0B	
ANTENNA TYPE	SBNHH-1D65B		SBNHH-1D65B		SBNHH-1D65B	
QTY OF ANTENNAS PER FACE	1		1		1	
ORIENTATION (DEG)	30		150		270	
DOWN TILT (MECH/DEG)	4 elect		4 elect		4 elect	
RAD CTR (FT AGL)	150		150		150	
TMA - QTY / MODEL						
DIPLEXER - QTY / MODEL						
DIPLEX WITH CELLULAR CABLE	DIPLEX with Cellular Cable		DIPLEX with Cellular Cable		DIPLEX with Cellular Cable	
MCPA BRICKS (QTY)						
RRH - QTY/MODEL	1	ALU RH_2X60-PCS	1	ALU RH_2X60-PCS	1	ALU RH_2X60-PCS
SECTOR DISTRIBUTION BOX						
MAIN DISTRIBUTION BOX						
AWS - LTE ANTENNA ADD	**ALPHA**		**BETA**		**GAMMA**	
EQUIPMENT TYPE	2100 MHz BBU		2100 MHz BBU		2100 MHz BBU	
ANTENNA TYPE	BXA-171063-12CF-EDIN-5		BXA-171063-12CF-EDIN-5		BXA-171063-12CF-EDIN-5	
QTY OF ANTENNAS PER FACE	1		1		1	
ORIENTATION (DEG)	30		150		270	
DOWN TILT (MECH/DEG)	4		4		4	
RAD CTR (FT AGL)	150		150		150	
TMA - QTY / MODEL						
DIPLEXER - QTY / MODEL						
RRH - QTY/MODEL	1	ALU RH_2X40-AWS	1	ALU RH_2X40-AWS	1	ALU RH_2X40-AWS
SECTOR DISTRIBUTION BOX						
MAIN DISTRIBUTION BOX	1				DB-T1-6Z-8AB-0Z	
AWS - LTE ANTENNA ADD	**ALPHA**		**BETA**		**GAMMA**	
EQUIPMENT TYPE	2100 MHz BBU		2100 MHz BBU		2100 MHz BBU	
ANTENNA TYPE	SBNHH-1D65B		SBNHH-1D65B		SBNHH-1D65B	
QTY OF ANTENNAS PER FACE	1		1		1	
ORIENTATION (DEG)	30		150		270	
DOWN TILT (MECH/DEG)	3 elect		3 elect		3 elect	
RAD CTR (FT AGL)	150		150		150	
TMA - QTY / MODEL						
DIPLEXER - QTY / MODEL						
RRH - QTY/MODEL	1	ALU RH_2X60-AWS	1	ALU RH_2X60-AWS	1	ALU RH_2X60-AWS
SECTOR DISTRIBUTION BOX						
MAIN DISTRIBUTION BOX	1				DB-T1-6Z-8AB-0Z	

NUMBER OF CABLE'S NEEDED						ESTIMATED CABLE LENGTH			
MAINLINE SIZE	1 5/8"	TOTAL # OF MAINLINES			12	MAINLINE (FT)			
JUMPER SIZE	1/2 "	TOTAL # OF TOP JUMPERS			18	TOP JUMPER (FT)			12
Equipment Cable Ordering		**MAIN CABLE**	12	+	0	**TOP JUMPER #**	12	+	6
FIBER LINE SIZE	1 5/8"	TOTAL # OF FIBER LINES			2	FIBER LINE MODEL #			HB158-1-08U8-S8J18
JUMPER SIZE	5/8"	TOTAL # OF TOP JUMPERS			9	TOP JUMPER MODEL #			HB058-1-08U1-S1J18
Fiber Cable Ordering		**FIBER CABLE**	1	+	1	**TOP JUMPER #**	3	+	6

TX / RX FREQUENCIES			TX POWER OUTPUT	
Cellular A-Band	**PCS F-Band**	**700 Mhz C - B**	Cellular (Watts)	20
TX - 869-880,890-891.5 MHz	TX - 1970-1975	TX - 746-757	PCS (Watts)	16
RX - 824-835,845-846.5 MHz	RX - 1890-1895	RX - 776-787	LTE (Watts)	40

ALPHA				BETA				GAMMA			
Ant.	Freq.	Func.	Color Code	Ant.	Freq.	Func.	Color Code	Ant.	Freq.	Func.	Color Code
A1-A	800	Tx1/Rx0	RED	A5-A	800	Tx2/Rx0	BLUE	A9-A	800	Tx3/Rx0	GREEN
A1-B	1900	Tx1/Rx0	RED/ WHITE	A5-B	1900	Tx2/Rx0	BLUE/ WHITE	A9-B	1900	Tx3/Rx0	GREEN/WHITE
A2	700	Tx1/Rx0	RED/ ORANGE	A6	700	Tx2/Rx0	BLUE/ ORANGE	A10	700	Tx3/Rx0	GREEN/ORANGE
A3	700	Tx4/Rx1	RED/RED/ ORANGE	A7	700	Tx5/Rx1	BLUE/BLUE/ ORANGE	A11	700	Tx6/Rx1	GREEN/GREEN/ ORANGE
A4-B	1900	Tx4/Rx1	RED/RED/ WHITE	A8-B	1900	Tx5/Rx1	BLUE/BLUE/ WHITE	A12-B	1900	Tx6/Rx1	GREEN/GREEN/ WHITE
A4-A	800	Tx4/Rx1	RED/RED	A8-A	800	Tx5/Rx1	BLUE/BLUE	A12-A	800	Tx6/Rx1	GREEN/GREEN

RF ENGINEER	RF MANAGER	INITIALS	DATE
Prepared By : Mark Brauer	Robert Hesselbach	MB	4/8/2015

Product Specifications

COMMSCOPE®

POWERED BY ANDREW.

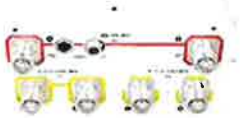

SBNHH-1D65B

Andrew® Tri-band Antenna, 698–896 and 2 x 1710–2360 MHz, 65° horizontal beamwidth, internal RET. Both high bands share the same electrical tilt.

- Interleaved dipole technology providing for attractive, low wind load mechanical package

Electrical Specifications

Frequency Band, MHz	698–806	806–896	1710–1880	1850–1990	1920–2180	2300–2360
Gain, dBi	14.9	14.7	17.7	18.2	18.6	18.6
Beamwidth, Horizontal, degrees	68	66	69	66	63	58
Beamwidth, Vertical, degrees	12.1	10.7	5.6	5.2	5.0	4.5
Beam Tilt, degrees	0–14	0–14	0–7	0–7	0–7	0–7
USLS, dB	14	13	15	15	15	13
Front-to-Back Ratio at 180°, dB	27	29	28	28	28	27
CPR at Boresight, dB	20	23	20	20	17	21
CPR at Sector, dB	14	10	12	10	9	1
Isolation, dB	25	25	25	25	25	25
Isolation, Intersystem, dB	30	30	30	30	30	30
VSWR | Return Loss, dB	1.5 | 14.0	1.5 | 14.0	1.5 | 14.0	1.5 | 14.0	1.5 | 14.0	1.5 | 14.0
PIM, 3rd Order, 2 x 20 W, dBc	-153	-153	-153	-153	-153	-153
Input Power per Port, maximum, watts	350	350	350	350	350	300
Polarization	±45°	±45°	±45°	±45°	±45°	±45°
Impedance	50 ohm	50 ohm	50 ohm	50 ohm	50 ohm	50 ohm

Electrical Specifications, BASTA*

Frequency Band, MHz	698–806	806–896	1710–1880	1850–1990	1920–2180	2300–2360
Gain by all Beam Tilts, average, dBi	14.5	14.3	17.4	17.9	18.2	18.3
Gain by all Beam Tilts Tolerance, dB	±0.5	±0.8	±0.4	±0.3	±0.5	±0.3
Gain by Beam Tilt, average, dBi	0 ° | 14.6	0 ° | 14.5	0 ° | 17.4	0 ° | 17.8	0 ° | 18.1	0 ° | 18.2
	7 ° | 14.6	7 ° | 14.4	3 ° | 17.5	3 ° | 17.9	3 ° | 18.3	3 ° | 18.4
	14 ° | 14.2	14 ° | 13.6	7 ° | 17.4	7 ° | 17.9	7 ° | 18.2	7 ° | 18.4
Beamwidth, Horizontal Tolerance, degrees	±2.2	±3.4	±2	±4.6	±5.7	±4.3
Beamwidth, Vertical Tolerance, degrees	±0.8	±1	±0.3	±0.2	±0.3	±0.2
USLS, dB	16	14	16	16	16	15
Front-to-Back Total Power at 180° ± 30°, dB	25	26	27	26	26	26
CPR at Boresight, dB	22	23	21	20	20	22
CPR at Sector, dB	13	11	16	12	11	4

* CommScope® supports NGMN recommendations on Base Station Antenna Standards (BASTA). To learn more about the benefits of BASTA, download the whitepaper Time to Raise the Bar on BSAs.

General Specifications

Antenna Brand	Andrew®
Antenna Type	DualPol® multiband with internal RET
Band	Multiband
Brand	DualPol® | Teletilt®
Operating Frequency Band	1710 – 2360 MHz | 698 – 896 MHz

Mechanical Specifications

©2015 CommScope, Inc. All rights reserved. All trademarks identified by ® or ™ are registered trademarks, respectively, of CommScope.
All specifications are subject to change without notice. See www.commscope.com for the most current information. Revised: February 19, 2015

Product Specifications

COMMSCOPE®

SBNHH-1D65B

POWERED BY ANDREW.

Color	Light gray
Lightning Protection	dc Ground
Radiator Material	Aluminum | Low loss circuit board
Radome Material	Fiberglass, UV resistant
Reflector Material	Aluminum
RF Connector Interface	7-16 DIN Female
RF Connector Location	Bottom
RF Connector Quantity, total	6
Wind Loading, maximum	617.7 N @ 150 km/h 138.9 lbf @ 150 km/h
Wind Speed, maximum	241.4 km/h | 150.0 mph

Dimensions

Depth	181.0 mm | 7.1 in
Length	1828.0 mm | 72.0 in
Width	301.0 mm | 11.9 in
Net Weight	18.4 kg | 40.6 lb

Remote Electrical Tilt (RET) Information

Input Voltage	10–30 Vdc
Power Consumption, idle state, maximum	2.0 W
Power Consumption, normal conditions, maximum	13.0 W
Protocol	3GPP/AISG 2.0 (Multi-RET)
RET Interface	8-pin DIN Female | 8-pin DIN Male
RET Interface, quantity	1 female | 1 male
RET System	Teletilt®

Regulatory Compliance/Certifications

Agency	Classification
RoHS 2011/65/EU	Compliant by Exemption
China RoHS SJ/T 11364-2006	Above Maximum Concentration Value (MCV)
ISO 9001:2008	Designed, manufactured and/or distributed under this quality management system

Included Products

BSAMNT-1 — Wide Profile Antenna Downtilt Mounting Kit for 2.4 - 4.5 in (60 - 115 mm) OD round members. Kit contains one scissor top bracket set and one bottom bracket set.

©2015 CommScope, Inc. All rights reserved. All trademarks identified by ® or ™ are registered trademarks, respectively, of CommScope.
All specifications are subject to change without notice. See www.commscope.com for the most current information. Revised: February 19, 2015

ALCATEL-LUCENT B13 RRH4X30-4R

Alcatel-Lucent B13 Remote Radio Head 4x30-4R is the newest addition of Remote Radio Head to the extended product line of Alcatel-Lucent's distributed Base Station solutions, aimed at facilitating smooth RF site acquisition and related civil engineering.

Supporting 2Tx/4Tx MIMO and 4-way Rx diversity, Alcatel-Lucent B13 RRH4x30-4R allows operators to have a compact radio solution to deploy LTE in the 700U band (700 MHz, 3GPP band 13), providing them with the means to achieve high capacity, high quality and high coverage with minimum site requirements.

The Alcatel-Lucent B13 RRH4x30-4R product has four transmit RF paths, offering the possibility to **select, via software only, 2Tx or 4Tx MIMO configurations** with either 2x60 W or 4x30 W RF output power. It supports also 4-way Rx diversity and up to 10MHz instantaneous bandwidth.

The Alcatel-Lucent B13 RRH4x30-4R is a near zero-footprint solution and operates noise free, simplifying negotiations with site property owners and minimizing environmental impacts.

Its compactness and slim design makes the Alcatel-Lucent B13 RRH4x30-4R easy to install close to the antenna: operators can therefore locate this Remote Radio Head where RF design conditions are deemed ideal, minimizing trade-offs between available sites and RF optimum sites, together with reducing the RF feeder needs and installation costs.

FEATURES

- Supporting LTE in 700 MHz band (700U, 3GPP band 13)
- LTE 2Tx or 4Tx MIMO (SW switchable)
- Output power: Up to 2x60W or 4x30W
- 10MHz LTE carrier with 4Rx Diversity
- Convection-cooled (fan-less)
- Supports AISG 2.0 ALD devices (RET, TMA) through RS485 or RF ports

BENEFITS

- Compact to reduce additional footprint when adding LTE in 700U band
- MIMO scheme operation selection (2Tx or 4Tx) by software only
- Improves downlink spectral efficiency through MIMO4
- Increases LTE coverage thanks to 4Rx diversity capability and best in class Rx sensitivity
- Flexible mounting options: Pole or Wall

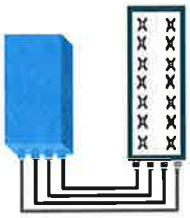

4x30W with 4T4R
or
2x60W with 2T4R

Can be switched between modes via SW w/o site visit

TECHNICAL SPECIFICATIONS

Features & performance	
Number of TX/RX paths	4 duplexed (either 4T4R or 2T4R by SW)
Frequency band	U700 (C) (3GPP bands 13): DL: 746 - 756 MHz / UL: 777 - 787 MHz
Instantaneous bandwidth - #carriers	10MHz – 1 LTE carrier (in 10MHz occupied bandwidth)
LTE carrier bandwidth	10 MHz
RF output power	2x60W or 4x30W (by SW)
Noise figure – RX Diversity scheme	2 dB typ. (<2.5 dB max) – 2 or 4 way Rx diversity
Sizes (HxWxD) in mm (in.) **Volume in L** **Weight in kg (lb) (w/o mounting HW)**	550 x 305 x 230 (21.6" x 12.0" x 9") (with solar shield) 38 (with solar shield) 26 (57.2) (with solar shield)
DC voltage range **DC power consumption**	-40.5 to -57V at full performance, -38 to -57V with relaxation on power consumption 550W typical @100% RF load (in 2Tx or 4TX mode)
Environmental conditions **Wind load (@150km/h or 93mph)**	-40°C (-40°F) /+55°C (+131°F) IP65 Frontal:<200N / Lateral :<150N
Antenna ports	4 ports 7/16 DIN female (50 ohms) VSWR < 1.5
CPRI ports	2 CPRI ports (HW ready for Rate7, 9.8 Gbps) SFP single mode dual fiber
AISG interfaces	1 AISG2.0 output (RS485) Integrated Smart Bias Tees (x2)
Misc. Interfaces	4 external alarms (1 connector) – 4 RF Tx & 4 RF Rx monitor ports - 1 DC connector (2 pins)
Installation conditions	Pole and wall mounting
Regulatory compliance	3GPP 36.141 / 3GPP 36.113 / GR-1089-CORE / GR-3108-CORE / UL 60950-1 / FCC Part 27

www.alcatel-lucent.com Alcatel, Lucent, Alcatel-Lucent and the Alcatel-Lucent logo are trademarks of Alcatel-Lucent. All other trademarks are the property of their respective owners. The information presented is subject to change without notice. Alcatel-Lucent assumes no responsibility for inaccuracies contained herein.
Copyright © 2014 Alcatel-Lucent. All Rights Reserved

NEW PCS RF MODULES FOR VZW
RRH2X60 - HW CHARACTERISTICS

LR14.3

	RRH2x60
RF Output Power	2x60W (4x30W HW Ready)
Instantaneous Bandwidth	60MHz
Target Reliability (Annual Return Rate)	<2%
Receiver	4 Branch Rx
Features	AISG 2.0 for RET/TMA
Power	-48VDC
	Internal Smart Bias-T
CPRI Ports	2 CPRI Rate 5 Ports
External Alarms	4 External User Alarms
Monitor Ports	TX, RX
Environmental	GR487 Compliance
RF Connectors	7/16 DIN (downward facing)
Dimensions	22"(h) x 12"(w)x 9.4" (d)**
Weight	55lb**

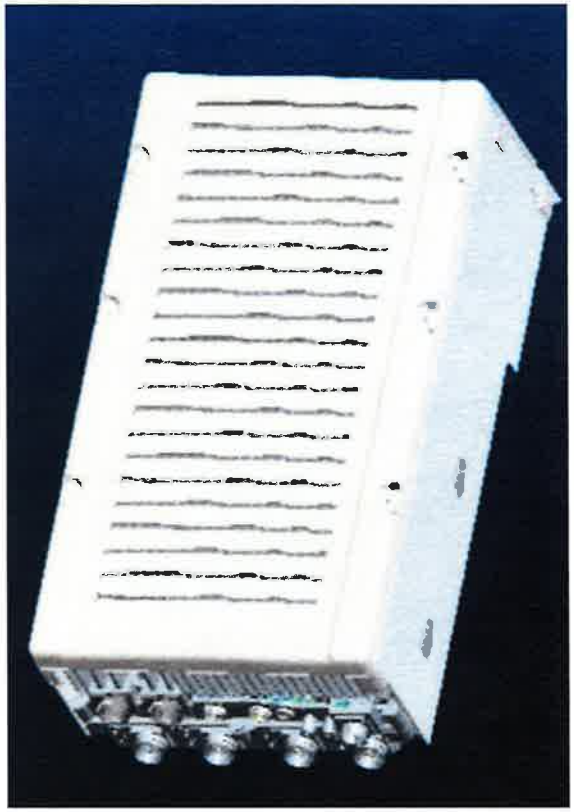

**- Includes solar shield but not mounting brackets (8 lbs.)

Alcatel·Lucent

COPYRIGHT © 2014 ALCATEL-LUCENT. ALL RIGHTS RESERVED.
ALCATEL-LUCENT – CONFIDENTIAL – SOLELY FOR AUTHORIZED PERSONS HAVING A NEED TO KNOW – PROPRIETARY – USE PURSUANT TO COMPANY INSTRUCTION

VZW Network Equipment Reporting Form (NERF)

Vendor	Alcatel-Lucent		Model	B66a RRH 4Tx/4Rx 4x45W or 2x 90W (SW selectable)		Function	RRH for distributed architecture with a CPRI interface between digital and RF processing components. The RRH has 4 Tx ports and 4 Rx ports. Can be SW configured for 2 Tx with 90W rf per port or 4 Tx with 45W rf per port. The RRH has passive cooling only.		
*1)Equipment Configuration	*2)Heat Release @50°F Intake Temp [W]		*3)Airflow Rate @ 100% Activity Rate [cfm]		*4)Dimensions [in]		Non-Thermal Data		
	100% Activity	50% Activity	Nominal (70°F)	Max (95°F)	External (WxDxH)	Clear (F/R/S)	Installed Weight [lb]	*5)Sound @ Nominal [L_{WAd}]	*6)Name Plate [W]
Minimum			N/A Convection cooled	N/A Convection cooled	w/o Solar Shield W = 11.4in D = 6.7in H = 25.2in (W=290mm) (D=170mm) (H=640mm)	Front: 12" Rear: 7.5" Right: 12" Left: 12" Top: 12" Bottom: 24"			
Typical			N/A Convection cooled	N/A Convection cooled	with Solar Shield W = 12in D = 7.6in H = 25.8in (W=304mm) (D=193mm) (H=655mm)		62lb 72 lb(w mounting brackets)	N/A Convection cooled	
Full	825W (add 60W for AISG)	TBD	N/A Convection cooled	N/A Convection cooled	N/A			N/A Convection cooled	

*7)Equipment EC-Class	N/A Convection cooled	*10)Fan Speed	N/A Convection cooled	*13)Fan Hot-Swap	N/A Convection cooled	*16)Environ. Tests	N/A Convection cooled	*18)Temp. Rise [°F]	N/A Convection cooled
*8)Non-Optimal EC-Class	N/A Convection cooled	*11)Fan Logic	N/A Convection cooled	*14)Shut-Down	N/A Convection cooled	*17)Allow. Max [°F]	N/A Convection cooled	*19)Rec. Max [°F]	N/A Convection cooled
*9)Exhaust Openings	N/A Convection cooled	*12)Fan Alarm	N/A Convection cooled	*15)Temp. Access	N/A Convection cooled	*17)Allow. Min [°F]	N/A Convection cooled	*19)Rec. Min [°F]	N/A Convection cooled

Power Reporting					
Power Input	-48V	No. Power Supplies	N/A (Customer provided power plant)	Number of Inputs per Power Supply	1
*24)Maximum Demand (total system in Watts)	825W (add 60W for AISG)	Maximum Input (each power supply in Watts)	N/A (Customer provided power plant)	Maximum Output (each power supply in Watts)	58W (to AISG port, 29V/2A)
Power Supply Connection Type	DC entry via Conduit Box	Power Supply Make & Model	N/A (Customer provided power plant)		
Input Protection	no input fuse	Input Protection Make & Model	N/A (Customer provided power plant)		
Redundancy Scheme	N/A				
Nominal Voltage	-48VDC	Maximum Voltage	-57V	Minimum Voltage	-38V
*25)Max Current at Nominal Voltage	17.2A (add 1.2A if AISG port loaded 2A*29V)	*25)Max Current at Maximum Voltage	14.5A (add 1A if AISG port loaded 2A*29V)	*25)Max Current at Minimum Voltage	21.7A (add 1.5A if AISG port loaded 2A*29V)

Return completed forms to Engineering and Operations Support (EOS)
Richard.damiano@verizonwireless.com

Product Data Sheet DB-B1 and DB-T1 Series

DC and Fiber Management Distribution Boxes for HYBRIFLEX™ Cable

Product Description

The RFS Distribution Box design comes with the option for pluggable over voltage protection (OVP) for up to 6 remote radios and the connection for 6 pairs of optical fiber with LC optical fiber cable management. There is a hybrid cable input with a jumper configuration for power and optical fiber to the remote radio heads (RRHs). A custom wall, a 2-inch pole, and an H-Frame mounting bracket are included. Both the compact and standard design are available with lightening protection.

Features/Benefits

- Designed to accommodate varying diameters of HYBRIFLEX™ (combined power and fiber optic) cables – up to 2 inches
- Supports Single- and Multi-Mode Optical fiber
- NEMA 4x rated enclosure – allows **flexibility for indoor or outdoor installation** on a roof or tower top
- Weatherproof enclosure and ports – **improves system reliability**
- Modular design – makes replacement or addition of OVP easy without removal of other components within the box
- Strikesorb OVP technology – protects equipment from damaging surges up to 60 kA on an 8/20 waveform and up to 5 kA on a 10/350 waveform (certain models only)
- Low residual voltage and high impedance – **ideally suited for RRH technology** – won't shut down the RRH the way spark gap technology does (certain models only)

Technical Specifications

Mechanical Specifications

Model Number	DB-B1-6C-8AB-0Z	DB-T1-6Z-8AB-0Z
Enclosure Design	Standard, 6 OVP's	Standard without OVP
Dimensions - H x W x D, mm (in)	610 x 610 x 254 (24 x 24 x 10)	610 x 610 x 254 (24 x 24 x 10)
Weight, kg (lb)	20 (44)	20 (44)
Suppression Connection Method	Compression lug, #2-#14 AWG Copper, #2-#12 Aluminum	
Fiber Connection Method	LC-LC Single- or Multi-mode duplex	
Environmental Rating	NEMA 4x	
Operating Temperature, °C (°F)	-40 to +80 (-40 to +176)	
UV Protection	ISO 4892-2 Method A Xenon-Arc 2160 hrs	

Electrical Specifications

Nominal Operating Voltage	48 VDC	
Nominal Discharge Current (I_n) per UL 1449 3rd Ed	20 kA 8/20 µs	N/A
Maximum Discharge Current (I_{max}) per NEMA LS-1	60 kA 8/20 µs	N/A
Maximum Impulse (Lightning) Current (I_{imp}) per IEC 61643-1	5 kA 10/350 µs	N/A
Maximum Continuous Operating Voltage (U_c)	75 VDC	N/A
Voltage Protection Rating per UL1449 3rd Ed	400 V	N/A
Protection Class as per IEC 61643-1	Class 1	N/A
Strikesorb OVP Compliance	ANSI/UL 1449-3rd Ed	N/A
	IEEE C62.41	N/A
	NEMA LS-1	N/A
	IEC 61643-1	N/A
	IEC 61643-12	N/A
	EN 61643-11	N/A

* This data is provisional and subject to change.

All information contained in the present datasheet is subject to confirmation at time of ordering.

Windsor Locks CT-318

Last Updated 2/5/2015

Height	Load/Antennas	Load/Antenna Qty	Coax Size	Coax Qty	Azimuth	Ownership	Mount	Status
200'	Beacon	1	1" Conduit	1	Top	MCM	Center Plate	Active
195'	20' 4-Bay Dipole	1	7/8"	1	SE	Windsor Locks PS	Leg	Active
176'	20' 4-Bay Dipole	2	7/8"	2	N	Windsor Locks PS	15' T-Frame	Active
176'	20' Omni Whip	1	7/8"	1	N	Windsor Locks PS	15' T-Frame	Active
176'	10' Omni Whip	1	7/8"	1	SE	Windsor Locks PS	15' T-Frame	Active
176'	12' Omni Whip	1	7/8"	1	SE	Windsor Locks PS	15' T-Frame	Active
176'	20' 4-Bay Dipole	2	7/8"	2	SW	Windsor Locks PS	15' T-Frame	Active
176'	20' Omni Whip	1	7/8"	1	SW	Windsor Locks PS	15' T-Frame	Active
165'	Kathrein 800-10121	1	1-5/8"	1	0	AT&T	15' T-Frame	Active
165'	Powerwave LGP21401 TMA	2	1-5/8"	1	0	AT&T	15' T-Frame	Active
165'	Andrew SBNH-1D6565C	1	1-5/8"	1	0	AT&T	15' T-Frame	Active
165'	Ericsson RRU-11	2				AT&T	15' T-Frame	Active
165'	Kathrein 800-10121	1	1-5/8"	1	120	AT&T	15' T-Frame	Active
165'	Powerwave LGP21401 TMA	2	1-5/8"	1	120	AT&T	15' T-Frame	Active
165'	Andrew SBNH-1D6565C	1	1-5/8"	1	120	AT&T	15' T-Frame	Active
165'	Ericsson RRU-11	2				AT&T	15' T-Frame	Active
165'	Kathrein 800-10121	1	1-5/8"	1	240	AT&T	15' T-Frame	Active
165'	Powerwave LGP21401 TMA	2	1-5/8"	1	240	AT&T	15' T-Frame	Active
165'	Andrew SBNH-1D6565C	1	1-5/8"	1	240	AT&T	15' T-Frame	Active
165'	Ericsson RRU-11	2	DC Power/Fiber	1		AT&T	15' T-Frame	Active
165'	Raycap DC6-48-60-18-8F SA	1				AT&T	15' T-Frame	Active
150'	Amphenol BXA-185060/12CF	3	1-5/8"	3	30-150-270	Verizon	15' T-Frame	Active
150'	Amphenol BXA-70063-6CF	5	1-5/8"	5	30-150-270	Verizon	15' T-Frame	Active
150'	Amphenol 171063/12CF	3	1-5/8"	3	30-150-270	Verizon	15' T-Frame	Active
150'	Amphenol LNX 6514DS/T4M	1	1-5/8"	1	30-150-270	Verizon	15' T-Frame	Active
150'	RFS FD9R6005/2C-3L Diplexers	6			30-150-270	Verizon	15' T-Frame	Active
150'	ALU RRH 2X40AWS	3	Fiber	1	30-150-270	Verizon	15' T-Frame	Active
150'	DB-T1-6Z-8AB-OZ Dist Box	1				Verizon	15' T-Frame	Active
140'	CommScope LNX-6515DS-VTM	1	1-5/8"	3	30	T-Mobile	15' T-Frame	Active
140'	Ericsson KRY 112 15 TMA	4	1-5/8"		30	T-Mobile	15' T-Frame	Active
140'	CommScope LNX-6515DS-VTM	1	1-5/8"	3	150	T-Mobile	15' T-Frame	Active
140'	Ericsson KRY 112 15 TMA	4	1-5/8"		150	T-Mobile	15' T-Frame	Active
140'	CommScope LNX-6515DS-VTM	1	1-5/8"		270	T-Mobile	15' T-Frame	Active
140'	Ericsson KRY 112 15 TMA	4	1-5/8"		270	T-Mobile	15' T-Frame	Active
140'	RFS APX16DWV-16DWV	1	1-5/8"	3	30	T-Mobile	15' T-Frame	Active
140'	EMS RR90-17-02DP	1	1-5/8"	3	30	T-Mobile	15' T-Frame	Active
140'	RFS APX16DWV-16DWV	1	1-5/8"	3	150	T-Mobile	15' T-Frame	Active
140'	EMS RR90-17-02DP	1	1-5/8"	3	150	T-Mobile	15' T-Frame	Active
140'	RFS APX16DWV-16DWV	1	1-5/8"		270	T-Mobile	15' T-Frame	Active
140'	EMS RR90-17-02DP	1	1-5/8"		270	T-Mobile	15' T-Frame	Active
130'	RFS APXV18-206517S-C	1	1-5/8"	2	30	MetroPCS	Flush Mount	Active
130'	RFS APXV18-206517S-C	1	1-5/8"	2	150	MetroPCS	Flush Mount	Active
130'	RFS APXV18-206517S-C	1	1-5/8"	2	270	MetroPCS	Flush Mount	Active
119'	RFS APXVSPP18-C-A20	1	1-1/4" Hybriflex	1	90	Sprint	15' T-Frame	Active
119'	RFS APXVSPP18-C-A20	1	1-1/4" Hybriflex	1	90	Sprint	15' T-Frame	Active
119'	RFS APXVSPP18-C-A20	1	1-1/4" Hybriflex	1	230	Sprint	15' T-Frame	Active
119'	RFS APXVTM14-C-120	1	1-1/4" Hybriflex	1	230	Sprint	15' T-Frame	Active
119'	RFS APXVTM14-C-120	1			330	Sprint	15' T-Frame	Active
119'	RFS APXVTM14-C-120	1			330	Sprint	15' T-Frame	Active
119'	800 MHz RRU	3				Sprint	15' T-Frame	Active
119'	1900 MHz RRU	3				Sprint	15' T-Frame	Active
119'	ALU TD-RRH 8x20-25	3				Sprint	15' T-Frame	Active

Height	Load/Antennas	Load/Antenna Qty	Coax Size	Coax Qty	Azimuth	Ownership	Mount	Status
109'	Argus LLPX310R	1	5/16"	2	30	Clearwire	T-Frame	Active
109'	Samsung FDD-01 RRH	1	5/8"	2	30	Clearwire	T-Frame	Active
109'	Andrew VHLP2-11 MW	1	1/2"	1	30	Clearwire	T-Frame	Active
109'	Argus LLPX310R	1	5/16"	2	150	Clearwire	T-Frame	Active
109'	Samsung FDD-01 RRH	1	5/8"	2	150	Clearwire	T-Frame	Active
109'	Andrew VHLP2-23 MW	1	1/2"	1	150	Clearwire	T-Frame	Active
109'	Argus LLPX310R	1	5/16"	2	270	Clearwire	T-Frame	Active
109'	Samsung FDD-01 RRH	1	5/8"	2	270	Clearwire	T-Frame	Active
109'	Andrew VHLP2-23 MW	1	1/2"	1	270	Clearwire	T-Frame	Active
99'	Side Marker Beacons	3	1/2 "	3		MCM		Active
78'	GPS	1	1/2 "	1		Sprint	1' Sidearm	Active