ROBINSON & COLE LLP

KENNETH C. BALDWIN

280 Trumbull Street
Hartford, CT 06103-3597
Main (860) 275-8200
Fax (860) 275-8299
kbaldwin@rc.com
Direct (860) 275-8345

Also admitted in Massachusetts

June 16, 2014

Melanie A. Bachman
Acting Executive Director
Connecticut Siting Council
10 Franklin Square
New Britain, CT 06051

Re: **Notice of Exempt Modification – Facility Modification**
175 Roberts Road, Groton, Connecticut

Dear Ms. Bachman:

Cellco Partnership d/b/a Verizon Wireless ("Cellco") currently maintains twelve (12) wireless telecommunications antennas at the 137-foot level on an existing 145-foot tower at 75 Roberts Road, Groton, Connecticut (the "Property"). The tower is owned by Crown Castle. Cellco's use of the tower was approved by the Council in 2007. Cellco now intends to modify its facility by removing six (6) 850 MHz antennas, replacing them with three (3) model LNX-6512DS-VTM, 850 MHz antennas, and three (3) model HBXX-6517DS-VTM, 2100 MHz antennas, all at the 137-foot level on the tower. Cellco also intends to install three (3) remote radio heads ("RRHs") behind its new 2100 MHz antennas and one (1) HYBRIFLEX™ antenna cable attached to the outside of the monopole. Included in Attachment 1 are specifications for Cellco's replacement antenna, RRHs and HYBRIFLEX™ cable.

Please accept this letter as notification pursuant to R.C.S.A. § 16-50j-73, for construction that constitutes an exempt modification pursuant to R.C.S.A. § 16-50j-72(b)(2). In accordance with R.C.S.A. § 16-50j-73, a copy of this letter is being sent to Mark R. Oefinger, Town Manager of the Town of Groton. A copy of this letter is also being sent to Philip A. Strickland and Daniel J. Perrotta, the owners of the Property.

The planned modifications to the facility fall squarely within those activities explicitly provided for in R.C.S.A. § 16-50j-72(b)(2).

Law Offices
BOSTON
HARTFORD
NEW YORK
PROVIDENCE
STAMFORD
ALBANY
LOS ANGELES
NEW LONDON
SARASOTA
www.rc.com

1. The proposed modifications will not result in an increase in the height of the existing tower. Cellco's new antennas and RRHs will be installed at the 137-foot level on the existing 145-foot tower.

2. The proposed modifications will not involve any change to ground-mounted equipment and, therefore, will not require the extension of the site boundary.

3. The proposed modifications will not increase noise levels at the facility by six decibels or more, or to levels that exceed state and local criteria.

4. The operation of the replacement antennas will not increase radio frequency (RF) emissions at the facility to a level at or above the Federal Communications Commission (FCC) safety standard. A Cumulative General Power Density table for Cellco's modified facility is included in Attachment 2.

5. The proposed modifications will not cause a change or alteration in the physical or environmental characteristics of the site.

6. The tower and its foundation can support Cellco's proposed modifications. (*See* Structural Analysis Report included in Attachment 3).

For the foregoing reasons, Cellco respectfully submits that the proposed modifications to the above-referenced telecommunications facility constitutes an exempt modification under R.C.S.A. § 16-50j-72(b)(2).

Sincerely,

Kenneth C. Baldwin

Enclosures
Copy to:
Mark R. Oefinger, Groton Town Manager
Philip A. Strickland and Daniel J. Perrotta
Sandy M. Carter

ATTACHMENT 1

Product Specifications

COMMSCOPE®

POWERED BY ANDREW.

LNX-6512DS-VTM

Andrew® Antenna, 698–896 MHz, 65° horizontal beamwidth, RET compatible

- Excellent choice to maximize both coverage and capacity in suburban and rural applications
- Ideal choice for site collocations and tough zoning restrictions
- Extended elevation tilt for maximum flexibility in urban core areas
- Remote beam tilt management is an optional feature using Andrew's Teletilt® system
- The RF connectors are designed for IP67 rating and the radome for IP56 rating

Electrical Specifications

Frequency Band, MHz	**698–806**	**806–896**
Gain, dBi	14.1	15.0
Beamwidth, Horizontal, degrees	65	65
Beamwidth, Horizontal Tolerance, degrees	±3	±3
Beamwidth, Vertical, degrees	19.0	17.0
Beam Tilt, degrees	0–15	0–15
USLS, typical, dB	17	18
Front-to-Back Ratio at 180°, dB	28	28
CPR at Boresight, dB	12	12
CPR at Sector, dB	10	10
Isolation, dB	30	30
VSWR | Return Loss, dB	1.4 | 15.6	1.4 | 15.6
PIM, 3rd Order, 2 x 20 W, dBc	-153	-153
Input Power per Port, maximum, watts	400	400
Polarization	±45°	±45°
Impedance	50 ohm	50 ohm

General Specifications

Antenna Brand	Andrew®
Antenna Type	DualPol®
Band	Single band
Brand	DualPol® | Teletilt®
Operating Frequency Band	698 – 896 MHz

Mechanical Specifications

Color	Light gray
Lightning Protection	dc Ground
Radiator Material	Aluminum
Radome Material	Fiberglass, UV resistant
RF Connector Interface	7-16 DIN Female
RF Connector Location	Bottom
RF Connector Quantity, total	2
Wind Loading, maximum	379.8 N @ 150 km/h 85.4 lbf @ 150 km/h
Wind Speed, maximum	241.0 km/h | 149.8 mph

Dimensions

©2014 CommScope, Inc. All rights reserved. All trademarks identified by ® or ™ are registered trademarks, respectively, of CommScope.
All specifications are subject to change. See www.commscope.com for the most current information. Revised: June 11, 2014

Product Specifications

LNX-6512DS-VTM

Depth	181.0 mm | 7.1 in
Length	1232.0 mm | 48.5 in
Width	301.0 mm | 11.9 in
Net Weight	13.0 kg | 28.7 lb

Remote Electrical Tilt (RET) Information

Model with Factory Installed AISG 1.1 Actuator	LNX-6512DS-R2M
Model with Factory Installed AISG 2.0 Actuator	LNX-6512DS-A1M
RET System	Teletilt®

Regulatory Compliance/Certifications

Agency	Classification
RoHS 2011/65/EU	Compliant by Exemption
China RoHS SJ/T 11364-2006	Above Maximum Concentration Value (MCV)
ISO 9001:2008	Designed, manufactured and/or distributed under this quality management system

Included Products

DB380 — Pipe Mounting Kit for 2.4"-4.5" (60-115mm) OD round members on wide panel antennas. Includes 2 clamp sets and double nuts.

DB5083 — Downtilt Mounting Kit for 2.4"-4.5" (60 - 115 mm) OD round members. Includes a heavy-duty, galvanized steel downtilt mounting bracket assembly and associated hardware. This kit is compatible with the DB380 pipe mount kit for panel antennas that are equipped with two mounting brackets.

©2014 CommScope, Inc. All rights reserved. All trademarks identified by ® or ™ are registered trademarks, respectively, of CommScope.
All specifications are subject to change. See www.commscope.com for the most current information. Revised: June 11, 2014

Product Specifications

COMMSCOPE®

HBXX-6517DS-VTM

Andrew® Quad Port Teletilt® Antenna, 1710–2180 MHz, 65° horizontal beamwidth, RET compatible

POWERED BY ANDREW.

Electrical Specifications

Frequency Band, MHz	1710–1880	1850–1990	1920–2180
Gain by all Beam Tilts, average, dBi	18.5	18.6	18.8
Gain by all Beam Tilts Tolerance, dB	±0.4	±0.3	±0.4
Gain by Beam Tilt, average, dBi	0 ° | 18.4 3 ° | 18.7 6 ° | 18.4	0 ° | 18.4 3 ° | 18.7 6 ° | 18.5	0 ° | 18.7 3 ° | 18.9 6 ° | 18.6
Beamwidth, Horizontal, degrees	67	66	65
Beamwidth, Horizontal Tolerance, degrees	±2.4	±1.7	±2.9
Beamwidth, Vertical, degrees	5.0	4.7	4.4
Beamwidth, Vertical Tolerance, degrees	±0.3	±0.3	±0.3
Beam Tilt, degrees	0–6	0–6	0–6
USLS, dB	18	19	19
Front-to-Back Total Power at 180° ± 30°, dB	25	26	26
CPR at Boresight, dB	22	23	22
CPR at Sector, dB	10	10	9
Isolation, dB	30	30	30
VSWR | Return Loss, dB	1.4 | 15.6	1.4 | 15.6	1.4 | 15.6
PIM, 3rd Order, 2 x 20 W, dBc	-153	-153	-153
Input Power per Port, maximum, watts	350	350	350
Polarization	±45°	±45°	±45°

**Values calculated using NGMN Alliance N-P-BASTA v9.6*

Mechanical Specifications

Color | Radome Material	Light gray | PVC, UV resistant
Connector Interface | Location | Quantity	7-16 DIN Female | Bottom | 4
Wind Loading, maximum	668.0 N @ 150 km/h 150.2 lbf @ 150 km/h
Wind Speed, maximum	241.0 km/h | 149.8 mph
Antenna Dimensions, L x W x D	1903.0 mm x 305.0 mm x 166.0 mm | 74.9 in x 12.0 in x 6.5 in
Net Weight	19.5 kg | 43.0 lb
Model with factory installed AISG 2.0 RET	HBXX-6517DS-A2M

©2014 CommScope, Inc. All rights reserved. All trademarks identified by ® or ™ are registered trademarks, respectively, of CommScope.
All specifications are subject to change. See www.commscope.com for the most current information. Revised: February 24, 2014

Alcatel·Lucent

Alcatel-Lucent RRH2x40-AWS

REMOTE RADIO HEAD

The Alcatel-Lucent RRH2x40-AWS is a high-power, small form-factor Remote Radio Head (RRH) operating in the AWS frequency band (1700/2100MHz - 3GPP Band 4). The Alcatel-Lucent RRH2x40-AWS is designed with an eco-efficient approach, providing operators with the means to achieve high quality and capacity coverage with minimum site requirements.

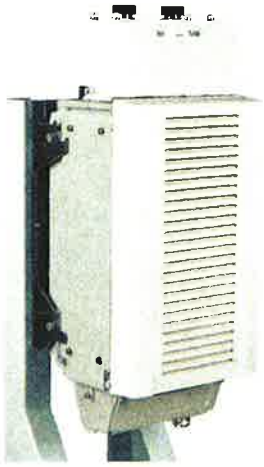

A distributed eNodeB expands deployment options by using two components, a Base Band Unit (BBU) containing the digital assets and a separate RRH containing the radio-frequency (RF) elements. This modular design optimizes available space and allows the main components of an eNodeB to be installed separately, within the same site or several kilometres apart.

The Alcatel-Lucent RRH2x40-AWS is linked to the BBU by an optical-fiber connection carrying downlink and uplink digital radio signals along with operations, administration and maintenance (OA&M) information. The Alcatel-Lucent RRH2x40-AWS has two transmit RF paths, 40 W RF output power per transmit path, and is designed to manage up to four-way receive diversity. The device is ideally suited to support macro coverage, with multiple-input multiple-output (MIMO) 2x2 operation in up to 20 MHz of bandwidth.

The Alcatel-Lucent RRH2x40-AWS is designed to make available all the benefits of a distributed eNodeB, with excellent RF characteristics, with low capital expenditures (CAPEX) and low operating expenditures (OPEX). The limited space available in some sites may prevent the installation of traditional single-cabinet BTS equipment or require costly cranes to be employed, leaving coverage holes. However, many of these sites can host an Alcatel-Lucent RRH2x40-AWS installation, providing more flexible site selection and improved network quality along with greatly reduced installation time and costs.

Fast, low-cost installation and deployment

The Alcatel-Lucent RRH2x40-AWS is a zero-footprint solution and operates noise-free, simplifying negotiations with site property owners and minimizing environmental impacts. Installation can easily be done by a single person because the Alcatel-Lucent RRH2x40-AWS is compact and weighs less than 20 kg (44 lb), eliminating the need for a crane to hoist the BTS cabinet to the rooftop. A site can be in operation in less than one day — a fraction of the time required for a traditional BTS.

Excellent RF performance

Because of its small size and weight, the Alcatel-Lucent RRH2x40-AWS can be installed close to the antenna. Operators can therefore locate the Alcatel-Lucent RRH2x40-AWS where RF engineering is deemed ideal, minimizing trade-offs between available sites and RF optimum sites. The RF feeder cost and installation costs are reduced or eliminated, and there is no need for a Tower Mounted Amplifier (TMA) because losses introduced by the RF feeder are greatly reduced. The Alcatel-Lucent RRH2x40-AWS provides more RF power while at the same time consuming less electricity.

Features

- Zero-footprint deployment
- Easy installation, with a lightweight unit can be carried and set up by one person
- Optimized RF power, with flexible site selection and elimination of a TMA
- Convection-cooled (fanless)
- Noise-free
- Best-in-class power efficiency, with significantly reduced energy consumption

Benefits

- Leverages existing real estate with lower site costs
- Reduces installation costs, with fewer installation materials and simplified logistics
- Decreases power costs and minimizes environmental impacts, with the potential for eco-sustainable power options
- Improves RF performance and adds flexibility to network planning

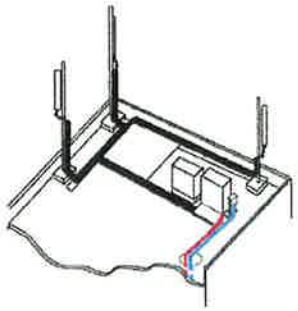

Macro

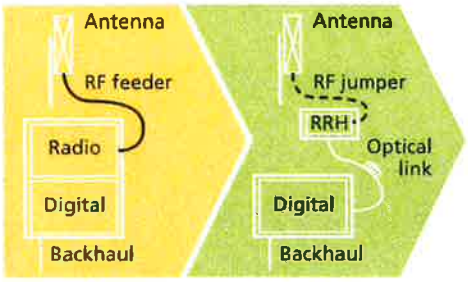

RRH for space-constrained cell sites

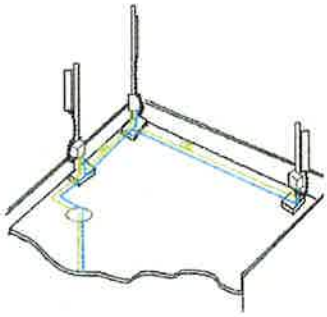

Distributed

Technical specifications

Physical dimensions

- Height: 620 mm (24.4 in.)
- Width: 270 mm (10.63 in.)
- Depth: 170m (6.7 in.)
- Weight (without mounting kit): less than 20 kg (44 lb)

Power

- Power supply: -48VDC

Operating environment

- Outdoor temperature range:
  - With solar load: -40°C to +50°C (-40°F to +122°F)
  - Without solar load: -40°C to +55°C (-40°F to +131°F)
- Passive convection cooling (no fans)
- Enclosure protection
  - IP65 (International Protection rating)

RF characteristics

- Frequency band: 1700/2100 MHz (AWS); 3GPP Band 4
- Bandwidth: up to 20 MHz
- RF output power at antenna port: 40 W nominal RF power for each Tx port
- Rx diversity: 2-way or 4-way with optional Rx Diversity module
- Noise figure: below 2.0 dB typical
- Antenna Line Device features
  - TMA and Remote electrical tilt (RET) support via AISG v2.0

Optical characteristics

Type/number of fibers

- Single-mode variant
  - One Single Mode Single Fiber per RRH2x, carrying UL and DL using CWDM
  - Single mode dual fiber (SM/DF)
- Multi-mode variant
  - Two Multi-mode fibers per RRH2x: one carrying UL, the other carrying DL

Optical fiber length

- Up to 500 m (0.31 mi), using MM fiber
- Up to 20 km (12.43 mi), using SM fiber

Digital Ports and Alarms

- Two optical ports to support daisy-chaining
- Six external alarms

www.alcatel-lucent.com Alcatel, Lucent, Alcatel-Lucent and the Alcatel-Lucent logo are trademarks of Alcatel-Lucent. All other trademarks are the property of their respective owners. The information presented is subject to change without notice. Alcatel-Lucent assumes no responsibility for inaccuracies contained herein. Copyright © 2010 Alcatel-Lucent. All rights reserved.
CPG2809100912 (09)

Alcatel·Lucent

Product Data Sheet **HB158-1-08U8-S8J18**

HYBRIFLEX™ RRH Hybrid Feeder Cabling Solution, 1-5/8", Single-Mode Fiber

Product Description

RFS' HYBRIFLEX Remote Radio Head (RRH) hybrid feeder cabling solution combines optical fiber and DC power for RRHs in a single lightweight aluminum corrugated cable, making it the world's most innovative solution for RRH deployments.

It was developed to reduce installation complexity and costs at Cellular sites. HYBRIFLEX allows mobile operators deploying an RRH architecture to standardize the RRH installation process and eliminate the need for and cost of cable grounding. HYBRIFLEX combines optical fiber (multi-mode or single-mode) and power in a single corrugated cable. It eliminates the need for junction boxes and can connect multiple RRHs with a single feeder. Standard RFS CELLFLEX® accessories can be used with HYBRIFLEX cable. Both pre-connectorized and on-site options are available.

Figure 1: HYBRIFLEX Series

Features/Benefits

- Aluminum corrugated armor with outstanding bending characteristics – minimizes installation time and enables mechanical protection and shielding
- Same accessories as 1 5/8" coaxial cable
- Outer conductor grounding – Eliminates typical grounding requirements and saves on installation costs
- Lightweight solution and compact design – Decreases tower loading
- Robust cabling – Eliminates need for expensive cable trays and ducts
- Installation of tight bundled fiber optic cable pairs directly to the RRH – Reduces CAPEX and wind load by eliminating need for interconnection
- Optical fiber and power cables housed in single corrugated cable – Saves CAPEX by standardizing RRH cable installation and reducing installation requirements
- Outdoor polyethylene jacket – Ensures long-lasting cable protection

Technical Specifications

Structure			
Outer Conductor Armor	Corrugated Aluminum	[mm (in)]	46.5 (1.83)
Jacket	Polyethylene, PE	[mm (in)]	50.3 (1.98)
UV-Protection	Individual and External Jacket		Yes
Mechanical Properties			
Weight, Approximate		[kg/m (lb/ft)]	1.9 (1.30)
Minimum Bending Radius, Single Bending		[mm (in)]	200 (8)
Minimum Bending Radius, Repeated Bending		[mm (in)]	500 (20)
Recommended/Maximum Clamp Spacing		[m (ft)]	1.0 / 1.2 (3.25 / 4.0)
Electrical Properties			
DC-Resistance Outer Conductor Armor		[Ω/km (Ω/1000ft)]	.068 (0.205)
DC-Resistance Power Cable, 8.4mm² (8AWG)		[Ω/km (Ω/1000ft)]	2.1 (0.307)
Fiber Optic Properties			
Version			Single-mode OM3
Quantity, Fiber Count			16 (8 pairs)
Core/Clad		[µm]	50/125
Primary Coating (Acrylate)		[µm]	245
Buffer Diameter, Nominal		[µm]	900
Secondary Protection, Jacket, Nominal		[mm (in)]	2.0 (0.08)
Minimum Bending Radius		[mm (in)]	104 (4.1)
Insertion Loss @ wavelength 850nm		dB/km	3.0
Insertion Loss @ wavelength 1310nm		dB/km	1.0
Standards (Meets or exceeds)			UL94-V0, UL1666 RoHS Compliant
DC Power Cable Properties			
Size (Power)		[mm² (AWG)]	8.4 (8)
Quantity, Wire Count (Power)			16 (8 pairs)
Size (Alarm)		[mm² (AWG)]	0.8 (18)
Quantity, Wire Count (Alarm)			4 (2 pairs)
Type			UV protected
Strands			19
Primary Jacket Diameter, Nominal		[mm (in)]	6.8 (0.27)
Standards (Meets or exceeds)			NFPA 130, ICEA S-95-658 UL Type XHHW-2, UL 44 UL-LS Limited Smoke, UL VW-1 IEEE-383 (1974), IEEE1202/FT4 RoHS Compliant
Environment			
Installation Temperature		[°C (°F)]	-40 to +65 (-40 to149)
Operation Temperature		[°C (°F)]	-40 to +65 (-40 to149)

* This data is provisional and subject to change

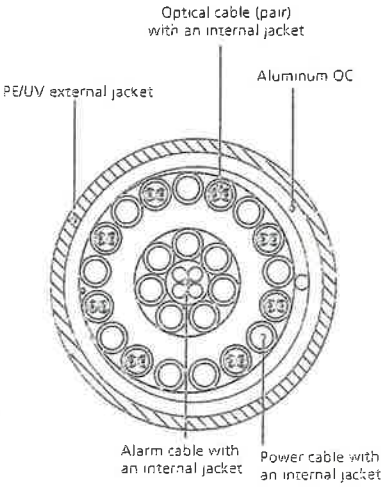

Figure 2: Construction Detail

All information contained in the present datasheet is subject to confirmation at time of ordering

ATTACHMENT 2

	General	Power	Density					
Site Name: Groton 5								
Tower Height: 144.5Ft								
CARRIER	**# OF CHAN.**	**WATTS ERP**	**HEIGHT**	**CALC. POWER DENS**	**FREQ.**	**MAX. PERMISS. EXP.**	**FRACTION MPE**	**Total**
*Sprint CDMA/LTE	4	693	113	0.0781	1900	1.0000	7.81%	
*Sprint CDMA/LTE	1	390	113	0.0110	850	0.5667	1.94%	
*MetroPCS	3	727	102	0.0754	2140	1.0000	7.54%	
*T-Mobile GSM/UMTS	2	12	126	0.0005	1950	1.0000	0.05%	
*T-Mobile UMTS	2	16	126	0.0007	2100	1.0000	0.07%	
*T-Mobile LTE	2	24	126	0.0011	2100	1.0000	0.11%	
*AT&T UMTS	2	565	147	0.0188	880	0.5867	3.21%	
*AT&T UMTS	2	875	147	0.0291	1900	1.0000	2.91%	
*AT&T GSM	1	283	147	0.0047	880	0.5867	0.80%	
*AT&T GSM	4	525	147	0.0349	1900	1.0000	3.49%	
*AT&T LTE	1	1615	144.75	0.0277	734	0.4893	5.66%	
Verizon	**11**	**423**	**137**	**0.0891**	**1970**	**1.0000**	**8.91%**	
Verizon	**9**	**395**	**137**	**0.0681**	**869**	**0.5793**	**11.76%**	
Verizon	**1**	**1750**	**137**	**0.0335**	**2145**	**1.0000**	**3.35%**	
Verizon	**1**	**1050**	**137**	**0.0201**	**698**	**0.4973**	**4.04%**	
								61.66%
* Source: Siting Council								

ATTACHMENT 3

May 16, 2014

Sean Dempsey
Crown Castle
3530 Toringdon Way Suite 300
Charlotte, NC 28277
(704) 405-6565

B+T GRP

B+T Group
1717 S. Boulder, Suite 300
Tulsa, OK 74119
(918) 587-4630
btwo@btgrp.com

Subject:	**Structural Analysis Report**	
Carrier Designation:	***Verizon Wireless* Co-Locate**	
	Carrier Site Number:	174802
	Carrier Site Name:	Groton 5 CT
Crown Castle Designation:	**Crown Castle BU Number:**	881533
	Crown Castle Site Name:	Groton Tower
	Crown Castle JDE Job Number:	266117
	Crown Castle Work Order Number:	735467
	Crown Castle Application Number:	219527 Rev. 8
Engineering Firm Designation:	**B+T Group Project Number:**	92739.001.01
Site Data:	**75 Roberts Road, Groton, New London County, CT**	
	Latitude *41° 21' 36.8"*, Longitude *-72° 2' 55.1"*	
	144.5 Foot - Monopole Tower	

Dear Sean Dempsey,

B+T Group is pleased to submit this **"Structural Analysis Report"** to determine the structural integrity of the above mentioned tower. This analysis has been performed in accordance with the Crown Castle Structural 'Statement of Work' and the terms of Crown Castle Purchase Order Number 646848, in accordance with application 219527, revision 8.

The purpose of the analysis is to determine acceptability of the tower stress level. Based on our analysis we have determined the tower stress level for the structure and foundation, under the following load case, to be:

LC4.7: Existing + Reserved + Proposed Equipment and Modification **Sufficient Capacity**
Note: See Table 1 and Table 2 for the proposed and existing/reserved loading, respectively.

This analysis has been performed in accordance with the TIA/EIA-222-F standard and 2005 CT State Building Code with 2009 amendment based upon a wind speed of 85 mph fastest mile.

All equipment proposed in this report shall be installed in accordance with the attached drawings for the determined available structural capacity to be effective.

We at *B+T Group* appreciate the opportunity of providing our continuing professional services to you and Crown Castle. If you have any questions or need further assistance on this or any other projects please give us a call.

Respectfully submitted by:
B+T Engineering, Inc.

STATE OF CONNECTICUT
CHAD E. TUTTLE
No. 23924
LICENSED
PROFESSIONAL ENGINEER

5/16/14

Shardul Kadam, E.I.
Project Engineer

Chad E. Tuttle, P.E.
President

tnxTower Report - version 6.1.4.1

TABLE OF CONTENTS

1) INTRODUCTION

2) ANALYSIS CRITERIA
- Table 1 - Proposed Antenna and Cable Information
- Table 2 - Existing and Reserved Antenna and Cable Information
- Table 3 - Design Antenna and Cable Information

3) ANALYSIS PROCEDURE
- Table 4 - Documents Provided
- 3.1) Analysis Method
- 3.2) Assumptions

4) ANALYSIS RESULTS
- Table 5 - Section Capacity (Summary)
- Table 6 – Tower Components vs. Capacity
- 4.1) Recommendations

5) APPENDIX A
- tnxTower Output

6) APPENDIX B
- Base Level Drawing

7) APPENDIX C
- Additional Calculations

1) INTRODUCTION

This tower is a 144.5 ft. Monopole tower designed by Engineered Endeavors, Inc. in January of 2001. The tower was originally designed for a wind speed of 85 mph per TIA/EIA-222-F.This tower was modified by Walker Engineering in August of 2007, later reinforced by Vertical Structures in November of 2008 and Crown Castle In February of 2014 for additional Loading.

2) ANALYSIS CRITERIA

The structural analysis was performed for this tower in accordance with the requirements of TIA/EIA-222-F Structural Standards for Steel Antenna Towers and Antenna Supporting Structures using a fastest mile wind speed of 85 mph with no ice, 37.6 mph with 0.75 inch ice thickness and 50 mph under service loads.

Table 1 - Proposed Antenna and Cable Information

Mounting Level (ft)	Center Line Elevation (ft)	Number of Antennas	Antenna Manufacturer	Antenna Model	Number of Feed Lines	Feed Line Size (in)	Note
135.0	137.0	3	Alcatel Lucent	RRH2X40-AWS	1	1 5/8	--
		3	Andrew	HBXX-6517DS-VTM			
		3	Andrew	LNX-6512DS-VTM			
		1	RFS Celwave	DB-T1-6Z-8AB-0Z			

Table 2 - Existing and Reserved Antenna and Cable Information

Mounting Level (ft)	Center Line Elevation (ft)	Number of Antennas	Antenna Manufacturer	Antenna Model	Number of Feed Lines	Feed Line Size (in)	Note
145.0	146.0	6	Powerwave Tech.	7770.00	12 3	1 5/8 3/8	1
	145.0	6	ADC	DUAL BAND 800/1900 FULL BAND MASTHEAD			
		1	Andrew	SBNH-1D6565C			
		3	Ericsson	RRUS 11			
		6	Kathrein	782-10250			
		1	KMW Comm.	AM-X-CD-17-65-00T-RET			
		6	Powerwave Tech.	LGP13519			
		1	Powerwave Tech.	P65-17-XLH-RR			
		1	Raycap	DC6-48-60-18-8F			
		1	--	Platform Mount [LP 712-1]			
		1	--	--	1	1 5/8	3
135.0	137.0	**6**	**Antel**	**LPA-80063/4CF**	--	--	**4**
		3	Antel	BXA-171063/8CF	12	1 5/8	1
		3	Antel	BXA-70063-6CF-EDIN-0			
		6	RFS Celwave	FD9R6004/2C-3L			
	135.0	6	Andrew	CBC721-DF			
		1	--	Platform Mount [LP 712-1]			
125.0	126.0	3	Ericsson	ERICSSON AIR 21 B2A B4P	1	1 5/8	2
		3	Ericsson	ERICSSON AIR 21 B4A B2P			
		3	Ericsson	KRY 112 144/1			

Mounting Level (ft)	Center Line Elevation (ft)	Number of Antennas	Antenna Manufacturer	Antenna Model	Number of Feed Lines	Feed Line Size (in)	Note
	125.0	1	--	Platform Mount [LP 712-1]	12	1 5/8	1
113.0	113.0	3	RFS Celwave	APXVSPP18-C-A20	3	1 1/4	1
		1	--	Platform Mount [LP 712-1]			
111.0	111.0	3	Alcatel Lucent	PCS 1900MHz 4x45W-65MHz	--	--	1
		1	--	Side Arm Mount [SO 102-3]			
	109.0	3	Alcatel Lucent	800MHz 2X50W RRH W/FILTER			
100.0	102.0	3	Kathrein	800 10504	6	7/8	1
	100.0	1	--	Platform Mount [LP 712-1]	1	3/8	
51.0	52.0	1	Lucent	KS24019-L112A	1	1/2	1
	51.0	1	--	Side Arm Mount [SO 701-1]			

Notes:
1) Existing Equipment
2) Reserved Equipment
3) Abandoned Equipment; Considered in this Analysis
4) Equipment To Be Removed

Table 3 - Design Antenna and Cable Information

Mounting Level (ft)	Center Line Elevation (ft)	Number of Antennas	Antenna Manufacturer	Antenna Model	Number of Feed Lines	Feed Line Size (in)
145	145	12	Allgon	7120.16	--	--
		1	Generic	Low Profile Platform		
135	135	12	Allgon	7120.16	--	--
		1	Generic	Low Profile Platform		
125	125	9	Allgon	7120.16	--	--
		1	Generic	Low Profile Platform		
115	115	12	Allgon	7120.16	--	--
		1	Generic	Low Profile Platform		
105	105	12	Allgon	7120.16	--	--
		1	Generic	Low Profile Platform		
95	95	12	Allgon	7120.16	--	--
		1	Generic	Low Profile Platform		

3) ANALYSIS PROCEDURE

Table 4 - Documents Provided

Document	Remarks	Reference	Source
Online Application	Verizon Wireless Co-Locate Rev# 8	219527	CCI Sites
Tower Manufacturer Drawings	EEI, Job No.8409	1405782	CCI Sites
Tower Modification Drawings	Walker Engineering, Job No. 0705-014VRE	2048224	CCI Sites
	Vertical Solutions, Job No. 2008-044-155	2353860	CCI Sites
	CCI, Date: 02/25/2014	4491288	CCI Sites
Foundation Drawings	URS, Project No.F301877.01/F04	1405796	CCI Sites
Geotech Report	Clarence Welti, Date: 03/13/2000	1406209	CCI Sites
Antenna Configuration	Crown CAD Package	Date: 05/07/2014	CCI Sites

3.1) Analysis Method

tnxTower (version 6.1.4.1), a commercially available analysis software package, was used to create a three-dimensional model of the tower and calculate member stresses for various loading cases. Selected output from the analysis is included in Appendix A.

3.2) Assumptions

1) Tower and structures were built in accordance with the manufacturer's specifications.
2) The tower and structures have been maintained in accordance with the manufacturer's specification.
3) The configuration of antennas, transmission cables, mounts and other appurtenances are as specified in Tables 1 and 2 and the referenced drawings.
4) When applicable, transmission cables are considered as structural components for calculating wind loads as allowed by TIA/EIA-222-F.
5) Mount areas and weights are assumed based on photographs provided.
6) The existing base plate grout was not considered in this analysis.

This analysis may be affected if any assumptions are not valid or have been made in error. B+T Group should be notified to determine the effect on the structural integrity of the tower.

4) ANALYSIS RESULTS

Table 5 - Section Capacity (Summary)

Section No.	Elevation (ft)	Component Type	Size	Critical Element	P (K)	SF*P_allow (K)	% Capacity	Pass / Fail
L1	144.5 - 117.57	Pole	TP26.875x21x0.188	1	-6.504	799.625	61.5	Pass
L2	117.57 - 98.5	Pole	TP30.575x25.658x0.25	2	-12.761	1250.948	92.8	Pass
L3	98.5 - 87.19	Pole	TP33x30.575x0.399	3	-14.049	1494.546	90.3	Pass
L4	87.19 - 41.76	Pole	TP42.219x31.282x0.375	4	-23.735	2510.519	99.6	Pass
L5	41.76 - 0	Pole	TP50.5x40.197x0.438	5	-37.838	3614.029	95.7	Pass
							Summary	
						Pole (L4)	99.6	Pass
						RATING =	**99.6**	**Pass**

Table 6 - Tower Component Stresses vs. Capacity – LC4.7

Notes	Component	Elevation (ft)	% Capacity	Pass / Fail
1	Anchor Rods	Base	90.6	Pass
1	Base Plate	Base	80.4	Pass
1	Base Foundation Soil Interaction	Base	52.2	Pass

Structure Rating (max from all components) =	**99.6%**

Notes:
1) See additional documentation in "Appendix C – Additional Calculations" for calculations supporting the % capacity consumed.
2) Capacities up to 100% are considered acceptable based on analysis methods used.

4.1) Recommendations

The tower and its foundation have sufficient capacity to carry the existing, reserved, and proposed loads once the proposed modifications are installed.

APPENDIX A

TNXTOWER OUTPUT

Section	1	2	3	4	5
Length (ft)	26.930	22.930	11.310	49.720	47.540
Number of Sides	18	18	18	18	18
Thickness (in)	0.188	0.250	0.399	0.375	0.438
Socket Length (ft)	3.860		4.290	5.780	
Top Dia (in)	21.000	25.658	30.575	31.282	40.197
Bot Dia (in)	26.875	30.575	33.000	42.219	50.500
Grade	A572-65	A572-65		46.571762ksi	A572-65
Weight (K)	1.3	1.7	1.5	7.3	10.1

21.9

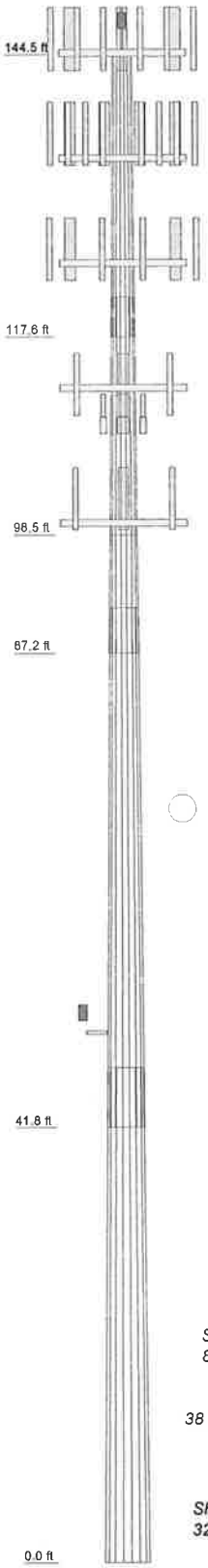

DESIGNED APPURTENANCE LOADING

TYPE	ELEVATION	TYPE	ELEVATION
Lighting Rod 5/8" x 5' (E)	147	LNX-6512DS-VTM w/ Mount Pipe (P)	135
Strobe (E)	147	LNX-6512DS-VTM w/ Mount Pipe (P)	135
(2) 7770.00 w/ Mount Pipe (E)	145	LNX-6512DS-VTM w/ Mount Pipe (P)	135
(2) 7770.00 w/ Mount Pipe (E)	145	RRH2X40-AWS (P)	135
(2) 7770.00 w/ Mount Pipe (E)	145	RRH2X40-AWS (P)	135
P65-17-XLH-RR w/ Mount Pipe (E)	145	RRH2X40-AWS (P)	135
AM-X-CD-17-65-00T-RET w/ Mount Pipe (E)	145	DB-T1-6Z-8AB-0Z (P)	135
		Platform Mount [LP 712-1] (E)	135
SBNH-1D6565C w/ Mount Pipe (E)	145	ERICSSON AIR 21 B2A B4P w/ Mount Pipe (R)	125
RRUS 11 (E)	145		
RRUS 11 (E)	145	ERICSSON AIR 21 B2A B4P w/ Mount Pipe (R)	125
RRUS 11 (E)	145		
(2) DUAL BAND 800/1900 FULL BAND MASTHEAD (E)	145	ERICSSON AIR 21 B2A B4P w/ Mount Pipe (R)	125
(2) DUAL BAND 800/1900 FULL BAND MASTHEAD (E)	145	ERICSSON AIR 21 B4A B2P w/ Mount Pipe (R)	125
(2) DUAL BAND 800/1900 FULL BAND MASTHEAD (E)	145	ERICSSON AIR 21 B4A B2P w/ Mount Pipe (R)	125
		ERICSSON AIR 21 B4A B2P w/ Mount Pipe (R)	125
(2) 782-10250 (E)	145	KRY 112 144/1 (R)	125
(2) 782-10250 (E)	145	KRY 112 144/1 (R)	125
(2) 782-10250 (E)	145	KRY 112 144/1 (R)	125
(2) LGP13519 (E)	145	Platform Mount [LP 712-1] (E)	125
(2) LGP13519 (E)	145	APXVSPP18-C-A20 w/ Mount Pipe (E)	113
(2) LGP13519 (E)	145	APXVSPP18-C-A20 w/ Mount Pipe (E)	113
DC6-48-60-18-8F (E)	145	APXVSPP18-C-A20 w/ Mount Pipe (E)	113
6' x 2" Mount Pipe (E)	145	(3) 6' x 2" Mount Pipe (E)	113
6' x 2" Mount Pipe (E)	145	(3) 6' x 2" Mount Pipe (E)	113
6' x 2" Mount Pipe (E)	145	(3) 6' x 2" Mount Pipe (E)	113
Platform Mount [LP 712-1] (E)	145	Platform Mount [LP 712-1] (E)	113
BXA-171063/8CF w/ Mount Pipe (E)	135	800MHz 2X50W RRH W/FILTER (E)	111
BXA-171063/8CF w/ Mount Pipe (E)	135	800MHz 2X50W RRH W/FILTER (E)	111
BXA-171063/8CF w/ Mount Pipe (E)	135	800MHz 2X50W RRH W/FILTER (E)	111
BXA-70063-6CF-EDIN-0 w/ Mount Pipe (E)	135	PCS 1900MHz 4x45W-65MHz (E)	111
		PCS 1900MHz 4x45W-65MHz (E)	111
BXA-70063-6CF-EDIN-0 w/ Mount Pipe (E)	135	PCS 1900MHz 4x45W-65MHz (E)	111
		Side Arm Mount [SO 102-3] (E)	111
BXA-70063-6CF-EDIN-0 w/ Mount Pipe (E)	135	800 10504 w/ Mount Pipe (E)	100
(2) CBC721-DF (E)	135	800 10504 w/ Mount Pipe (E)	100
(2) CBC721-DF (E)	135	800 10504 w/ Mount Pipe (E)	100
(2) CBC721-DF (E)	135	7'x2" Antenna Mount Pipe (E)	100
(2) FD9R6004/2C-3L (E)	135	7'x2" Antenna Mount Pipe (E)	100
(2) FD9R6004/2C-3L (E)	135	7'x2" Antenna Mount Pipe (E)	100
(2) FD9R6004/2C-3L (E)	135	Platform Mount [LP 712-1] (E)	100
HBXX-6517DS-VTM w/ Mount Pipe (P)	135	KS24019-L112A (E)	51
		Side Arm Mount [SO 701-1] (E)	51
HBXX-6517DS-VTM w/ Mount Pipe (P)	135		
HBXX-6517DS-VTM w/ Mount Pipe (P)	135		

MATERIAL STRENGTH

GRADE	Fy	Fu	GRADE	Fy	Fu
A572-65	65 ksi	80 ksi	46.571762ksi	47 ksi	62 ksi

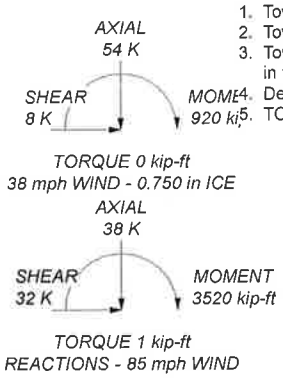

TOWER DESIGN NOTES

1. Tower is located in New London County, Connecticut.
2. Tower designed for a 85 mph basic wind in accordance with the TIA/EIA-222-F Standard.
3. Tower is also designed for a 38 mph basic wind with 0.75 in ice. Ice is considered to increase in thickness with height.
4. Deflections are based upon a 50 mph wind.
5. TOWER RATING: 99.6%

B+T Group
1717 S.Boulder, Suite 300
Tulsa, OK 74119
Phone: (918) 587-4630
FAX: (918) 587-4630

Job: 92739.001.01 - GROTON TOWER, CT (BU# 88153		
Project:		
Client: Crown Castle	Drawn by: skadam	App'd:
Code: TIA/EIA-222-F	Date: 05/16/14	Scale: NTS
Path:		Dwg No. E-1

TIA/EIA-222-F - 85 mph/38 mph 0.750 in Ice

Vx ---------- Vz

Maximum Values

Mx ---------- Mz

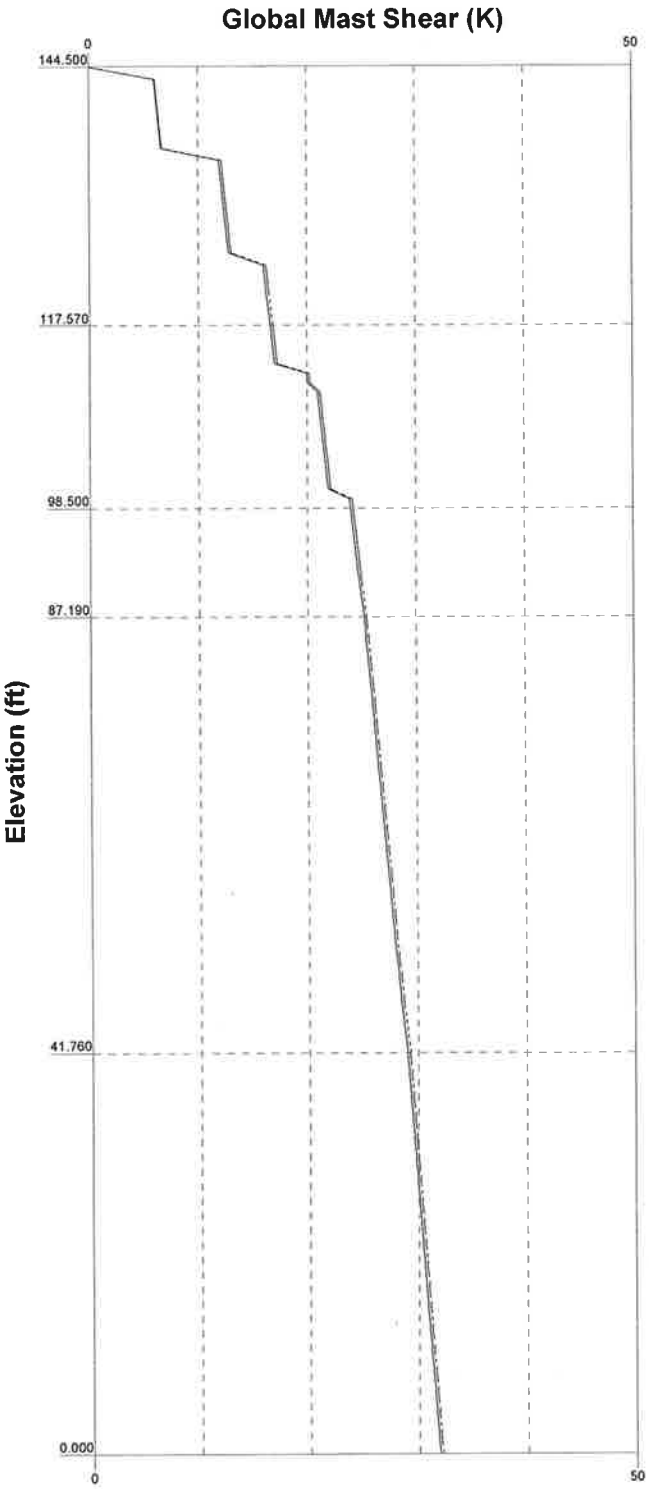

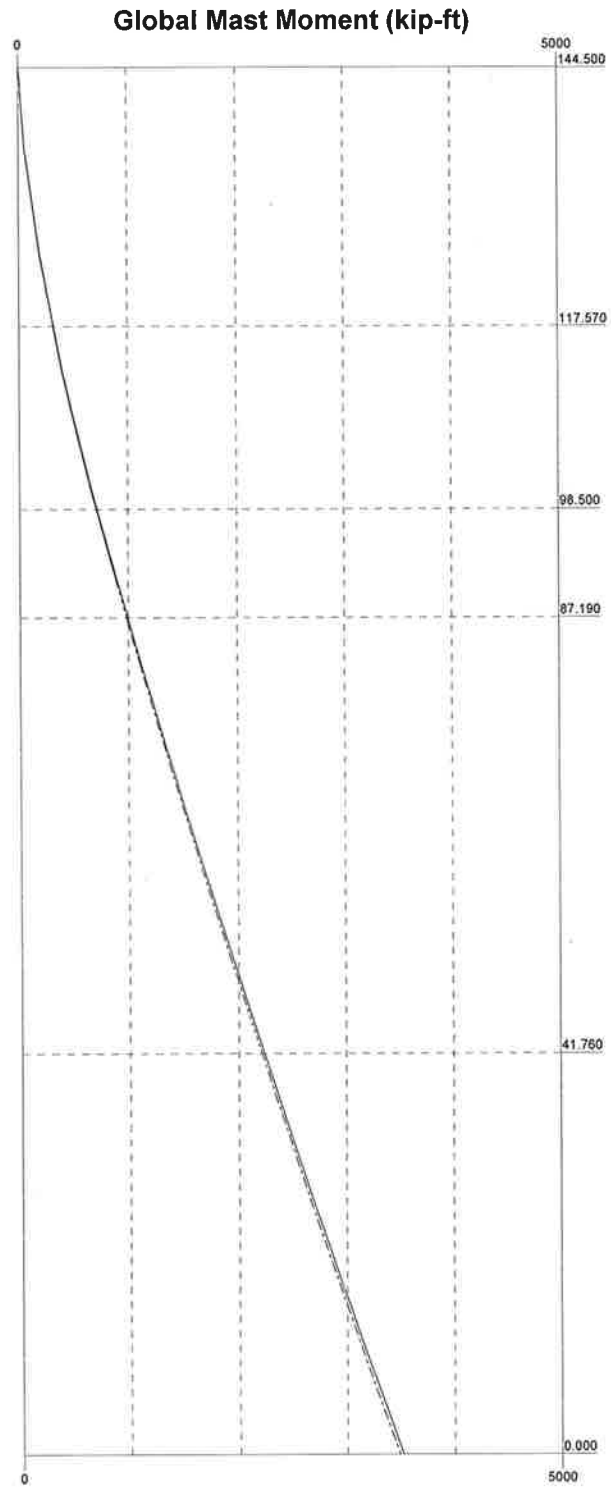

B+T Group 1717 S.Boulder, Suite 300 Tulsa, OK 74119 Phone: (918) 587-4630 FAX: (918) 587-4630	Job: 92739.001.01 - GROTON TOWER, CT (BU# 88153		
	Project:		
	Client: Crown Castle	Drawn by: skadam	App'd:
	Code: TIA/EIA-222-F	Date: 05/16/14	Scale: NTS
	Path:		Dwg No. E-4

TIA/EIA-222-F - Service - 50 mph

Maximum Values

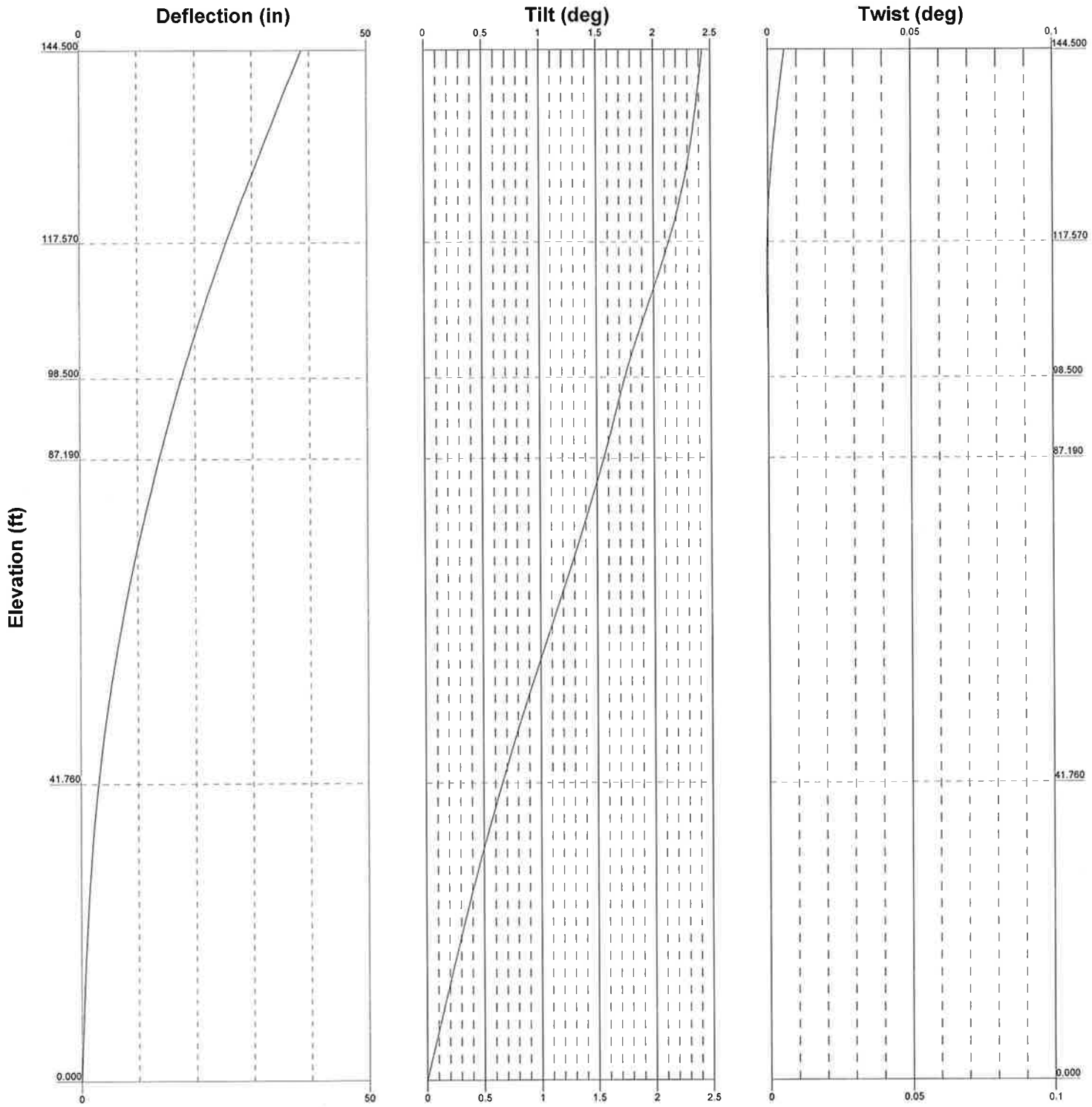

B+T Group 1717 S.Boulder, Suite 300 Tulsa, OK 74119 Phone: (918) 587-4630 FAX: (918) 587-4630	Job: 92739.001.01 - GROTON TOWER, CT (BU# 88153		
	Project:		
	Client: Crown Castle	Drawn by: skadam	App'd:
	Code: TIA/EIA-222-F	Date: 05/16/14	Scale: NTS
	Path:		Dwg No. E-5

Feed Line Distribution Chart
0' - 144'6"

Round | Flat | App In Face | App Out Face | Truss Leg

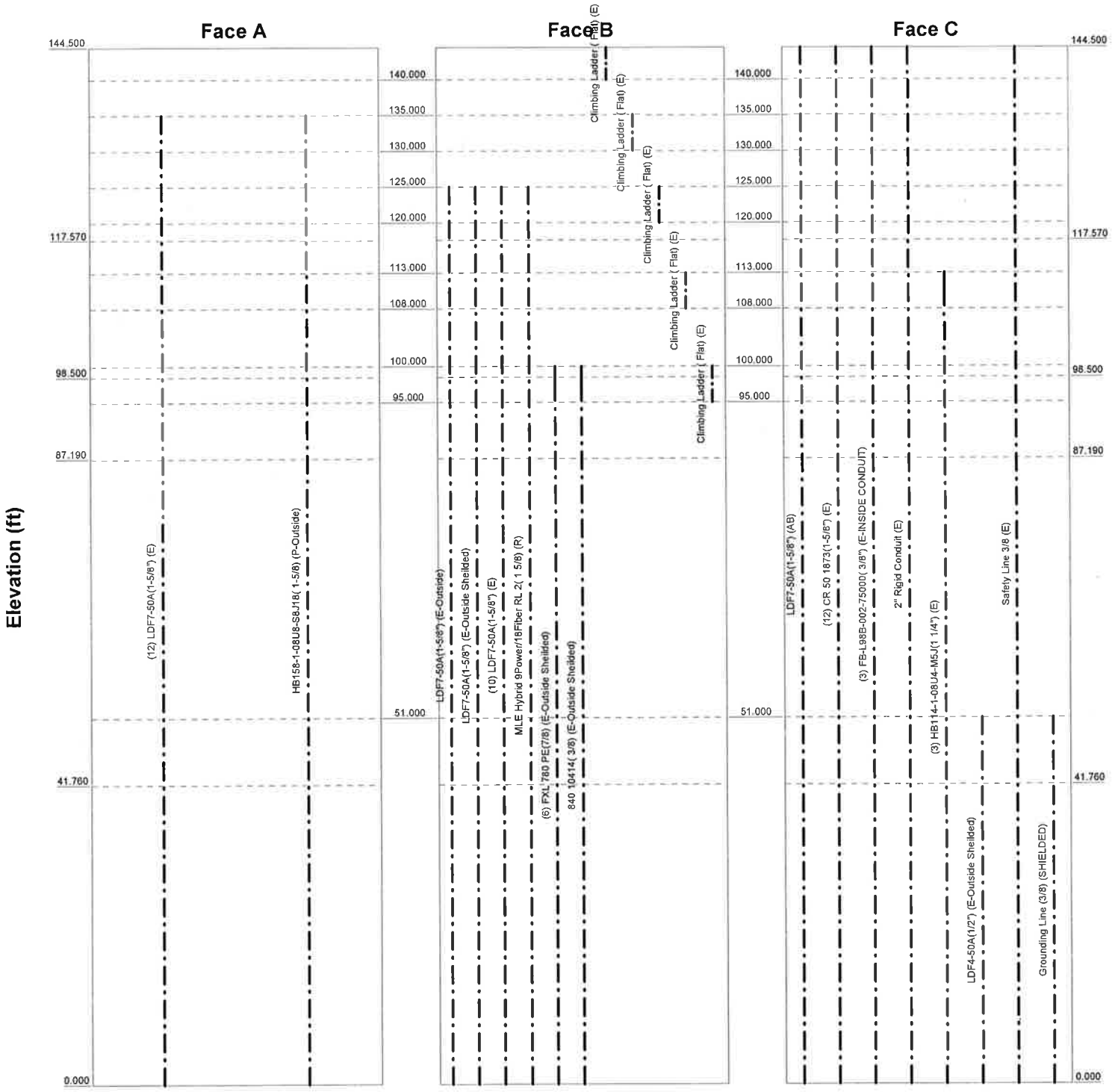

B+T Group
1717 S.Boulder, Suite 300
Tulsa, OK 74119
Phone: (918) 587-4630
FAX: (918) 587-4630

Job: 92739.001.01 - GROTON TOWER, CT (BU# 88153		
Project:		
Client: Crown Castle	Drawn by: skadam	App'd:
Code: TIA/EIA-222-F	Date: 05/16/14	Scale: NTS
Path:		Dwg No. E-7

Tower Input Data

There is a pole section.
This tower is designed using the TIA/EIA-222-F standard.
The following design criteria apply:

Tower is located in New London County, Connecticut.
Basic wind speed of 85 mph.
Nominal ice thickness of 0.750 in.
Ice thickness is considered to increase with height.
Ice density of 56.000 pcf.
A wind speed of 38 mph is used in combination with ice.
Temperature drop of 50.000 °F.
Deflections calculated using a wind speed of 50 mph.
TOWER RATING: 99.6%.
A non-linear (P-delta) analysis was used.
Pressures are calculated at each section.
Stress ratio used in pole design is 1.333.
Local bending stresses due to climbing loads, feed line supports, and appurtenance mounts are not considered.

Options

Consider Moments - Legs
Consider Moments - Horizontals
Consider Moments - Diagonals
Use Moment Magnification
√ Use Code Stress Ratios
√ Use Code Safety Factors - Guys
√ Escalate Ice
Always Use Max Kz
Use Special Wind Profile
Include Bolts In Member Capacity
Leg Bolts Are At Top Of Section
Secondary Horizontal Braces Leg
Use Diamond Inner Bracing (4 Sided)
Add IBC .6D+W Combination

Distribute Leg Loads As Uniform
Assume Legs Pinned
√ Assume Rigid Index Plate
√ Use Clear Spans For Wind Area
Use Clear Spans For KL/r
Retension Guys To Initial Tension
√ Bypass Mast Stability Checks
√ Use Azimuth Dish Coefficients
√ Project Wind Area of Appurt.
Autocalc Torque Arm Areas
SR Members Have Cut Ends
Sort Capacity Reports By Component
Triangulate Diamond Inner Bracing
Use TIA-222-G Tension Splice Capacity Exemption

Treat Feedline Bundles As Cylinder
Use ASCE 10 X-Brace Ly Rules
Calculate Redundant Bracing Forces
Ignore Redundant Members in FEA
SR Leg Bolts Resist Compression
All Leg Panels Have Same Allowable
Offset Girt At Foundation
√ Consider Feedline Torque
Include Angle Block Shear Check Poles
√ Include Shear-Torsion Interaction
Always Use Sub-Critical Flow
Use Top Mounted Sockets

Tapered Pole Section Geometry

Section	Elevation ft	Section Length ft	Splice Length ft	Number of Sides	Top Diameter in	Bottom Diameter in	Wall Thickness in	Bend Radius in	Pole Grade
L1	144.500-117.570	26.930	3.860	18	21.000	26.875	0.188	0.750	A572-65 (65 ksi)
L2	117.570-98.500	22.930	0.000	18	25.658	30.575	0.250	1.000	A572-65 (65 ksi)
L3	98.500-87.190	11.310	4.290	18	30.575	33.000	0.399	1.596	46.571762ksi (47 ksi)
L4	87.190-41.760	49.720	5.780	18	31.282	42.219	0.375	1.500	A572-65 (65 ksi)
L5	41.760-0.000	47.540		18	40.197	50.500	0.438	1.750	A572-65

Section	Elevation ft	Section Length ft	Splice Length ft	Number of Sides	Top Diameter in	Bottom Diameter in	Wall Thickness in	Bend Radius in	Pole Grade
									(65 ksi)

Tapered Pole Properties

Section	Tip Dia. in	Area in^2	I in^4	r in	C in	I/C in^3	J in^4	It/Q in^2	w in	w/t
L1	21.324	12.386	677.826	7.388	10.668	63.538	1356.544	6.194	3.366	17.952
	27.290	15.882	1429.122	9.474	13.653	104.678	2860.125	7.943	4.400	23.467
L2	26.894	20.161	1644.338	9.020	13.034	126.155	3290.840	10.083	4.076	16.303
	31.046	24.063	2795.619	10.765	15.532	179.991	5594.916	12.034	4.941	19.765
L3	31.046	38.218	4396.605	10.712	15.532	283.068	8798.995	19.112	4.679	11.726
	33.509	41.289	5544.139	11.573	16.764	330.717	11095.574	20.648	5.106	12.796
L4	32.723	36.787	4439.645	10.972	15.891	279.376	8885.131	18.397	4.846	12.922
	42.870	49.805	11017.143	14.855	21.447	513.688	22048.783	24.907	6.771	18.055
L5	42.089	55.212	11027.016	14.115	20.420	540.003	22068.542	27.611	6.305	14.411
	51.279	69.518	22012.027	17.772	25.654	858.035	44053.017	34.766	8.118	18.555

Tower Elevation ft	Gusset Area (per face) ft^2	Gusset Thickness in	Gusset Grade	Adjust. Factor A_f	Adjust. Factor A_r	Weight Mult.	Double Angle Stitch Bolt Spacing Diagonals in	Double Angle Stitch Bolt Spacing Horizontals in
L1 144.500-117.570				1	1	1		
L2 117.570-98.500				1	1	1		
L3 98.500-87.190				1	1	0.966677		
L4 87.190-41.760				1	1	1		
L5 41.760-0.000				1	1	1		

Feed Line/Linear Appurtenances - Entered As Round Or Flat

Description	Face or Leg	Allow Shield	Component Type	Placement ft	Total Number	Number Per Row	Clear Spacing in	Width or Diameter in	Perimeter in	Weight klf
$$$										

Feed Line/Linear Appurtenances - Entered As Area

Description	Face or Leg	Allow Shield	Component Type	Placement ft	Face Offset in	Lateral Offset (Frac FW)	#		C_AA_A ft^2/ft	Weight klf
LDF7-50A(1-5/8")	C	No	Inside Pole	144.500 - 0.000	0.000	0	1	No Ice	0.000	0.001
								1/2" Ice	0.000	0.001

Description	Face or Leg	Allow Shield	Component Type	Placement ft	Face Offset in	Lateral Offset (Frac FW)	#		C_AA_A ft^2/ft	Weight klf
(AB)								1" Ice	0.000	0.001
								2" Ice	0.000	0.001
								4" Ice	0.000	0.001
CR 50 1873(1-5/8") (E)	C	No	Inside Pole	144.500 - 0.000	0.000	0	12	No Ice	0.000	0.001
								1/2" Ice	0.000	0.001
								1" Ice	0.000	0.001
								2" Ice	0.000	0.001
								4" Ice	0.000	0.001
FB-L98B-002-75000(3/8") (E-INSIDE CONDUIT)	C	No	Inside Pole	144.500 - 0.000	0.000	0	3	No Ice	0.000	0.000
								1/2" Ice	0.000	0.000
								1" Ice	0.000	0.000
								2" Ice	0.000	0.000
								4" Ice	0.000	0.000
2" Rigid Conduit (E)	C	No	Inside Pole	144.500 - 0.000	0.000	0	1	No Ice	0.000	0.003
								1/2" Ice	0.000	0.003
								1" Ice	0.000	0.003
								2" Ice	0.000	0.003
								4" Ice	0.000	0.003
$$$ LDF7-50A(1-5/8") (E)	A	No	Inside Pole	135.000 - 0.000	0.000	0	12	No Ice	0.000	0.001
								1/2" Ice	0.000	0.001
								1" Ice	0.000	0.001
								2" Ice	0.000	0.001
								4" Ice	0.000	0.001
HB158-1-08U8-S8J18(1-5/8) (P-Outside)	A	No	CaAa (Out Of Face)	135.000 - 0.000	0.000	0	1	No Ice	0.198	0.001
								1/2" Ice	0.298	0.003
								1" Ice	0.398	0.005
								2" Ice	0.598	0.011
								4" Ice	0.998	0.031
$$$ LDF7-50A(1-5/8") (E-Outside)	B	No	CaAa (Out Of Face)	125.000 - 0.000	0.000	0	1	No Ice	0.198	0.001
								1/2" Ice	0.298	0.002
								1" Ice	0.398	0.004
								2" Ice	0.598	0.011
								4" Ice	0.998	0.030
LDF7-50A(1-5/8") (E-Outside Sheilded)	B	No	CaAa (Out Of Face)	125.000 - 0.000	0.000	0	1	No Ice	0.000	0.001
								1/2" Ice	0.000	0.002
								1" Ice	0.000	0.004
								2" Ice	0.000	0.011
								4" Ice	0.000	0.030
LDF7-50A(1-5/8") (E)	B	No	Inside Pole	125.000 - 0.000	0.000	0	10	No Ice	0.000	0.001
								1/2" Ice	0.000	0.001
								1" Ice	0.000	0.001
								2" Ice	0.000	0.001
								4" Ice	0.000	0.001
MLE Hybrid 9Power/18Fiber RL 2(1 5/8) (R)	B	No	Inside Pole	125.000 - 0.000	0.000	0	1	No Ice	0.000	0.001
								1/2" Ice	0.000	0.001
								1" Ice	0.000	0.001
								2" Ice	0.000	0.001
								4" Ice	0.000	0.001
$$$ HB114-1-08U4-M5J(1 1/4") (E)	C	No	Inside Pole	113.000 - 0.000	0.000	0	3	No Ice	0.000	0.001
								1/2" Ice	0.000	0.001
								1" Ice	0.000	0.001
								2" Ice	0.000	0.001
								4" Ice	0.000	0.001
. *$$$* FXL 780 PE(7/8) (E-Outside Sheilded)	B	No	CaAa (Out Of Face)	100.000 - 0.000	0.000	0	6	No Ice	0.000	0.000
								1/2" Ice	0.000	0.001
								1" Ice	0.000	0.003
								2" Ice	0.000	0.008

Description	Face or Leg	Allow Shield	Component Type	Placement ft	Face Offset in	Lateral Offset (Frac FW)	#		C_AA_A ft^2/ft	Weight klf
								4" Ice	0.000	0.025
840 10414(3/8) (E-Outside Sheilded)	B	No	CaAa (Out Of Face)	100.000 - 0.000	0.000	0	1	No Ice	0.000	0.000
								1/2" Ice	0.000	0.001
								1" Ice	0.000	0.002
								2" Ice	0.000	0.006
								4" Ice	0.000	0.021
$$$ LDF4-50A(1/2") (E-Outside Sheilded)	C	No	Inside Pole	51.000 - 0.000	0.000	0	1	No Ice	0.000	0.000
								1/2" Ice	0.000	0.000
								1" Ice	0.000	0.000
								2" Ice	0.000	0.000
								4" Ice	0.000	0.000
$$$ Safety Line 3/8 (E)	C	No	CaAa (Out Of Face)	144.500 - 0.000	0.000	0	1	No Ice	0.037	0.000
								1/2" Ice	0.137	0.001
								1" Ice	0.238	0.001
								2" Ice	0.437	0.002
								4" Ice	0.838	0.004
$$$ Grounding Line (3/8) (SHIELDED)	C	No	CaAa (Out Of Face)	51.000 - 0.000	0.000	0	1	No Ice	0.000	0.000
								1/2" Ice	0.000	0.001
								1" Ice	0.000	0.001
								2" Ice	0.000	0.002
								4" Ice	0.000	0.004
$$$ Climbing Ladder (Flat) (E)	B	No	CaAa (Out Of Face)	144.500 - 140.000	36.000	0	1	No Ice	0.584	0.005
								1/2" Ice	1.030	0.007
								1" Ice	1.476	0.010
								2" Ice	2.368	0.020
								4" Ice	4.151	0.049
Climbing Ladder (Flat) (E)	B	No	CaAa (Out Of Face)	135.000 - 130.000	36.000	0	1	No Ice	0.584	0.005
								1/2" Ice	1.030	0.007
								1" Ice	1.476	0.010
								2" Ice	2.368	0.020
								4" Ice	4.151	0.049
Climbing Ladder (Flat) (E)	B	No	CaAa (Out Of Face)	125.000 - 120.000	36.000	0	1	No Ice	0.584	0.005
								1/2" Ice	1.030	0.007
								1" Ice	1.476	0.010
								2" Ice	2.368	0.020
								4" Ice	4.151	0.049
Climbing Ladder (Flat) (E)	B	No	CaAa (Out Of Face)	113.000 - 108.000	36.000	0	1	No Ice	0.584	0.005
								1/2" Ice	1.030	0.007
								1" Ice	1.476	0.010
								2" Ice	2.368	0.020
								4" Ice	4.151	0.049
Climbing Ladder (Flat) (E)	B	No	CaAa (Out Of Face)	100.000 - 95.000	36.000	0	1	No Ice	0.584	0.005
								1/2" Ice	1.030	0.007
								1" Ice	1.476	0.010
								2" Ice	2.368	0.020
								4" Ice	4.151	0.049
$$$* *$$$										

Feed Line/Linear Appurtenances Section Areas

Tower Section	Tower Elevation ft	Face	A_R ft^2	A_F ft^2	C_AA_A In Face ft^2	C_AA_A Out Face ft^2	Weight K

Tower Section	Tower Elevation ft	Face	A_R ft²	A_F ft²	C_AA_A In Face ft²	C_AA_A Out Face ft²	Weight K
L1	144.500-117.570	A	0.000	0.000	0.000	3.451	0.194
		B	0.000	0.000	0.000	9.945	0.151
		C	0.000	0.000	0.000	1.010	0.376
L2	117.570-98.500	A	0.000	0.000	0.000	3.776	0.212
		B	0.000	0.000	0.000	7.574	0.242
		C	0.000	0.000	0.000	0.715	0.313
L3	98.500-87.190	A	0.000	0.000	0.000	2.239	0.126
		B	0.000	0.000	0.000	4.285	0.157
		C	0.000	0.000	0.000	0.424	0.195
L4	87.190-41.760	A	0.000	0.000	0.000	8.995	0.506
		B	0.000	0.000	0.000	8.995	0.564
		C	0.000	0.000	0.000	1.704	0.786
L5	41.760-0.000	A	0.000	0.000	0.000	8.268	0.465
		B	0.000	0.000	0.000	8.268	0.518
		C	0.000	0.000	0.000	1.566	0.734

Feed Line/Linear Appurtenances Section Areas - With Ice

Tower Section	Tower Elevation ft	Face or Leg	Ice Thickness in	A_R ft²	A_F ft²	C_AA_A In Face ft²	C_AA_A Out Face ft²	Weight K
L1	144.500-117.570	A	0.885	0.000	0.000	0.000	6.535	0.249
		B		0.000	0.000	0.000	22.694	0.267
		C		0.000	0.000	0.000	5.774	0.402
L2	117.570-98.500	A	0.864	0.000	0.000	0.000	7.149	0.273
		B		0.000	0.000	0.000	16.074	0.415
		C		0.000	0.000	0.000	4.089	0.331
L3	98.500-87.190	A	0.849	0.000	0.000	0.000	4.160	0.160
		B		0.000	0.000	0.000	8.855	0.397
		C		0.000	0.000	0.000	2.345	0.205
L4	87.190-41.760	A	0.812	0.000	0.000	0.000	16.710	0.642
		B		0.000	0.000	0.000	16.710	1.463
		C		0.000	0.000	0.000	9.418	0.835
L5	41.760-0.000	A	0.750	0.000	0.000	0.000	15.051	0.584
		B		0.000	0.000	0.000	15.051	1.299
		C		0.000	0.000	0.000	8.349	0.806

Feed Line Center of Pressure

Section	Elevation ft	CP_X in	CP_Z in	CP_X Ice in	CP_Z Ice in
L1	144.500-117.570	0.342	0.084	0.475	0.240
L2	117.570-98.500	0.369	0.023	0.491	0.139
L3	98.500-87.190	0.355	0.009	0.468	0.117
L4	87.190-41.760	0.183	-0.106	0.154	-0.089
L5	41.760-0.000	0.187	-0.108	0.163	-0.094

Discrete Tower Loads

Description	Face or Leg	Offset Type	Offsets: Horz Lateral Vert ft ft ft	Azimuth Adjustment °	Placement ft		C_AA_A Front ft^2	C_AA_A Side ft^2	Weight K
Lighting Rod 5/8" x 5' (E)	C	None		0.000	147.000	No Ice	0.313	0.313	0.031
						1/2" Ice	0.826	0.826	0.035
						1" Ice	1.322	1.322	0.041
						2" Ice	1.957	1.957	0.065
						4" Ice	3.338	3.338	0.159
Strobe (E)	C	None		0.000	147.000	No Ice	5.250	3.500	0.020
						1/2" Ice	5.565	3.777	0.058
						1" Ice	5.890	4.062	0.100
						2" Ice	6.564	4.658	0.198
						4" Ice	8.015	5.954	0.450
$$$									
(2) 7770.00 w/ Mount Pipe (E)	A	From Leg	4.000 0.000 1.000	0.000	145.000	No Ice	6.119	4.254	0.055
						1/2" Ice	6.626	5.014	0.103
						1" Ice	7.128	5.711	0.157
						2" Ice	8.164	7.155	0.287
						4" Ice	10.360	10.412	0.665
(2) 7770.00 w/ Mount Pipe (E)	B	From Leg	4.000 0.000 1.000	0.000	145.000	No Ice	6.119	4.254	0.055
						1/2" Ice	6.626	5.014	0.103
						1" Ice	7.128	5.711	0.157
						2" Ice	8.164	7.155	0.287
						4" Ice	10.360	10.412	0.665
(2) 7770.00 w/ Mount Pipe (E)	C	From Leg	4.000 0.000 1.000	0.000	145.000	No Ice	6.119	4.254	0.055
						1/2" Ice	6.626	5.014	0.103
						1" Ice	7.128	5.711	0.157
						2" Ice	8.164	7.155	0.287
						4" Ice	10.360	10.412	0.665
P65-17-XLH-RR w/ Mount Pipe (E)	A	From Leg	4.000 0.000 0.000	0.000	145.000	No Ice	11.704	8.938	0.092
						1/2" Ice	12.424	10.450	0.178
						1" Ice	13.153	11.986	0.273
						2" Ice	14.639	14.313	0.498
						4" Ice	17.906	19.144	1.126
AM-X-CD-17-65-00T-RET w/ Mount Pipe (E)	B	From Leg	4.000 0.000 0.000	0.000	145.000	No Ice	11.549	8.938	0.092
						1/2" Ice	12.267	10.450	0.177
						1" Ice	12.995	11.986	0.272
						2" Ice	14.447	14.313	0.496
						4" Ice	17.709	19.144	1.120
SBNH-1D6565C w/ Mount Pipe (E)	C	From Leg	4.000 0.000 0.000	0.000	145.000	No Ice	11.644	9.842	0.094
						1/2" Ice	12.365	11.366	0.183
						1" Ice	13.095	12.914	0.283
						2" Ice	14.553	15.267	0.516
						4" Ice	17.825	20.139	1.160
RRUS 11 (E)	A	From Leg	4.000 0.000 0.000	0.000	145.000	No Ice	3.249	1.373	0.048
						1/2" Ice	3.491	1.551	0.068
						1" Ice	3.741	1.738	0.092
						2" Ice	4.268	2.138	0.150
						4" Ice	5.426	3.042	0.310
RRUS 11 (E)	B	From Leg	4.000 0.000 0.000	0.000	145.000	No Ice	3.249	1.373	0.048
						1/2" Ice	3.491	1.551	0.068
						1" Ice	3.741	1.738	0.092
						2" Ice	4.268	2.138	0.150
						4" Ice	5.426	3.042	0.310
RRUS 11 (E)	C	From Leg	4.000 0.000 0.000	0.000	145.000	No Ice	3.249	1.373	0.048
						1/2" Ice	3.491	1.551	0.068
						1" Ice	3.741	1.738	0.092

Description	Face or Leg	Offset Type	Offsets: Horz Lateral Vert ft ft ft	Azimuth Adjustment °	Placement ft		C_AA_A Front ft^2	C_AA_A Side ft^2	Weight K
						2" Ice	4.268	2.138	0.150
						4" Ice	5.426	3.042	0.310
(2) DUAL BAND 800/1900 FULL BAND MASTHEAD (E)	A	From Leg	4.000 0.000 0.000	0.000	145.000	No Ice	1.549	0.809	0.027
						1/2" Ice	1.718	0.943	0.038
						1" Ice	1.896	1.085	0.052
						2" Ice	2.277	1.396	0.086
						4" Ice	3.143	2.122	0.189
(2) DUAL BAND 800/1900 FULL BAND MASTHEAD (E)	B	From Leg	4.000 0.000 0.000	0.000	145.000	No Ice	1.549	0.809	0.027
						1/2" Ice	1.718	0.943	0.038
						1" Ice	1.896	1.085	0.052
						2" Ice	2.277	1.396	0.086
						4" Ice	3.143	2.122	0.189
(2) DUAL BAND 800/1900 FULL BAND MASTHEAD (E)	C	From Leg	4.000 0.000 0.000	0.000	145.000	No Ice	1.549	0.809	0.027
						1/2" Ice	1.718	0.943	0.038
						1" Ice	1.896	1.085	0.052
						2" Ice	2.277	1.396	0.086
						4" Ice	3.143	2.122	0.189
(2) 782-10250 (E)	A	From Leg	4.000 0.000 0.000	0.000	145.000	No Ice	0.524	0.267	0.006
						1/2" Ice	0.631	0.359	0.010
						1" Ice	0.747	0.460	0.015
						2" Ice	1.005	0.686	0.030
						4" Ice	1.625	1.244	0.085
(2) 782-10250 (E)	B	From Leg	4.000 0.000 0.000	0.000	145.000	No Ice	0.524	0.267	0.006
						1/2" Ice	0.631	0.359	0.010
						1" Ice	0.747	0.460	0.015
						2" Ice	1.005	0.686	0.030
						4" Ice	1.625	1.244	0.085
(2) 782-10250 (E)	C	From Leg	4.000 0.000 0.000	0.000	145.000	No Ice	0.524	0.267	0.006
						1/2" Ice	0.631	0.359	0.010
						1" Ice	0.747	0.460	0.015
						2" Ice	1.005	0.686	0.030
						4" Ice	1.625	1.244	0.085
(2) LGP13519 (E)	A	From Leg	4.000 0.000 0.000	0.000	145.000	No Ice	0.338	0.207	0.005
						1/2" Ice	0.422	0.280	0.008
						1" Ice	0.515	0.362	0.012
						2" Ice	0.726	0.551	0.024
						4" Ice	1.252	1.034	0.071
(2) LGP13519 (E)	B	From Leg	4.000 0.000 0.000	0.000	145.000	No Ice	0.338	0.207	0.005
						1/2" Ice	0.422	0.280	0.008
						1" Ice	0.515	0.362	0.012
						2" Ice	0.726	0.551	0.024
						4" Ice	1.252	1.034	0.071
(2) LGP13519 (E)	C	From Leg	4.000 0.000 0.000	0.000	145.000	No Ice	0.338	0.207	0.005
						1/2" Ice	0.422	0.280	0.008
						1" Ice	0.515	0.362	0.012
						2" Ice	0.726	0.551	0.024
						4" Ice	1.252	1.034	0.071
DC6-48-60-18-8F (E)	B	From Leg	4.000 0.000 0.000	0.000	145.000	No Ice	2.567	4.317	0.019
						1/2" Ice	2.798	4.596	0.050
						1" Ice	3.038	4.885	0.085
						2" Ice	3.543	5.488	0.167
						4" Ice	4.658	6.797	0.383
6' x 2" Mount Pipe (E)	A	From Leg	4.000 0.000 0.000	0.000	145.000	No Ice	1.425	1.425	0.022
						1/2" Ice	1.925	1.925	0.033
						1" Ice	2.294	2.294	0.048
						2" Ice	3.060	3.060	0.090
						4" Ice	4.702	4.702	0.231

Description	Face or Leg	Offset Type	Offsets: Horz Lateral Vert ft ft ft	Azimuth Adjustment °	Placement ft		C_AA_A Front ft^2	C_AA_A Side ft^2	Weight K
6' x 2" Mount Pipe (E)	B	From Leg	4.000 0.000 0.000	0.000	145.000	No Ice 1/2" Ice 1" Ice 2" Ice 4" Ice	1.425 1.925 2.294 3.060 4.702	1.425 1.925 2.294 3.060 4.702	0.022 0.033 0.048 0.090 0.231
6' x 2" Mount Pipe (E)	C	From Leg	4.000 0.000 0.000	0.000	145.000	No Ice 1/2" Ice 1" Ice 2" Ice 4" Ice	1.425 1.925 2.294 3.060 4.702	1.425 1.925 2.294 3.060 4.702	0.022 0.033 0.048 0.090 0.231
Platform Mount [LP 712-1] (E)	C	None		0.000	145.000	No Ice 1/2" Ice 1" Ice 2" Ice 4" Ice	24.530 29.940 35.350 46.170 67.810	24.530 29.940 35.350 46.170 67.810	1.335 1.646 1.956 2.577 3.820
$$$ BXA-171063/8CF w/ Mount Pipe (E)	A	From Leg	4.000 0.000 2.000	0.000	135.000	No Ice 1/2" Ice 1" Ice 2" Ice 4" Ice	3.140 3.515 3.915 4.804 6.715	3.510 4.130 4.757 6.059 9.095	0.029 0.062 0.100 0.196 0.492
BXA-171063/8CF w/ Mount Pipe (E)	B	From Leg	4.000 0.000 2.000	0.000	135.000	No Ice 1/2" Ice 1" Ice 2" Ice 4" Ice	3.140 3.515 3.915 4.804 6.715	3.510 4.130 4.757 6.059 9.095	0.029 0.062 0.100 0.196 0.492
BXA-171063/8CF w/ Mount Pipe (E)	C	From Leg	4.000 0.000 2.000	0.000	135.000	No Ice 1/2" Ice 1" Ice 2" Ice 4" Ice	3.140 3.515 3.915 4.804 6.715	3.510 4.130 4.757 6.059 9.095	0.029 0.062 0.100 0.196 0.492
BXA-70063-6CF-EDIN-0 w/ Mount Pipe (E)	A	From Leg	4.000 0.000 2.000	0.000	135.000	No Ice 1/2" Ice 1" Ice 2" Ice 4" Ice	7.969 8.609 9.216 10.459 13.066	5.801 6.953 7.819 9.601 13.366	0.042 0.103 0.171 0.335 0.804
BXA-70063-6CF-EDIN-0 w/ Mount Pipe (E)	B	From Leg	4.000 0.000 2.000	0.000	135.000	No Ice 1/2" Ice 1" Ice 2" Ice 4" Ice	7.969 8.609 9.216 10.459 13.066	5.801 6.953 7.819 9.601 13.366	0.042 0.103 0.171 0.335 0.804
BXA-70063-6CF-EDIN-0 w/ Mount Pipe (E)	C	From Leg	4.000 0.000 2.000	0.000	135.000	No Ice 1/2" Ice 1" Ice 2" Ice 4" Ice	7.969 8.609 9.216 10.459 13.066	5.801 6.953 7.819 9.601 13.366	0.042 0.103 0.171 0.335 0.804
(2) CBC721-DF (E)	A	From Leg	4.000 0.000 0.000	0.000	135.000	No Ice 1/2" Ice 1" Ice 2" Ice 4" Ice	0.449 0.542 0.644 0.873 1.436	0.120 0.184 0.258 0.430 0.879	0.004 0.007 0.011 0.023 0.070
(2) CBC721-DF (E)	B	From Leg	4.000 0.000 0.000	0.000	135.000	No Ice 1/2" Ice 1" Ice 2" Ice 4" Ice	0.449 0.542 0.644 0.873 1.436	0.120 0.184 0.258 0.430 0.879	0.004 0.007 0.011 0.023 0.070
(2) CBC721-DF	C	From Leg	4.000	0.000	135.000	No Ice	0.449	0.120	0.004

Description	Face or Leg	Offset Type	Offsets: Horz Lateral Vert ft ft ft	Azimuth Adjustment °	Placement ft		C_AA_A Front ft^2	C_AA_A Side ft^2	Weight K
(E)			0.000 0.000			1/2" Ice	0.542	0.184	0.007
						1" Ice	0.644	0.258	0.011
						2" Ice	0.873	0.430	0.023
						4" Ice	1.436	0.879	0.070
(2) FD9R6004/2C-3L	A	From Leg	4.000	0.000	135.000	No Ice	0.367	0.085	0.003
(E)			0.000			1/2" Ice	0.451	0.136	0.005
			2.000			1" Ice	0.543	0.196	0.009
						2" Ice	0.755	0.343	0.020
						4" Ice	1.281	0.740	0.063
(2) FD9R6004/2C-3L	B	From Leg	4.000	0.000	135.000	No Ice	0.367	0.085	0.003
(E)			0.000			1/2" Ice	0.451	0.136	0.005
			2.000			1" Ice	0.543	0.196	0.009
						2" Ice	0.755	0.343	0.020
						4" Ice	1.281	0.740	0.063
(2) FD9R6004/2C-3L	C	From Leg	4.000	0.000	135.000	No Ice	0.367	0.085	0.003
(E)			0.000			1/2" Ice	0.451	0.136	0.005
			2.000			1" Ice	0.543	0.196	0.009
						2" Ice	0.755	0.343	0.020
						4" Ice	1.281	0.740	0.063
HBXX-6517DS-VTM w/	A	From Leg	4.000	0.000	135.000	No Ice	8.976	6.963	0.067
Mount Pipe			0.000			1/2" Ice	9.647	8.182	0.137
(P)			2.000			1" Ice	10.291	9.144	0.215
						2" Ice	11.595	11.022	0.398
						4" Ice	14.321	15.027	0.914
HBXX-6517DS-VTM w/	B	From Leg	4.000	0.000	135.000	No Ice	8.976	6.963	0.067
Mount Pipe			0.000			1/2" Ice	9.647	8.182	0.137
(P)			2.000			1" Ice	10.291	9.144	0.215
						2" Ice	11.595	11.022	0.398
						4" Ice	14.321	15.027	0.914
HBXX-6517DS-VTM w/	C	From Leg	4.000	0.000	135.000	No Ice	8.976	6.963	0.067
Mount Pipe			0.000			1/2" Ice	9.647	8.182	0.137
(P)			2.000			1" Ice	10.291	9.144	0.215
						2" Ice	11.595	11.022	0.398
						4" Ice	14.321	15.027	0.914
LNX-6512DS-VTM w/	A	From Leg	4.000	0.000	135.000	No Ice	5.791	4.501	0.039
Mount Pipe			0.000			1/2" Ice	6.245	5.170	0.087
(P)			2.000			1" Ice	6.709	5.852	0.140
						2" Ice	7.667	7.269	0.269
						4" Ice	9.720	10.366	0.637
LNX-6512DS-VTM w/	B	From Leg	4.000	0.000	135.000	No Ice	5.791	4.501	0.039
Mount Pipe			0.000			1/2" Ice	6.245	5.170	0.087
(P)			2.000			1" Ice	6.709	5.852	0.140
						2" Ice	7.667	7.269	0.269
						4" Ice	9.720	10.366	0.637
LNX-6512DS-VTM w/	C	From Leg	4.000	0.000	135.000	No Ice	5.791	4.501	0.039
Mount Pipe			0.000			1/2" Ice	6.245	5.170	0.087
(P)			2.000			1" Ice	6.709	5.852	0.140
						2" Ice	7.667	7.269	0.269
						4" Ice	9.720	10.366	0.637
RRH2X40-AWS	A	From Leg	4.000	0.000	135.000	No Ice	2.522	1.589	0.044
(P)			0.000			1/2" Ice	2.753	1.795	0.061
			2.000			1" Ice	2.993	2.010	0.082
						2" Ice	3.499	2.465	0.132
						4" Ice	4.615	3.479	0.275
RRH2X40-AWS	B	From Leg	4.000	0.000	135.000	No Ice	2.522	1.589	0.044
(P)			0.000			1/2" Ice	2.753	1.795	0.061
			2.000			1" Ice	2.993	2.010	0.082

Description	Face or Leg	Offset Type	Offsets: Horz Lateral Vert ft ft ft	Azimuth Adjustment °	Placement ft		C_AA_A Front ft^2	C_AA_A Side ft^2	Weight K
						2" Ice	3.499	2.465	0.132
						4" Ice	4.615	3.479	0.275
RRH2X40-AWS	C	From Leg	4.000	0.000	135.000	No Ice	2.522	1.589	0.044
(P)			0.000			1/2" Ice	2.753	1.795	0.061
			2.000			1" Ice	2.993	2.010	0.082
						2" Ice	3.499	2.465	0.132
						4" Ice	4.615	3.479	0.275
DB-T1-6Z-8AB-0Z	A	From Leg	4.000	0.000	135.000	No Ice	5.600	2.333	0.044
(P)			0.000			1/2" Ice	5.915	2.558	0.080
			2.000			1" Ice	6.240	2.791	0.120
						2" Ice	6.914	3.284	0.213
						4" Ice	8.365	4.373	0.455
Platform Mount [LP 712-1]	C	None		0.000	135.000	No Ice	24.530	24.530	1.335
(E)						1/2" Ice	29.940	29.940	1.646
						1" Ice	35.350	35.350	1.956
						2" Ice	46.170	46.170	2.577
						4" Ice	67.810	67.810	3.820
$$$									
ERICSSON AIR 21 B2A	A	From Leg	4.000	0.000	125.000	No Ice	6.904	5.722	0.113
B4P w/ Mount Pipe			0.000			1/2" Ice	7.461	6.628	0.171
(R)			1.000			1" Ice	7.998	7.424	0.236
						2" Ice	9.102	9.069	0.388
						4" Ice	11.440	12.575	0.819
ERICSSON AIR 21 B2A	B	From Leg	4.000	0.000	125.000	No Ice	6.904	5.722	0.113
B4P w/ Mount Pipe			0.000			1/2" Ice	7.461	6.628	0.171
(R)			1.000			1" Ice	7.998	7.424	0.236
						2" Ice	9.102	9.069	0.388
						4" Ice	11.440	12.575	0.819
ERICSSON AIR 21 B2A	C	From Leg	4.000	0.000	125.000	No Ice	6.904	5.722	0.113
B4P w/ Mount Pipe			0.000			1/2" Ice	7.461	6.628	0.171
(R)			1.000			1" Ice	7.998	7.424	0.236
						2" Ice	9.102	9.069	0.388
						4" Ice	11.440	12.575	0.819
ERICSSON AIR 21 B4A	A	From Leg	4.000	0.000	125.000	No Ice	6.904	5.722	0.113
B2P w/ Mount Pipe			0.000			1/2" Ice	7.461	6.628	0.171
(R)			1.000			1" Ice	7.998	7.424	0.236
						2" Ice	9.102	9.069	0.388
						4" Ice	11.440	12.575	0.819
ERICSSON AIR 21 B4A	B	From Leg	4.000	0.000	125.000	No Ice	6.904	5.722	0.113
B2P w/ Mount Pipe			0.000			1/2" Ice	7.461	6.628	0.171
(R)			1.000			1" Ice	7.998	7.424	0.236
						2" Ice	9.102	9.069	0.388
						4" Ice	11.440	12.575	0.819
ERICSSON AIR 21 B4A	C	From Leg	4.000	0.000	125.000	No Ice	6.904	5.722	0.113
B2P w/ Mount Pipe			0.000			1/2" Ice	7.461	6.628	0.171
(R)			1.000			1" Ice	7.998	7.424	0.236
						2" Ice	9.102	9.069	0.388
						4" Ice	11.440	12.575	0.819
KRY 112 144/1	A	From Leg	4.000	0.000	125.000	No Ice	0.408	0.204	0.011
(R)			0.000			1/2" Ice	0.497	0.273	0.014
			1.000			1" Ice	0.594	0.351	0.019
						2" Ice	0.815	0.533	0.032
						4" Ice	1.359	0.999	0.082
KRY 112 144/1	B	From Leg	4.000	0.000	125.000	No Ice	0.408	0.204	0.011
(R)			0.000			1/2" Ice	0.497	0.273	0.014
			1.000			1" Ice	0.594	0.351	0.019
						2" Ice	0.815	0.533	0.032

Description	Face or Leg	Offset Type	Offsets: Horz Lateral Vert ft ft ft	Azimuth Adjustment °	Placement ft		C_AA_A Front ft^2	C_AA_A Side ft^2	Weight K
						4" Ice	1.359	0.999	0.082
KRY 112 144/1	C	From Leg	4.000	0.000	125.000	No Ice	0.408	0.204	0.011
(R)			0.000			1/2" Ice	0.497	0.273	0.014
			1.000			1" Ice	0.594	0.351	0.019
						2" Ice	0.815	0.533	0.032
						4" Ice	1.359	0.999	0.082
Platform Mount [LP 712-1]	C	None		0.000	125.000	No Ice	24.530	24.530	1.335
(E)						1/2" Ice	29.940	29.940	1.646
						1" Ice	35.350	35.350	1.956
						2" Ice	46.170	46.170	2.577
						4" Ice	67.810	67.810	3.820
$$$									
APXVSPP18-C-A20 w/	A	From Leg	4.000	0.000	113.000	No Ice	8.498	6.946	0.083
Mount Pipe			0.000			1/2" Ice	9.149	8.127	0.151
(E)			0.000			1" Ice	9.767	9.021	0.227
						2" Ice	11.031	10.844	0.406
						4" Ice	13.679	14.851	0.909
APXVSPP18-C-A20 w/	B	From Leg	4.000	0.000	113.000	No Ice	8.498	6.946	0.083
Mount Pipe			0.000			1/2" Ice	9.149	8.127	0.151
(E)			0.000			1" Ice	9.767	9.021	0.227
						2" Ice	11.031	10.844	0.406
						4" Ice	13.679	14.851	0.909
APXVSPP18-C-A20 w/	C	From Leg	4.000	0.000	113.000	No Ice	8.498	6.946	0.083
Mount Pipe			0.000			1/2" Ice	9.149	8.127	0.151
(E)			0.000			1" Ice	9.767	9.021	0.227
						2" Ice	11.031	10.844	0.406
						4" Ice	13.679	14.851	0.909
(3) 6' x 2" Mount Pipe	A	From Leg	4.000	0.000	113.000	No Ice	1.425	1.425	0.022
(E)			0.000			1/2" Ice	1.925	1.925	0.033
			0.000			1" Ice	2.294	2.294	0.048
						2" Ice	3.060	3.060	0.090
						4" Ice	4.702	4.702	0.231
(3) 6' x 2" Mount Pipe	B	From Leg	4.000	0.000	113.000	No Ice	1.425	1.425	0.022
(E)			0.000			1/2" Ice	1.925	1.925	0.033
			0.000			1" Ice	2.294	2.294	0.048
						2" Ice	3.060	3.060	0.090
						4" Ice	4.702	4.702	0.231
(3) 6' x 2" Mount Pipe	C	From Leg	4.000	0.000	113.000	No Ice	1.425	1.425	0.022
(E)			0.000			1/2" Ice	1.925	1.925	0.033
			0.000			1" Ice	2.294	2.294	0.048
						2" Ice	3.060	3.060	0.090
						4" Ice	4.702	4.702	0.231
Platform Mount [LP 712-1]	C	None		0.000	113.000	No Ice	24.530	24.530	1.335
(E)						1/2" Ice	29.940	29.940	1.646
						1" Ice	35.350	35.350	1.956
						2" Ice	46.170	46.170	2.577
						4" Ice	67.810	67.810	3.820
$$$									
800MHz 2X50W RRH	A	From Leg	1.000	0.000	111.000	No Ice	2.401	2.254	0.064
W/FILTER			0.000			1/2" Ice	2.613	2.460	0.086
(E)			-2.000			1" Ice	2.833	2.675	0.111
						2" Ice	3.300	3.132	0.172
						4" Ice	4.337	4.148	0.338
800MHz 2X50W RRH	B	From Leg	1.000	0.000	111.000	No Ice	2.401	2.254	0.064
W/FILTER			0.000			1/2" Ice	2.613	2.460	0.086
(E)			-2.000			1" Ice	2.833	2.675	0.111
						2" Ice	3.300	3.132	0.172

Description	Face or Leg	Offset Type	Offsets: Horz Lateral Vert ft ft ft	Azimuth Adjustment °	Placement ft		C_AA_A Front ft^2	C_AA_A Side ft^2	Weight K
						4" Ice	4.337	4.148	0.338
800MHz 2X50W RRH W/FILTER (E)	C	From Leg	1.000 0.000 -2.000	0.000	111.000	No Ice	2.401	2.254	0.064
						1/2" Ice	2.613	2.460	0.086
						1" Ice	2.833	2.675	0.111
						2" Ice	3.300	3.132	0.172
						4" Ice	4.337	4.148	0.338
PCS 1900MHz 4x45W-65MHz (E)	A	From Leg	1.000 0.000 0.000	0.000	111.000	No Ice	2.709	2.611	0.060
						1/2" Ice	2.948	2.847	0.083
						1" Ice	3.195	3.092	0.110
						2" Ice	3.716	3.608	0.173
						4" Ice	4.862	4.744	0.347
PCS 1900MHz 4x45W-65MHz (E)	B	From Leg	1.000 0.000 0.000	0.000	111.000	No Ice	2.709	2.611	0.060
						1/2" Ice	2.948	2.847	0.083
						1" Ice	3.195	3.092	0.110
						2" Ice	3.716	3.608	0.173
						4" Ice	4.862	4.744	0.347
PCS 1900MHz 4x45W-65MHz (E)	C	From Leg	1.000 0.000 0.000	0.000	111.000	No Ice	2.709	2.611	0.060
						1/2" Ice	2.948	2.847	0.083
						1" Ice	3.195	3.092	0.110
						2" Ice	3.716	3.608	0.173
						4" Ice	4.862	4.744	0.347
Side Arm Mount [SO 102-3] (E)	C	None		0.000	111.000	No Ice	3.000	3.000	0.081
						1/2" Ice	3.480	3.480	0.111
						1" Ice	3.960	3.960	0.141
						2" Ice	4.920	4.920	0.201
						4" Ice	6.840	6.840	0.321
$$$									
800 10504 w/ Mount Pipe (E)	A	From Leg	4.000 0.000 2.000	0.000	100.000	No Ice	3.589	3.178	0.038
						1/2" Ice	4.007	3.905	0.070
						1" Ice	4.422	4.581	0.109
						2" Ice	5.339	5.982	0.207
						4" Ice	7.385	8.983	0.514
800 10504 w/ Mount Pipe (E)	B	From Leg	4.000 0.000 2.000	0.000	100.000	No Ice	3.589	3.178	0.038
						1/2" Ice	4.007	3.905	0.070
						1" Ice	4.422	4.581	0.109
						2" Ice	5.339	5.982	0.207
						4" Ice	7.385	8.983	0.514
800 10504 w/ Mount Pipe (E)	C	From Leg	4.000 0.000 2.000	0.000	100.000	No Ice	3.589	3.178	0.038
						1/2" Ice	4.007	3.905	0.070
						1" Ice	4.422	4.581	0.109
						2" Ice	5.339	5.982	0.207
						4" Ice	7.385	8.983	0.514
7'x2" Antenna Mount Pipe (E)	A	From Leg	4.000 0.000 0.000	0.000	100.000	No Ice	1.663	1.663	0.026
						1/2" Ice	2.391	2.391	0.039
						1" Ice	2.825	2.825	0.056
						2" Ice	3.706	3.706	0.105
						4" Ice	5.578	5.578	0.266
7'x2" Antenna Mount Pipe (E)	B	From Leg	4.000 0.000 0.000	0.000	100.000	No Ice	1.663	1.663	0.026
						1/2" Ice	2.391	2.391	0.039
						1" Ice	2.825	2.825	0.056
						2" Ice	3.706	3.706	0.105
						4" Ice	5.578	5.578	0.266
7'x2" Antenna Mount Pipe (E)	C	From Leg	4.000 0.000 0.000	0.000	100.000	No Ice	1.663	1.663	0.026
						1/2" Ice	2.391	2.391	0.039
						1" Ice	2.825	2.825	0.056
						2" Ice	3.706	3.706	0.105
						4" Ice	5.578	5.578	0.266

Description	Face or Leg	Offset Type	Offsets: Horz Lateral Vert ft ft ft	Azimuth Adjustment °	Placement ft		C_AA_A Front ft^2	C_AA_A Side ft^2	Weight K
Platform Mount [LP 712-1]	C	None		0.000	100.000	No Ice	24.530	24.530	1.335
(E)						1/2" Ice	29.940	29.940	1.646
						1" Ice	35.350	35.350	1.956
						2" Ice	46.170	46.170	2.577
						4" Ice	67.810	67.810	3.820
$$$									
KS24019-L112A	C	From Leg	3.000	0.000	51.000	No Ice	0.156	0.156	0.005
(E)			0.000			1/2" Ice	0.225	0.225	0.007
			1.000			1" Ice	0.302	0.302	0.009
						2" Ice	0.484	0.484	0.018
						4" Ice	0.951	0.951	0.056
Side Arm Mount [SO 701-1]	C	From Leg	1.500	0.000	51.000	No Ice	0.850	1.670	0.065
(E)			0.000			1/2" Ice	1.140	2.340	0.079
			0.000			1" Ice	1.430	3.010	0.093
						2" Ice	2.010	4.350	0.121
						4" Ice	3.170	7.030	0.177
$$$									

Load Combinations

Comb. No.	Description
1	Dead Only
2	Dead+Wind 0 deg - No Ice
3	Dead+Wind 30 deg - No Ice
4	Dead+Wind 60 deg - No Ice
5	Dead+Wind 90 deg - No Ice
6	Dead+Wind 120 deg - No Ice
7	Dead+Wind 150 deg - No Ice
8	Dead+Wind 180 deg - No Ice
9	Dead+Wind 210 deg - No Ice
10	Dead+Wind 240 deg - No Ice
11	Dead+Wind 270 deg - No Ice
12	Dead+Wind 300 deg - No Ice
13	Dead+Wind 330 deg - No Ice
14	Dead+Ice+Temp
15	Dead+Wind 0 deg+Ice+Temp
16	Dead+Wind 30 deg+Ice+Temp
17	Dead+Wind 60 deg+Ice+Temp
18	Dead+Wind 90 deg+Ice+Temp
19	Dead+Wind 120 deg+Ice+Temp
20	Dead+Wind 150 deg+Ice+Temp
21	Dead+Wind 180 deg+Ice+Temp
22	Dead+Wind 210 deg+Ice+Temp
23	Dead+Wind 240 deg+Ice+Temp
24	Dead+Wind 270 deg+Ice+Temp
25	Dead+Wind 300 deg+Ice+Temp
26	Dead+Wind 330 deg+Ice+Temp
27	Dead+Wind 0 deg - Service
28	Dead+Wind 30 deg - Service
29	Dead+Wind 60 deg - Service

Comb. No.	Description
30	Dead+Wind 90 deg - Service
31	Dead+Wind 120 deg - Service
32	Dead+Wind 150 deg - Service
33	Dead+Wind 180 deg - Service
34	Dead+Wind 210 deg - Service
35	Dead+Wind 240 deg - Service
36	Dead+Wind 270 deg - Service
37	Dead+Wind 300 deg - Service
38	Dead+Wind 330 deg - Service

Maximum Member Forces

Section No.	Elevation ft	Component Type	Condition	Gov. Load Comb.	Force K	Major Axis Moment kip-ft	Minor Axis Moment kip-ft
L1	144.5 - 117.57	Pole	Max Tension	1	0.000	0.000	0.000
			Max. Compression	14	-14.395	-0.442	0.314
			Max. Mx	5	-6.549	-254.189	0.627
			Max. My	2	-6.504	-0.544	258.297
			Max. Vy	5	16.224	-254.189	0.627
			Max. Vx	2	-16.453	-0.544	258.297
			Max. Torque	3			-0.923
L2	117.57 - 98.5	Pole	Max Tension	1	0.000	0.000	0.000
			Max. Compression	14	-24.256	-0.713	0.254
			Max. Mx	5	-12.803	-706.984	1.080
			Max. My	2	-12.760	-1.110	716.298
			Max. Vy	5	23.989	-706.984	1.080
			Max. Vx	2	-24.222	-1.110	716.298
			Max. Torque	2			-0.808
L3	98.5 - 87.19	Pole	Max Tension	1	0.000	0.000	0.000
			Max. Compression	14	-25.874	-0.911	0.169
			Max. Mx	5	-14.089	-877.807	1.214
			Max. My	2	-14.049	-1.296	888.711
			Max. Vy	5	24.686	-877.807	1.214
			Max. Vx	2	-24.919	-1.296	888.711
			Max. Torque	2			-0.828
L4	87.19 - 41.76	Pole	Max Tension	1	0.000	0.000	0.000
			Max. Compression	14	-37.580	-1.908	-0.523
			Max. Mx	5	-23.756	-2048.493	1.923
			Max. My	8	-23.735	1.718	-2069.591
			Max. Vy	5	28.507	-2048.493	1.923
			Max. Vx	8	28.752	1.718	-2069.591
			Max. Torque	2			-0.886
L5	41.76 - 0	Pole	Max Tension	1	0.000	0.000	0.000
			Max. Compression	14	-53.973	-3.438	-1.222
			Max. Mx	5	-37.839	-3487.711	2.225
			Max. My	8	-37.838	1.852	-3520.135
			Max. Vy	5	31.958	-3487.711	2.225
			Max. Vx	8	32.195	1.852	-3520.135
			Max. Torque	2			-0.778

Maximum Reactions

Location	Condition	Gov. Load Comb.	Vertical K	Horizontal, X K	Horizontal, Z K
Pole	Max. Vert	21	53.973	-0.000	-8.124
	Max. H_x	11	37.867	31.925	-0.007
	Max. H_z	2	37.867	-0.007	32.162
	Max. M_x	2	3520.011	-0.007	32.162
	Max. M_z	5	3487.711	-31.925	0.007
	Max. Torsion	8	0.777	0.007	-32.162
	Min. Vert	1	37.867	0.000	0.000
	Min. H_x	5	37.867	-31.925	0.007
	Min. H_z	8	37.867	0.007	-32.162
	Min. M_x	8	-3520.135	0.007	-32.162
	Min. M_z	11	-3486.834	31.925	-0.007
	Min. Torsion	2	-0.778	-0.007	32.162

Tower Mast Reaction Summary

Load Combination	Vertical K	$Shear_x$ K	$Shear_z$ K	Overturning Moment, M_x kip-ft	Overturning Moment, M_z kip-ft	Torque kip-ft
Dead Only	37.867	0.000	0.000	0.064	-0.421	0.000
Dead+Wind 0 deg - No Ice	37.867	0.007	-32.162	-3520.011	-2.717	0.778
Dead+Wind 30 deg - No Ice	37.867	15.969	-27.856	-3049.580	-1745.986	0.732
Dead+Wind 60 deg - No Ice	37.867	27.652	-16.087	-1762.012	-3021.607	0.490
Dead+Wind 90 deg - No Ice	37.867	31.925	-0.007	-2.225	-3487.711	0.118
Dead+Wind 120 deg - No Ice	37.867	27.645	16.075	1758.188	-3019.346	-0.286
Dead+Wind 150 deg - No Ice	37.867	15.957	27.849	3047.441	-1742.043	-0.613
Dead+Wind 180 deg - No Ice	37.867	-0.007	32.162	3520.135	1.852	-0.777
Dead+Wind 210 deg - No Ice	37.867	-15.969	27.856	3049.699	1745.120	-0.733
Dead+Wind 240 deg - No Ice	37.867	-27.652	16.087	1762.128	3020.735	-0.492
Dead+Wind 270 deg - No Ice	37.867	-31.925	0.007	2.345	3486.834	-0.119
Dead+Wind 300 deg - No Ice	37.867	-27.645	-16.075	-1758.062	3018.470	0.287
Dead+Wind 330 deg - No Ice	37.867	-15.957	-27.849	-3047.312	1741.173	0.615
Dead+Ice+Temp	53.973	0.000	0.000	1.222	-3.438	0.000
Dead+Wind 0 deg+Ice+Temp	53.973	-0.000	-8.124	-917.924	-4.017	0.188
Dead+Wind 30 deg+Ice+Temp	53.973	4.037	-7.036	-794.984	-460.034	0.188
Dead+Wind 60 deg+Ice+Temp	53.973	6.992	-4.062	-458.690	-793.753	0.138
Dead+Wind 90 deg+Ice+Temp	53.973	8.074	0.000	0.848	-915.751	0.051
Dead+Wind 120 deg+Ice+Temp	53.973	6.993	4.062	460.498	-793.339	-0.049
Dead+Wind 150 deg+Ice+Temp	53.973	4.037	7.036	797.095	-459.318	-0.137
Dead+Wind 180 deg+Ice+Temp	53.973	0.000	8.124	920.449	-3.189	-0.188
Dead+Wind 210 deg+Ice+Temp	53.973	-4.037	7.036	797.509	452.828	-0.188
Dead+Wind 240 deg+Ice+Temp	53.973	-6.992	4.062	461.215	786.546	-0.138
Dead+Wind 270 deg+Ice+Temp	53.973	-8.074	-0.000	1.676	908.545	-0.051
Dead+Wind 300 deg+Ice+Temp	53.973	-6.993	-4.062	-457.974	786.133	0.049
Dead+Wind 330 deg+Ice+Temp	53.973	-4.037	-7.036	-794.570	452.112	0.137
Dead+Wind 0 deg - Service	37.867	0.002	-11.129	-1220.240	-1.234	0.273
Dead+Wind 30 deg - Service	37.867	5.525	-9.639	-1057.152	-605.567	0.258
Dead+Wind 60 deg - Service	37.867	9.568	-5.566	-610.781	-1047.760	0.173
Dead+Wind 90 deg - Service	37.867	11.047	-0.002	-0.733	-1209.321	0.042
Dead+Wind 120 deg - Service	37.867	9.566	5.562	609.529	-1046.968	-0.101
Dead+Wind 150 deg - Service	37.867	5.521	9.636	1056.481	-604.194	-0.216
Dead+Wind 180 deg - Service	37.867	-0.002	11.129	1220.361	0.352	-0.273
Dead+Wind 210 deg - Service	37.867	-5.525	9.639	1057.273	604.684	-0.258
Dead+Wind 240 deg - Service	37.867	-9.568	5.566	610.902	1046.876	-0.173
Dead+Wind 270 deg - Service	37.867	-11.047	0.002	0.853	1208.437	-0.042

Load Combination	Vertical K	$Shear_x$ K	$Shear_z$ K	Overturning Moment, M_x kip-ft	Overturning Moment, M_z kip-ft	Torque kip-ft
Dead+Wind 300 deg - Service	37.867	-9.566	-5.562	-609.408	1046.084	0.101
Dead+Wind 330 deg - Service	37.867	-5.521	-9.636	-1056.359	603.311	0.216

Solution Summary

Load Comb.	Sum of Applied Forces PX K	PY K	PZ K	Sum of Reactions PX K	PY K	PZ K	% Error
1	0.000	-37.867	0.000	0.000	37.867	0.000	0.000%
2	0.007	-37.867	-32.162	-0.007	37.867	32.162	0.000%
3	15.969	-37.867	-27.856	-15.969	37.867	27.856	0.000%
4	27.652	-37.867	-16.087	-27.652	37.867	16.087	0.000%
5	31.925	-37.867	-0.007	-31.925	37.867	0.007	0.000%
6	27.645	-37.867	16.075	-27.645	37.867	-16.075	0.000%
7	15.957	-37.867	27.849	-15.957	37.867	-27.849	0.000%
8	-0.007	-37.867	32.162	0.007	37.867	-32.162	0.000%
9	-15.969	-37.867	27.856	15.969	37.867	-27.856	0.000%
10	-27.652	-37.867	16.087	27.652	37.867	-16.087	0.000%
11	-31.925	-37.867	0.007	31.925	37.867	-0.007	0.000%
12	-27.645	-37.867	-16.075	27.645	37.867	16.075	0.000%
13	-15.957	-37.867	-27.849	15.957	37.867	27.849	0.000%
14	0.000	-53.973	0.000	-0.000	53.973	-0.000	0.000%
15	-0.000	-53.973	-8.124	0.000	53.973	8.124	0.000%
16	4.037	-53.973	-7.036	-4.037	53.973	7.036	0.000%
17	6.992	-53.973	-4.062	-6.992	53.973	4.062	0.000%
18	8.074	-53.973	0.000	-8.074	53.973	-0.000	0.000%
19	6.993	-53.973	4.062	-6.993	53.973	-4.062	0.000%
20	4.037	-53.973	7.036	-4.037	53.973	-7.036	0.000%
21	0.000	-53.973	8.124	-0.000	53.973	-8.124	0.000%
22	-4.037	-53.973	7.036	4.037	53.973	-7.036	0.000%
23	-6.992	-53.973	4.062	6.992	53.973	-4.062	0.000%
24	-8.074	-53.973	-0.000	8.074	53.973	0.000	0.000%
25	-6.993	-53.973	-4.062	6.993	53.973	4.062	0.000%
26	-4.037	-53.973	-7.036	4.037	53.973	7.036	0.000%
27	0.002	-37.867	-11.129	-0.002	37.867	11.129	0.000%
28	5.525	-37.867	-9.639	-5.525	37.867	9.639	0.000%
29	9.568	-37.867	-5.566	-9.568	37.867	5.566	0.000%
30	11.047	-37.867	-0.002	-11.047	37.867	0.002	0.000%
31	9.566	-37.867	5.562	-9.566	37.867	-5.562	0.000%
32	5.521	-37.867	9.636	-5.521	37.867	-9.636	0.000%
33	-0.002	-37.867	11.129	0.002	37.867	-11.129	0.000%
34	-5.525	-37.867	9.639	5.525	37.867	-9.639	0.000%
35	-9.568	-37.867	5.566	9.568	37.867	-5.566	0.000%
36	-11.047	-37.867	0.002	11.047	37.867	-0.002	0.000%
37	-9.566	-37.867	-5.562	9.566	37.867	5.562	0.000%
38	-5.521	-37.867	-9.636	5.521	37.867	9.636	0.000%

Non-Linear Convergence Results

Load Combination	Converged?	Number of Cycles	Displacement Tolerance	Force Tolerance
1	Yes	4	0.00000001	0.00000001
2	Yes	5	0.00000001	0.00007459

3	Yes	6	0.00000001	0.00011955
4	Yes	6	0.00000001	0.00011678
5	Yes	4	0.00000001	0.00036272
6	Yes	6	0.00000001	0.00011692
7	Yes	6	0.00000001	0.00011911
8	Yes	5	0.00000001	0.00006059
9	Yes	6	0.00000001	0.00011630
10	Yes	6	0.00000001	0.00011878
11	Yes	4	0.00000001	0.00051454
12	Yes	6	0.00000001	0.00011818
13	Yes	6	0.00000001	0.00011627
14	Yes	4	0.00000001	0.00002164
15	Yes	5	0.00000001	0.00049707
16	Yes	5	0.00000001	0.00083469
17	Yes	5	0.00000001	0.00082253
18	Yes	5	0.00000001	0.00049435
19	Yes	5	0.00000001	0.00082292
20	Yes	5	0.00000001	0.00083201
21	Yes	5	0.00000001	0.00049747
22	Yes	5	0.00000001	0.00081465
23	Yes	5	0.00000001	0.00082264
24	Yes	5	0.00000001	0.00049039
25	Yes	5	0.00000001	0.00081725
26	Yes	5	0.00000001	0.00081229
27	Yes	4	0.00000001	0.00039152
28	Yes	5	0.00000001	0.00029267
29	Yes	5	0.00000001	0.00027968
30	Yes	4	0.00000001	0.00019135
31	Yes	5	0.00000001	0.00027937
32	Yes	5	0.00000001	0.00028986
33	Yes	4	0.00000001	0.00037052
34	Yes	5	0.00000001	0.00027778
35	Yes	5	0.00000001	0.00028765
36	Yes	4	0.00000001	0.00019582
37	Yes	5	0.00000001	0.00028462
38	Yes	5	0.00000001	0.00027723

Maximum Tower Deflections - Service Wind

Section No.	Elevation ft	Horz. Deflection in	Gov. Load Comb.	Tilt °	Twist °
L1	144.5 - 117.57	38.647	27	2.432	0.004
L2	121.43 - 98.5	27.279	27	2.200	0.002
L3	98.5 - 87.19	17.653	27	1.749	0.001
L4	91.48 - 41.76	15.168	27	1.631	0.001
L5	47.54 - 0	3.932	33	0.767	0.000

Critical Deflections and Radius of Curvature - Service Wind

Elevation ft	Appurtenance	Gov. Load Comb.	Deflection in	Tilt °	Twist °	Radius of Curvature ft
147.000	Lighting Rod 5/8" x 5'	27	38.647	2.432	0.004	15615
145.000	(2) 7770.00 w/ Mount Pipe	27	38.647	2.432	0.004	15615
135.000	BXA-171063/8CF w/ Mount Pipe	27	33.858	2.360	0.003	8218

Elevation ft	Appurtenance	Gov. Load Comb.	Deflection in	Tilt °	Twist °	Radius of Curvature ft
125.000	ERICSSON AIR 21 B2A B4P w/ Mount Pipe	27	28.962	2.253	0.002	4005
113.000	APXVSPP18-C-A20 w/ Mount Pipe	27	23.487	2.043	0.002	2986
111.000	800MHz 2X50W RRH W/FILTER	27	22.628	2.001	0.001	2905
100.000	800 10504 w/ Mount Pipe	27	18.212	1.776	0.001	2570
51.000	KS24019-L112A	33	4.514	0.834	0.000	2530

Maximum Tower Deflections - Design Wind

Section No.	Elevation ft	Horz. Deflection in	Gov. Load Comb.	Tilt °	Twist °
L1	144.5 - 117.57	111.181	2	6.999	0.013
L2	121.43 - 98.5	78.526	2	6.334	0.006
L3	98.5 - 87.19	50.849	2	5.037	0.003
L4	91.48 - 41.76	43.698	2	4.699	0.003
L5	47.54 - 0	11.338	8	2.212	0.001

Critical Deflections and Radius of Curvature - Design Wind

Elevation ft	Appurtenance	Gov. Load Comb.	Deflection in	Tilt °	Twist °	Radius of Curvature ft
147.000	Lighting Rod 5/8" x 5'	2	111.181	6.999	0.013	5579
145.000	(2) 7770.00 w/ Mount Pipe	2	111.181	6.999	0.013	5579
135.000	BXA-171063/8CF w/ Mount Pipe	2	97.426	6.794	0.010	2935
125.000	ERICSSON AIR 21 B2A B4P w/ Mount Pipe	2	83.362	6.485	0.007	1428
113.000	APXVSPP18-C-A20 w/ Mount Pipe	2	67.627	5.882	0.005	1060
111.000	800MHz 2X50W RRH W/FILTER	2	65.158	5.762	0.004	1030
100.000	800 10504 w/ Mount Pipe	2	52.458	5.116	0.003	907
51.000	KS24019-L112A	8	13.015	2.405	0.001	880

Compression Checks

Pole Design Data

Section No.	Elevation ft	Size	L ft	L_u ft	Kl/r	F_a ksi	A in^2	Actual P K	Allow. P_a K	Ratio $\frac{P}{P_a}$
L1	144.5 - 117.57 (1)	TP26.875x21x0.188	26.930	0.000	0.0	39.000	15.381	-6.504	599.869	0.011
L2	117.57 - 98.5 (2)	TP30.575x25.658x0.25	22.930	0.000	0.0	39.000	24.063	-12.761	938.446	0.014
L3	98.5 - 87.19 (3)	TP33x30.575x0.399	11.310	0.000	0.0	27.943	40.124	-14.049	1121.190	0.013
L4	87.19 - 41.76 (4)	TP42.219x31.282x0.375	49.720	0.000	0.0	39.000	48.291	-23.735	1883.360	0.013
L5	41.76 - 0 (5)	TP50.5x40.197x0.438	47.540	0.000	0.0	39.000	69.518	-37.838	2711.200	0.014

Section No.	Elevation ft	Size	L ft	L_u ft	Kl/r	F_a ksi	A in^2	Actual P K	Allow. P_a K	Ratio $\frac{P}{P_a}$

Pole Bending Design Data

Section No.	Elevation ft	Size	Actual M_x kip-ft	Actual f_{bx} ksi	Allow. F_{bx} ksi	Ratio $\frac{f_{bx}}{F_{bx}}$	Actual M_y kip-ft	Actual f_{by} ksi	Allow. F_{by} ksi	Ratio $\frac{f_{by}}{F_{by}}$
L1	144.5 - 117.57 (1)	TP26.875x21x0.188	258.298	31.578	39.000	0.810	0.000	0.000	39.000	0.000
L2	117.57 - 98.5 (2)	TP30.575x25.658x0.25	716.299	47.756	39.000	1.224	0.000	0.000	39.000	0.000
L3	98.5 - 87.19 (3)	TP33x30.575x0.399	888.708	34.159	27.943	1.222	0.000	0.000	27.943	0.000
L4	87.19 - 41.76 (4)	TP42.219x31.282x0.375	2069.592	51.438	39.000	1.319	0.000	0.000	39.000	0.000
L5	41.76 - 0 (5)	TP50.5x40.197x0.438	3520.133	49.231	39.000	1.262	0.000	0.000	39.000	0.000

Pole Shear Design Data

Section No.	Elevation ft	Size	Actual V K	Actual f_v ksi	Allow. F_v ksi	Ratio $\frac{f_v}{F_v}$	Actual T kip-ft	Actual f_{vt} ksi	Allow. F_{vt} ksi	Ratio $\frac{f_{vt}}{F_{vt}}$
L1	144.5 - 117.57 (1)	TP26.875x21x0.188	16.453	1.070	26.000	0.082	0.745	0.044	26.000	0.002
L2	117.57 - 98.5 (2)	TP30.575x25.658x0.25	24.222	1.007	26.000	0.077	0.808	0.026	26.000	0.001
L3	98.5 - 87.19 (3)	TP33x30.575x0.399	24.919	0.621	18.629	0.067	0.828	0.015	18.629	0.001
L4	87.19 - 41.76 (4)	TP42.219x31.282x0.375	28.752	0.595	26.000	0.046	0.710	0.009	26.000	0.000
L5	41.76 - 0 (5)	TP50.5x40.197x0.438	32.195	0.463	26.000	0.036	0.777	0.005	26.000	0.000

Pole Interaction Design Data

Section No.	Elevation ft	Ratio $\frac{P}{P_a}$	Ratio $\frac{f_{bx}}{F_{bx}}$	Ratio $\frac{f_{by}}{F_{by}}$	Ratio $\frac{f_v}{F_v}$	Ratio $\frac{f_{vt}}{F_{vt}}$	Comb. Stress Ratio	Allow. Stress Ratio	Criteria
L1	144.5 - 117.57 (1)	0.011	0.810	0.000	0.082	0.002	0.822 ✓	1.333	H1-3+VT ✓
L2	117.57 - 98.5 (2)	0.014	1.224	0.000	0.077	0.001	1.240 ✓	1.333	H1-3+VT ✓
L3	98.5 - 87.19 (3)	0.013	1.222	0.000	0.067	0.001	1.236 ✓	1.333	H1-3+VT ✓
L4	87.19 - 41.76 (4)	0.013	1.319	0.000	0.046	0.000	1.332 ✓	1.333	H1-3+VT ✓
L5	41.76 - 0 (5)	0.014	1.262	0.000	0.036	0.000	1.277 ✓	1.333	H1-3+VT ✓

Section Capacity Table

Section No.	Elevation ft	Component Type	Size	Critical Element	P K	$SF*P_{allow}$ K	% Capacity	Pass Fail
L1	144.5 - 117.57	Pole	TP26.875x21x0.188	1	-6.504	799.625	61.5*	Pass
L2	117.57 - 98.5	Pole	TP30.575x25.658x0.25	2	-12.761	1250.948	92.8*	Pass
L3	98.5 - 87.19	Pole	TP33x30.575x0.399	3	-14.049	1494.546	90.3*	Pass
L4	87.19 - 41.76	Pole	TP42.219x31.282x0.375	4	-23.735	2510.519	99.6*	Pass
L5	41.76 - 0	Pole	TP50.5x40.197x0.438	5	-37.838	3614.029	95.7*	Pass
							Summary	
						Pole (L4)	99.6*	Pass
						RATING =	**99.6***	**Pass**

***Check additional calculations**

Program Version 6.1.4.1 - 12/17/2013

APPENDIX B

BASE LEVEL DRAWING

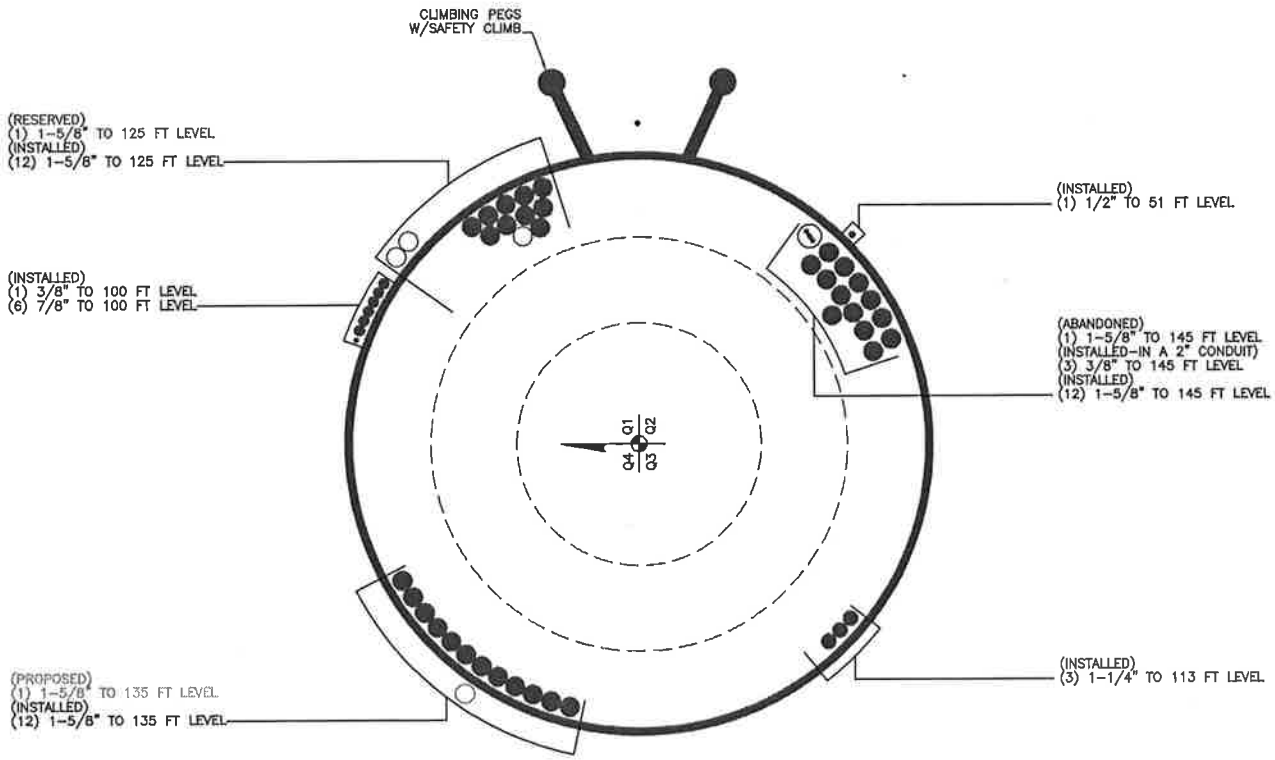

BUSINESS UNIT: 881533

APPENDIX C

ADDITIONAL CALCULATIONS

Reinforcement 1						
Bottom	Top	QTY	Type	Position	Gap	Ten/Comp
91.4	98.5	3	CI-XFP-0451(	F	0	T&C
				F	0	T&C
				F	0	T&C
				F	0	T&C
				F	0	T&C
				F	0	T&C
				F	0	T&C
				F	0	T&C
				F	0	T&C

Reinforcement 2						
Bottom	Top	QTY	Type	Position	Gap	Ten/Comp
0				F	0	T&C
				F	0	T&C
				F	0	T&C
				F	0	T&C
				F	0	T&C
				F	0	T&C
				F	0	T&C
				F	0	T&C
				F	0	T&C

Reinforcement 3						
Bottom	Top	QTY	Type	Position	Gap	Ten/Comp
0				F	0	T&C
				F	0	T&C
				F	0	T&C
				F	0	T&C
				F	0	T&C
				F	0	T&C
				F	0	T&C
				F	0	T&C
				F	0	T&C

Bottom Elevation	Top Elevation	Original Thickness	Original Yield Stress	Original Ultimate Stress	Reinforced Shaft Capacity	Reinf. 1 QTY	Reinf. 1 Type	Rein. 1 Capacity	Reinf. 2 QTY	Reinf. 2 Type	Rein. 2 Capacity	Reinf. 3 QTY	Reinf. 3 Type	Rein. 3 Capacity	Control Stress Ratio	Top Height	Section Length	Lap Splice	# of Sides	Top Diameter	Bottom Diameter	Equivalent Shaft Thickness	Equivalent Shaft Fy	Equivalent Weight Mult.		Bottom Elevation Failure	Top Elevation Failure	Section Failure %
117.5700	144.5000	0.1875	65	80	61.5%										**61.5%**	144.5000	26.9300	3.8600	18	21.0000	26.8750	0.1875	65.0	1.00	1			
98.5000	121.4300	0.2500	65	80	92.8%										**92.8%**	121.4300	22.9300	0.0000	18	25.6579	30.5748	0.2500	65.0	1.00	2			
87.1900	98.5000	0.2500	65	80	65.7%	3	CI-XFP-0451(	90.3%							**90.3%**	98.5000	11.3100	4.2900	18	30.5748	33.0000	0.3990	46.6	0.97	3			
41.7600	91.4800	0.3750	65	80	99.6%										**99.6%**	91.4800	49.7200	5.7800	18	31.5801	42.2188	0.3750	65.0	1.00	4			
0.0000	47.5400	0.4375	65	80	95.7%										**95.7%**	47.5400	47.5400	0.0000	18	40.2320	50.5000	0.4375	65.0	1.00	5			
																									6			
																									7			
																									8			
																									9			
																									10			
																									11			
																									12			
																									13			
																									14			
																									15			
																									16			
																									17			
																									18			
																									19			
																									20			
																									21			
																									22			
																									23			
																									24			
																									25			
																									26			
																									27			
																									28			
																									29			
																									30			

Reinforcement Capacity

AeroSolutions LLC
5500 Flatirons Parkway, Suite 100
Boulder, CO 80301
720-304-6882

Dimensions and Properties														Compression				Axial				
																		ASD-9			LRFD	
Model	Weight (lb/ft)	Area (in^2)	Moment of Inertia (in^4)	Moment of Inertia (in^4)	Centroid from Mating Edge (in)	Centroid from Bolt Hole Center (in)	Web Thickness (in)	Width (in)	Flange Width (in)	Flange Thickness (in)	Hole Diameter (in)	Yield Stress (ksi)	Ultimate Stress (ksi)	Slender. Ratio Coefficient	Unbraced Length (in)	Slender. Ratio Coefficient	Unbraced Length (in)	Allowable Axial (kip)	Allowable Axial w/ increase (kip)	Governing Axial	Design Axial Strength (kip)	Governing Axial
CCI-XFP-045100	15.3	4.50	0.38	7.59	0.5	0	1	4.5	0	0	1.1875	65	80	0.80	20	1.00	20	129.7	172.9	Compress.	195.0	Rupture

Rein1

Bottom	Top	Qty	Model	Position	T or T&C
91.4	98.5	3	FP-045100	F	T&C
				F	T&C
				F	T&C
				F	T&C
				F	T&C
				F	T&C
				F	T&C
				F	T&C
				F	T&C

Flats (Used for relative orientation only. Actual flat numbers may vary.)

1	2	3	4	5	6	7	8	9	10	11	12	13	14	15	16	17	18
	1						1						1				

Rein2

Bottom	Top	Qty	Model	Position	T or T&C
	0			F	T&C
				F	T&C
				F	T&C
				F	T&C
				F	T&C
				F	T&C
				F	T&C
				F	T&C
				F	T&C

Rein3

Bottom	Top	Qty	Model	Position	T or T&C
	0			F	T&C
				F	T&C
				F	T&C
				F	T&C
				F	T&C
				F	T&C
				F	T&C
				F	T&C
				F	T&C

Stiffened or Unstiffened, Ungrouted, Circular Base Plate - Any Rod Material

TIA Rev F

Site Data

BU#: *881533*
Site Name: *GROTON TOWER*
App #: *219527; Rev# 8*

Pole Manufacturer:	*Other*

Reactions		
Moment:	3520.1358	ft-kips
Axial:	37.8383	kips
Shear:	32.195001	kips

Anchor Rod Data		
Qty:	16	
Diam:	2.25	in
Rod Material:	A615-J	
Strength (Fu):	100	ksi
Yield (Fy):	75	ksi
Bolt Circle:	59	in

Plate Data		
Diam:	65	in
Thick:	2	in
Grade:	60	ksi
Single-Rod B-eff:	10.02	in

Stiffener Data (Welding at both sides)		
Config:	1	*
Weld Type:	Fillet	
Groove Depth:		<-- Disregard
Groove Angle:		<-- Disregard
Fillet H. Weld:	0.625	in
Fillet V. Weld:	0.375	in
Width:	6.75	in
Height:	17.75	in
Thick:	0.625	in
Notch:	0.75	in
Grade:	50	ksi
Weld str.:	70	ksi

Pole Data		
Diam:	50.5	in
Thick:	0.4375	in
Grade:	65	ksi
# of Sides:	18	"0" IF Round
Fu	80	ksi
Reinf. Fillet Weld	0	"0" if None

Stress Increase Factor		
ASIF:	1.333	

If No stiffeners, Criteria:	AISC ASD	<-Only Applcable to Unstiffened Cases

Anchor Rod Results

		Stiffened
Maximum Rod Tension:	176.6 Kips	Service, ASD
Allowable Tension:	195.0 Kips	Fty*ASIF
Anchor Rod Stress Ratio:	90.6%	

Base Plate Results

	Flexural Check	Stiffened
Base Plate Stress:	45.8 ksi	Service, ASD
Allowable Plate Stress:	60.0 ksi	0.75*Fy*ASIF
Base Plate Stress Ratio:	76.4%	Y.L. Length: N/A, Roark

Stiffener Results

Horizontal Weld :	69.4%
Vertical Weld:	45.5%
Plate Flex+Shear, fb/Fb+(fv/Fv)^2:	26.0%
Plate Tension+Shear, ft/Ft+(fv/Fv)^2:	75.1%
Plate Comp. (AISC Bracket):	80.4%

Pole Results

Pole Punching Shear Check:	11.6%

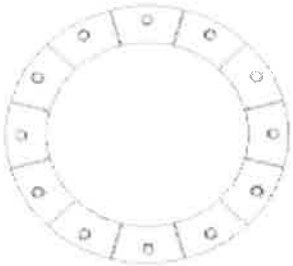

* 0 = none, 1 = every bolt, 2 = every 2 bolts, 3 = 2 per bolt

** Note: for complete joint penetration groove welds the groove depth must be exactly 1/2 the stiffener thickness for calculation purposes

PROJECT	**881533 - GROTON TOWER,CT**				
SUBJECT	**Foundation Analysis**				
DATE	**05/16/14**	PAGE	1	OF	1

B+T GRP
1717 S. Boulder, Suite 300
Tulsa, OK 74159
(918) 587-4630

Monopole Pad & Pier Foundation Analysis

Rev. Type: F

Design Loads:

	Input unfactored loads	
Shear:	32.0	kips
Moment:	3,520.0	ft-kips
Tower Height:	144.5	ft
Tower Weight:	38.0	kips

Pad & Pier Dimensions / Properties:

Pole Diameter at Base:	50.50	in
Bearing Depth:	5.0	ft
Pad Width:	30.0	ft
Neglected Depth:	3.3	ft
Thickness:	5.0	ft
Pier Diameter:	0.0	ft
Pier Height Above Grade:	0.0	ft
BP Dist. Above Pier:	0.0	in
Clear Cover:	4.0	in
Pad Rebar Size:	8	
Pad Rebar Quanity:	44	
Rebar Yield Strength:	60000	psi
Concrete Strength:	4000	psi
Concrete Unit Weight:	0.15	kcf

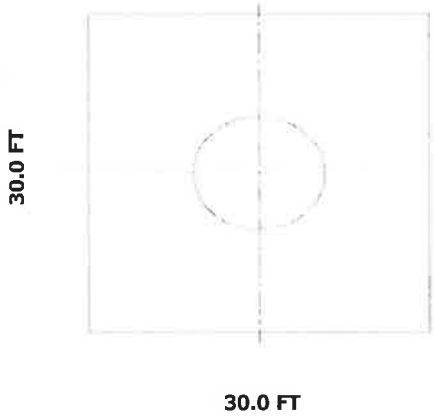

Soil Data:

	Allowable Values	
Soil Unit Weight:	0.120	kcf
Ult. Bearing Capacity:	24.000	ksf
Angle of Friction:	30.000	deg
Cohesion:	0.000	ksf
Passive Pressure:	0.000	ksf
Base Friction:	0.200	

** Notes:

Summary of Results

Overturning	52.2%
Shear Capacity	44.9%
Bearing	9.9%
Pad Shear - 1-way	28.3%
Pad Shear - 2-way	2.7%
Pad Moment Capacity	30.2%