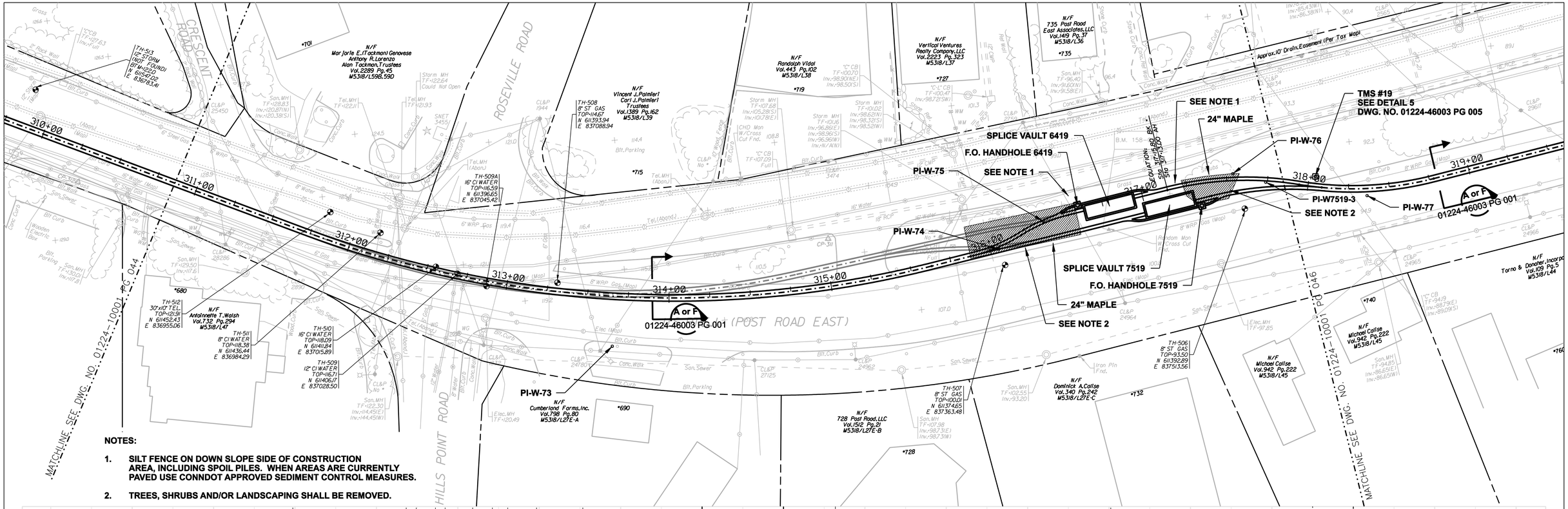

NOTES:

1. SILT FENCE ON DOWN SLOPE SIDE OF CONSTRUCTION AREA, INCLUDING SPOIL PILES. WHEN AREAS ARE CURRENTLY PAVED USE CONNDOT APPROVED SEDIMENT CONTROL MEASURES.
2. TREES, SHRUBS AND/OR LANDSCAPING SHALL BE REMOVED.

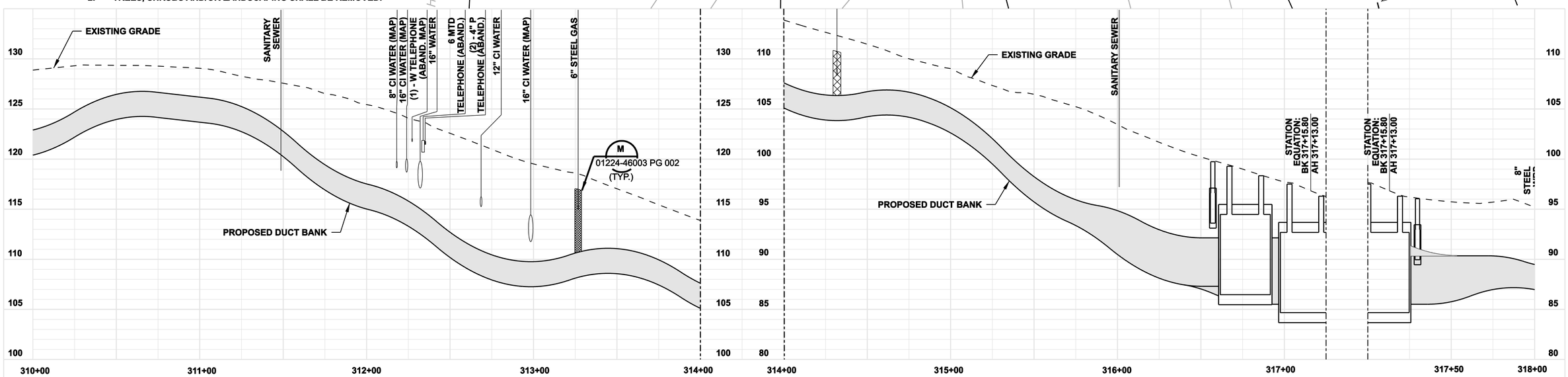

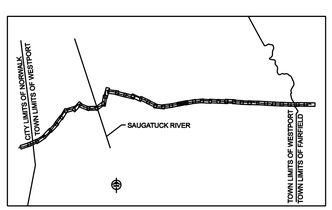

NORTH

0 30' 60'
HORIZONTAL SCALE IN FEET
0 5' 10'
VERTICAL SCALE IN FEET

DOCKET No. 272

ISSUED FOR CONSTRUCTION

no.	date	revisions	by	chk
1	5/10/07	ISSUED CSC REVISED	CTC	

Burns & McDonnell
SINCE 1898

date 11/10/05
detailed L. ROWSE
designed C. COURTRIGHT
checked S. NEWLAND

MF	NO.	DATE	REVISIONS	BY	CHK	APP	APP

NORTHEAST UTILITIES SERVICE CO.

FOR THE CONNECTICUT LIGHT & POWER COMPANY

TITLE MIDDLETOWN–NORWALK 345kV TRANSMISSION PROJECT

TOWN OF WESTPORT
PLAN AND PROFILE Sta. 310+00 to 318+00

3

BY SEN-BMCD	CHKD	APP	APP
DATE 11-10-05	DATE	DATE	DATE
SCALE AS NOTED	D	DWG. NO. 01224-10001 PG 045	

COPYRIGHT © 2007 BURNS & McDONNELL ENGINEERING COMPANY, INC.

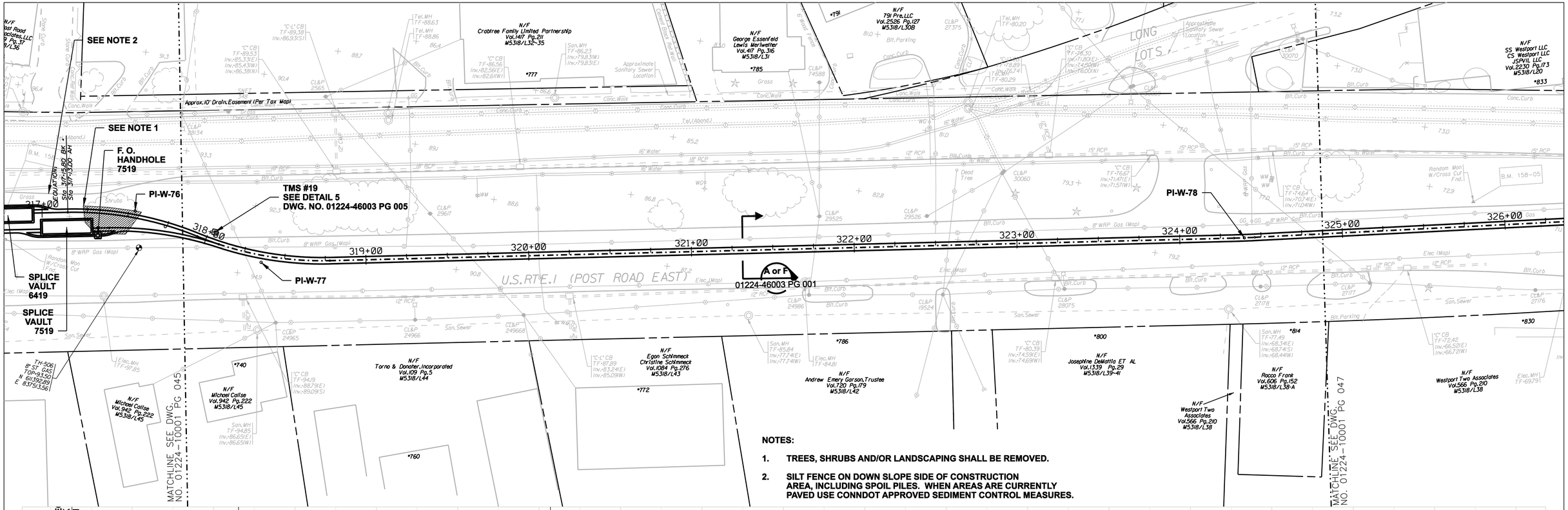

NOTES:

1. TREES, SHRUBS AND/OR LANDSCAPING SHALL BE REMOVED.
2. SILT FENCE ON DOWN SLOPE SIDE OF CONSTRUCTION AREA, INCLUDING SPOIL PILES. WHEN AREAS ARE CURRENTLY PAVED USE CONNDOT APPROVED SEDIMENT CONTROL MEASURES.

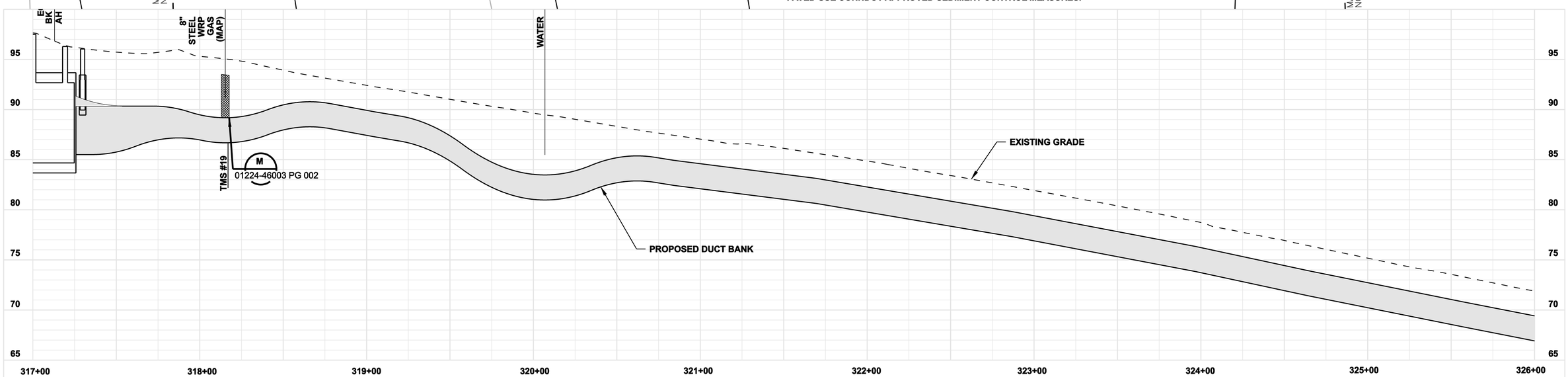

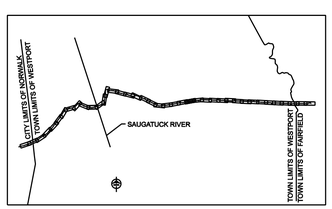

NORTH

0 30' 60'
HORIZONTAL SCALE IN FEET
0 5' 10'
VERTICAL SCALE IN FEET

ISSUED FOR CONSTRUCTION

DOCKET No. 272

no.	date	revisions	by	chk
1	5/10/07	ISSUED CSC REVISED	CTC	

Burns & McDonnell SINCE 1898

date 11/10/05 | detailed L. ROWSE
designed C. COURTRIGHT | checked S. NEWLAND

MF	NO.	DATE	REVISIONS	BY	CHK	APP	APP

NORTHEAST UTILITIES SERVICE CO.

FOR THE CONNECTICUT LIGHT & POWER COMPANY

TITLE MIDDLETOWN–NORWALK 345kV TRANSMISSION PROJECT

TOWN OF WESTPORT
PLAN AND PROFILE Sta. 317+00 to 326+00

BY SEN–BMCD	CHKD	APP	APP
DATE 11–10–05	DATE	DATE	DATE
SCALE AS NOTED	D	DWG. NO. 01224–10001 PG 046	

COPYRIGHT © 2007 BURNS & McDONNELL ENGINEERING COMPANY, INC.

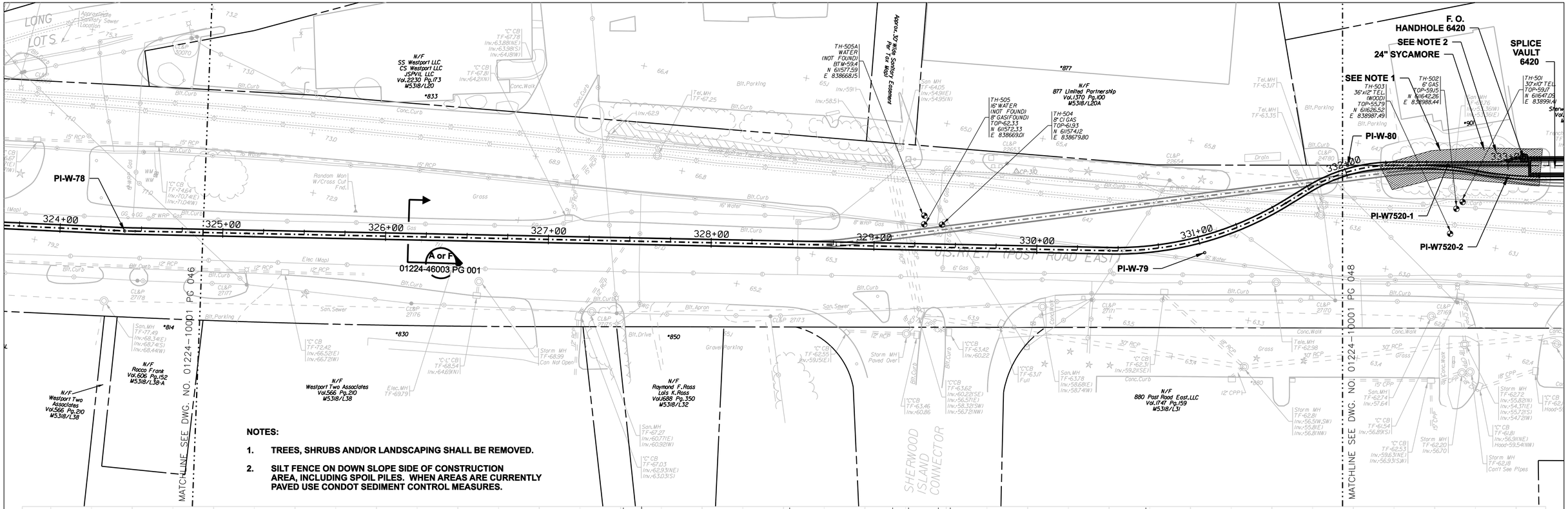

NOTES:

1. TREES, SHRUBS AND/OR LANDSCAPING SHALL BE REMOVED.
2. SILT FENCE ON DOWN SLOPE SIDE OF CONSTRUCTION AREA, INCLUDING SPOIL PILES. WHEN AREAS ARE CURRENTLY PAVED USE CONDOT SEDIMENT CONTROL MEASURES.

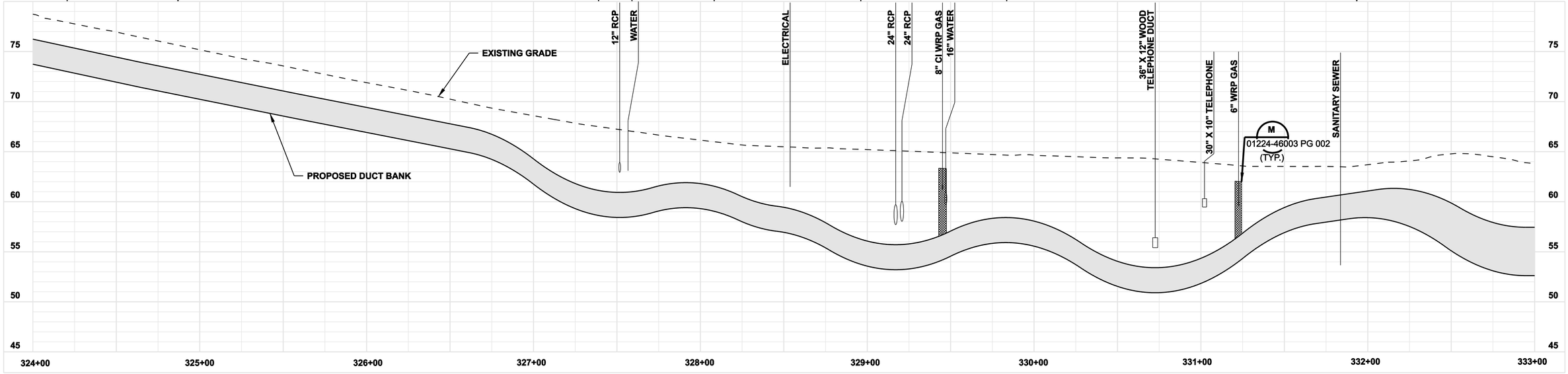

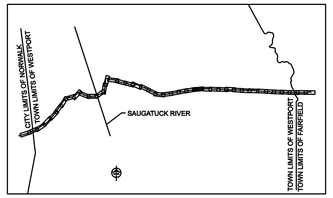

NORTH

0 30' 60'
HORIZONTAL SCALE IN FEET
0 5' 10'
VERTICAL SCALE IN FEET

ISSUED FOR CONSTRUCTION

DOCKET No. 272

no.	date	revisions	by	chk
1	5/10/07	ISSUED CSC REVISED	CTC	

Burns & McDonnell SINCE 1898

date 11/10/05 | detailed L. ROWSE
designed C. COURTRIGHT | checked S. NEWLAND

MF	NO.	DATE	REVISIONS	BY	CHK	APP	APP

NORTHEAST UTILITIES SERVICE CO.

FOR THE CONNECTICUT LIGHT & POWER COMPANY

TITLE MIDDLETOWN–NORWALK 345kV TRANSMISSION PROJECT

TOWN OF WESTPORT
PLAN AND PROFILE Sta. 324+00 to 333+00

BY SEN-BMCD	CHKD	APP	APP
DATE 11-10-05	DATE	DATE	DATE
SCALE AS NOTED	D	DWG. NO. 01224-10001 PG 047	

COPYRIGHT © 2007 BURNS & McDONNELL ENGINEERING COMPANY, INC.

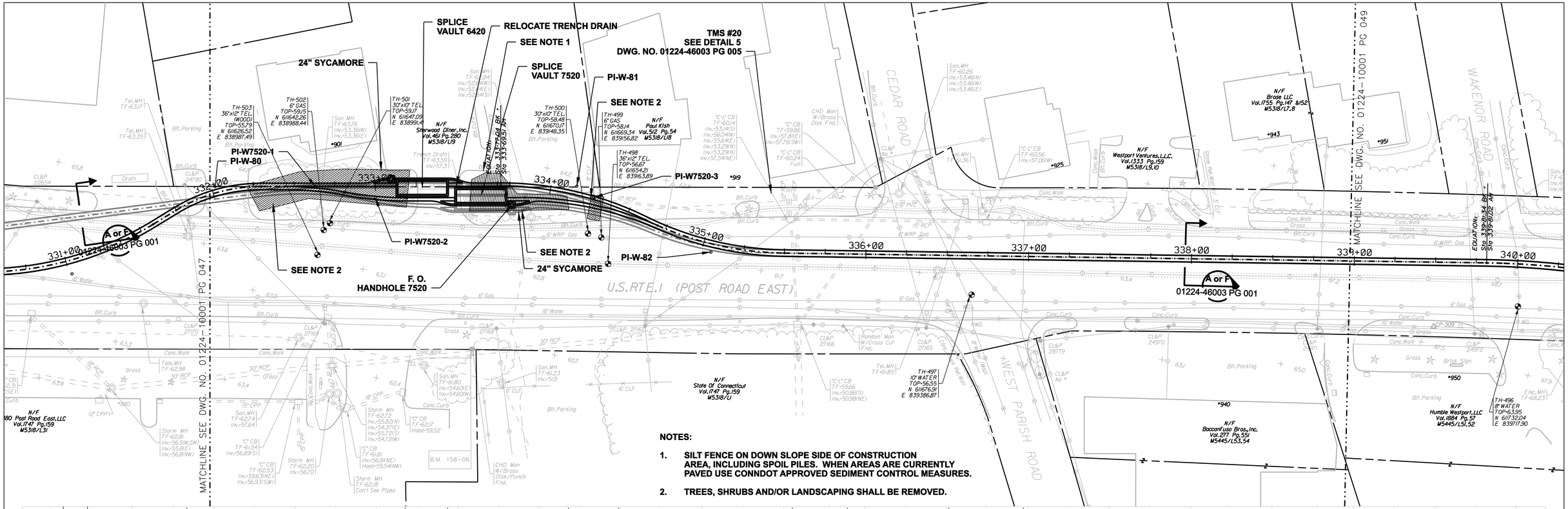

NOTES:

1. SILT FENCE ON DOWN SLOPE SIDE OF CONSTRUCTION AREA, INCLUDING SPOIL PILES. WHEN AREAS ARE CURRENTLY PAVED USE CONNDOT APPROVED SEDIMENT CONTROL MEASURES.
2. TREES, SHRUBS AND/OR LANDSCAPING SHALL BE REMOVED.

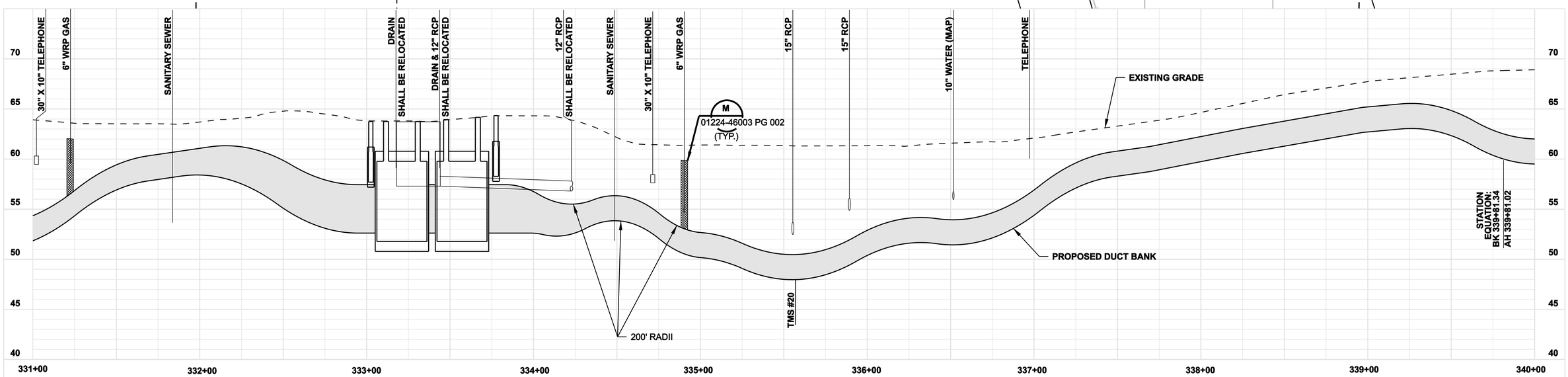

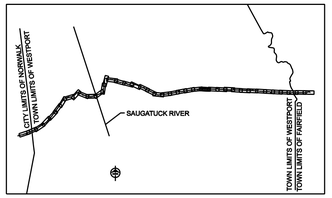

NORTH

DOCKET No. 272

0 30' 60'
HORIZONTAL SCALE IN FEET
0 5' 10'
VERTICAL SCALE IN FEET

ISSUED FOR CONSTRUCTION

no.	date	revisions	by	chk
1	5/10/07	ISSUED CSC REVISED	CTC	

Burns & McDonnell SINCE 1898

date 11/10/05 | detailed L. ROWSE
designed C. COURTRIGHT | checked S. NEWLAND

MF	NO.	DATE	REVISIONS	BY	CHK	APP	APP

NORTHEAST UTILITIES SERVICE CO.

FOR THE CONNECTICUT LIGHT & POWER COMPANY

TITLE MIDDLETOWN–NORWALK 345kV TRANSMISSION PROJECT

TOWN OF WESTPORT
PLAN AND PROFILE Sta. 331+00 to 340+00

BY SEN-BMCD	CHKD	APP	APP
DATE 11-10-05	DATE	DATE	DATE
SCALE AS NOTED	D	DWG. NO. 01224-10001 PG 048	

COPYRIGHT © 2007 BURNS & McDONNELL ENGINEERING COMPANY, INC.

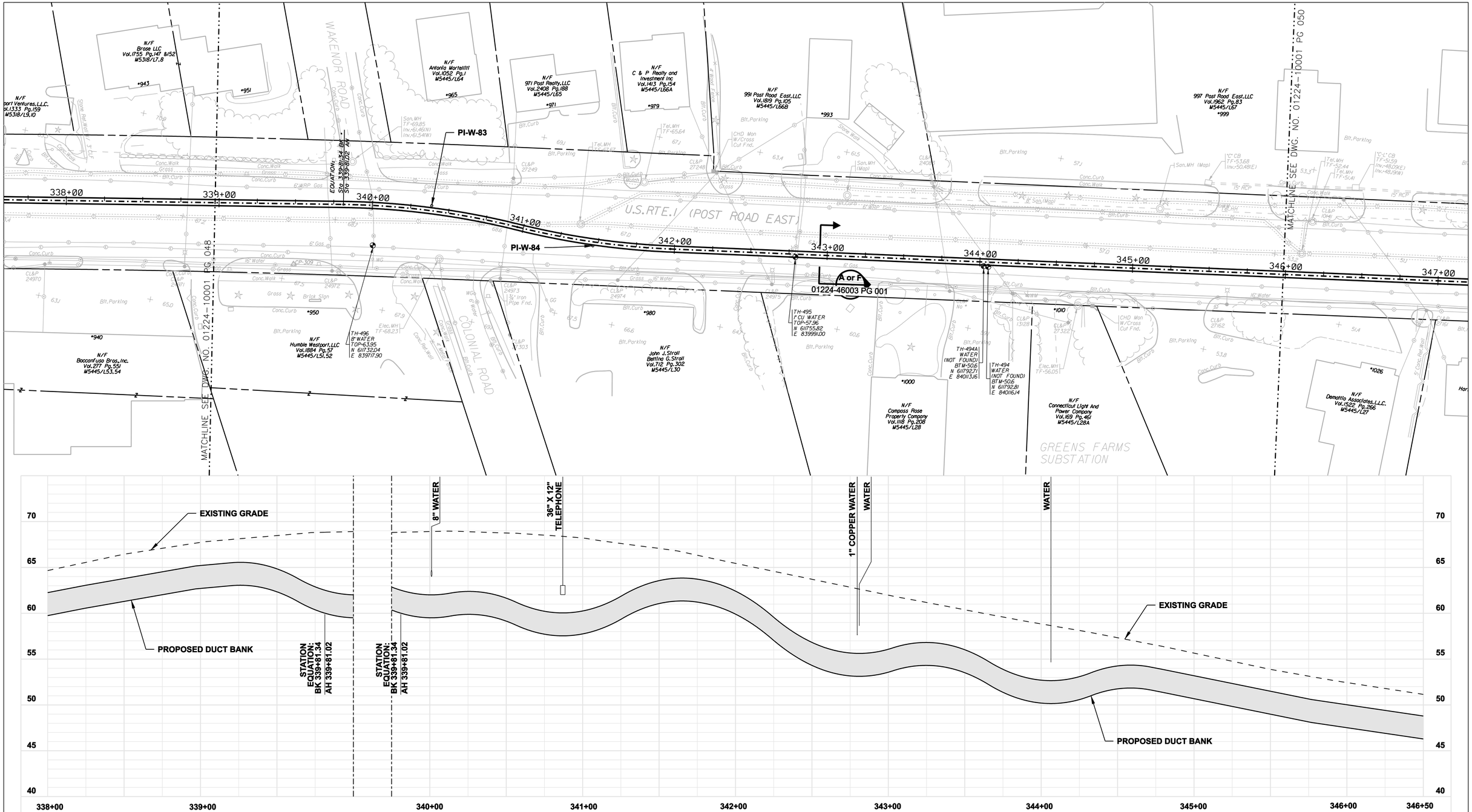

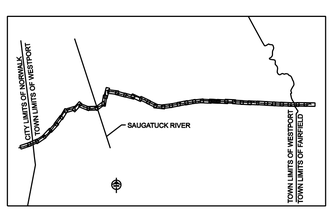

NORTH

0 30' 60'
HORIZONTAL SCALE IN FEET
0 5' 10'
VERTICAL SCALE IN FEET

ISSUED FOR CONSTRUCTION

DOCKET No. 272

no.	date	revisions	by	chk
1	5/10/07	ISSUED CSC REVISED	CTC	

Burns & McDonnell SINCE 1898

date 11/10/05 | detailed L. ROWSE
designed C. COURTRIGHT | checked S. NEWLAND

MF	NO.	DATE	REVISIONS	BY	CHK	APP	APP

NORTHEAST UTILITIES SERVICE CO.

FOR THE CONNECTICUT LIGHT & POWER COMPANY

TITLE MIDDLETOWN–NORWALK 345kV TRANSMISSION PROJECT

TOWN OF WESTPORT
PLAN AND PROFILE Sta. 338+00 to 346+50

BY SEN-BMCD	CHKD	APP	APP
DATE 11-10-05	DATE	DATE	DATE
SCALE AS NOTED	D	DWG. NO. 01224-10001 PG 049	

COPYRIGHT © 2007 BURNS & McDONNELL ENGINEERING COMPANY, INC.

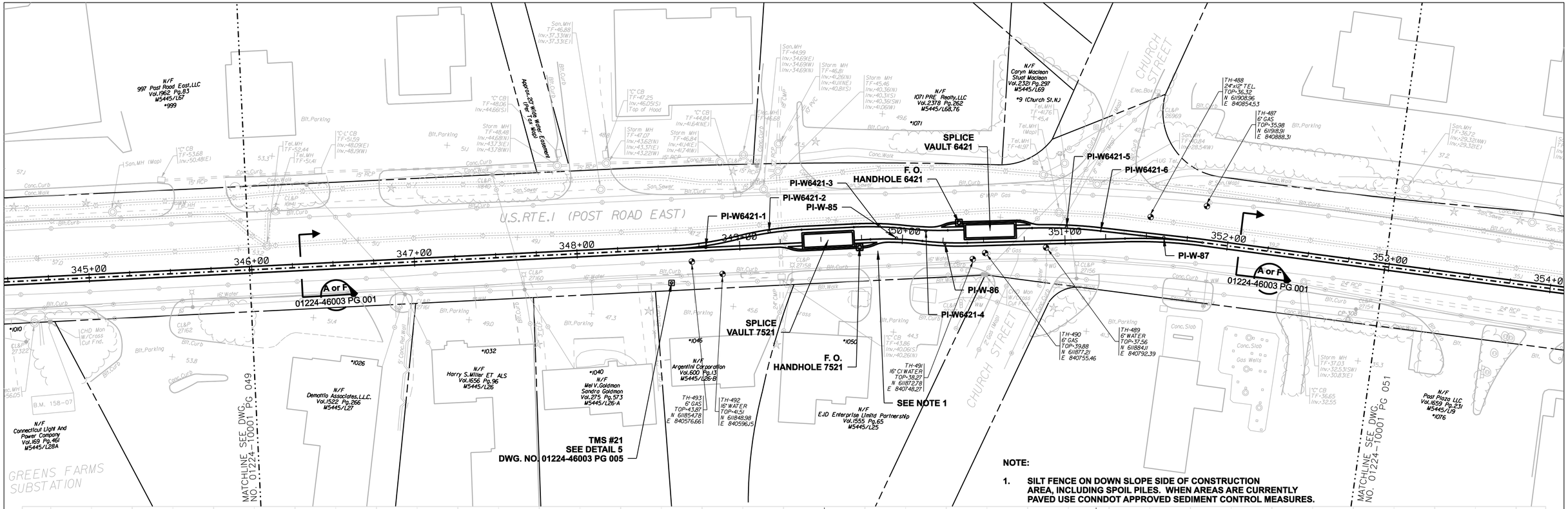

NOTE:

1. SILT FENCE ON DOWN SLOPE SIDE OF CONSTRUCTION AREA, INCLUDING SPOIL PILES. WHEN AREAS ARE CURRENTLY PAVED USE CONNDOT APPROVED SEDIMENT CONTROL MEASURES.

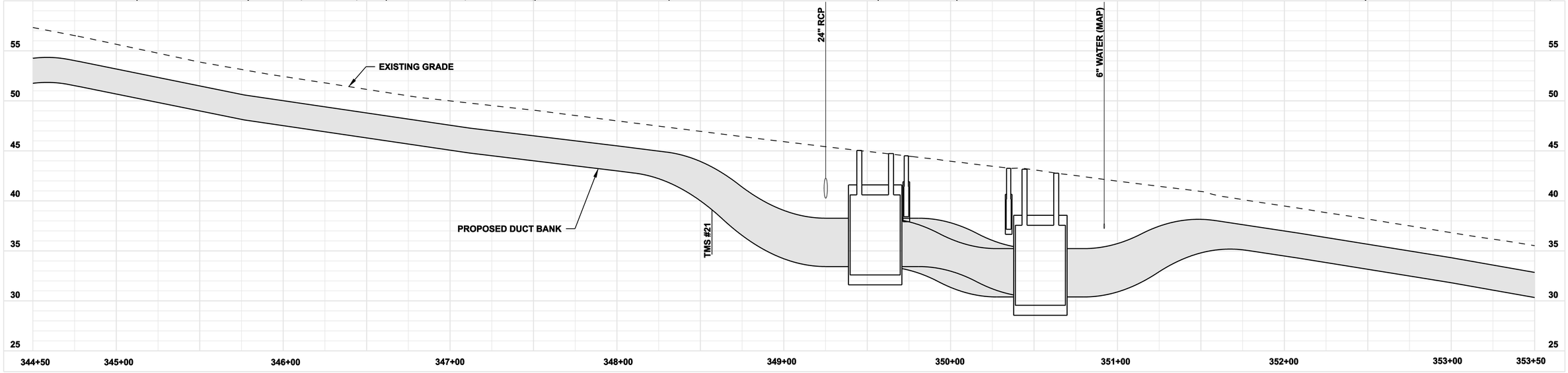

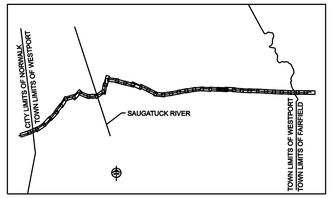

NORTH

0 30' 60'
HORIZONTAL SCALE IN FEET
0 5' 10'
VERTICAL SCALE IN FEET

DOCKET No. 272

ISSUED FOR CONSTRUCTION

no.	date	revisions	by	chk
1	5/10/07	ISSUED CSC REVISED	CTC	

Burns & McDonnell SINCE 1898

date 11/10/05 | detailed L. ROWSE
designed C. COURTRIGHT | checked S. NEWLAND

MF	NO.	DATE	REVISIONS	BY	CHK	APP	APP

NORTHEAST UTILITIES SERVICE CO.

FOR THE CONNECTICUT LIGHT & POWER COMPANY

TITLE MIDDLETOWN–NORWALK 345kV TRANSMISSION PROJECT

TOWN OF WESTPORT
PLAN AND PROFILE Sta. 344+50 to 353+50

BY SEN–BMCD	CHKD	APP	APP
DATE 11–10–05	DATE	DATE	DATE
SCALE AS NOTED	D	DWG. NO. 01224–10001 PG 050	

COPYRIGHT © 2007 BURNS & McDONNELL ENGINEERING COMPANY, INC.

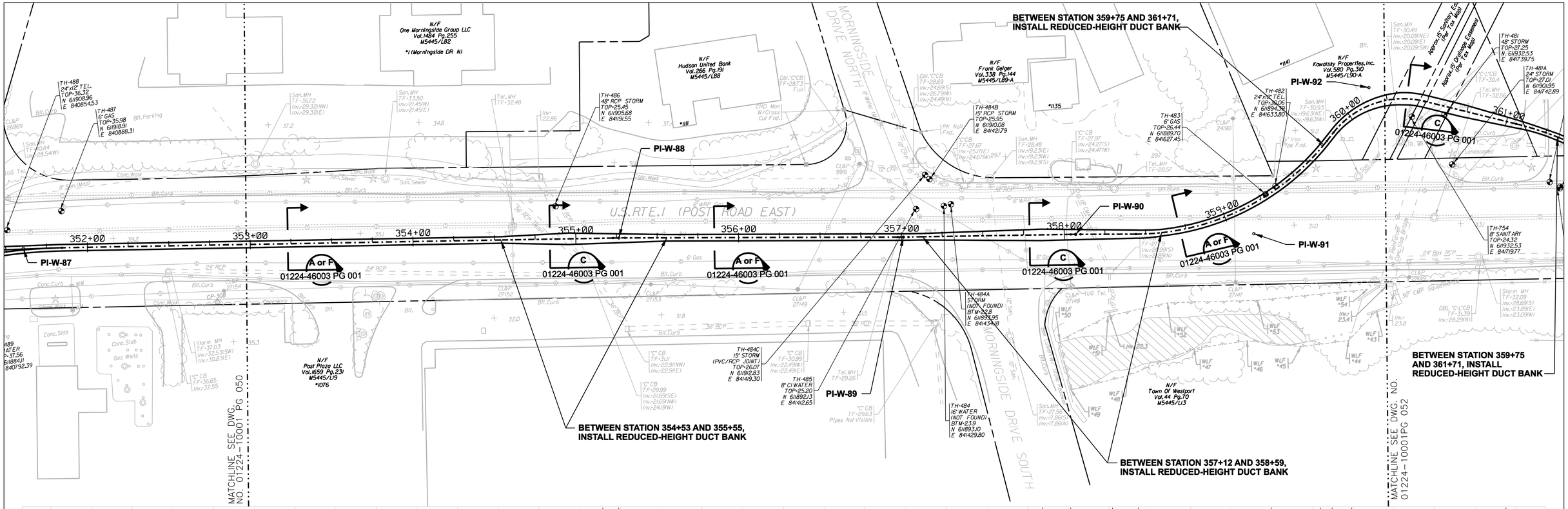

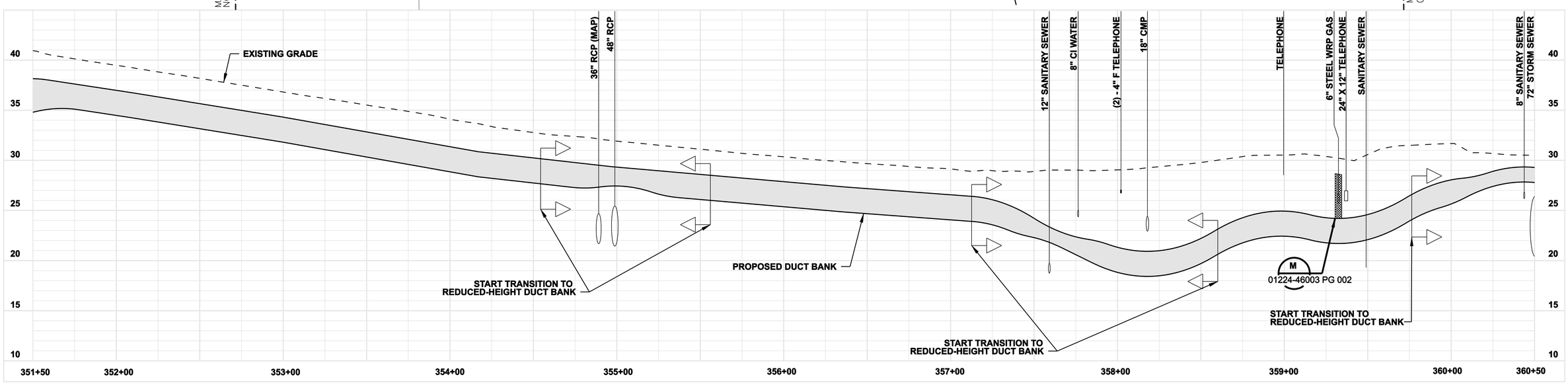

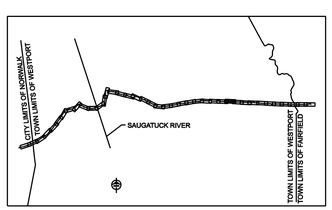

NORTH

0 30' 60'
HORIZONTAL SCALE IN FEET
0 5' 10'
VERTICAL SCALE IN FEET

ISSUED FOR CONSTRUCTION

DOCKET No. 272

no.	date	revisions	by	chk
1	5/10/07	ISSUED CSC REVISED	CTC	

Burns & McDonnell SINCE 1898

date 11/10/05 | detailed L. ROWSE
designed C. COURTRIGHT | checked S. NEWLAND

MF	NO.	DATE	REVISIONS	BY	CHK	APP	APP

NORTHEAST UTILITIES SERVICE CO.

FOR THE CONNECTICUT LIGHT & POWER COMPANY

TITLE MIDDLETOWN–NORWALK 345kV TRANSMISSION PROJECT

TOWN OF WESTPORT
PLAN AND PROFILE Sta. 351+50 to 360+50

BY SEN-BMCD	CHKD	APP	APP
DATE 11-10-05	DATE	DATE	DATE
SCALE AS NOTED	D	DWG. NO. 01224-10001 PG 051	

COPYRIGHT © 2007 BURNS & McDONNELL ENGINEERING COMPANY, INC.

BETWEEN STATION 359+75
AND 361+71, INSTALL
REDUCED-HEIGHT DUCT BANK

PI-W-92

BETWEEN STATION 359+75
AND 361+71, INSTALL
REDUCED-HEIGHT DUCT BANK

PI-W-93

PI-W-91

PI-W-94

PI-W6422-1

PI-W6422-2

PI-W6422-3

PI-W-95

PI-W6422-4

PI-W-96

PI-W-97

PI-W6422-5

PI-W6422-6

PI-W-98

SEE NOTE 1

F. O.
HANDHOLE 7522

SPLICE
VAULT 7522

F. O.
HANDHOLE 6422

SPLICE
VAULT 6422

TMS #22
SEE DETAIL 5
DWG. NO. 01224-46003 PG 005

01224-46003 PG 001

MATCHLINE SEE DWG. NO. 01224-10001 PG 051

MATCHLINE SEE DWG. NO. 01224-10001 PG 053

NOTE:

1. SILT FENCE ON DOWN SLOPE SIDE OF CONSTRUCTION AREA, INCLUDING SPOIL PILES. WHEN AREAS ARE CURRENTLY PAVED USE CONNDOT APPROVED SEDIMENT CONTROL MEASURES.

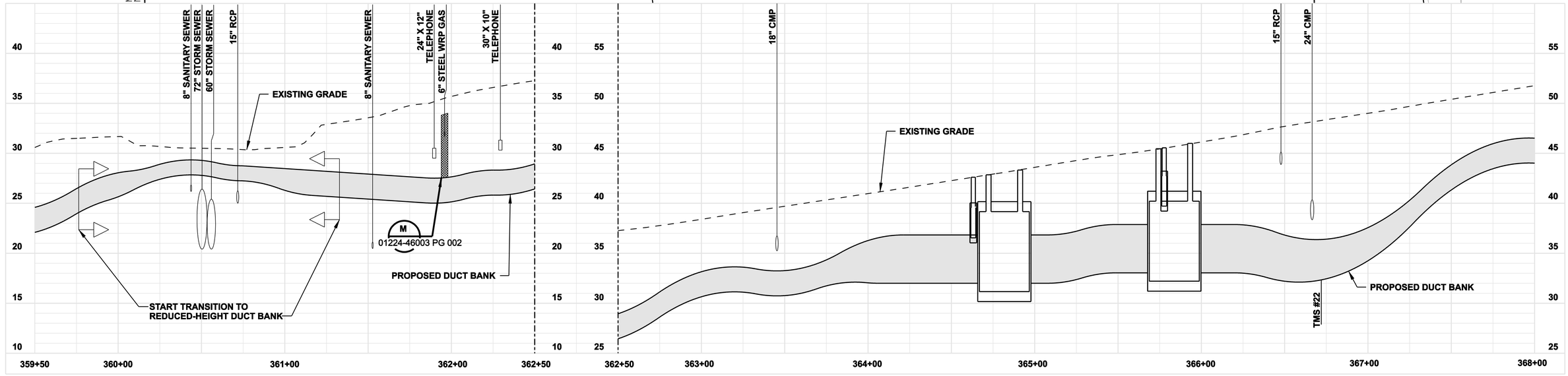

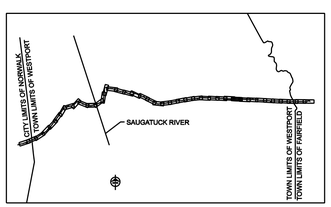

NORTH

0 30' 60'
HORIZONTAL SCALE IN FEET
0 5' 10'
VERTICAL SCALE IN FEET

DOCKET No. 272

ISSUED FOR CONSTRUCTION

no.	date	revisions	by	chk
1	5/10/07	ISSUED CSC REVISED	CTC	

Burns & McDonnell
SINCE 1898

date 11/10/05
detailed L. ROWSE
designed C. COURTRIGHT
checked S. NEWLAND

MF	NO.	DATE	REVISIONS	BY	CHK	APP	APP

NORTHEAST UTILITIES SERVICE CO.

FOR THE CONNECTICUT LIGHT & POWER COMPANY

TITLE MIDDLETOWN–NORWALK 345kV TRANSMISSION PROJECT

TOWN OF WESTPORT
PLAN AND PROFILE Sta. 359+50 to 368+00

BY SEN–BMCD	CHKD	APP	APP
DATE 11–10–05	DATE	DATE	DATE
SCALE AS NOTED	D	DWG. NO. 01224–10001 PG 052	

COPYRIGHT © 2007 BURNS & McDONNELL ENGINEERING COMPANY, INC.

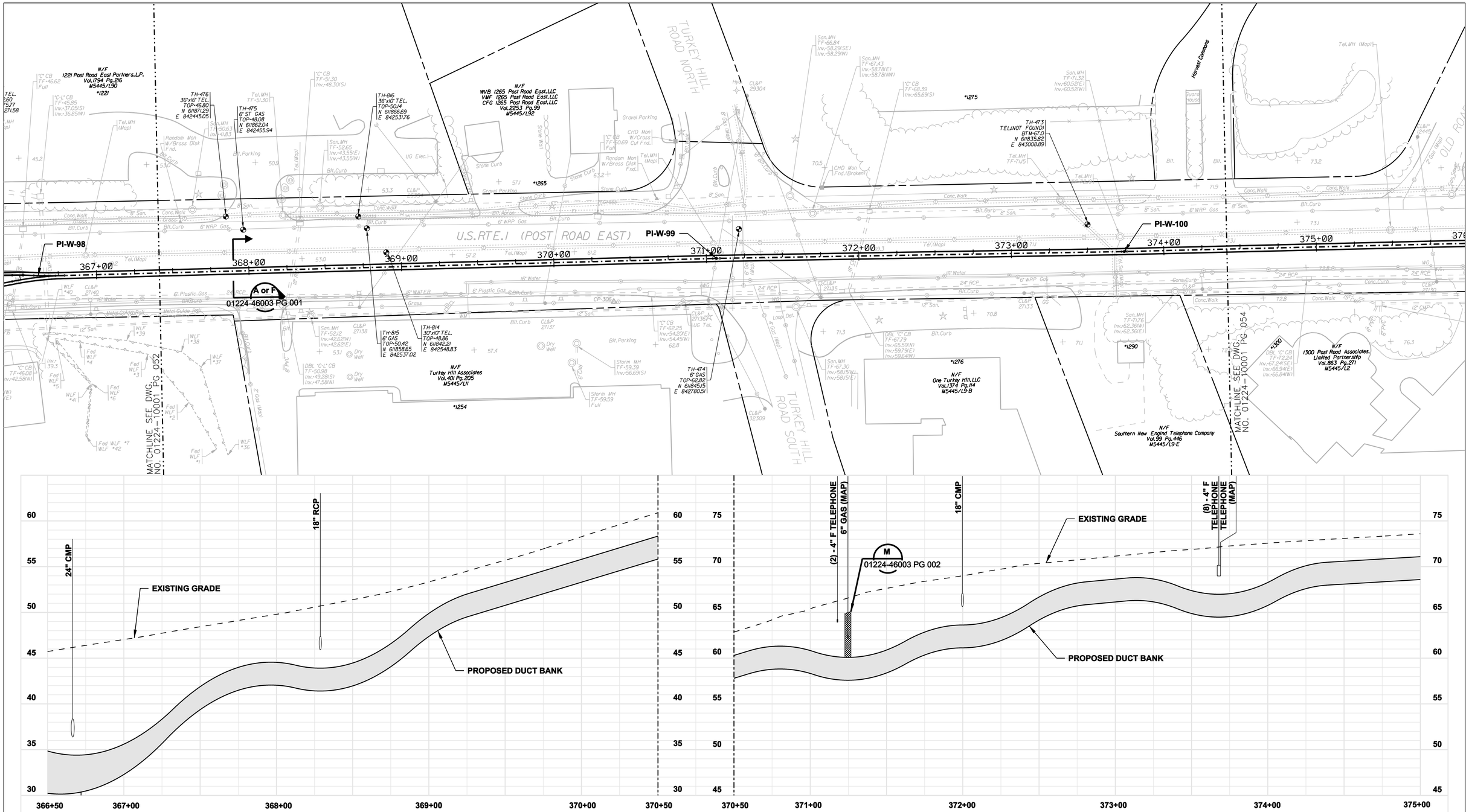

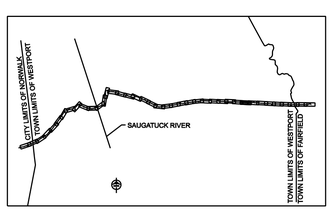

NORTH

0 30' 60'
HORIZONTAL SCALE IN FEET
0 5' 10'
VERTICAL SCALE IN FEET

DOCKET No. 272

ISSUED FOR CONSTRUCTION

no.	date	revisions	by	chk
1	5/10/07	ISSUED CSC REVISED	CTC	

Burns & McDonnell
SINCE 1898

date 11/10/05
detailed L. ROWSE
designed C. COURTRIGHT
checked S. NEWLAND

MF	NO.	DATE	REVISIONS	BY	CHK	APP	APP

NORTHEAST UTILITIES SERVICE CO.

FOR THE CONNECTICUT LIGHT & POWER COMPANY

TITLE MIDDLETOWN–NORWALK 345kV TRANSMISSION PROJECT

TOWN OF WESTPORT
PLAN AND PROFILE Sta. 366+50 to 375+00

BY SEN-BMCD	CHKD	APP	APP
DATE 11-10-05	DATE	DATE	DATE
SCALE AS NOTED	D	DWG. NO. 01224-10001 PG 053	

COPYRIGHT © 2007 BURNS & McDONNELL ENGINEERING COMPANY, INC.

NOTE:

1. SILT FENCE ON DOWN SLOPE SIDE OF CONSTRUCTION AREA, INCLUDING SPOIL PILES. WHEN AREAS ARE CURRENTLY PAVED USE CONNDOT APPROVED SEDIMENT CONTROL MEASURES.

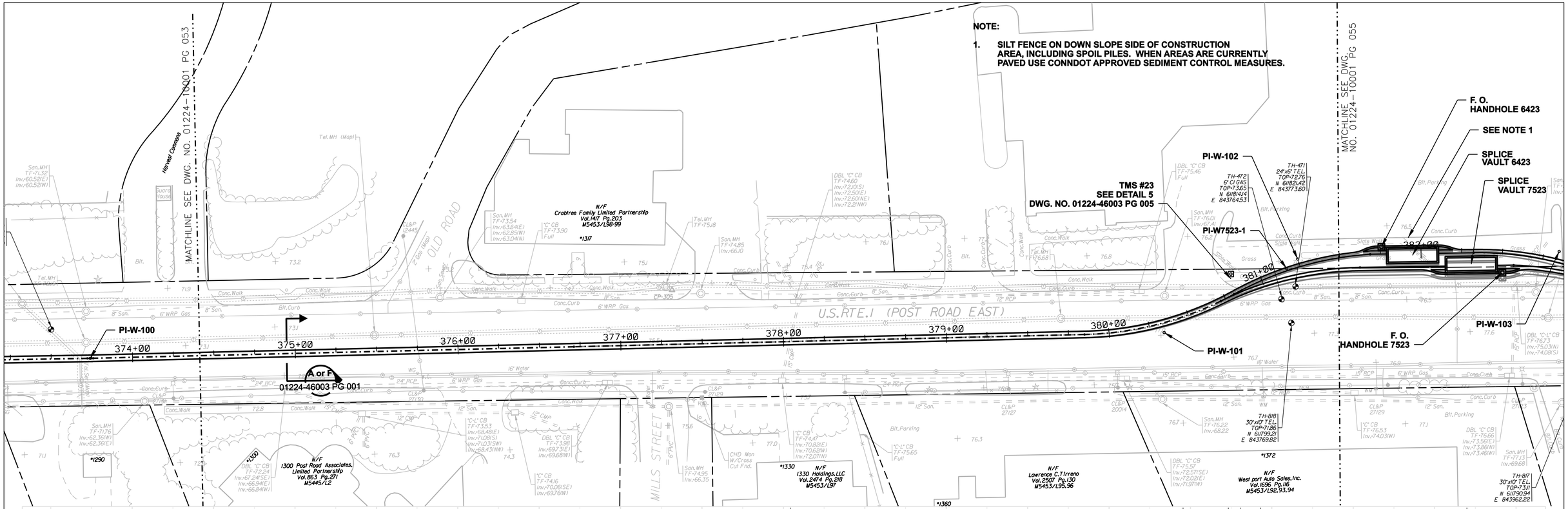

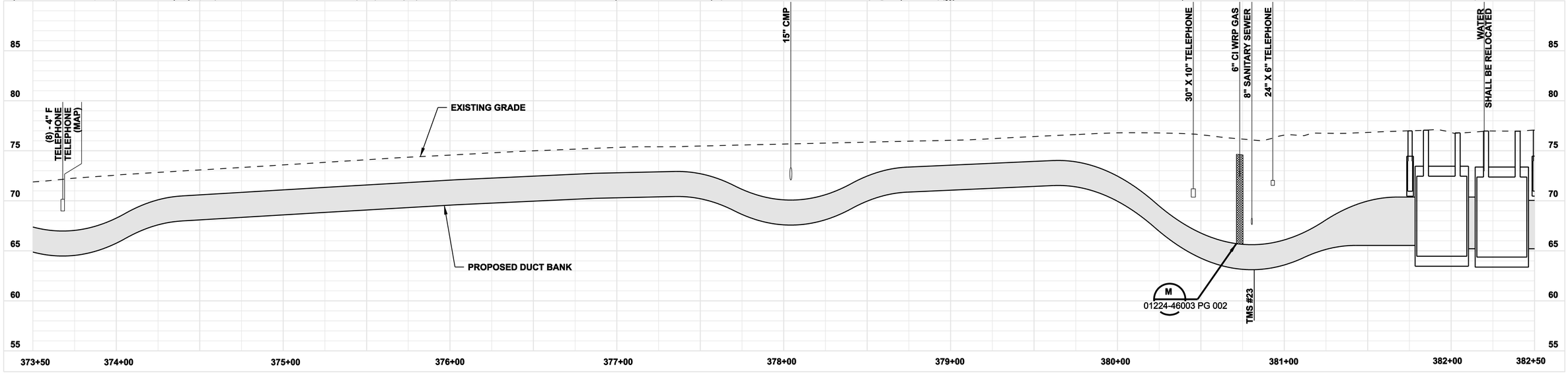

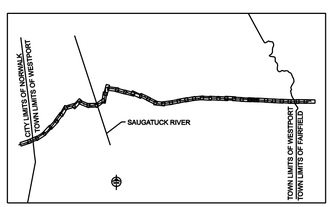

NORTH

0 30' 60'
HORIZONTAL SCALE IN FEET
0 5' 10'
VERTICAL SCALE IN FEET

ISSUED FOR CONSTRUCTION

DOCKET No. 272

no.	date	revisions	by	chk
1	5/10/07	ISSUED CSC REVISED	CTC	

Burns & McDonnell
SINCE 1898

date 11/10/05
detailed L. ROWSE
designed C. COURTRIGHT
checked S. NEWLAND

MF	NO.	DATE	REVISIONS	BY	CHK	APP	APP

NORTHEAST UTILITIES SERVICE CO.

FOR THE CONNECTICUT LIGHT & POWER COMPANY

TITLE MIDDLETOWN-NORWALK 345kV TRANSMISSION PROJECT

TOWN OF WESTPORT
PLAN AND PROFILE Sta. 373+50 to 382+50

BY SEN-BMCD	CHKD	APP	APP
DATE 11-10-05	DATE	DATE	DATE
SCALE AS NOTED	D	DWG. NO. 01224-10001 PG 054	

COPYRIGHT © 2007 BURNS & McDONNELL ENGINEERING COMPANY, INC.

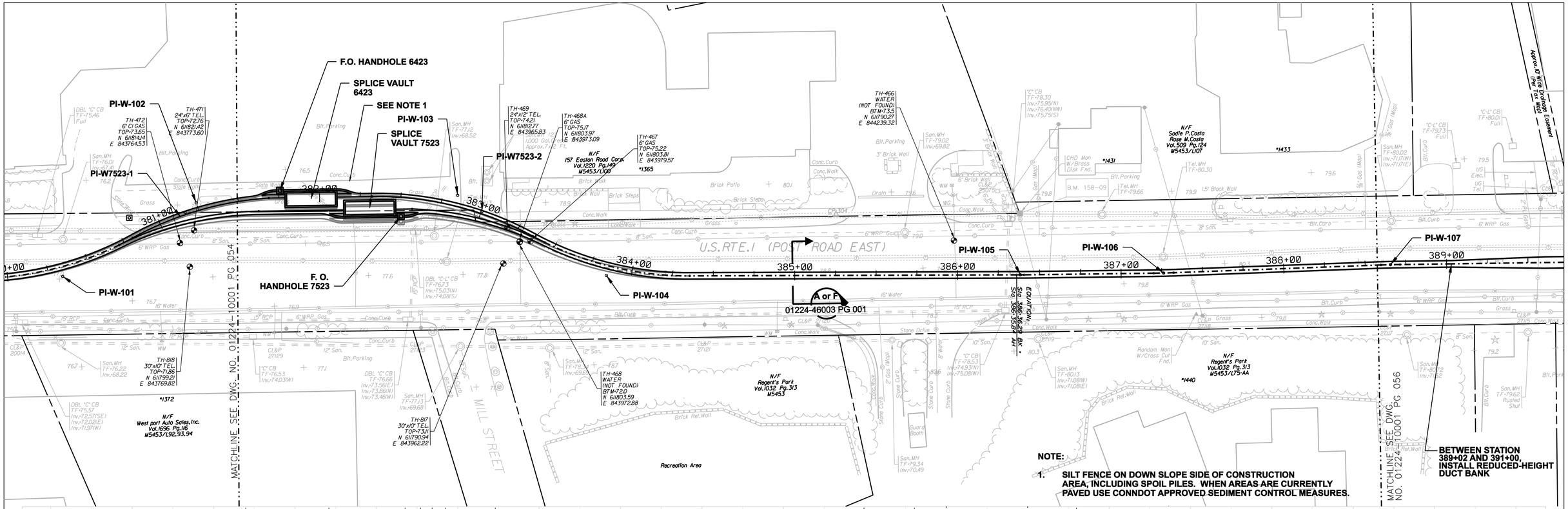

NOTE:

1. SILT FENCE ON DOWN SLOPE SIDE OF CONSTRUCTION AREA, INCLUDING SPOIL PILES. WHEN AREAS ARE CURRENTLY PAVED USE CONNDOT APPROVED SEDIMENT CONTROL MEASURES.

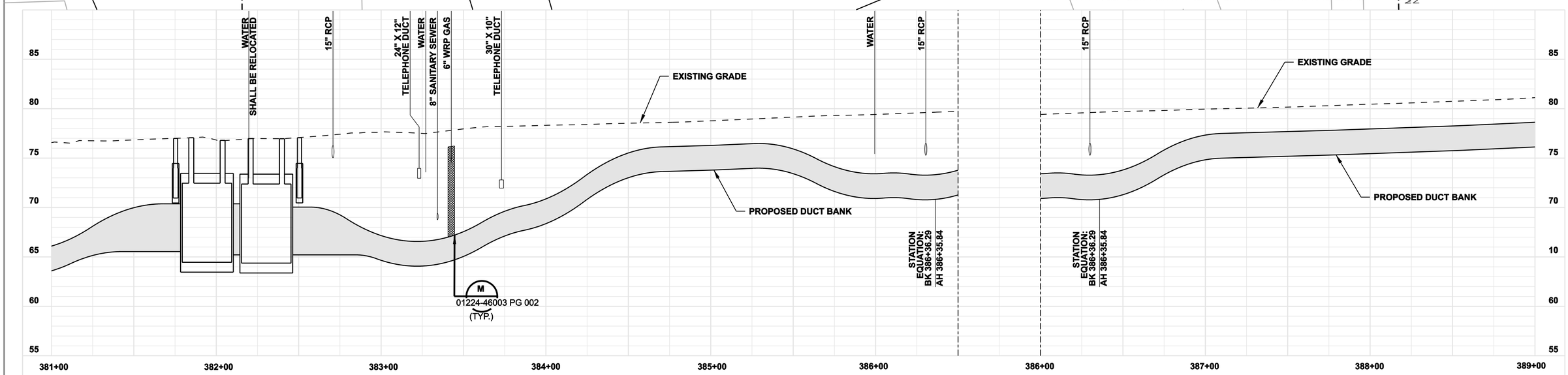

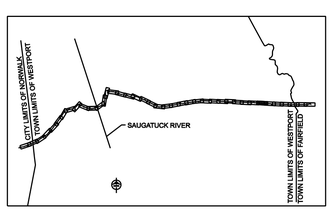

NORTH

0 30' 60'
HORIZONTAL SCALE IN FEET
0 5' 10'
VERTICAL SCALE IN FEET

DOCKET No. 272

ISSUED FOR CONSTRUCTION

no.	date	revisions	by	chk
1	5/10/07	ISSUED CSC REVISED	CTC	

Burns & McDonnell SINCE 1898

date 11/10/05 | detailed L. ROWSE
designed C. COURTRIGHT | checked S. NEWLAND

MF	NO.	DATE	REVISIONS	BY	CHK	APP	APP

NORTHEAST UTILITIES SERVICE CO.

FOR THE CONNECTICUT LIGHT & POWER COMPANY

TITLE MIDDLETOWN–NORWALK 345kV TRANSMISSION PROJECT

TOWN OF WESTPORT
PLAN AND PROFILE Sta. 381+00 to 389+00

BY SEN-BMCD	CHKD	APP	APP
DATE 11-10-05	DATE	DATE	DATE
SCALE AS NOTED	D	DWG. NO. 01224-10001 PG 055	

COPYRIGHT © 2007 BURNS & McDONNELL ENGINEERING COMPANY, INC.

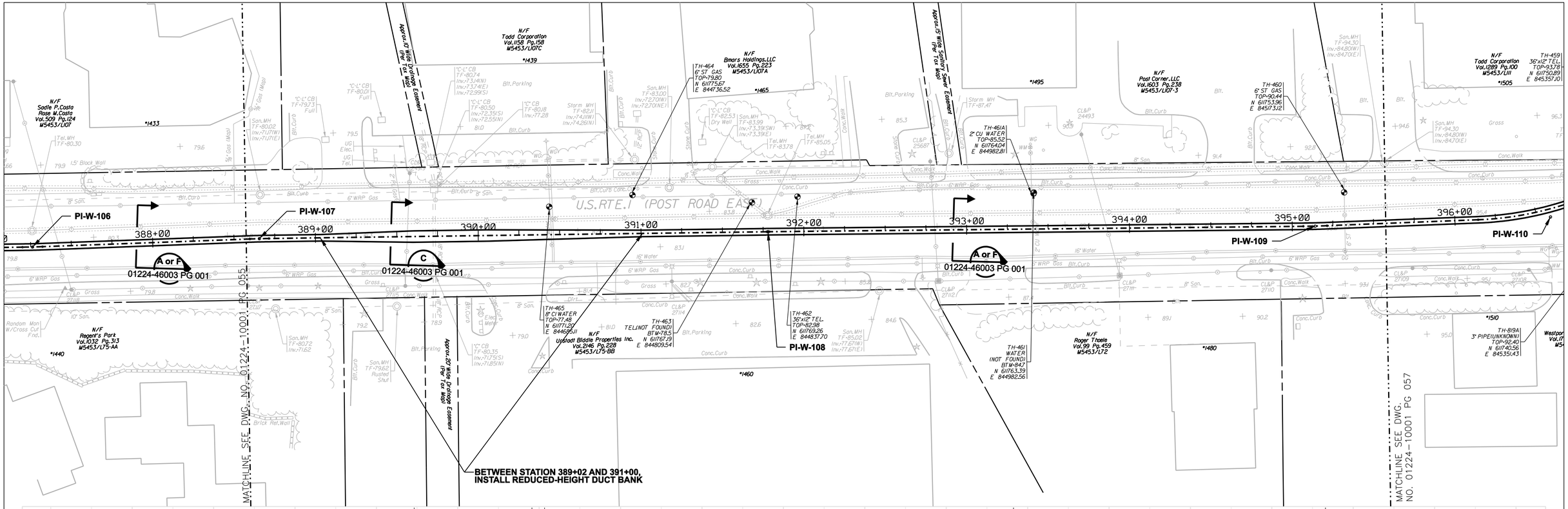

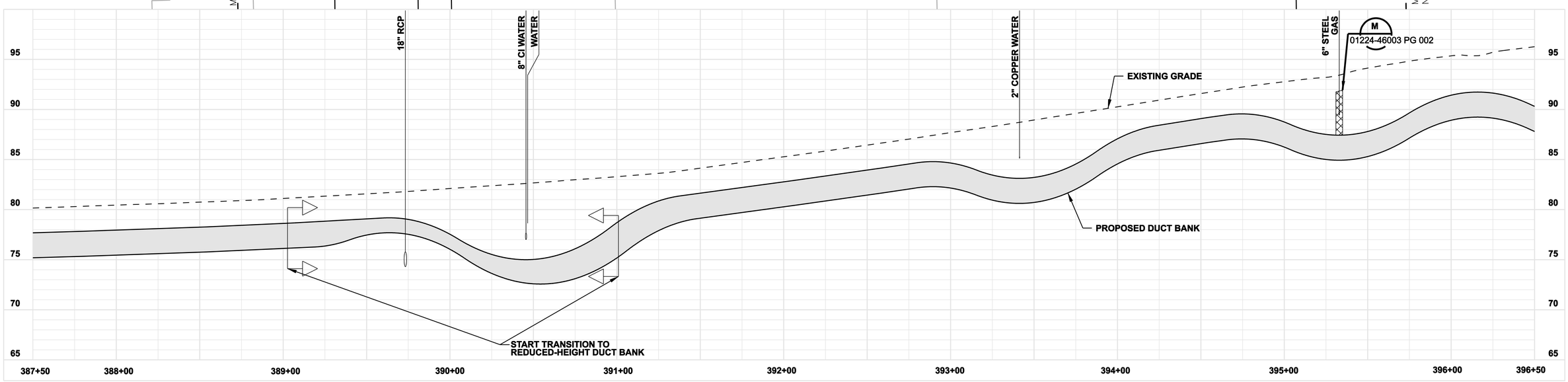

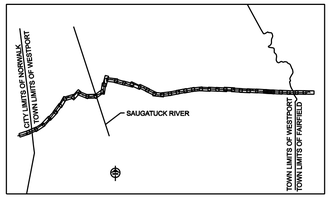

NORTH

0 30' 60'
HORIZONTAL SCALE IN FEET
0 5' 10'
VERTICAL SCALE IN FEET

ISSUED FOR CONSTRUCTION

DOCKET No. 272

no.	date	revisions	by	chk
1	5/10/07	ISSUED CSC REVISED	CTC	

Burns & McDonnell SINCE 1898

date 11/10/05
detailed L. ROWSE
designed C. COURTRIGHT
checked S. NEWLAND

MF	NO.	DATE	REVISIONS	BY	CHK	APP	APP

NORTHEAST UTILITIES SERVICE CO.

FOR THE CONNECTICUT LIGHT & POWER COMPANY

TITLE MIDDLETOWN–NORWALK 345kV TRANSMISSION PROJECT

TOWN OF WESTPORT
PLAN AND PROFILE Sta. 387+50 to 396+50

BY SEN–BMCD	CHKD	APP	APP
DATE 11–10–05	DATE	DATE	DATE
SCALE AS NOTED	D	DWG. NO. 01224–10001 PG 056	

COPYRIGHT © 2007 BURNS & McDONNELL ENGINEERING COMPANY, INC.

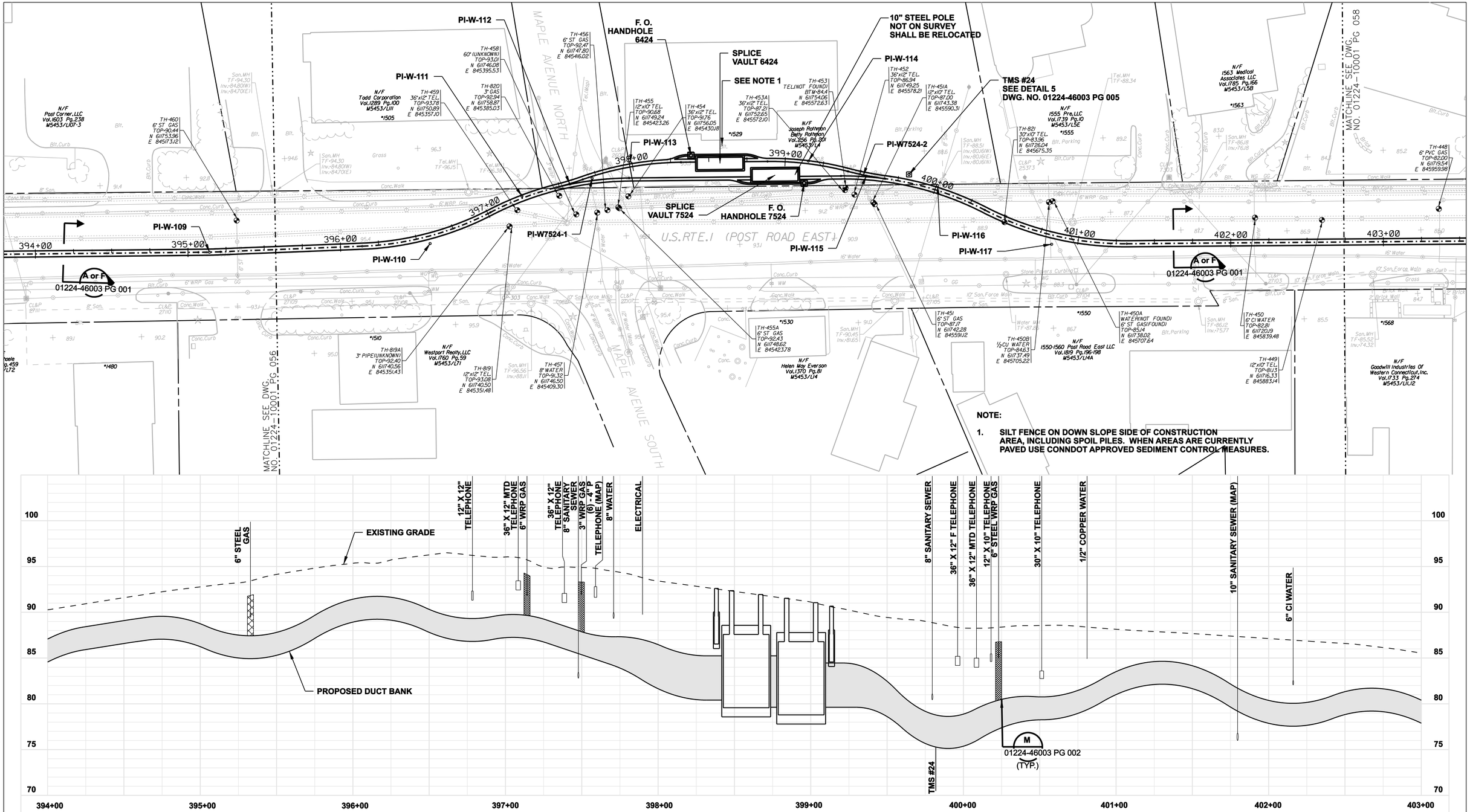

NOTE:

1. SILT FENCE ON DOWN SLOPE SIDE OF CONSTRUCTION AREA, INCLUDING SPOIL PILES. WHEN AREAS ARE CURRENTLY PAVED USE CONNDOT APPROVED SEDIMENT CONTROL MEASURES.

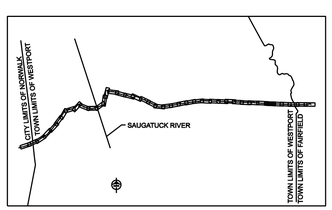

NORTH

0 30' 60'
HORIZONTAL SCALE IN FEET
0 5' 10'
VERTICAL SCALE IN FEET

DOCKET No. 272

ISSUED FOR CONSTRUCTION

no.	date	revisions	by	chk
1	5/10/07	ISSUED CSC REVISED	CTC	

Burns & McDonnell
SINCE 1898

date 11/10/05
detailed L. ROWSE
designed C. COURTRIGHT
checked S. NEWLAND

MF	NO.	DATE	REVISIONS	BY	CHK	APP	APP

NORTHEAST UTILITIES SERVICE CO.

FOR THE CONNECTICUT LIGHT & POWER COMPANY

TITLE MIDDLETOWN–NORWALK 345kV TRANSMISSION PROJECT

TOWN OF WESTPORT
PLAN AND PROFILE Sta. 394+00 to 403+00

BY SEN-BMCD	CHKD	APP	APP
DATE 11-10-05	DATE	DATE	DATE
SCALE AS NOTED	D	DWG. NO. 01224-10001 PG 057	

COPYRIGHT © 2007 BURNS & McDONNELL ENGINEERING COMPANY, INC.

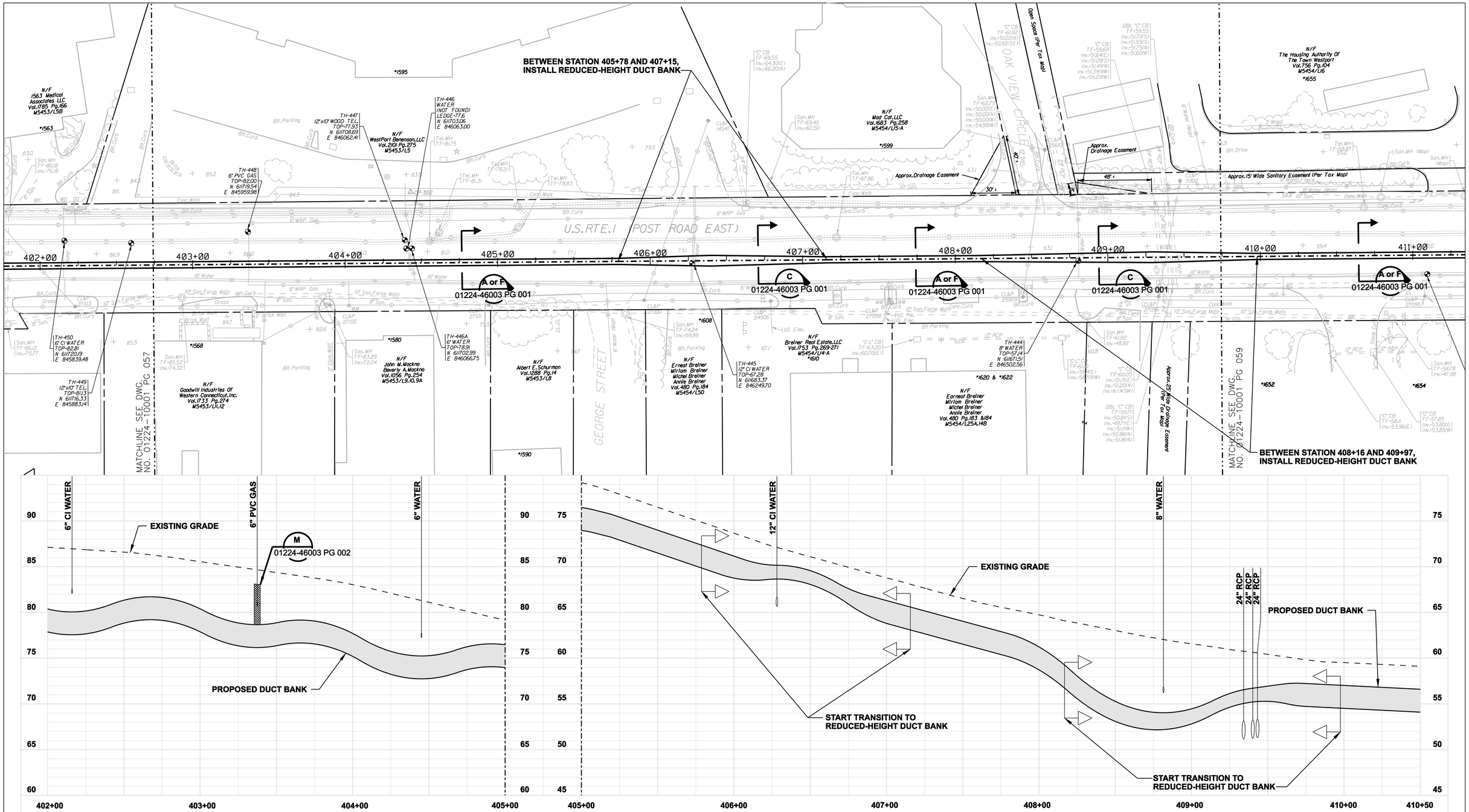

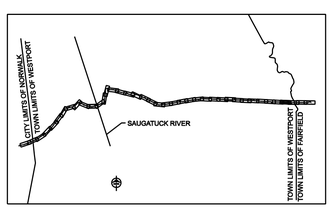

NORTH

HORIZONTAL SCALE IN FEET 0 30' 60'

VERTICAL SCALE IN FEET 0 5' 10'

ISSUED FOR CONSTRUCTION

DOCKET No. 272

no.	date	revisions	by	chk
1	5/10/07	ISSUED CSC REVISED	CTC	

Burns & McDonnell SINCE 1898

date 11/10/05 | detailed L. ROWSE

designed C. COURTRIGHT | checked S. NEWLAND

MF	NO.	DATE	REVISIONS	BY	CHK	APP	APP

NORTHEAST UTILITIES SERVICE CO.

FOR THE CONNECTICUT LIGHT & POWER COMPANY

TITLE MIDDLETOWN–NORWALK 345kV TRANSMISSION PROJECT

TOWN OF WESTPORT
PLAN AND PROFILE Sta. 402+00 to 410+50

BY SEN-BMCD	CHKD	APP	APP
DATE 11-10-05	DATE	DATE	DATE
SCALE AS NOTED	D	DWG. NO. 01224-10001 PG 058	

COPYRIGHT © 2007 BURNS & McDONNELL ENGINEERING COMPANY, INC.

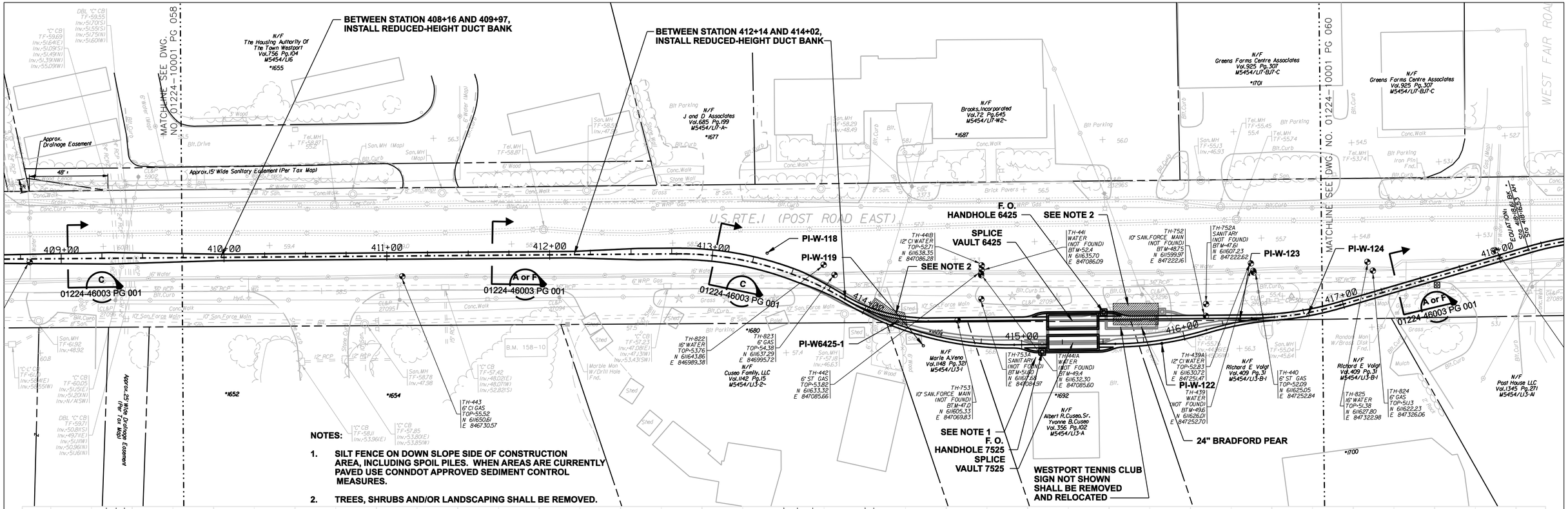

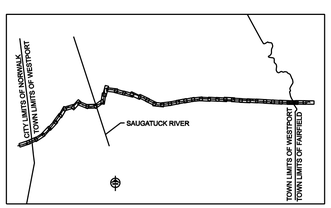

NORTH

0 30' 60'
HORIZONTAL SCALE IN FEET
0 5' 10'
VERTICAL SCALE IN FEET

ISSUED FOR CONSTRUCTION

DOCKET No. 272

no.	date	revisions	by	chk
1	5/10/07	ISSUED CSC REVISED	CTC	

Burns & McDonnell SINCE 1898

date 11/10/05 | detailed L. ROWSE
designed C. COURTRIGHT | checked S. NEWLAND

MF	NO.	DATE	REVISIONS	BY	CHK	APP	APP

NORTHEAST UTILITIES SERVICE CO.

FOR THE CONNECTICUT LIGHT & POWER COMPANY

TITLE MIDDLETOWN–NORWALK 345kV TRANSMISSION PROJECT

TOWN OF WESTPORT
PLAN AND PROFILE Sta. 409+00 to 418+00

BY SEN-BMCD	CHKD	APP	APP
DATE 11-10-05	DATE	DATE	DATE
SCALE AS NOTED	D	DWG. NO. 01224-10001 PG 059	

COPYRIGHT © 2007 BURNS & McDONNELL ENGINEERING COMPANY, INC.

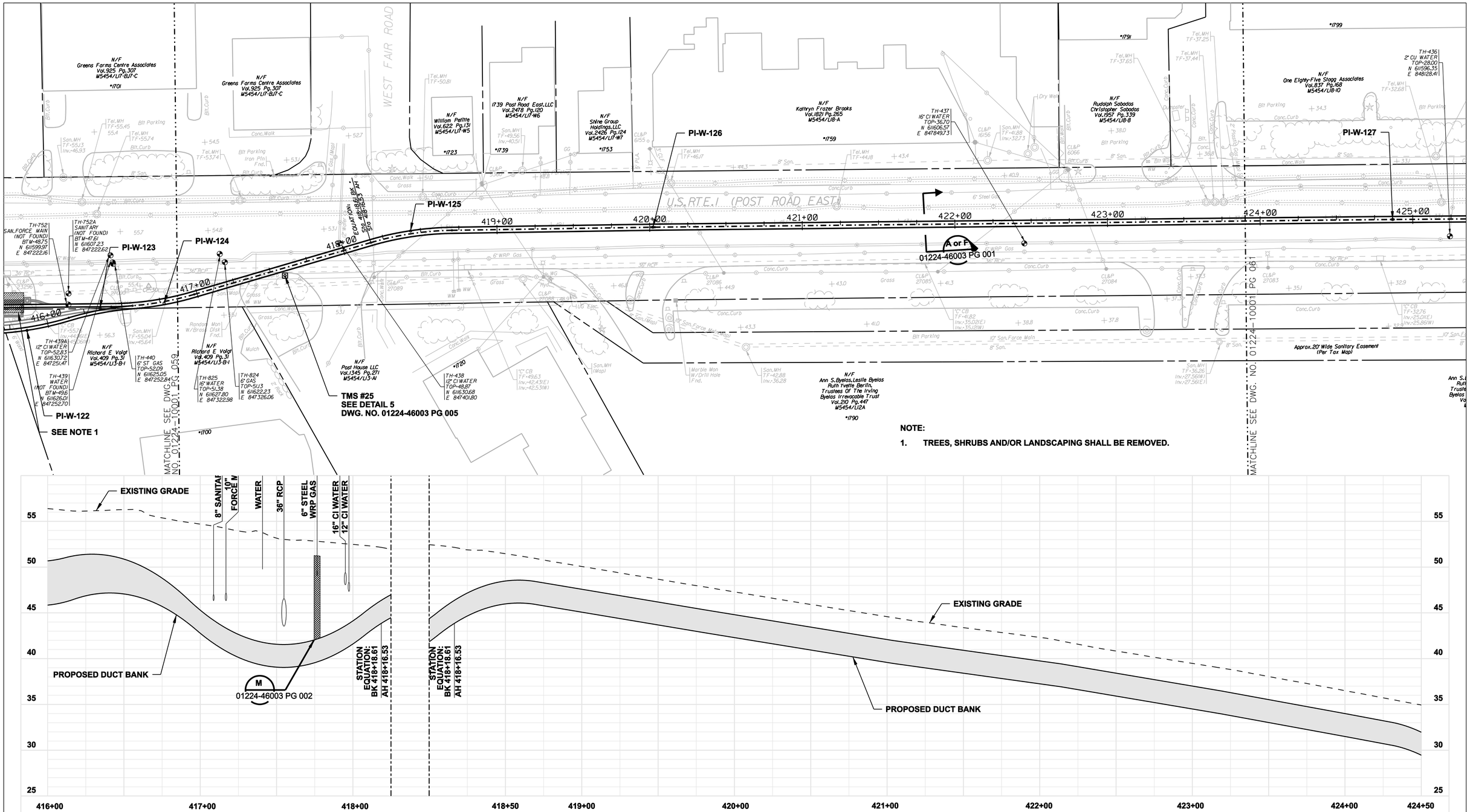

NOTE:

1. TREES, SHRUBS AND/OR LANDSCAPING SHALL BE REMOVED.

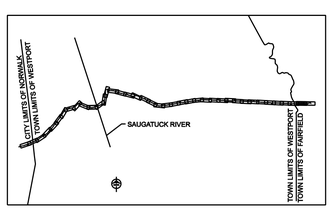

NORTH

HORIZONTAL SCALE IN FEET 0 30' 60'

VERTICAL SCALE IN FEET 0 5' 10'

ISSUED FOR CONSTRUCTION

DOCKET No. 272

no.	date	revisions	by	chk
1	5/10/07	ISSUED CSC REVISED	CTC	

Burns & McDonnell SINCE 1898

date 11/10/05 | detailed L. ROWSE

designed C. COURTRIGHT | checked S. NEWLAND

MF	NO.	DATE	REVISIONS	BY	CHK	APP	APP

NORTHEAST UTILITIES SERVICE CO.

FOR THE CONNECTICUT LIGHT & POWER COMPANY

TITLE MIDDLETOWN–NORWALK 345kV TRANSMISSION PROJECT

TOWN OF WESTPORT
PLAN AND PROFILE Sta. 416+00 to 424+50

3

BY SEN-BMCD	CHKD	APP	APP
DATE 11-10-05	DATE	DATE	DATE
SCALE AS NOTED	D	DWG. NO. 01224-10001 PG 060	

COPYRIGHT © 2007 BURNS & McDONNELL ENGINEERING COMPANY, INC.

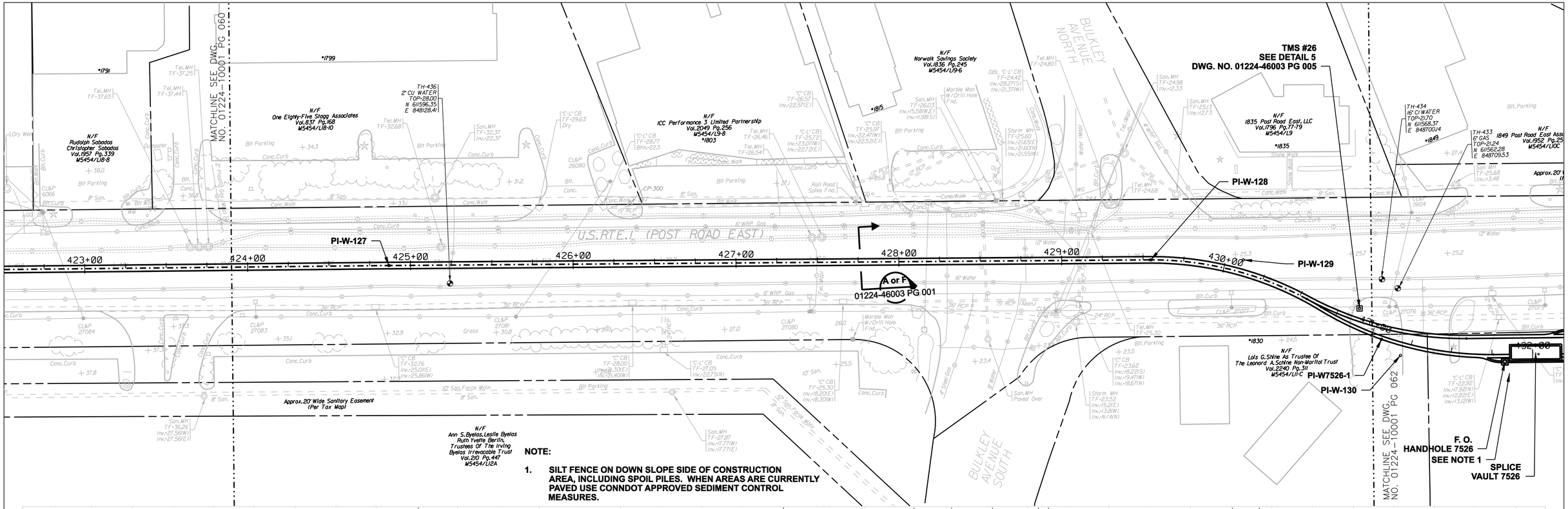

NOTE:

1. SILT FENCE ON DOWN SLOPE SIDE OF CONSTRUCTION AREA, INCLUDING SPOIL PILES. WHEN AREAS ARE CURRENTLY PAVED USE CONNDOT APPROVED SEDIMENT CONTROL MEASURES.

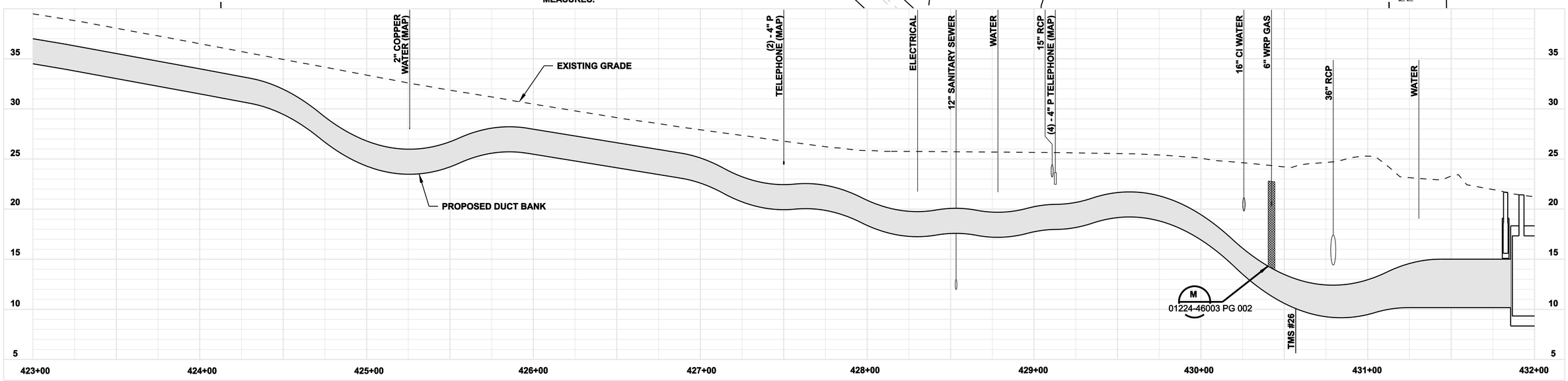

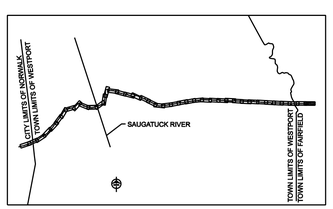

NORTH

0 30' 60'
HORIZONTAL SCALE IN FEET
0 5' 10'
VERTICAL SCALE IN FEET

ISSUED FOR CONSTRUCTION

DOCKET No. 272

no.	date	revisions	by	chk
1	5/10/07	ISSUED CSC REVISED	CTC	

Burns & McDonnell SINCE 1898

date 11/10/05
detailed L. ROWSE
designed C. COURTRIGHT
checked S. NEWLAND

MF	NO.	DATE	REVISIONS	BY	CHK	APP	APP

NORTHEAST UTILITIES SERVICE CO.

FOR THE CONNECTICUT LIGHT & POWER COMPANY

TITLE MIDDLETOWN–NORWALK 345kV TRANSMISSION PROJECT

TOWN OF WESTPORT
PLAN AND PROFILE Sta. 423+00 to 432+00

BY SEN-BMCD	CHKD	APP	APP
DATE 11-10-05	DATE	DATE	DATE
SCALE AS NOTED	D	DWG. NO. 01224-10001 PG 061	

COPYRIGHT © 2007 BURNS & McDONNELL ENGINEERING COMPANY, INC.

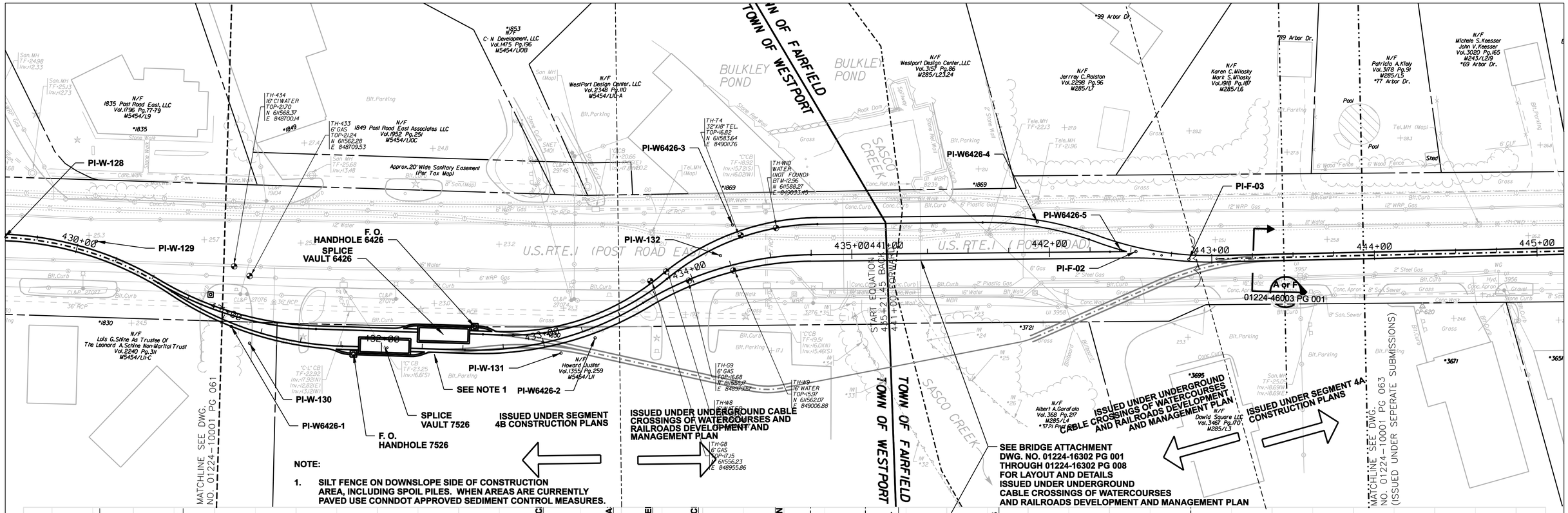

NOTE:

1. SILT FENCE ON DOWNSLOPE SIDE OF CONSTRUCTION AREA, INCLUDING SPOIL PILES. WHEN AREAS ARE CURRENTLY PAVED USE CONNDOT APPROVED SEDIMENT CONTROL MEASURES.

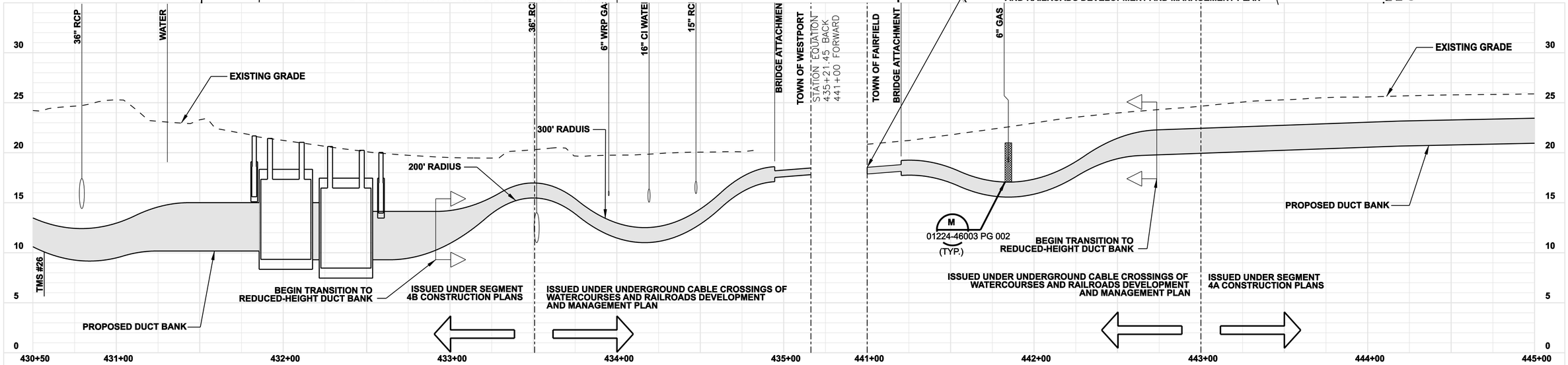

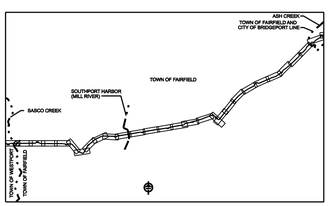

NORTH

0 30' 60'
HORIZONTAL SCALE IN FEET
0 5' 10'
VERTICAL SCALE IN FEET

ISSUED FOR CONSTRUCTION

DOCKET No. 272

no.	date	revisions	by	chk
1	5/10/07	ISSUED CSC REVISED	CTC	

Burns & McDonnell
SINCE 1898

date 08/15/05
detailed L. ROWSE
designed C. COURTRIGHT
checked S. NEWLAND

MF	NO.	DATE	REVISIONS	BY	CHK	APP	APP

NORTHEAST UTILITIES SERVICE CO.

FOR THE CONNECTICUT LIGHT & POWER COMPANY

TITLE MIDDLETOWN–NORWALK 345kV TRANSMISSION PROJECT

TOWN OF WESTPORT/TOWN OF FAIRFIELD
PLAN AND PROFILE Sta. 430+50 to 445+00

BY SEN–BMCD	CHKD	APP	APP
DATE 8–15–05	DATE	DATE	DATE
SCALE AS NOTED	D	DWG. NO. 01224–10001 PG 062	

COPYRIGHT © 2007 BURNS & McDONNELL ENGINEERING COMPANY, INC.

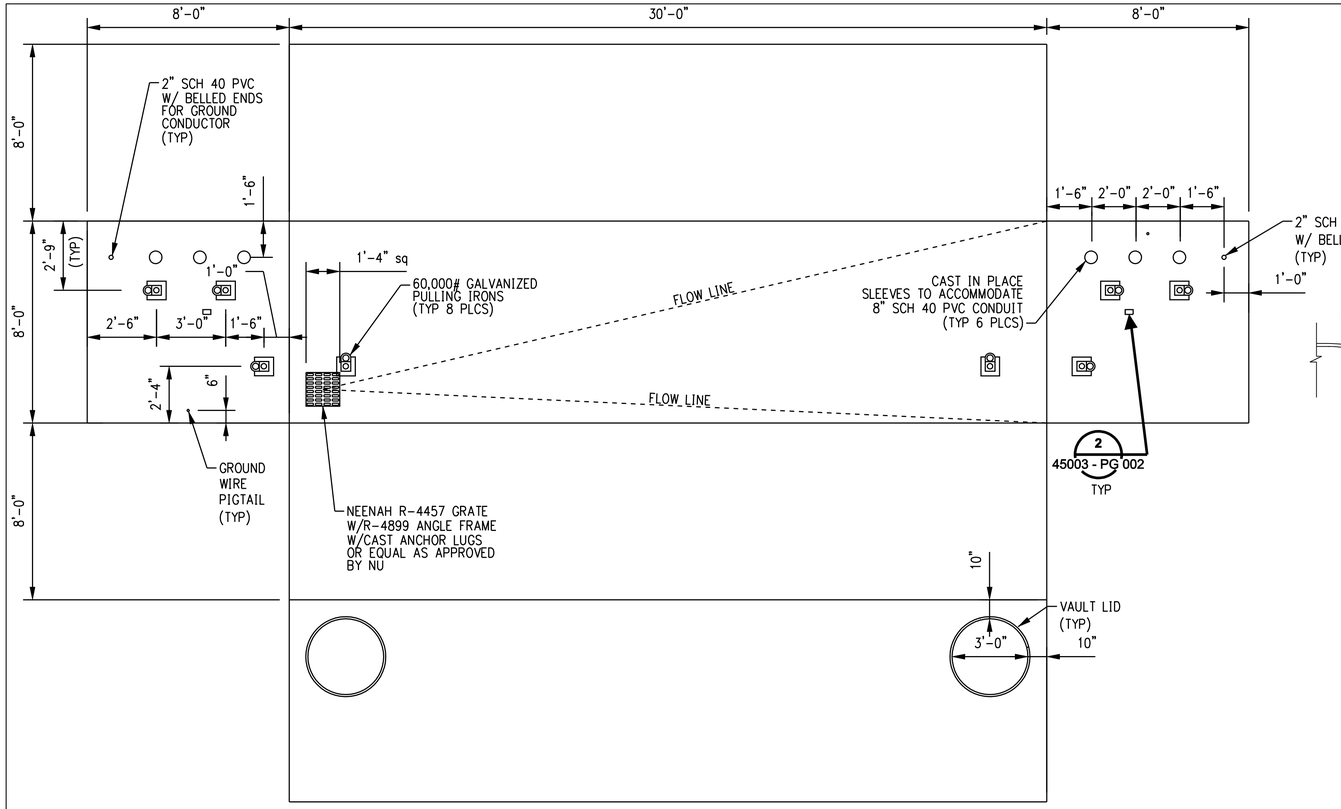

TYPICAL SPLICE VAULT DEVELOPMENT PLAN

DETAIL 5
NTS

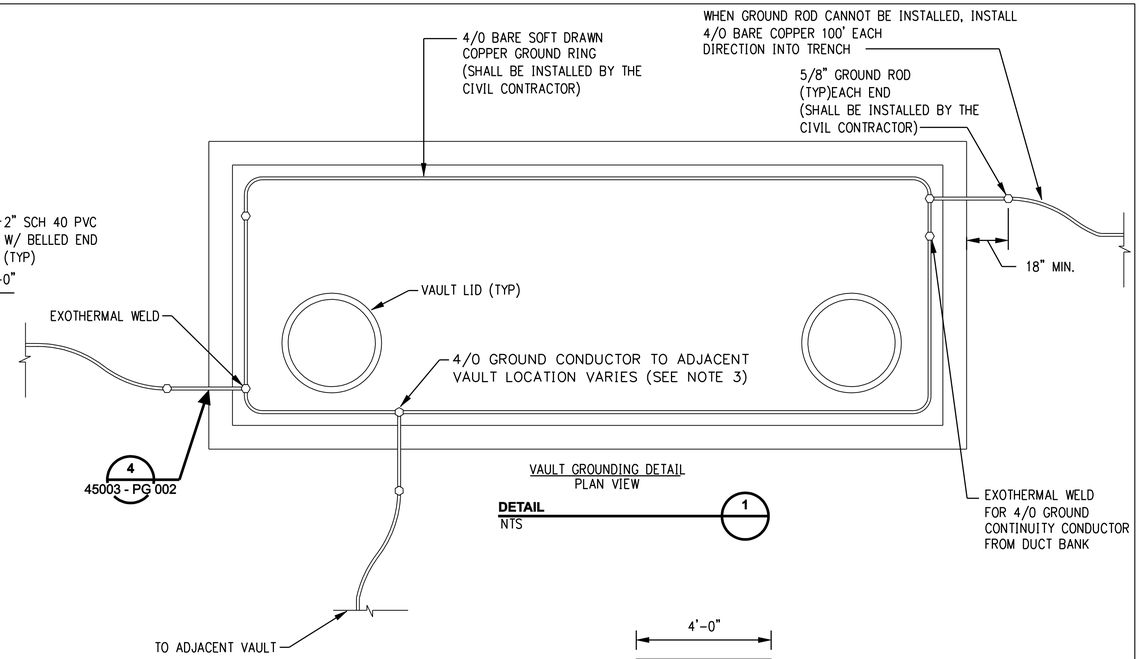

VAULT GROUNDING DETAIL
PLAN VIEW

DETAIL 1
NTS

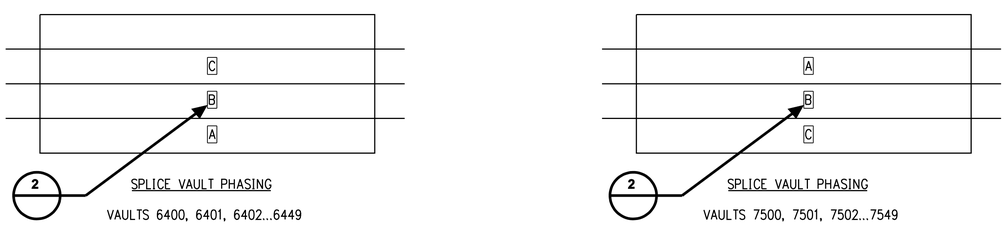

SPLICE VAULT PHASING

VAULTS 6400, 6401, 6402...6449

SPLICE VAULT PHASING

VAULTS 7500, 7501, 7502...7549

NOTES:

1. GROUND PIGTAILS TO EXTEND A MINIMUM OF 18 INCHES FROM BOTH SIDES OF VAULT WALL PENETRATION.
2. ALL EXTERNAL AREAS OF VAULT SHALL BE SEALED USING SONNEDORN HYDROCIDE 700 OR APPROVED NU EQUIVALENT.
3. EACH VAULT SHALL HAVE AN ADDITIONAL 2" SCHEDULE 40 PVC WITH BELLED ENDS CAST IN PLACE TO CONNECT INTERNAL VAULT GROUNDING AND COMPLETE CONNECTION WITH EXOTHERMAL WELD.

DETAIL 6
NTS

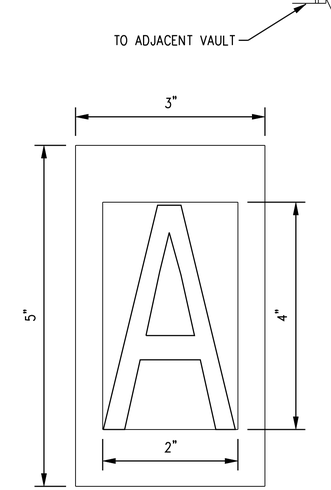

NOTES:

1. CHARACTER SHALL BE 4" HIGH BOLD TYPE.
2. CHARACTER SHALL BE CENTERED ON SIGN.
3. BACKGROUND: WHITE
   LETTERING: BLACK
   CHARACTERS: A, B & C AS SHOWN
4. ELECTRICAL CONTRACTOR SHALL ATTACH TAG TO SPLICE.

DETAIL 2
NTS

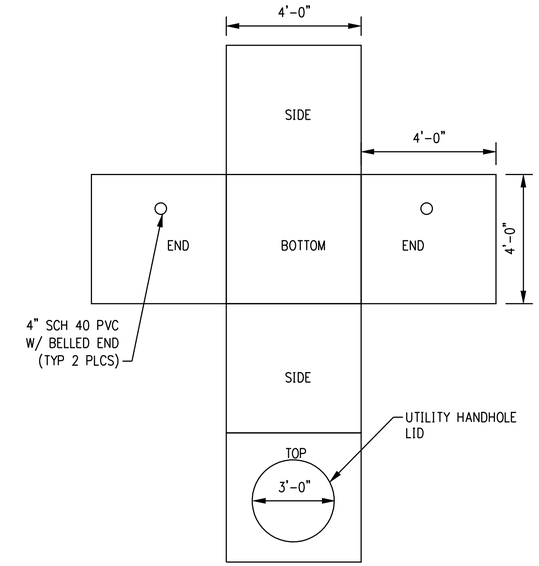

TYPICAL FIBER OPTIC HANDHOLE DEVELOPMENT PLAN

DETAIL 3
NTS

no.	date	revisions	by	chk
1	5/10/07	ISSUED CSC REVISED	CTC	

MF	NO.	DATE	REVISIONS	BY	CHK	APP	APP

Burns & McDonnell SINCE 1898

date 11/09/05 | detailed L. ROWSE
designed C. COURTRIGHT | checked S. NEWLAND

NORTHEAST UTILITIES SERVICE CO.

FOR THE CONNECTICUT LIGHT & POWER COMPANY

TITLE MIDDLETOWN-NORWALK 345kV TRANSMISSION PROJECT

VAULT, GROUNDING AND HANDHOLE DETAILS

BY SEN-BMCD	CHKD	APP	APP
DATE 11-09-05	DATE	DATE	DATE
SCALE AS NOTED	D	DWG. NO. 01224-45003 PG 001	

ISSUED FOR CONSTRUCTION

DOCKET No. 272

COPYRIGHT © 2007 BURNS & McDONNELL ENGINEERING COMPANY, INC.

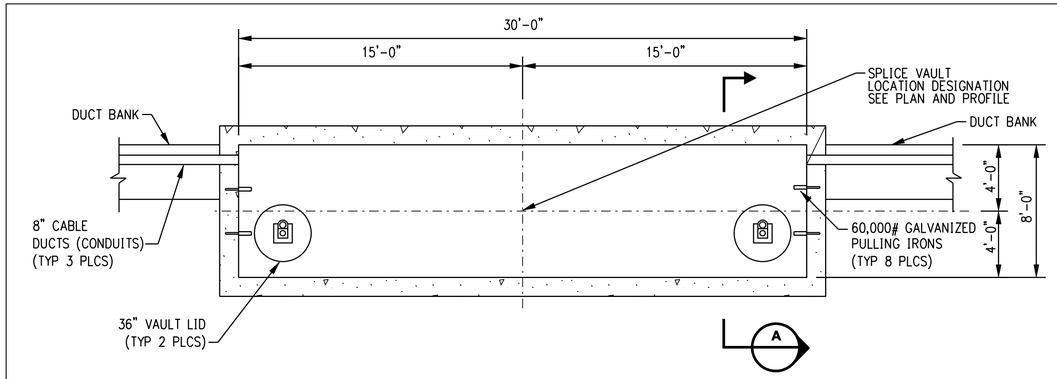

INTERIOR PLAN ELECTRICAL SPLICE VAULT

DETAIL 1
NTS

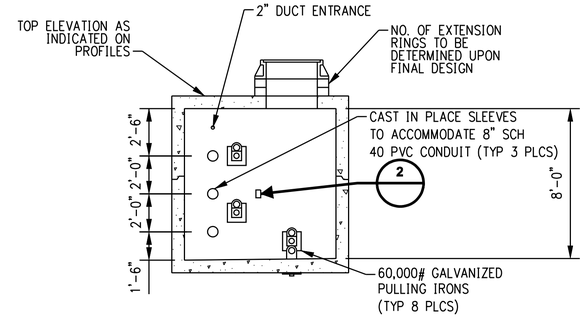

SPLICE VAULT

SECTION A
NTS

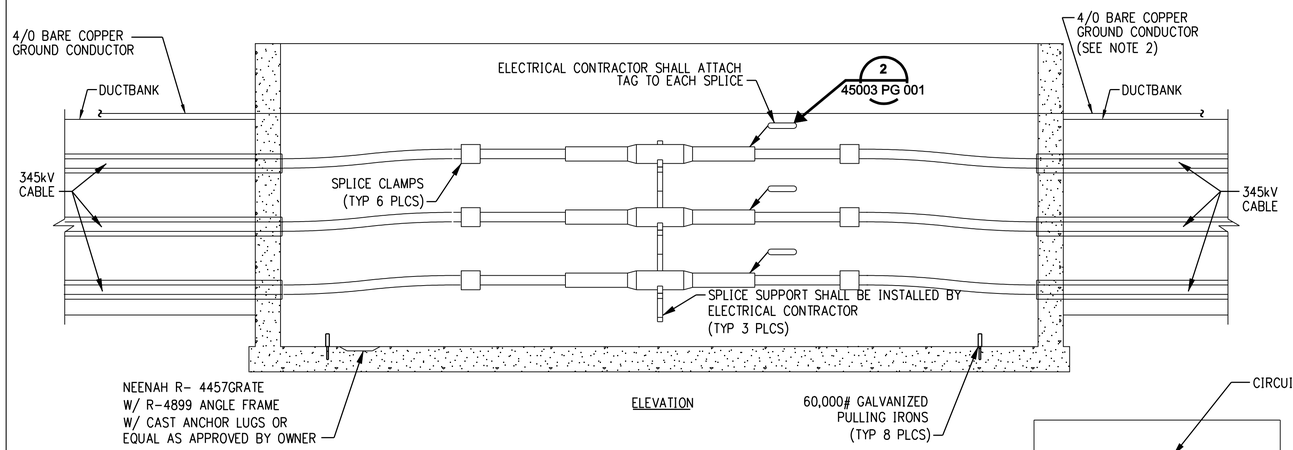

ELEVATION

SPLICE VAULT

DETAIL 3
NTS

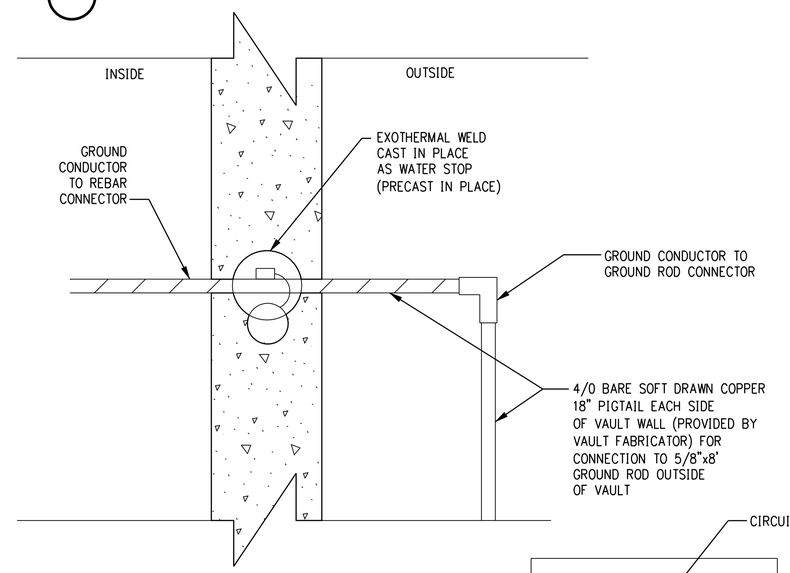

GROUND WIRE DETAIL
PROFILE VIEW

DETAIL 4
NTS

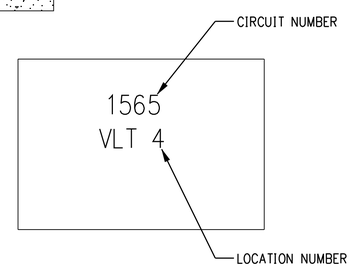

PROFILE VIEW

DETAIL 5
NTS

CIVIL CONTRACTOR SHALL ATTACH TAG 1'-6" BELOW FINISHED GRADE ON THE INSIDE OF THE EXTENSION RINGS AND ON THE VAULT WALL OPPOSITE THE RACKING

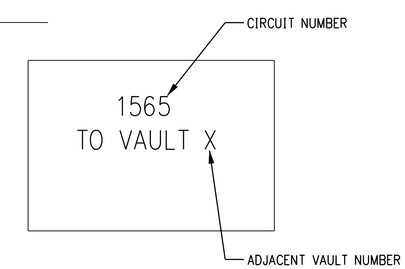

PROFILE VIEW

DETAIL 2
NTS

CIVIL CONTRACTOR SHALL ATTACH TAG TO EACH ENDWALL DESIGNATING NEXT ADJACENT VAULT IN CIRCUIT

NOTES:

1. PASS GROUND CONDUCTOR THROUGH VAULT WALL AND SUPPORT ALONG VAULT WALL.
2. BOND GROUNDS FROM EARTHING TO VAULT/ DUCTBANK GROUND.

DOCKET No. 272

ISSUED FOR CONSTRUCTION

no.	date	revisions	by	chk
1	5/10/07	ISSUED CSC REVISED	CTC	

Burns & McDonnell SINCE 1898

date 11/09/05 | detailed L. ROWSE
designed C. COURTRIGHT | checked S. NEWLAND

MF	NO.	DATE	REVISIONS	BY	CHK	APP	APP

NORTHEAST UTILITIES SERVICE CO.

FOR THE CONNECTICUT LIGHT & POWER COMPANY

TITLE MIDDLETOWN-NORWALK 345kV TRANSMISSION PROJECT

VAULT AND GROUNDING DETAILS

BY SEN-BMCD	CHKD	APP	APP
DATE 11-09-05	DATE	DATE	DATE
SCALE AS NOTED	D	DWG. NO. 01224-45003 PG 002	

COPYRIGHT © 2007 BURNS & McDONNELL ENGINEERING COMPANY, INC.

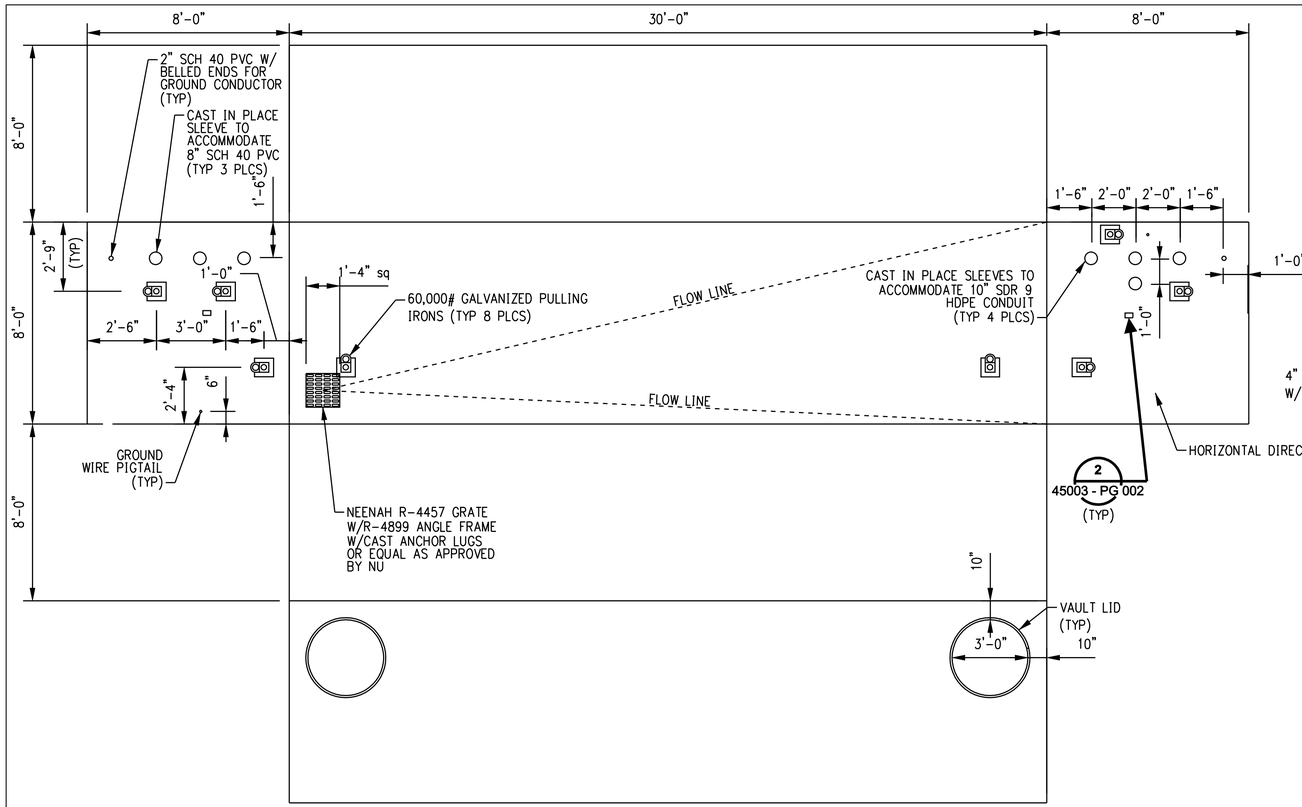

SPLICE VAULT DEVELOPMENT PLAN FOR VAULTS ADJACENT TO HORIZONTAL DIRECTIONAL DRILL CROSSINGS

DETAIL 2
NTS

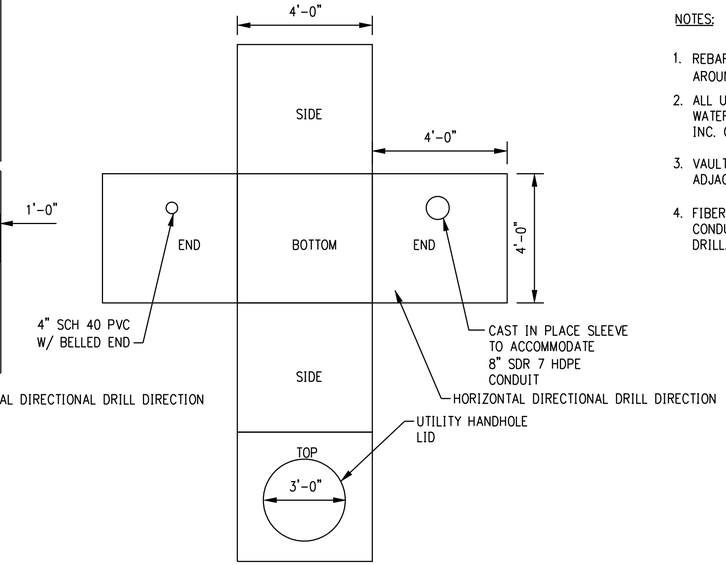

HORIZONTAL DIRECTIONAL DRILL FIBER OPTIC HANDHOLE

DETAIL 3
NTS

NOTES:

1. REBAR WITHIN SPLICE CHAMBER WALLS SHALL NOT FORM A LOOP AROUND ANY 8" CONDUIT OPENING.
2. ALL UNUSED CONDUITS SHALL BE PLUGGED AND SEALED USING WATERTIGHT DUCT PLUGS AS MANUFACTURED BY JACKMOON USA, INC. OR ACCEPTABLE EQUAL.
3. VAULT ENDS HAVING HDPE SPARE DUCTS ARE ORIENTED TOWARD ADJACENT HORIZONTAL DIRECTIONAL DRILL CROSSINGS.
4. FIBER OPTIC HANDHOLES HAVING SLEEVES TO ACCOMODATE HDPE CONDUITS SHALL BE ORIENTED TOWARD THE HORIZONTAL DIRECTIONAL DRILL.

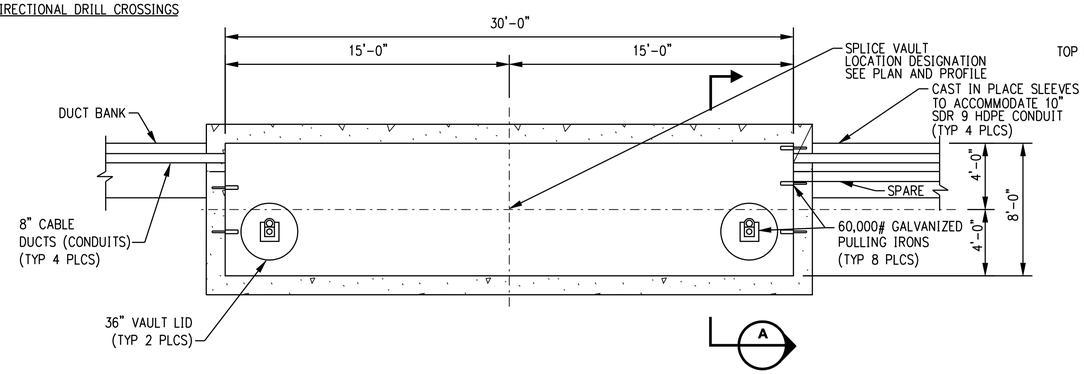

INTERIOR PLAN OF ELECTRICAL SPLICE VAULTS
ADJACENT TO HORIZONTAL DIRECTIONAL DRILL CROSSINGS

DETAIL 1
NTS

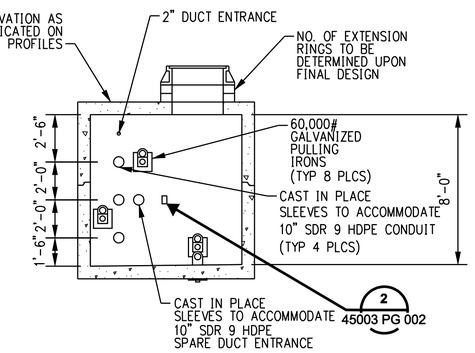

HORIZONTAL DIRECTIONAL DRILL SPLICE VAULT

SECTION A
NTS

COPYRIGHT © 2007 BURNS & McDONNELL ENGINEERING COMPANY, INC.

DOCKET No. 272

ISSUED FOR CONSTRUCTION

no.	date	revisions	by	chk
1	5/10/07	ISSUED CSC REVISED	CTC	

Burns & McDonnell SINCE 1898

date 05/05/06
designed C. COURTRIGHT
detailed L. ROWSE
checked S. NEWLAND

MF	NO.	DATE	REVISIONS	BY	CHK	APP	APP

NORTHEAST UTILITIES SERVICE CO.

FOR THE CONNECTICUT LIGHT & POWER COMPANY

TITLE MIDDLETOWN–NORWALK 345kV TRANSMISSION PROJECT

HORIZONTAL DIRECTIONAL DRILL SPLICE VAULT DETAILS

BY SEN–BMCD	CHKD	APP	APP
DATE 5–05–06	DATE	DATE	DATE
SCALE AS NOTED	D	DWG. NO. 01224–45003 PG 004	

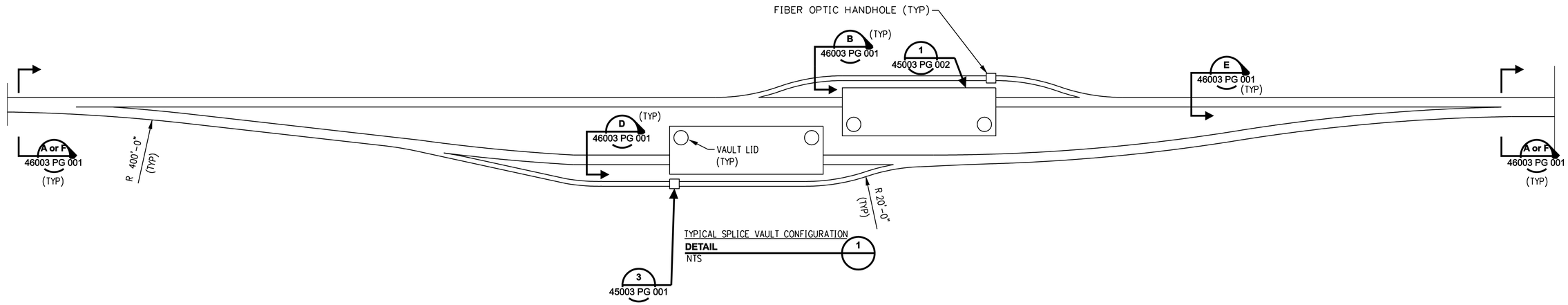

TYPICAL SPLICE VAULT CONFIGURATION
DETAIL 1
NTS

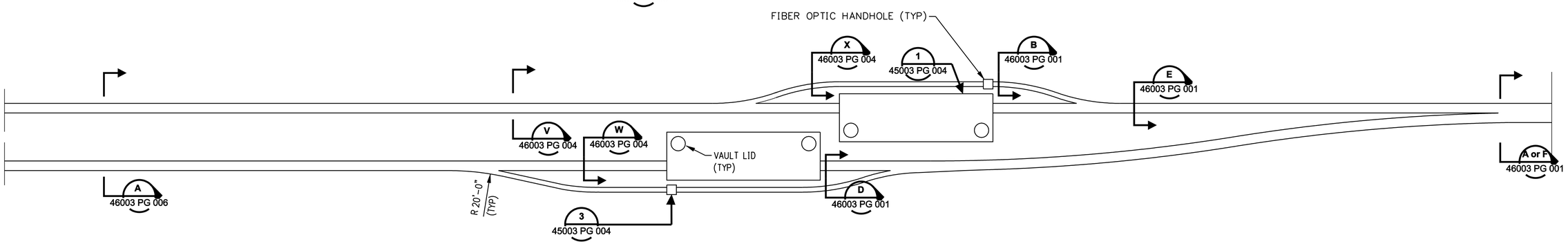

SPLICE VAULT 6415/7515 CONFIGURATION
DETAIL 2
NTS

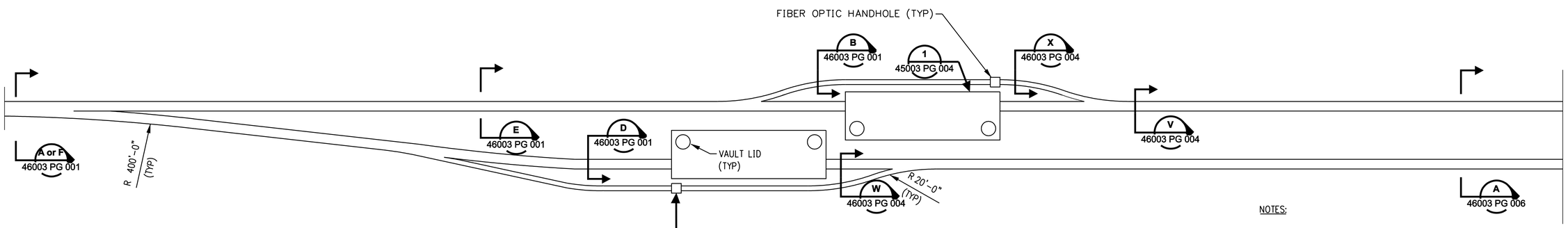

SPLICE VAULT 6414/7514 CONFIGURATION
DETAIL 3
NTS

NOTES:

1. THE VAULT DEVELOPMENT PLAN IS A TYPICAL DESIGN FOR THE 345KV VAULT. ORIENTATION FOR EACH VAULT SHALL BE IN ACCORDANCE WITH THE PLAN & PROFILE DRAWINGS.

no.	date	revisions	by	chk
1	5/10/07	ISSUED CSC REVISED	CTC	

ISSUED FOR CONSTRUCTION

DOCKET No. 272

Burns & McDonnell SINCE 1898

date 07/14/06 | detailed L. ROWSE
designed C. COURTRIGHT | checked S. NEWLAND

MF	NO.	DATE	REVISIONS	BY	CHK	APP	APP

NORTHEAST UTILITIES SERVICE CO.

FOR THE CONNECTICUT LIGHT & POWER COMPANY

TITLE MIDDLETOWN-NORWALK 345kV TRANSMISSION PROJECT
TYPICAL/CROSSING SPLICE VAULT DETAILS
SEGMENT 4B

BY SEN-BMCD	CHKD	APP	APP
DATE 7-14-06	DATE	DATE	DATE
SCALE AS NOTED	D	DWG. NO. 01224-45003 PG 007	

COPYRIGHT © 2007 BURNS & McDONNELL ENGINEERING COMPANY, INC.

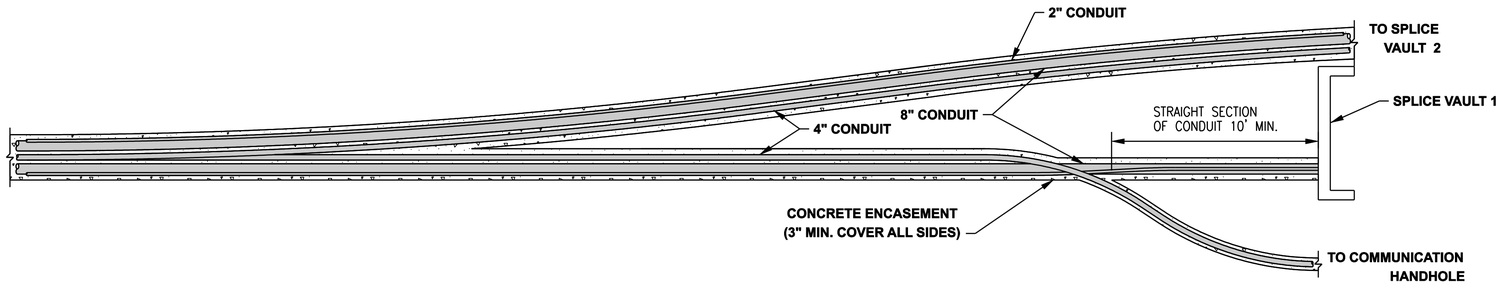

PLAN

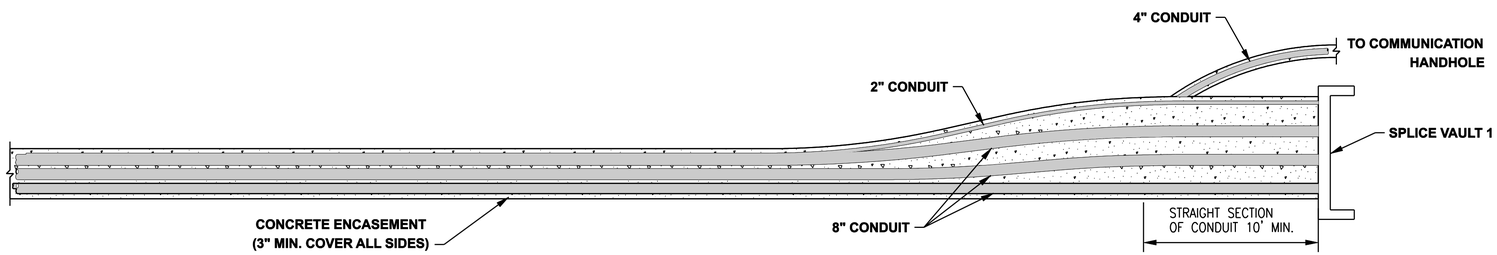

PROFILE

DUCT BANK CONDUIT TRANSITION

DETAIL 1

COPYRIGHT © 2007 BURNS & McDONNELL ENGINEERING COMPANY, INC.

DOCKET No. 272

ISSUED FOR CONSTRUCTION

no.	date	revisions	by	chk
1	5/10/07	ISSUED CSC REVISED	CTC	

Burns & McDonnell SINCE 1898

date 07/05/06
designed C. COURTRIGHT
detailed L. ROWSE
checked S. NEWLAND

MF	NO.	DATE	REVISIONS	BY	CHK	APP	APP

NORTHEAST UTILITIES SERVICE CO.

FOR THE CONNECTICUT LIGHT & POWER COMPANY

TITLE MIDDLETOWN–NORWALK 345kV TRANSMISSION PROJECT

CONDUIT TRANSITIONS

BY SEN–BMCD	CHKD	APP	APP
DATE 7–05–06	DATE	DATE	DATE
SCALE AS NOTED	D	DWG. NO. 01224–45003 PG 010	

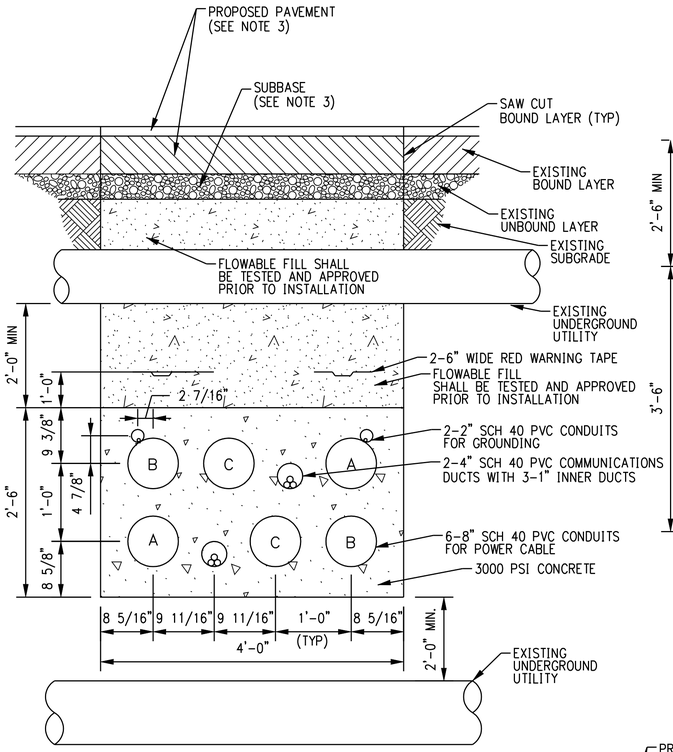

DUCT BANK CONFIGURATION WITH UTILITY CLEARANCE

DETAIL 1
NTS

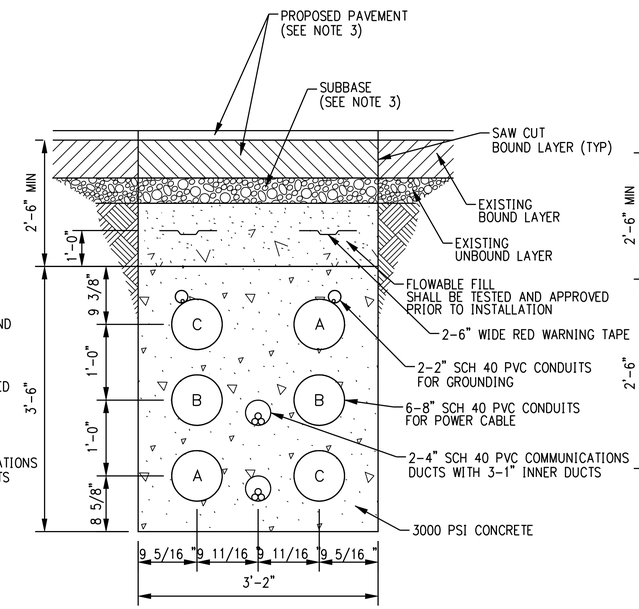

TYPICAL VERTICAL DUCT BANK

SECTION F
NTS

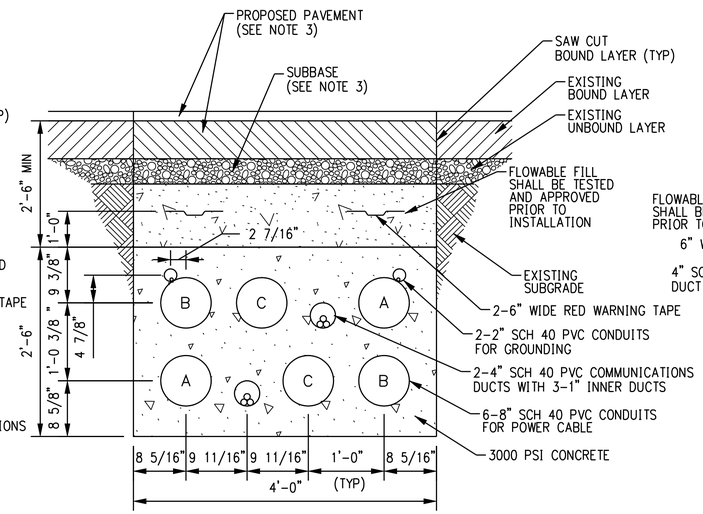

TYPICAL HORIZONTAL DUCT BANK

SECTION A
NTS

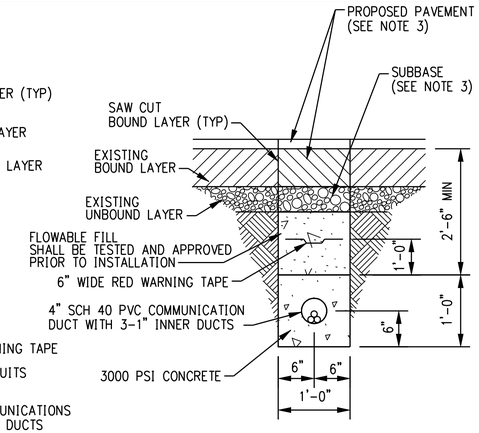

TYPICAL COMMUNICATIONS DUCT BANK

SECTION B
NTS

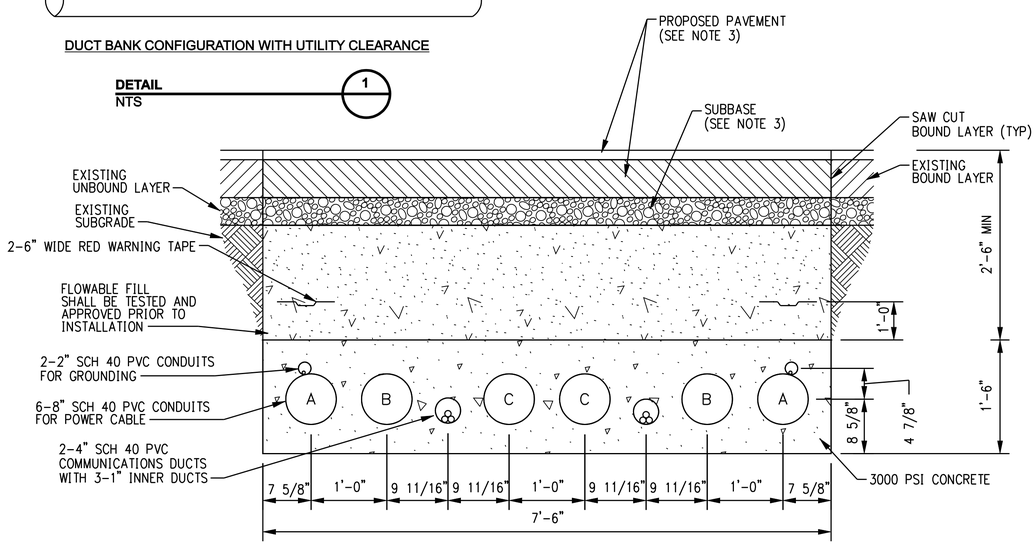

REDUCED-HEIGHT DUCT BANK

SECTION C
NTS

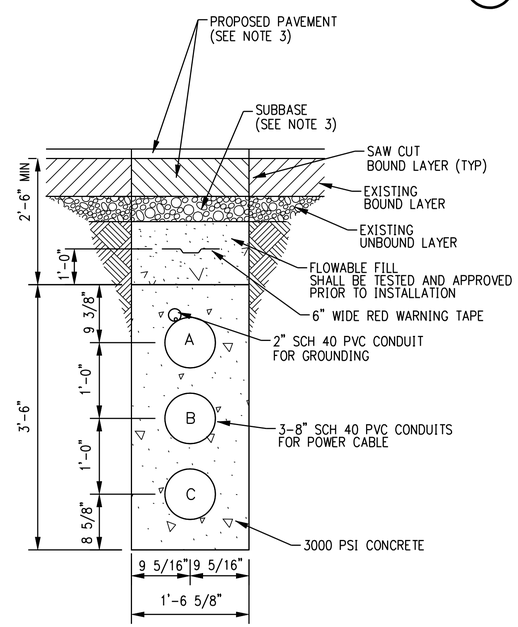

SINGLE CIRCUIT DUCT BANK

SECTION D
NTS

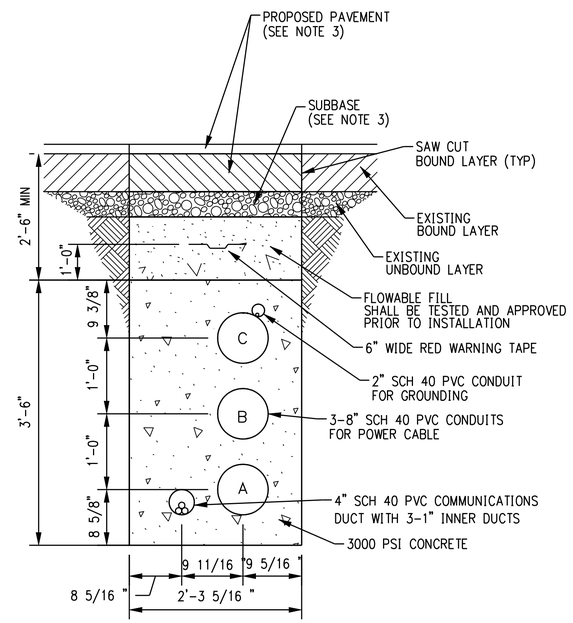

SINGLE CIRCUIT WITH COMMUNICATIONS DUCT BANK

SECTION E
NTS

GENERAL NOTES:

1. STANDARD TRENCH WITH PERMANENT PAVEMENT RESTORATION IN STATE HIGHWAY SHOWN. PAVEMENT RESTORATION REQUIREMENTS SHALL VARY DEPENDENT ON SPECIFIC EXISTING PAVEMENT CROSS SECTIONS AND MATERIALS.
2. OMITTED
3. REFERENCE RESTORATION DRAWINGS FOR PROPOSED PAVEMENT SECTIONS.

ISSUED FOR CONSTRUCTION

no.	date	revisions	by	chk
1	5/10/07	ISSUED CSC REVISED	CTC	

Burns & McDonnell SINCE 1898

date 11/09/05 | detailed BL COMPANIES
designed BL COMPANIES | checked S. NEWLAND

MF	NO.	DATE	REVISIONS	BY	CHK	APP	APP

NORTHEAST UTILITIES SERVICE CO.

FOR THE CONNECTICUT LIGHT & POWER COMPANY

TITLE MIDDLETOWN–NORWALK 345kV TRANSMISSION PROJECT

TYPICAL DUCT BANK DETAILS

BY SEN–BMCD	CHKD	APP	APP
DATE 11–09–05	DATE	DATE	DATE
SCALE AS NOTED	D	DWG. NO. 01224–46003 PG 001	

COPYRIGHT © 2007 BURNS & McDONNELL ENGINEERING COMPANY, INC.

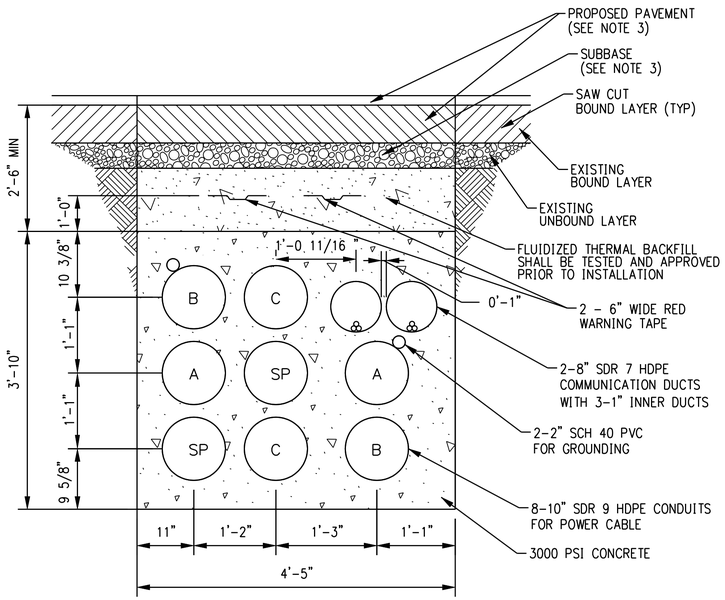

TYPICAL HORIZONTAL DIRECTIONAL DRILL DUCT BANK

SECTION Y
NTS

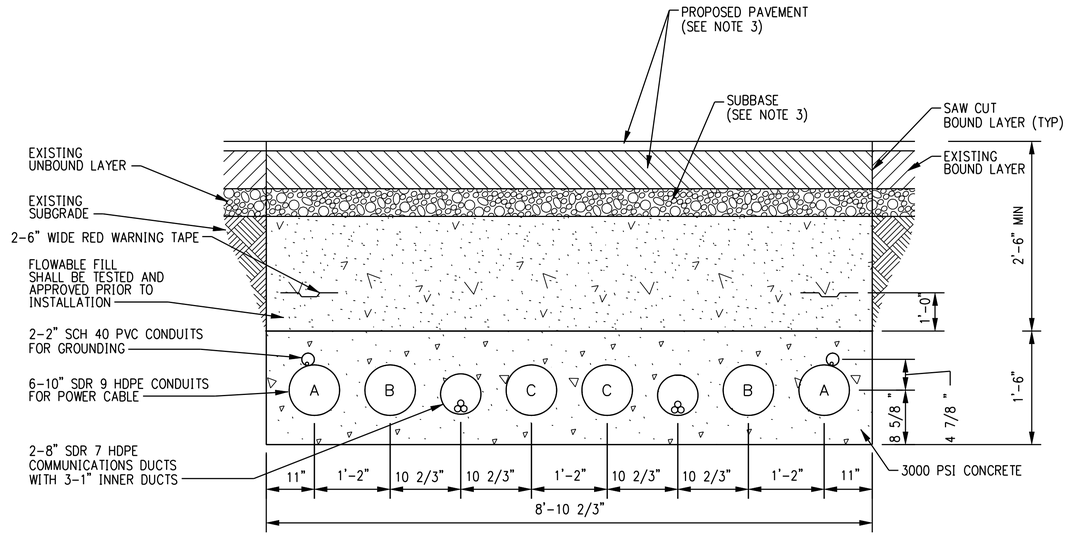

REDUCED-HEIGHT HORIZONTAL DIRECTIONAL DRILL DUCT BANK

SECTION Z
NTS

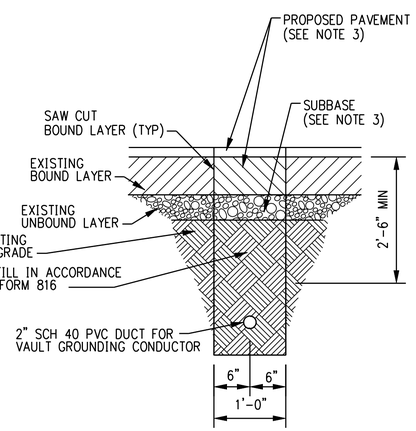

TYPICAL GROUNDING DUCT BANK

SECTION AA
NTS

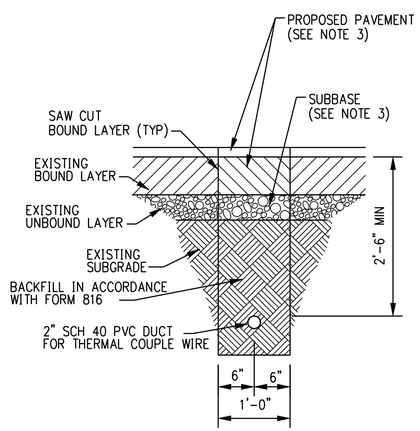

TYPICAL THERMAL COUPLE WIRE DUCT BANK

SECTION BB
NTS

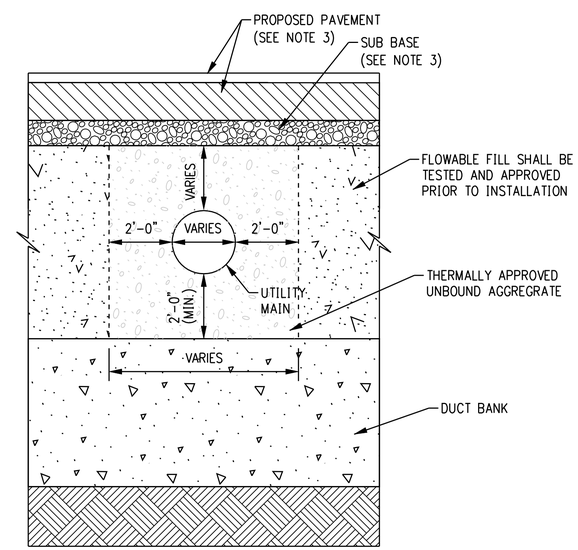

TYPICAL GAS UTILITY CROSSING

SECTION M
NTS

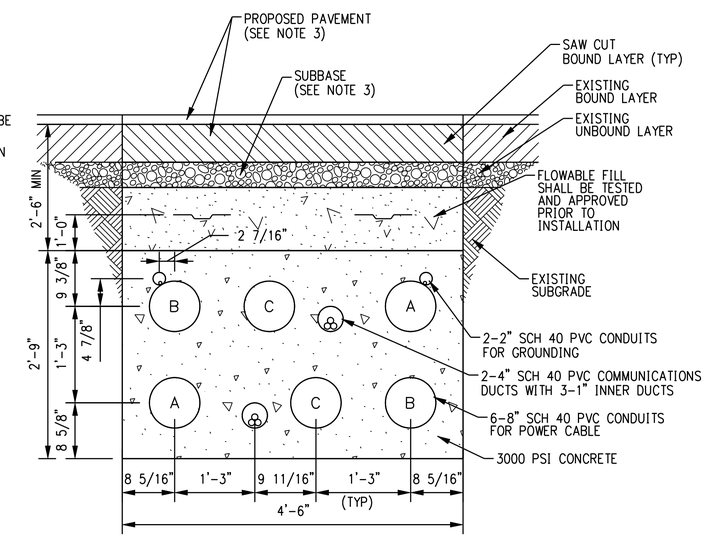

15" PHASE-SPACING DUCT BANK

SECTION N
NTS

GENERAL NOTES:

1. STANDARD TRENCH WITH PERMANENT PAVEMENT RESTORATION IN STATE HIGHWAY SHOWN. PAVEMENT RESTORATION REQUIREMENTS SHALL VARY DEPENDENT ON SPECIFIC EXISTING PAVEMENT CROSS SECTIONS AND MATERIALS.
2. OMITTED
3. REFERENCE RESTORATION DRAWINGS FOR PROPOSED PAVEMENT SECTIONS.

DOCKET No. 272

ISSUED FOR CONSTRUCTION

no.	date	revisions	by	chk
1	5/10/07	ISSUED CSC REVISED	CTC	

Burns & McDonnell SINCE 1898

date 11/09/05 | detailed L. ROWSE
designed C. COURTRIGHT | checked S. NEWLAND

MF	NO.	DATE	REVISIONS	BY	CHK	APP	APP

NORTHEAST UTILITIES SERVICE CO.

FOR THE CONNECTICUT LIGHT & POWER COMPANY

TITLE MIDDLETOWN-NORWALK 345kV TRANSMISSION PROJECT
UTILITY BRIDGE DUCT BANK DETAILS AND UTILITY CROSSING DETAIL

BY SEN-BMCD	CHKD	APP	APP
DATE 11-09-05	DATE	DATE	DATE
SCALE AS NOTED	D	DWG. NO. 01224-46003 PG 002	

COPYRIGHT © 2007 BURNS & McDONNELL ENGINEERING COMPANY, INC.

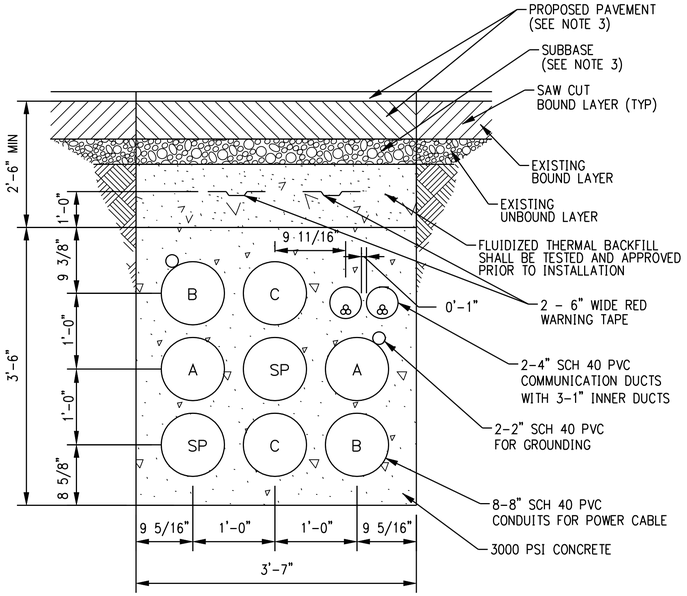

TYPICAL JACK AND BORE DUCT BANK

SECTION S
NTS

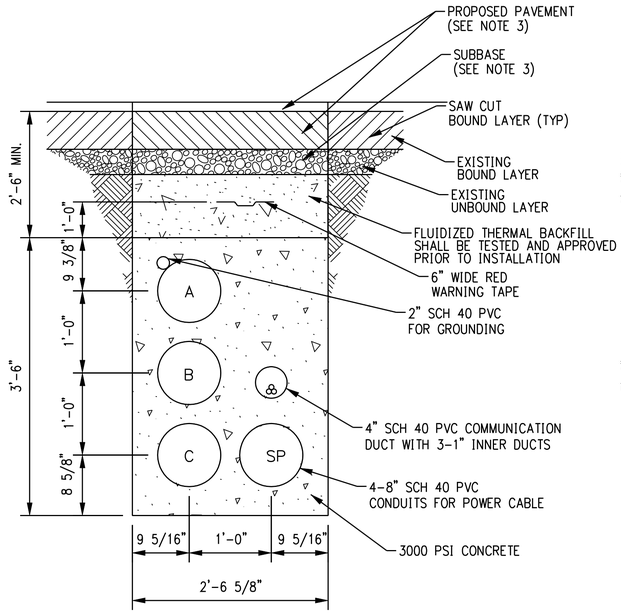

JACK AND BORE SINGLE CIRCUIT WITH COMMUNICATIONS DUCT BANK

SECTION T
NTS

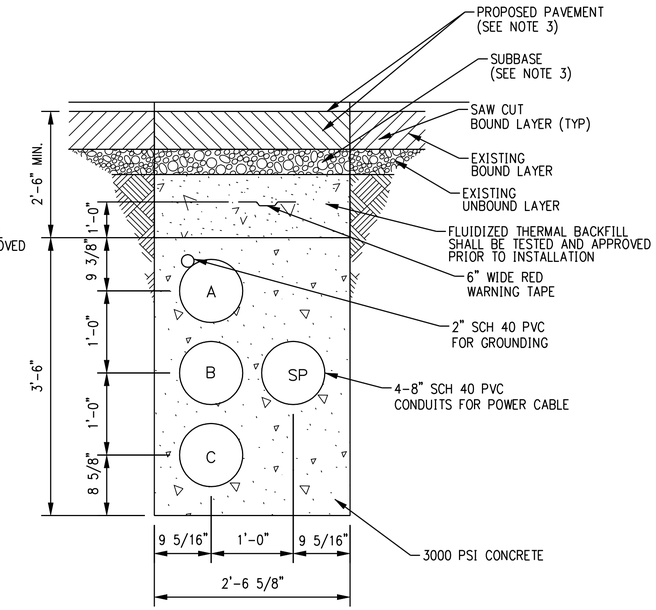

JACK AND BORE SINGLE CIRCUIT DUCT BANK

SECTION U
NTS

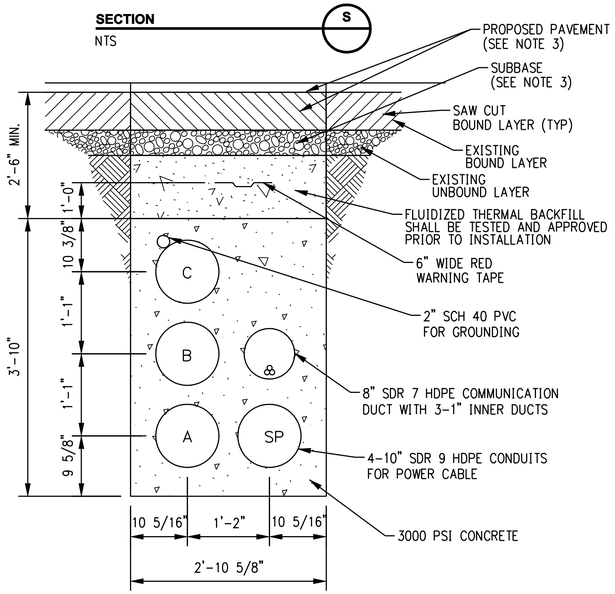

HORIZONTAL DIRECTIONAL DRILL SINGLE CIRCUIT WITH COMMUNICATIONS DUCT BANK

SECTION V
NTS

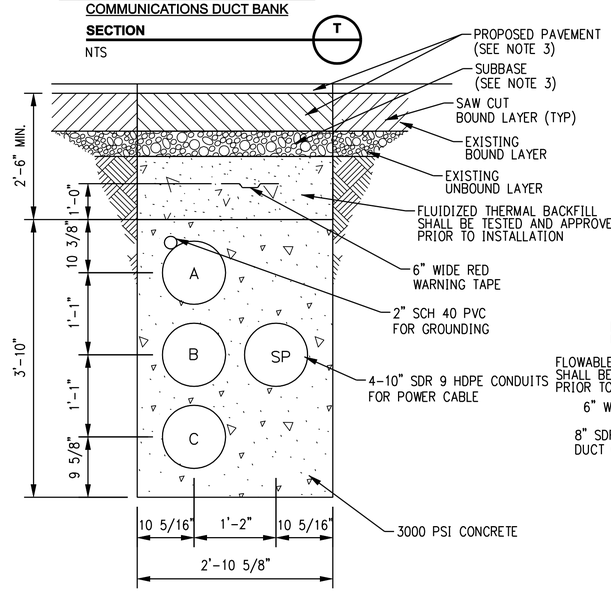

HORIZONTAL DIRECTIONAL DRILL SINGLE CIRCUIT DUCT BANK

SECTION W
NTS

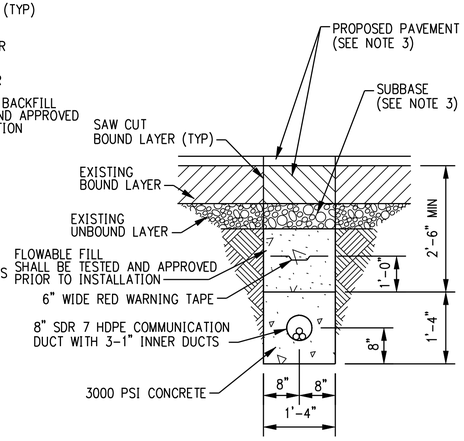

HORIZONTAL DIRECTIONAL DRILL COMMUNICATIONS DUCT BANK

SECTION X
NTS

GENERAL NOTES:

1. STANDARD TRENCH WITH PERMANENT PAVEMENT RESTORATION IN STATE HIGHWAY SHOWN. PAVEMENT RESTORATION REQUIREMENTS SHALL VARY DEPENDENT ON SPECIFIC EXISTING PAVEMENT CROSS SECTIONS AND MATERIALS.
2. OMITTED
3. REFERENCE RESTORATION DRAWINGS FOR PROPOSED PAVEMENT SECTIONS.

DOCKET No. 272

ISSUED FOR CONSTRUCTION

no.	date	revisions	by	chk
1	5/10/07	ISSUED CSC REVISED	CTC	

Burns & McDonnell SINCE 1898

date 11/09/05 | detailed L. ROWSE
designed C. COURTRIGHT | checked S. NEWLAND

MF	NO.	DATE	REVISIONS	BY	CHK	APP	APP

NORTHEAST UTILITIES SERVICE CO.

FOR THE CONNECTICUT LIGHT & POWER COMPANY

TITLE MIDDLETOWN-NORWALK 345kV TRANSMISSION PROJECT
JACK AND BORE, HORIZONTAL DIRECTIONAL DRILL AND UTILITY BRIDGE DUCT BANK DETAILS

BY SEN-BMCD	CHKD	APP	APP
DATE 11-09-05	DATE	DATE	DATE
SCALE AS NOTED	D	DWG. NO. 01224-46003 PG 004	

COPYRIGHT © 2007 BURNS & McDONNELL ENGINEERING COMPANY, INC.

Cable Pulling Direction and Tension			
Middletown-Norwalk 345-kV Transmission Line Project			
Segment 4b			
Norwalk / Westport, CT			
Cable Pulling Direction		Calculated Tension	Calculated Maximum Side Wall Pressure
From Vault	To Vault	(lb.)	(lb/ft.)
6	5	15,100	150
6	7	17,800	90
8	7	14,300	100
8	9	15,000	70
9	10	15,100	70
10	11	19,000	90
12	11	17,100	90
12	13	17,500	160
14	13	17,400	110
14	15	14,200	70
16	15	18,000	120
17	16	13,600	70
18	17	13,100	70
19	18	16,100	80
19	20	12,600	60
20	21	13,200	70
22	21	16,400	90
22	23	17,800	90
23	24	18,900	100
24	25	19,300	160
25	26	16,100	80
26	27	19,600	100

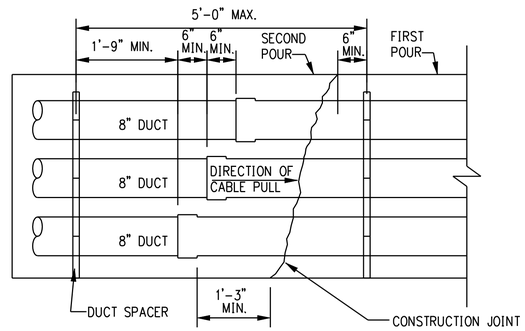

CONSTRUCTION JOINT DETAIL

DETAIL 1
NTS

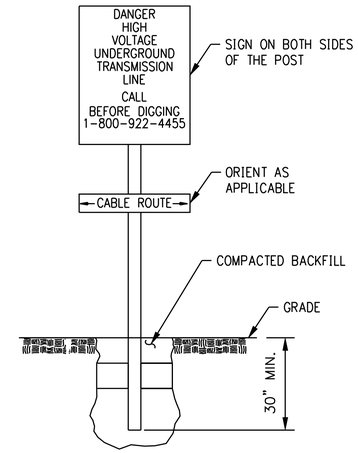

TYPICAL WARNING SIGN

DETAIL 2
NTS

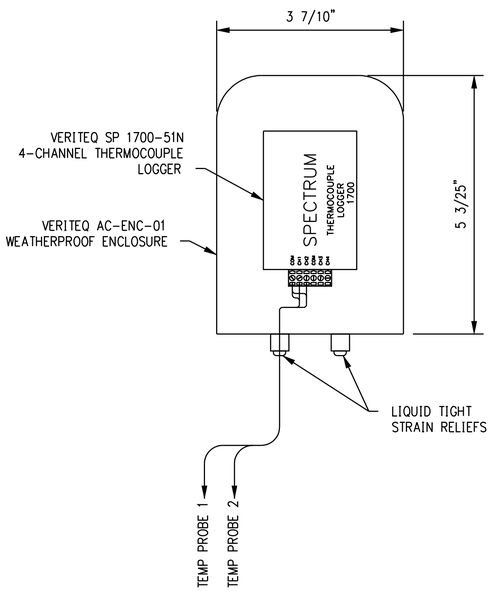

THERMOCOUPLE TEMPERATURE DATA LOGGER

DETAIL 4
NTS

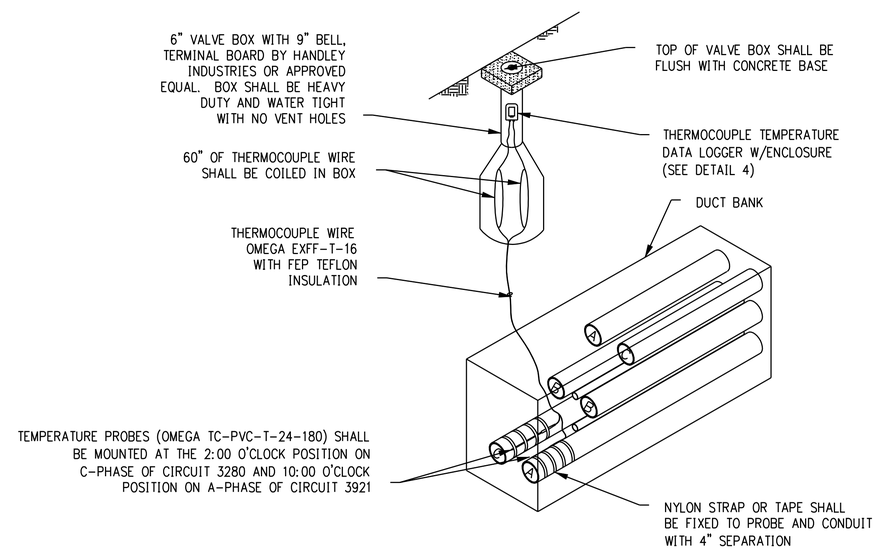

TEMPERATURE MONITORING STATION INSTALLATION

DETAIL 5
NTS

TEMPERATURE MONITORING STATION TABLE	
TMS #'S	CENTER OF TMS
TMS #05	N 605,759.6611 E 818,094.6606
TMS #06	N 605,626.1414 E 819,370.7655
TMS #07	N 606,597.0622 E 821,111.4377
TMS #08	N 606,983.5426 E 822,299.0121
TMS #09	N 607,577.7222 E 824,146.2437
TMS #10	N 608,022.9223 E 825,733.9030
TMS #11	N 608,647.2377 E 826,972.9375
TMS #12	N 610,076.3556 E 828,321.8666
TMS #13	N 611,094.1367 E 829,154.0611
TMS #14	N 611,487.4096 E 830,415.3439
TMS #15	N 611,676.8788 E 832,369.9627
TMS #16	N 612,788.3921 E 832,578.8496
TMS #17	N 612,351.8879 E 834,472.6634
TMS #18	N 611,918.8894 E 836,053.7588
TMS #19	N 611,407.8334 E 837,558.8288
TMS #20	N 611,715.2465 E 839,254.3331
TMS #21	N 611,840.5242 E 840,565.5223
TMS #22	N 611,815.1526 E 842,284.0577
TMS #23	N 611,828.2142 E 843,734.2116
TMS #24	N 611,760.6005 E 845,614.6441
TMS #25	N 611,611.3396 E 847,364.9239
TMS #26	N 611,551.1712 E 848,685.4621

DOCKET No. 272

ISSUED FOR CONSTRUCTION

no.	date	revisions	by	chk
1	5/10/07	ISSUED CSC REVISED	CTC	

Burns & McDonnell SINCE 1898

date 11/09/05
designed C. COURTRIGHT
detailed L. ROWSE
checked S. NEWLAND

MF	NO.	DATE	REVISIONS	BY	CHK	APP	APP

NORTHEAST UTILITIES SERVICE CO.

FOR THE CONNECTICUT LIGHT & POWER COMPANY

TITLE MIDDLETOWN-NORWALK 345kV TRANSMISSION PROJECT

CABLE AND TEMPERATURE MONITORING DETAILS

BY SEN-BMCD	CHKD	APP	APP
DATE 11-09-05	DATE	DATE	DATE
SCALE AS NOTED	D	DWG. NO. 01224-46003 PG 005	

COPYRIGHT © 2007 BURNS & McDONNELL ENGINEERING COMPANY, INC.

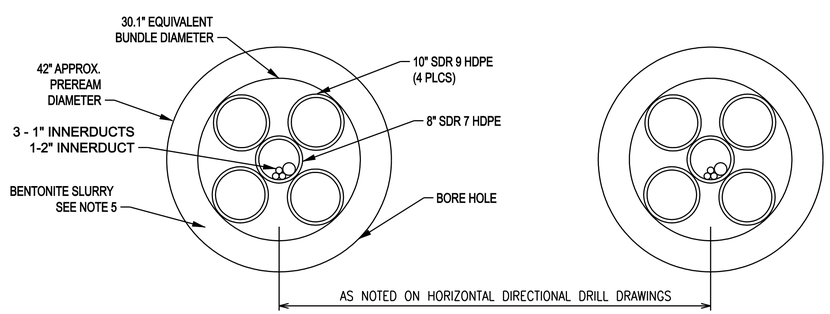

HORIZONTAL DIRECTIONAL DRILL

SECTION A
NTS

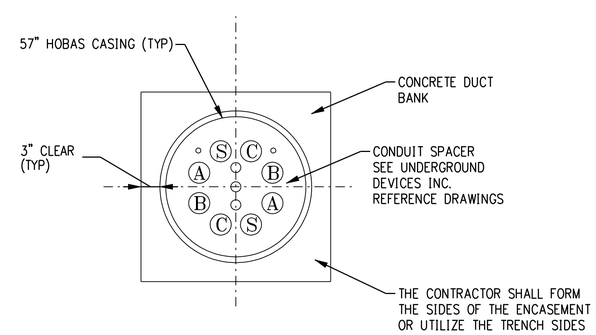

JACK AND BORE

SECTION B
NTS

NOTES:

1. ALL CASING SHALL BE COMPLETELY FILLED WITH A THERMALLY ACCEPTABLE GROUT. GROUT MIX DESIGN SHALL MEET PROJECT SPECIFICATIONS.
2. GROUT SAMPLES SHALL BE SUBMITTED TO THE TEST COMPANY (CONTACT TEST COMPANY FOR APPROPRIATE SIZE & METHOD OF TRANSPORTATION) IN ACCORDANCE WITH THE SPECIFICATIONS.
3. CONTRACTOR SHALL FURNISH AND INSTALL CASING PIPE SPACER. SPACERS SHALL BE INSTALLED A MAXIMUM DISTANCE OF 5 FEET APART. SPACERS SHALL BE INSTALLED PER MANUFACTURES RECOMMENDATIONS.
4. CONTRACTOR SHALL SUBMIT DETAILED DESIGN OF EACH BORED CROSSING FOR REVIEW, INCLUDING AS A MINIMUM WORK PLAN, EQUIPMENT AND MATERIALS TO BE USED, WORK AREAS, BORE PIT SIZES AND LOCATIONS.
5. BENTONITE SLURRY SAMPLES SHALL BE SUBMITTED TO THE TEST COMPANY (CONTACT TEST COMPANY FOR APPROPRIATE SIZE & METHOD OF TRANSPORTATION) IN ACCORDANCE WITH THE SPECIFICATIONS.

DOCKET No. 272

ISSUED FOR CONSTRUCTION

no.	date	revisions	by	chk
1	5/10/07	ISSUED CSC REVISED	CTC	

Burns & McDonnell SINCE 1898

date 6/15/06 | detailed L. ROWSE
designed C. COURTRIGHT | checked S. NEWLAND

MF	NO.	DATE	REVISIONS	BY	CHK	APP	APP

NORTHEAST UTILITIES SERVICE CO.

FOR THE CONNECTICUT LIGHT & POWER COMPANY

TITLE MIDDLETOWN–NORWALK 345kV TRANSMISSION PROJECT
HORIZONTAL DIRECTIONAL DRILL AND JACK AND BORE SECTIONS

BY SEN–BMCD	CHKD	APP	APP
DATE 6/15/06	DATE	DATE	DATE
SCALE AS NOTED	D	DWG. NO. 01224–46003 PG 006	

COPYRIGHT © 2007 BURNS & McDONNELL ENGINEERING COMPANY, INC.

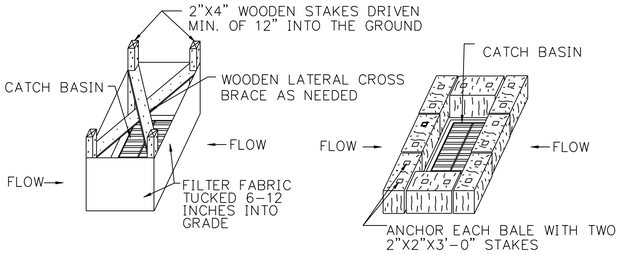

SILT FENCE INSTALLATION AT CATCH BASINS AT LOW POINTS

HAY BALE FILTER INSTALLATION AT CATCH BASIN AT LOW POINTS

STORMWATER INLETS WHICH DO NOT DISCHARGE TO SEDIMENT TRAPS OR BASINS, SHALL BE PROTECTED UNTIL THE TRIBUTARY AREAS ARE STABILIZED.
SEDIMENT SHALL BE REMOVED FROM INLET PROTECTION AFTER EACH STORM EVENT.

CATCH BASIN EROSION CONTROL

DETAIL 1
NTS ~

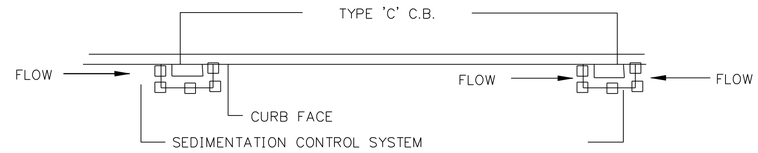

PLAN
FOR TYPE 'C' C.B
(ON GRADE)

PLAN
FOR TYPE 'C' CB
(AT LOW POINT)

NOTE:
SEDIMENTATION CONTROL SYSTEMS SHALL BE LOCATED AT ALL EXISTING OR PROPOSED BASINS WHICH ACCEPT FLOW FROM THE CONSTRUCTION AREA UNTIL TURF ESTABLISHMENT OR AS DIRECTED BY THE ENGINEER.

DETAIL 2
NTS ~

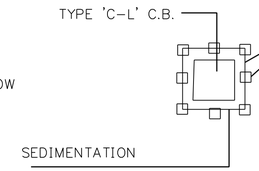

SEDIMENTATION
CONTROL SYSTEM

PLAN

FOR TYPE 'C-L' C.B.

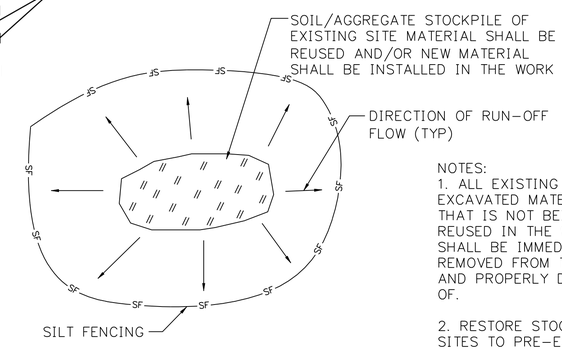

NOTES:
1. ALL EXISTING EXCAVATED MATERIAL THAT IS NOT BEING REUSED IN THE WORK SHALL BE IMMEDIATELY REMOVED FROM THE SITE AND PROPERLY DISPOSED OF.

2. RESTORE STOCKPILE SITES TO PRE-EXISTING PROJECT CONDITION AND RESEED AS REQUIRED.

3. STOCKPILE HEIGHTS SHALL NOT EXCEED 35'. STOCKPILE SLOPES SHALL BE 2:1 OR FLATTER.

MATERIALS STOCKPILE

DETAIL 3
NTS ~

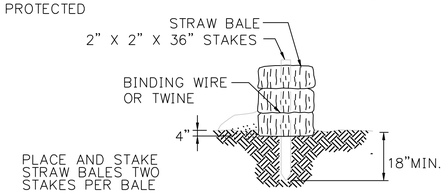

STRAW BALE BARRIERS SHALL NOT BE USED FOR MORE THAN 3 MONTHS

SEDIMENT SHALL BE REMOVED WHEN ACCUMULATIONS REACH 1/3 THE ABOVE GROUND HEIGHT OF THE BARRIER.

ANY SECTION OF STRAW BALE BARRIER WHICH HAS BEEN UNDERMINED OR TOPPED SHALL BE IMMEDIATELY REPLACED WITH A ROCK FILTER OUTLET.

HAYBALE BARRIER

DETAIL 4
NTS ~

NOTE:
USE FOR IN-STREAM OR SWALE SEDIMENT INTERCEPTION.
LOCATE NOT TO BACKWATER ONTO WORK AREA.

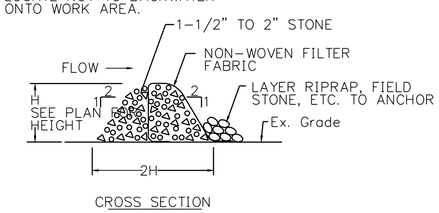

CROSS SECTION

STONE FILTER BERM W/ FILTER FABRIC

DETAIL 5
NTS ~

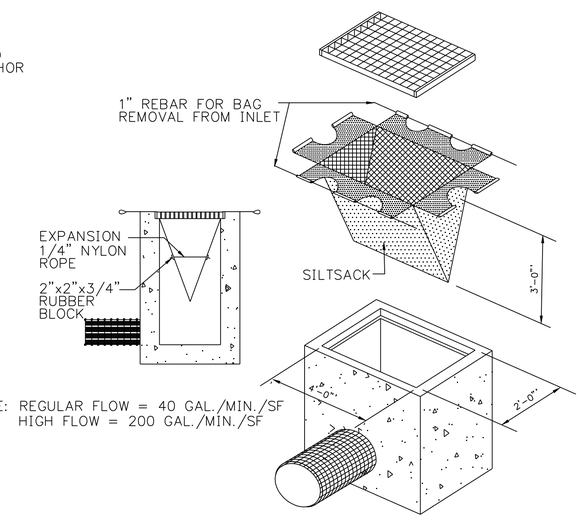

NOTE: REGULAR FLOW = 40 GAL./MIN./SF
HIGH FLOW = 200 GAL./MIN./SF

SILTSACK

DETAIL 9
NTS ~

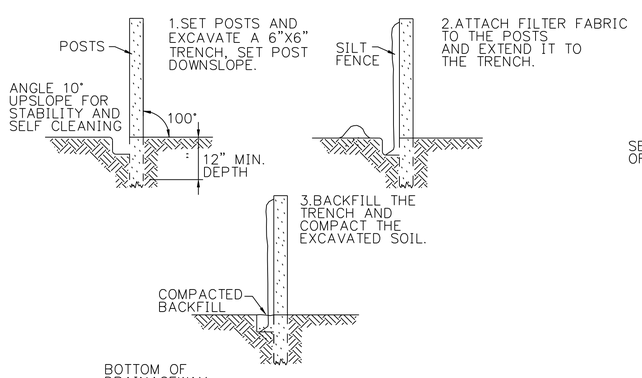

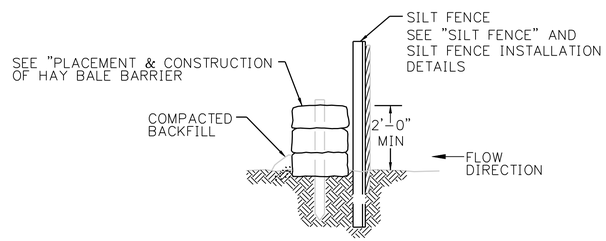

BACKFILL AND COMPACT THE EXCAVATED SOIL AS SHOWN ON THE UPHILL SIDE OF THE BARRIER TO PREVENT PIPING

GEOTEXTILE SILT FENCE BARRIER W/ HAYBALES

DETAIL 7
NTS ~

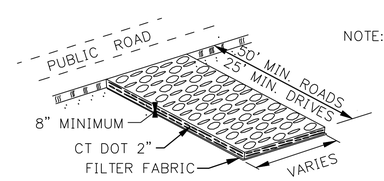

CONSTRUCTION ENTRANCE

DETAIL 8
NTS ~

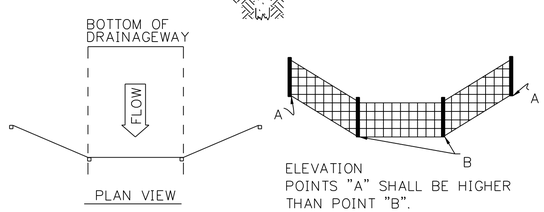

GEOTEXTILE SILT FENCE BARRIER W/OUT HAYBALES

DETAIL 6
NTS ~

DOCKET No. 272

ISSUED FOR CONSTRUCTION

no.	date	revisions	by	chk
1	5/10/07	ISSUED CSC REVISED	CTC	

Burns & McDonnell
SINCE 1898

date 10/11/05
designed BL COMPANIES
detailed BL COMPANIES
checked S. NEWLAND

MF	NO.	DATE	REVISIONS	BY	CHK	APP	APP

NORTHEAST UTILITIES SERVICE CO.

FOR THE CONNECTICUT LIGHT & POWER COMPANY

TITLE MIDDLETOWN-NORWALK 345kV TRANSMISSION PROJECT

EROSION CONTROL DETAILS

BY SEN-BMCD	CHKD	APP	APP
DATE 10-11-05	DATE	DATE	DATE
SCALE AS NOTED	D	DWG. NO. 01223-15003 PG 001	

COPYRIGHT © 2007 BURNS & McDONNELL ENGINEERING COMPANY, INC.

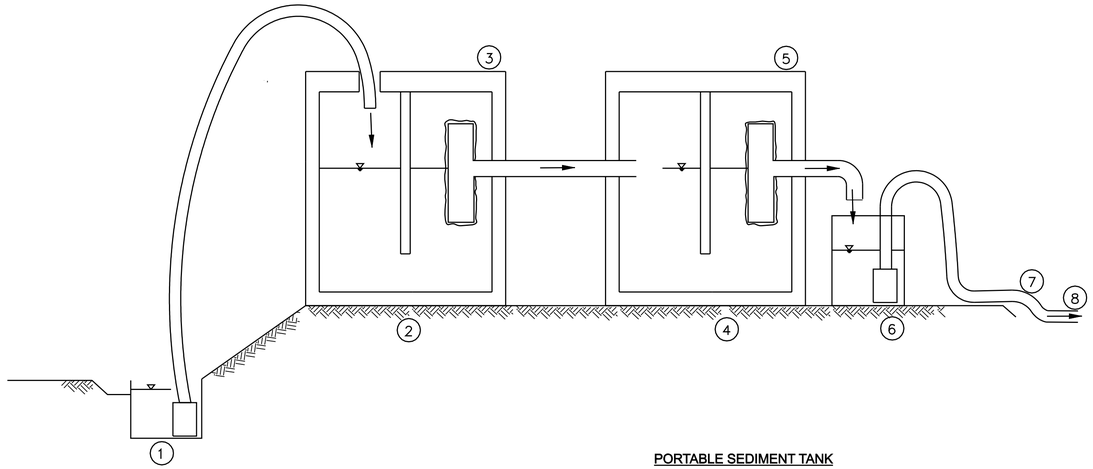

NOTES

1. 20 GPM TRASH PUMP DEWATERS FOUNDATION EXCAVATION
2. MUDDY WATER DISCHARGES TO 1,250 GAL SEPTIC TANK (OR DET. OUTLET STRUCTURE)
3. 4" TEE OUTLET WRAPPED W/ FILTER FABRIC
4. 1,250 GAL CLEAR WELL
5. 2ND 4" TEE OUTLET WRAPPED W/ FILTER FABRIC
6. 2ND PUMP IN 55 GAL DRUM (OR GRAVITY HOSE) DRAINS SYSTEM
7. TEMP. OUTLET TO CATCH BASIN IN STREET
8. 2-1,250 GAL. TANKS = 2,500 GAL. CAPACITY TOTAL

PORTABLE SEDIMENT TANK

DETAIL 1
NTS

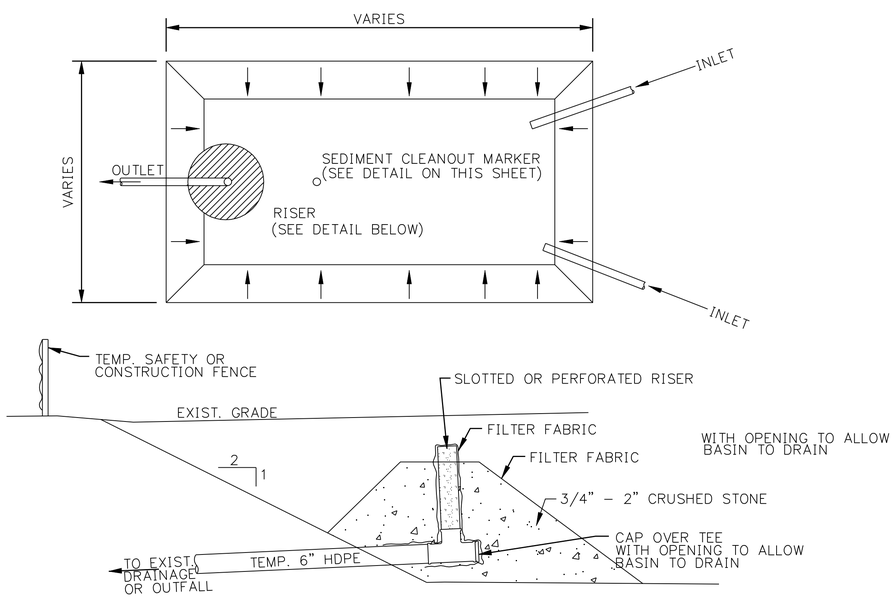

TEMPORARY SEDIMENT TRAP

DETAIL 2
NTS

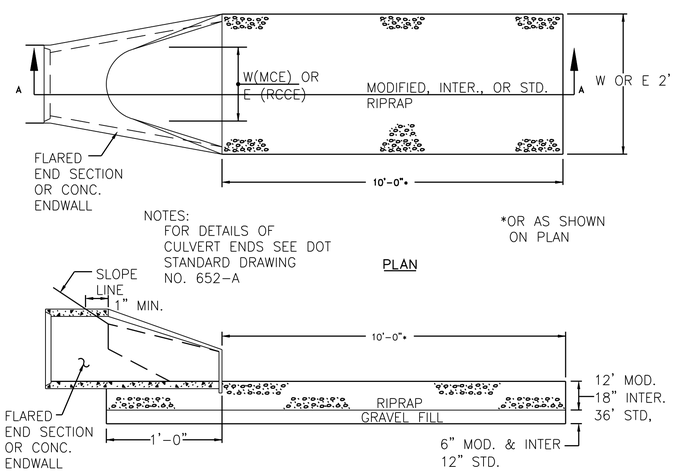

RIPRAP TYPE	"T" (INCHES)
INTERMEDIATE	18
MODIFIED	12
STANDARD	36

SECTION A-A

LEVEL SPREADER

DETAIL 3
NTS

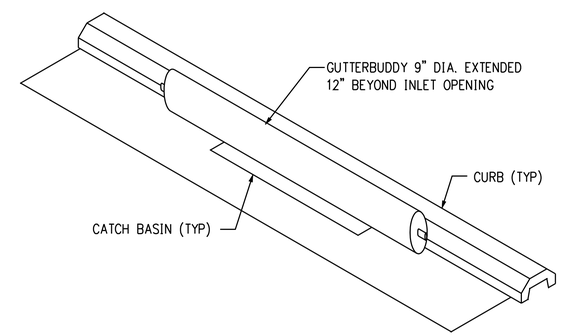

GUTTERBUDDY STORM DRAIN

DETAIL 4
NTS

ISSUED FOR CONSTRUCTION

no.	date	revisions	by	chk
1	5/10/07	ISSUED CSC REVISED	CTC	

Burns & McDonnell
SINCE 1898

date 11/09/05
detailed BL COMPANIES
designed BL COMPANIES
checked S. NEWLAND

MF	NO.	DATE	REVISIONS	BY	CHK	APP	APP

NORTHEAST UTILITIES SERVICE CO.

FOR THE CONNECTICUT LIGHT & POWER COMPANY

TITLE MIDDLETOWN-NORWALK 345kV TRANSMISSION PROJECT

EROSION CONTROL DETAILS

BY SEN-BMCD	CHKD	APP	APP
DATE 11-09-05	DATE	DATE	DATE
SCALE AS NOTED	D	DWG. NO. 01224-15003 PG 002	

COPYRIGHT © 2007 BURNS & McDONNELL ENGINEERING COMPANY, INC.