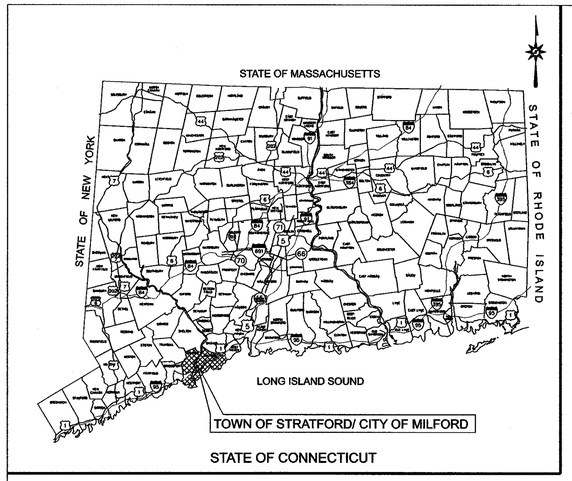

LOCATION MAP

N.T.S.

middletown | norwalk

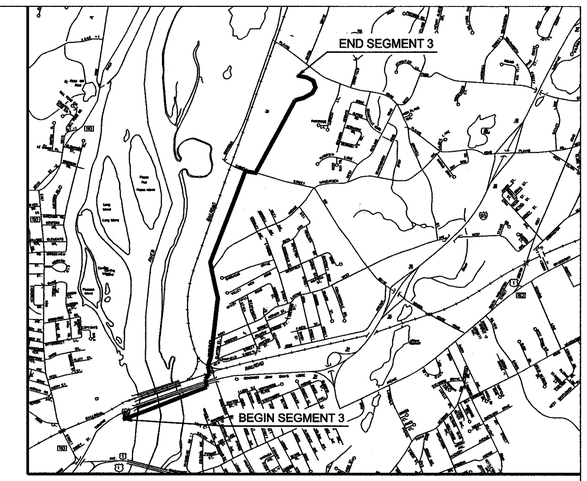

VICINITY MAP

N.T.S.

PLANS FOR THE CONSTRUCTION

OF THE

MIDDLETOWN-NORWALK 345-kV TRANSMISSION LINE PROJECT

SEGMENT 3

TOWN OF STRATFORD / CITY OF MILFORD, CONNECTICUT

CONNECTICUT SITING COUNCIL
DOCKET NO. 272

STATE OF CONNECTICUT
SCOTT E. NEWLAND
No. 24675
LICENSED
PROFESSIONAL ENGINEER

8/29/06

Burns & McDonnell
SINCE 1898

Connecticut Light & Power
The Northeast Utilities System

COPYRIGHT © 2005 BURNS & McDONNELL ENGINEERING COMPANY, INC.

DRAWING INDEX

DRAWING INDEX:

DWG NO	TITLE/DESCRIPTION
01223-00000 PG 001	CONSTRUCTION SET
01223-00001 PG 001	HOUSATONIC RIVER TO EAST DEVON SS PAGE INDEX
01223-00001 PG 002	HOUSATONIC RIVER TO EAST DEVON SS GENERAL NOTES AND LEGEND
01223-10002 PG 001	CITY OF MILFORD INDEX KEY MAP
01223-10002 PG 002	CITY OF MILFORD ROUTE DATA TABLES
01223-10001 PG 003	CITY OF MILFORD P & P Sta 1010+00 TO 1017+25
01223-10001 PG 004	CITY OF MILFORD P & P Sta 1017+25 TO 1023+50
01223-10001 PG 005	CITY OF MILFORD P & P Sta 1021+50 TO 1030+00
01223-10001 PG 006	CITY OF MILFORD P & P Sta 1028+50 TO 1037+50
01223-10001 PG 007	CITY OF MILFORD P & P Sta 1035+50 TO 1044+00
01223-10001 PG 008	CITY OF MILFORD P & P Sta 1043+00 TO 1051+00
01223-10001 PG 009	CITY OF MILFORD P & P Sta 1049+00 TO 1058+00
01223-10001 PG 010	CITY OF MILFORD P & P Sta 1056+00 TO 1065+00
01223-10001 PG 011	CITY OF MILFORD P & P Sta 1063+50 TO 1072+50
01223-10001 PG 012	CITY OF MILFORD P & P Sta 1071+00 TO 1080+00
01223-10001 PG 013	CITY OF MILFORD P & P Sta 1078+50 TO 1086+50
01223-10001 PG 014	CITY OF MILFORD P & P Sta 1085+50 TO 1094+50
01223-10001 PG 015	CITY OF MILFORD P & P Sta 1092+50 TO 1101+50
01223-10001 PG 016	CITY OF MILFORD P & P Sta 1100+00 TO 1108+50
01223-10001 PG 017	CITY OF MILFORD P & P Sta 1107+50 TO 1115+50
01223-10001 PG 018	CITY OF MILFORD P & P Sta 1113+00 TO EAST DEVON SS
01223-45003 PG 001	VAULT, GROUNDING AND HANDHOLE DETAILS
01223-45003 PG 002	VAULT AND GROUNDING DETAILS
01223-45003 PG 003	UTILITY BRIDGE SPLICE VAULT DETAILS
01223-45003 PG 004	HORIZONTAL DIRECTIONAL DRILL SPLICE VAULT DETAILS
01223-45003 PG 005	CROSSING SPLICE VAULT DETAILS
01223-45003 PG 006	CONDUIT TRANSITIONS
01223-46003 PG 001	TYPICAL DUCT BANK DETAILS
01223-46003 PG 002	UTILITY BRIDGE DUCT BANK DETAILS AND UTILITY CROSSING DETAIL
01223-46003 PG 003	UTILITY BRIDGE DUCT BANK DETAILS
01223-46003 PG 004	JACK AND BORE AND HORIZONTAL DIRECTIONAL DRILL DUCT BANK DETAILS
01223-46003 PG 005	CABLE AND TEMPERATURE MONITORING DETAILS
01223-46003 PG 006	HORIZONTAL DIRECTIONAL DRILL AND JACK AND BORE SECTIONS
01223-15003 PG 001	EROSION CONTROL DETAILS
01223-15003 PG 002	EROSION CONTROL DETAILS
LL-01	LANDSCAPE PLAN
SB-01	LOT LINE ADJUSTMENT PLAN
UTL-01	UTILITY PLAN

STATE OF CONNECTICUT
SCOTT E. NEWLAND
No. 24675
LICENSED
PROFESSIONAL ENGINEER
8/29/06

DOCKET No. 272

ISSUED FOR CONSTRUCTION

no.	date	revisions	by	chk
1	8/29/06	ISSUED FOR CONSTRUCTION	CTC	

Burns & McDonnell
SINCE 1898

date 10/11/05
detailed L. ROWSE
designed C. COURTRIGHT
checked S. NEWLAND

MF	NO.	DATE	REVISIONS	BY	CHK	APP	APP

NORTHEAST UTILITIES SERVICE CO.

FOR THE CONNECTICUT LIGHT & POWER COMPANY

TITLE MIDDLETOWN-NORWALK 345kV TRANSMISSION PROJECT

HOUSATONIC RIVER TO EAST DEVON SS
PAGE INDEX

BY SEN-BMCD	CHKD	APP	APP
DATE 10/11/05	DATE	DATE	DATE
SCALE AS NOTED	D	DWG. NO. 01223-00001 PG 001	

COPYRIGHT © 2006 BURNS & McDONNELL ENGINEERING COMPANY, INC.

ABBREVIATIONS

BUILDINGS	
GAR.	GARAGE
GUIDE RAILS	
MBR	METAL BEAM RAIL
CGRM	CABLE GUIDE RAIL METAL POSTS
CGRW	CABLE GUIDE RAIL WOOD POSTS
TGR	TIMBER GUIDE RAIL
FENCES/WALLS	
CLF	CHAIN LINK FENCE
PICK.FENCE	PICKET FENCE
RAIL FENCE	WOOD RAIL FENCE
STOCK.FENCE	STOCKADE FENCE
WIRE FENCE	WIRE FENCE
RET.WALL	RETAINING WALL
MONUMENTATION	
CHD	CONN.HIGHWAY DEPT.MON.
DH	DRILL HOLE
I.PIN	IRON PIN
I.PIPE	IRON PIPE
MAG.NAIL	MAGNETIC NAIL
MON.	MONUMENT
PK NAIL	"PK" NAIL
SPIKE	SPIKE
SURFACE/WALL/CURB MATERIALS	
BIT.	BITUMINOUS
BOL.	BOLLARD
CONC.	CONCRETE
GRAN.	GRANITE
GRAV.	GRAVEL
B.C.I.C.	BITUMINOUS CONCRETE LIP CURB
UTILITY - WATER	
WG	WATER GATE (OR CURB BOX)
WM	WATER METER
TRAFFIC	
LOOP DET.	LOOP DETECTOR
UTILITY - COMMUNICATIONS AND ELECTRIC	
ELEC.MH	ELECTRIC MANHOLE
TEL.MH	TELEPHONE/COMMUNICATIONS MANHOLE
TRANS.	TRANSFORMER
UI	UNITED ILLUMINATING
SNET	SOUTHERN NEW ENGLAND TELEPHONE
CL&P	CONNECTICUT LIGHT AND POWER

UTILITY - GAS	
GG	GAS GATE
ST.	STEEL
PIPE MATERIALS	
CI	CAST IRON
DI	DUCTILE IRON
H.P.	HIGH PRESSURE
L.P.	LOW PRESSURE
PLA	PLASTIC
PVC	POLYVINYL CHLORIDE
RCP	REINFORCED CONCRETE PIPE
CMP	CORRUGATED METAL PIPE
WRP	WRAPPED PIPE
600#	600 PSI
CWD	CREOSOTE WOOD DUCT
MTD	MULTI TILED DUCTS
STD	SINGLE TILED DUCTS
F	FIBERGLASS
P	PLASTIC
I	IRON
W	WOOD
HWF	
TH	TEST HOLE
STRUCTURES	
"C" CB	CURBED CATCH BASIN
"C-L" CB	CURBLESS CATCH BASIN
MH	MANHOLE
SAN.	SANITARY
STM.	STORM
TF	TOP OF FRAME
INV.	INVERT
BTM	BOTTOM
N/A	NOT AVAILABLE
MISC.	
(ABAN.)	ABANDONED
(MAP)	COMPILED FROM EXISTING MAPPING
UG	UNDERGROUND
F.O.	FIBER OPTIC

LEGEND

Edge Of Road
Concrete Pavement
Dirt Road
B.C.I.C.
Curb (Type As Labeled)
Guide Rail
Concrete Median Barrier
Railroad Tracks
Fence
Storm
Sanitary
Gas Main
Water Main
Underground Electric
Telephone Duct Bank
Underground Tele. Conduit
Overhead Wires
Retaining Wall
Highway Line
Street Line
Property Line
Lot Line Of Common Ownership
Town Line
DUCT BANK
Water/RR Crossing
Demolition
Approx. Limits of Thermally Approved Unbound Aggregate Backfill

Easement Line
Edge of Water
Stone Wall
Transmission Tower
Riprap
Hedge Row
Tree Line
Shrub
All Trees
Hand Hole
Pedestrian Signal
Span Pole
Mast Arm
Traffic Controller
Traffic Signal
Sign
2-Post Sign
Double-Faced Sign
Billboard
Utility Pole
Utility Pole With Light
General Purpose Lamp
Light Standard
Guy Wire
Guy Pole
Water Meter
Hydrant
Type "C-L" Catch Basin
Type "C" Catch Basin
Manhole
Benchmark
Control Point
Monuments
Pin, Pipe, Drillhole
Marsh
Wetlands Boundary
Fiber Optic Handhole
Splice Vault
Test Hole
Temperature Monitor Station

GENERAL NOTES

1. THE UTILITIES AND NATURAL FEATURES SHOWN HEREON ARE BASED ON FIELD SURVEYS, AERIAL PHOTOGRAPHY AND RECORD DOCUMENTS. OTHER FACILITIES MAY EXIST NOT DISCOVERED THROUGH THE RECORD CHECK. THE CONTRACTOR SHALL VERIFY THE EXACT LOCATION, BOTH HORIZONTAL AND VERTICAL, OF ALL UTILITIES THROUGH THE APPROPRIATE UTILITY COMPANIES. CALL BEFORE YOU DIG.
2. ALL VERTICAL RADII ARE 400' UNLESS OTHERWISE NOTED.
3. DUCT BANK SHALL MAINTAIN MINIMUM COVER DEPTH OF 2'-6" UNLESS OTHERWISE SHOWN ON DRAWINGS. MAINTAIN 2'-0" VERTICAL CLEARANCE OVER OR UNDER EXISTING UTILITIES UNLESS OTHERWISE SHOWN ON DRAWINGS.
4. ALL AREAS DISTURBED BY CONSTRUCTION SHALL BE RETURNED TO THE ORIGINAL CONDITIONS AS DETERMINED BY NORTHEAST UTILITIES.
5. COORDINATES AND STATIONING INDICATED ARE AT CENTERLINE OF DUCT BANK.
6. SEE INDEX KEY MAPS FOR THE DESIGNATION BETWEEN MUNICIPAL ROADS AND STATE ROADS.
7. TREES AND SHRUBS SHALL BE REMOVED AND REPLACED WITH SIMILAR TYPES AND SIZES TYPICAL OF GENERAL CONSUMER NURSERY STOCK, PROVIDED THAT NO REPLACEMENT TREE SHALL EXCEED TWELVE (12) FEET IN HEIGHT, NOR SHALL ANY REPLACEMENT SHRUB EXCEED A THREE (3) GALLON POT AND PROVIDED THAT NOTHING SHALL BE PLANTED WITHIN FIFTEEN (15) FEET OF AN INSTALLED VAULT OR WITHIN TEN (10) FEET OF AN INSTALLED CABLE DUCT BANK.
8. COORDINATES ARE BASED ON THE CONNECTICUT STATE PLANE COORDINATE SYSTEM. (NAD 83)
9. VERTICAL DATUM IS BASED ON NAVD 88.
10. SILT FENCE SHALL BE USED ALONG THE DOWN SLOPE SIDE OF THE CONSTRUCTION AREA WHERE THERE IS THE POTENTIAL FOR STORM WATER RUNOFF. THIS INCLUDES ANY PERVIOUS AREAS ALONG THE ROUTE. INLET PROTECTION SHALL BE USED IN ROADWAYS WHERE STORM DRAINS ARE PRESENT AND POTENTIAL FOR STORM WATER RUNOFF EXISTS.
11. TEMPORARY AND PERMANENT EASEMENTS SHALL BE ACQUIRED FOR INSTALLATION OF THE DUCT BANK AND VAULTS ALONG PRIVATE PROPERTY. A TYPICAL VAULT LOCATION INSTALLED ALONG PRIVATE PROPERTY REQUIRES A PERMANENT EASEMENT OF APPROXIMATELY 10,000 SF AND A TEMPORARY EASEMENT OF APPROXIMATELY 6,500 SF.
12. VAULT AND DUCT BANK LOCATIONS ARE SUBJECT TO ADJUSTMENT DUE TO UNFORESEEN CONDITIONS.
13. NORTHING AND EASTING DESIGNATIONS FOR SPLICE VAULT LOCATIONS ARE REFERENCED TO CENTER OF SPLICE VAULT.

ONE CALL SYSTEMS
1-800-922-4455
CALL BEFORE YOU DIG.....IT'S THE LAW!
48 HOUR NOTICE REQUIRED

DOCKET No. 272

STATE OF CONNECTICUT
SCOTT E. NEWLAND
No. 24675
LICENSED PROFESSIONAL ENGINEER
8/29/06

ISSUED FOR CONSTRUCTION

no.	date	revisions	by	chk
1	8/29/06	ISSUED FOR CONSTRUCTION	CTC	

Burns & McDonnell
SINCE 1898

date 10/11/05	detailed L. ROWSE
designed C. COURTRIGHT	checked S. NEWLAND

MF	NO.	DATE	REVISIONS	BY	CHK	APP	APP

NORTHEAST UTILITIES SERVICE CO.

FOR THE CONNECTICUT LIGHT & POWER COMPANY

TITLE MIDDLETOWN-NORWALK 345kV TRANSMISSION PROJECT

HOUSATONIC RIVER TO EAST DEVON SS
GENERAL NOTES AND LEGEND

BY SEN-BMCD	CHKD	APP	APP
DATE 10/11/05	DATE	DATE	DATE
SCALE AS NOTED	D	DWG. NO. 01223-00001 PG 002	

COPYRIGHT © 2006 BURNS & McDONNELL ENGINEERING COMPANY, INC.

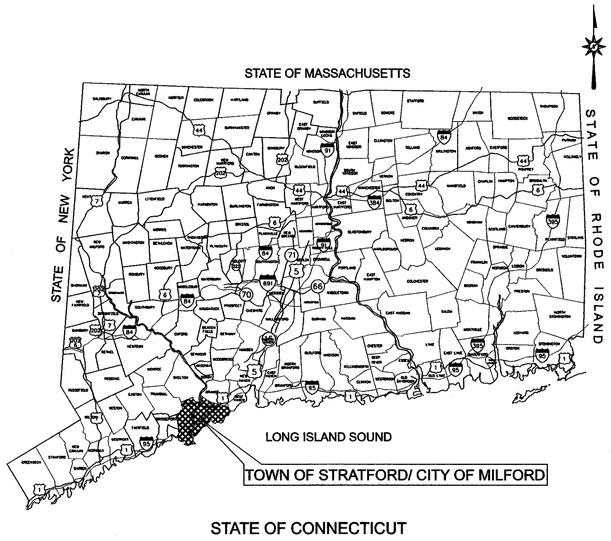

LOCATION MAP

N.T.S.

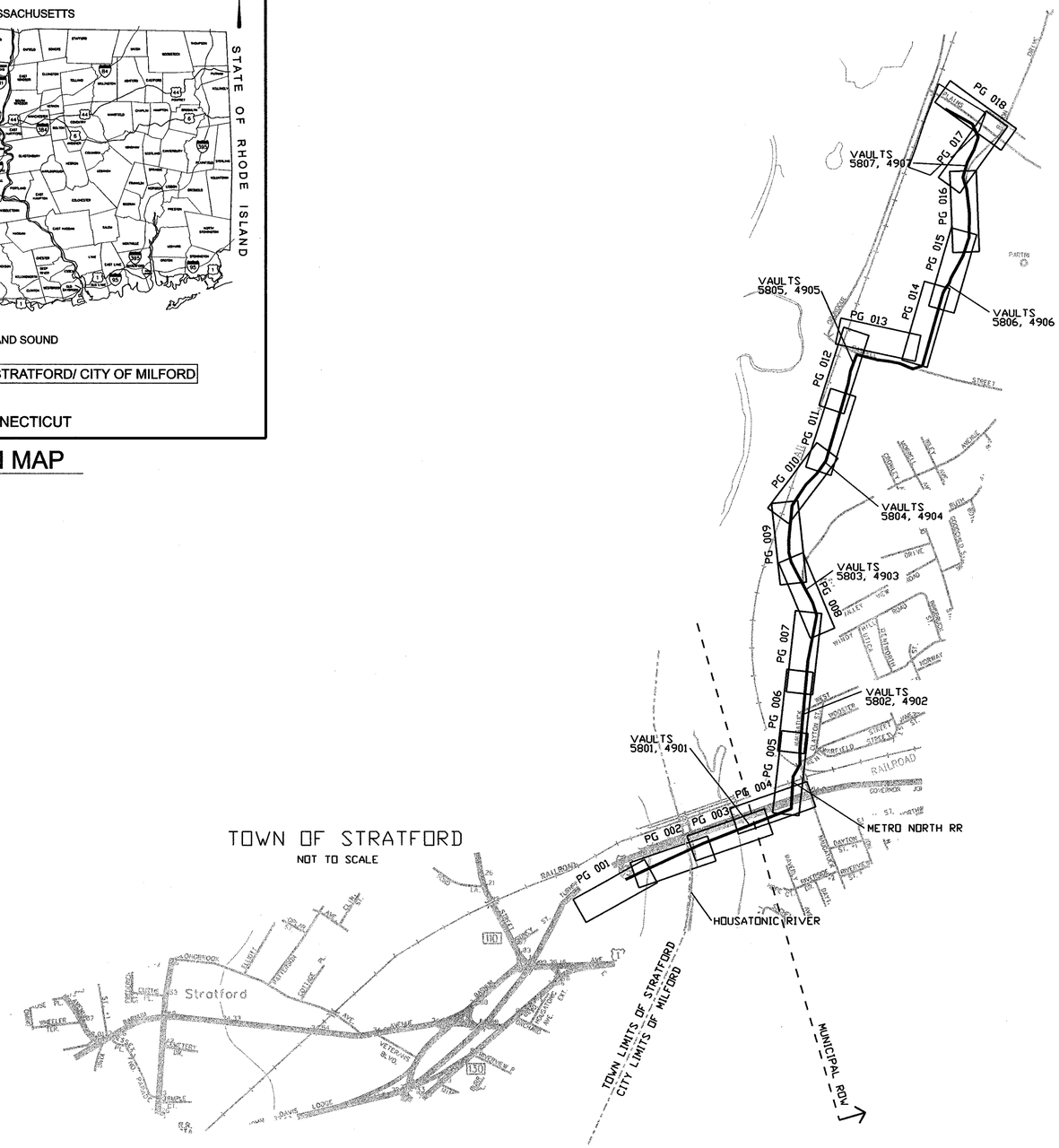

STATE OF CONNECTICUT
SCOTT E. NEWLAND
No. 24675
LICENSED
PROFESSIONAL ENGINEER
8/29/06

DOCKET No. 272

NORTH

ISSUED FOR CONSTRUCTION

no.	date	revisions	by	chk
1	8/29/06	ISSUED FOR CONSTRUCTION	CTC	

Burns & McDonnell
SINCE 1898

date 10/11/05
detailed L. ROWSE
designed C. COURTRIGHT
checked S. NEWLAND

MF	NO.	DATE	REVISIONS	BY	CHK	APP	APP

NORTHEAST UTILITIES SERVICE CO.

FOR THE CONNECTICUT LIGHT & POWER COMPANY

TITLE MIDDLETOWN–NORWALK 345kV TRANSMISSION PROJECT

CITY OF MILFORD
INDEX KEY MAP

BY SEN-BMCD	CHKD	APP	APP
DATE 10/11/05	DATE	DATE	DATE
SCALE AS NOTED	D	DWG. NO. 01223–10002 PG 001	

COPYRIGHT © 2006 BURNS & McDONNELL ENGINEERING COMPANY, INC.

CURVE DATA TABLE

CURVE NO.	RADIUS	CURVE LENGTH	TANGENT LENGTH	DEFLECTION ANGLE	POINT OF INTERSECTION	POINT OF CURVATURE	POINT OF TANGENCY	SHEET REFERENCE
PI-M-01	200'	71.75'	36.27'	20°33'18.22"	N 635,677.4090 E 901,708.9843	N 635,664.5835 E 901,675.0628	N 635,701.3281 E 901,736.2430	10001 PG 003
PI-M-02	200'	80.81'	40.96'	23°08'58.23"	N 635,728.3452 E 901,767.0324	N 635,701.3281 E 901,736.2430	N 635,741.0827 E 901,805.9639	10001 PG 003
PI-M-03	52'	79.98'	50.33'	88°07'47.64"	N 635,908.4232 E 902,317.4329	N 635,892.7728 E 902,269.5982	N 635,956.7432 E 902,303.3519	10001 PG 004
PI-M-04	400'	76.65'	38.44'	10°58'47.65"	N 636,001.0301 E 902,290.4462	N 635,964.1206 E 902,301.2020	N 636,039.3126 E 902,286.9171	10001 PG 004
PI-M-05	200'	121.17'	62.51'	34°42'49.35"	N 636,294.1257 E 902,263.4274	N 636,231.8788 E 902,269.1656	N 636,348.5609 E 902,294.1588	10001 PG 005
PI-M-06	200'	71.27'	36.02'	20°25'00.67"	N 636,382.6343 E 902,313.3949	N 646,351.2711 E 902,295.6888	N 636,418.2040 E 902,319.0477	10001 PG 005
PI-M-07	100'	38.52'	19.50'	22°04'19.74"	N 636,548.1850 E 902,339.7044	N 636,528.9234 E 902,336.6433	N 636,567.1853 E 902,335.3031	10001 PG 005
PI-M-08	200'	99.91'	51.02'	28°37'21.25"	N 636,651.7386 E 902,315.7169	N 636,602.0334 E 902,327.2308	N 636,700.8851 E 902,329.4207	10001 PG 005
PI-M-09	200'	44.11'	22.14'	12°38'11.64"	N 636,722.2162 E 902,335.3686	N 636,700.8851 E 902,329.4207	N 636,744.3317 E 902,336.5059	10001 PG 006
PI-M-10	200'	15.24'	7.62'	4°21'54.89"	N 636,751.9442 E 902,366.8974	N 636,744.3317 E 902,336.5059	N 636,759.5047 E 902,337.8671	10001 PG 006
PI-M-11	200'	46.62'	23.42'	13°21'23.20"	N 636,902.0677 E 902,356.1528	N 636,878.8404 E 902,353.1736	N 636,923.9784 E 902,364.4172	10001 PG 006
PI-M-12	200'	44.56'	22.37'	12°45'59.07"	N 636,944.9130 E 902,372.3133	N 636,923.9784 E 902,364.4172	N 636,967.0750 E 902,375.3882	10001 PG 006
PI-M-13	200'	41.99'	21.07'	12°01'44.25"	N 637,042.7258 E 902,385.8844	N 637,021.8538 E 902,382.9885	N 637,063.7430 E 902,384.3669	10001 PG 006
PI-M-14	202'	45.43'	22.81'	12°53'04.58"	N 637,086.4928 E 902,382.7243	N 637,063.7430 E 902,384.3669	N 637,109.0360 E 902,386.1959	10001 PG 006
PI-M-15	500'	3.21'	1.60'	0°22'03.21"	N 637,121.8317 E 902,388.1665	N 637,120.2466 E 902,387.9224	N 637,123.4152 E 902,388.4207	10001 PG 006
PI-M-16	500'	19.81'	9.91'	2°16'13.22"	N 637,275.2411 E 902,412.8000	N 637,265.4588 E 902,411.2292	N 637,285.0778 E 902,413.9820	10001 PG 006
PI-M-17	200'	39.31'	19.72'	11°15'42.51"	N 637,482.6067 E 902,437.7177	N 637,463.0284 E 902,435.3651	N 637,501.3485 E 902,443.8485	10001 PG 007
PI-M-18	200'	42.56'	21.36'	12°11'32.42"	N 637,521.6502 E 902,450.4895	N 637,501.3485 E 902,443.8485	N 637,542.8966 E 902,452.6932	10001 PG 007
PI-M-19	1,000'	178.45'	89.46'	10°13'27.63"	N 637,713.5127 E 902,469.5507	N 637,624.4463 E 902,461.1514	N 637,799.6738 E 902,493.6262	10001 PG 007
PI-M-20	350'	240.98'	125.49'	39°26'57.87"	N 638,212.0951 E 902,604.9939	N 638,090.9462 E 902,572.2796	N 638,326.4311 E 902,553.2779	10001 PG 008
PI-M-21	400'	12.48'	6.24'	1°47'17.92"	N 638,412.2013 E 902,514.4826	N 638,406.5132 E 902,517.0554	N 638,417.9669 E 902,512.0885	10001 PG 008
PI-M-22	202'	45.15'	22.67'	12°48'23.20"	N 638,456.3535 E 902,496.1492	N 638,435.4172 E 902,504.8426	N 638,478.6960 E 902,492.3128	10001 PG 008
PI-M-23	200'	44.70'	22.45'	12°48'23.20"	N 638,500.8172 E 902,488.5144	N 638,478.6960 E 902,492.3128	N 638,521.5462 E 902,479.9071	10001 PG 008
PI-M-24	500'	99.32'	49.83'	11°22'54.32"	N 638,721.6334 E 902,396.8248	N 638,675.6165 E 902,415.9324	N 638,762.9745 E 902,369.0117	10001 PG 009
PI-M-25	500'	280.90'	144.26'	32°11'17.58"	N 638,882.6695 E 902,288.4846	N 638,762.9745 E 902,369.0117	N 639,026.8647 E 902,284.0961	10001 PG 009
PI-M-26	500'	65.50'	32.80'	7°30'21.17"	N 639,075.2774 E 902,282.6226	N 639,042.4952 E 902,283.6203	N 639,107.9091 E 902,285.9157	10001 PG 009
PI-M-27	300'	135.77'	69.07'	25°55'50.19"	N 639,523.9008 E 902,327.8965	N 639,455.1809 E 902,320.9615	N 639,582.6698 E 902,364.1834	10001 PG 010
PI-M-28	700'	113.80'	57.03'	9°18'53.87"	N 639,744.6902 E 902,464.2229	N 639,696.1670 E 902,434.2623	N 639,787.7241 E 902,501.6425	10001 PG 010
PI-M-29	200'	49.36'	24.80'	14°08'23.20"	N 639,843.0998 E 902,549.7938	N 639,824.3819 E 902,533.5178	N 639,857.2746 E 902,570.1492	10001 PG 010
PI-M-30	200'	49.28'	24.77'	14°07'07.82"	N 639,871.4282 E 902,590.4741	N 639,857.2746 E 902,570.1492	N 639,890.1121 E 902,606.7325	10001 PG 010
PI-M-31	200'	49.47'	24.86'	14°10'18.78"	N 639,948.2071 E 902,657.2856	N 639,929.4522 E 902,640.9655	N 639,970.3869 E 902,668.5173	10001 PG 010
PI-M-31A	200'	49.40'	24.82'	14°09'03.41"	N 639,992.5336 E 902,679.7322	N 639,970.3869 E 902,668.5173	N 640,011.2664 E 902,696.0211	10001 PG 010
PI-M-31B	200'	78.80'	39.92'	22°34'24.88"	N 640,075.8883 E 902,752.2123	N 640,045.7671 E 902,726.0207	N 640,113.7560 E 902,764.8346	10001 PG 011
PI-M-32	2,000'	96.37'	48.19'	2°45'38.48"	N 640,299.2723 E 902,826.6722	N 640,253.5529 E 902,811.4327	N 640,344.2047 E 902,844.0961	10001 PG 011
PI-M-33	400'	147.97'	74.84'	21°11'43.14"	N 640,879.6828 E 903,051.7440	N 640,809.9045 E 903,024.6854	N 640,954.5238 E 903,051.7440	10001 PG 012
PI-M-34	1,000'	195.54'	98.08'	11°12'12.27"	N 640,094.7860 E 903,051.7440	N 640,996.7051 E 903,051.7440	N 641,190.9978 E 903,070.8004	10001 PG 012
PI-M-35	200'	44.78'	22.48'	12°49'43.04"	N 641,298.6303 E 903,092.1189	N 641,276.5746 E 903,087.7504	N 641,321.1054 E 903,091.4812	10001 PG 012

CURVE DATA TABLE

CURVE NO.	RADIUS	CURVE LENGTH	TANGENT LENGTH	DEFLECTION ANGLE	POINT OF INTERSECTION	POINT OF CURVATURE	POINT OF TANGENCY	SHEET REFERENCE
PI-M-36	200'	44.78'	22.48'	12°49'43.04"	N 641,343.5806 E 903,090.8435	N 641,321.1054 E 903,091.4812	N 641,365.6363 E 903,095.2120	10001 PG 012
PI-M-37	100'	172.32'	116.53'	98°43'54.79"	N 641,542.1464 E 903,130.1729	N 641,427.8353 E 903,107.5316	N 641,502.4139 E 903,239.7218	10001 PG 013
PI-M-38	500'	74.62'	37.38'	8°33'01.97"	N 641,452.2105 E 903,378.1408	N 641,464.9549 E 903,343.0024	N 641,444.8321 E 903,414.7835	10001 PG 013
PI-M-39	125'	186.58'	115.59'	85°31'17.97"	N 641,344.5559 E 903,912.7824	N 641,367.3735 E 903,799.4642	N 641,455.7465 E 903,944.3784	10001 PG 014
PI-M-40	202'	81.97'	41.56'	23°14'59.93"	N 642,027.2258 E 904,106.7706	N 641,987.2519 E 904,095.4116	N 642,059.4695 E 904,132.9866	10001 PG 015
PI-M-41	200'	35.25'	17.67'	10°05'52.50"	N 642,073.1797 E 904,144.1338	N 642,059.4695 E 904,132.9866	N 642,088.6319 E 904,152.7044	10001 PG 015
PI-M-42	100'	25.81'	12.98'	14°47'08.22"	N 642,145.1202 E 904,184.0359	N 642,133.7737 E 904,177.7426	N 642,157.6971 E 904,187.2253	10001 PG 015
PI-M-43	202'	52.13'	26.21'	14°47'08.22"	N 642,183.1024 E 904,193.6678	N 642,157.6971 E 904,187.2253	N 642,206.0223 E 904,206.3804	10001 PG 015
PI-M-44	200'	41.62'	20.88'	11°55'20.57"	N 642,444.3913 E 904,338.5929	N 642,426.1286 E 904,328.4634	N 642,464.3528 E 904,344.7311	10001 PG 015
PI-M-45	200'	61.02'	30.75'	17°28'49.83"	N 642,667.7748 E 904,407.2838	N 642,638.3848 E 904,398.2463	N 642,698.5222 E 904,407.0757	10001 PG 016
PI-M-46	200'	20.41'	10.22'	5°50'52.23"	N 642,934.4273 E 904,405.4792	N 642,924.2122 E 904,405.5484	N 642,944.5821 E 904,404.3697	10001 PG 016
PI-M-47	400'	122.20'	61.58'	17°30'14.69"	N 643,257.7330 E 904,370.1538	N 643,196.5169 E 904,376.8425	N 643,314.1028 E 904,345.3627	10001 PG 016
PI-M-48	150'	105.87'	55.25'	40°26'19.11"	N 643,364.6748 E 904,323.1214	N 643,314.1028 E 904,345.3627	N 643,417.5916 E 904,338.9962	10001 PG 017
PI-M-49	100'	13.76'	6.89'	7°53'04.11"	N 643,451.6946 E 904,349.2269	N 643,445.0938 E 904,347.2467	N 643,457.9613 E 904,352.0938	10001 PG 017
PI-M-50	102'	14.04'	7.03'	7°53'04.11"	N 643,464.3533 E 904,355.0181	N 643,457.9613 E 904,352.0938	N 643,471.0861 E 904,357.0379	10001 PG 017
PI-M-51	75'	37.84'	19.33'	28°54'33.67"	N 643,538.1015 E 904,377.1422	N 643,519.5838 E 904,371.5870	N 643,551.6261 E 904,390.9571	10001 PG 017
PI-M-52	225'	451.43'	352.88'	114°57'23.35"	N 643,930.0862 E 904,777.5403	N 643,683.2233 E 904,525.3788	N 644,054.5442 E 904,447.3329	10001 PG 018

VAULT CURVE DATA TABLE

CURVE NO.	RADIUS	CURVE LENGTH	TANGENT LENGTH	DEFLECTION ANGLE	POINT OF INTERSECTION	POINT OF CURVATURE	POINT OF TANGENCY	SHEET REFERENCE
PI-M4901-1	200'	85.86'	43.60'	24° 35' 54.51"	N 635,656.8363 E 901,707.7124	N 635,640.2930 E 901,667.3683	N 635,688.6718 E 901,737.5090	10001 PG 003
PI-M4901-2	150'	75.34'	38.48'	28° 46' 40.41"	N 635,716.7679 E 901,763.8057	N 635,688.6718 E 901,737.5090	N 635,728.7343 E 901,800.3805	10001 PG 003
PI-M4901-3	200'	44.82'	22.50'	12° 50' 18.80"	N 635,752.2751 E 901,872.3319	N 635,745.2781 E 901,850.9457	N 635,763.8494 E 901,891.6287	10001 PG 003
PI-M4901-4	200'	44.82'	22.50'	12° 50' 18.80"	N 635,775.4236 E 901,910.9255	N 635,763.8494 E 901,891.6287	N 635,782.4207 E 901,932.3116	10001 PG 003
PI-M5802-1	400'	32.74'	16.38'	4° 41' 24.34"	N 637,047.8475 E 902,376.4993	N 637,031.6223 E 902,374.2481	N 637,063.8344 E 902,380.0696	10001 PG 006
PI-M5802-2	202'	29.59'	14.82'	8° 23' 29.60"	N 637,078.2971 E 902,383.2995	N 637,063.8344 E 902,380.0696	N 637,093.0763 E 902,384.3843	10001 PG 006
PI-M5803-1	200'	44.70'	22.44'	12° 48' 20.75"	N 638,558.8738 E 902,453.5797	N 638,538.1459 E 902,462.1866	N 638,580.9938 E 902,449.7812	10001 PG 008
PI-M5803-2	202'	45.16'	22.67'	12° 48' 33.09"	N 638,603.3411 E 902,445.9437	N 638,580.9938 E 902,449.7812	N 638,624.2814 E 902,437.2472	10001 PG 008
PI-M4905-1	100'	172.32'	116.53'	98° 43' 54.79"	N 641,538.7022 E 903,139.6692	N 641,424.3911 E 903,117.0280	N 641,498.9696 E 903,249.2182	10001 PG 013
PI-M5806-1	303'	74.31'	37.34'	14° 03' 29.86"	N 642,023.3313 E 904,105.0500	N 641,987.2517 E 904,095.4116	N 642,055.9891 E 904,123.1637	10001 PG 015
PI-M4907-1	150'	102.46'	53.32'	39° 08' 10.70"	N 643,355.0216 E 904,328.5777	N 643,305.7393 E 904,348.9280	N 643,406.0917 E 904,343.8985	10001 PG 017
PI-M4907-2	102'	14.04'	7.03'	7° 53' 04.16"	N 643,463.2952 E 904,361.0592	N 643,456.5624 E 904,359.0394	N 643,469.6872 E 904,363.9835	10001 PG 017
PI-M4907-3	100'	13.76'	6.89'	7° 53' 04.14"	N 643,475.9540 E 904,366.8505	N 643,469.6872 E 904,363.9835	N 643,482.5547 E 904,368.8306	10001 PG 017
PI-M4907-4	200'	100.91'	51.55'	28° 54' 33.69"	N 643,549.6782 E 904,388.9673	N 643,500.2976 E 904,374.1534	N 643,585.7438 E 904,425.8071	10001 PG 017

VAULT LOCATION TABLE

VAULT #	CENTER OF VAULT
5801	N 635,756.3020 E 901,855.6968
4901	N 635,737.5042 E 901,823.9693
5802	N 636,961.6790 E 902,365.5533
4902	N 636,996.2379 E 902,378.4249
5803	N 638,513.6731 E 902,473.4312
4903	N 638,549.9886 E 902,467.0141
5804	N 639,936.8339 E 902,632.6243
4904	N 639,907.8191 E 902,626.1050
5805	N 641,409.4963 E 903,104.9092
4905	N 641,373.4577 E 903,105.9297
5806	N 642,084.6170 E 904,140.1859
4906	N 642,112.2183 E 904,164.6432
5807	N 643,492.0157 E 904,364.3607
4907	N 643,431.9462 E 904,350.6107

HANDHOLE LOCATION TABLE

HANDHOLE #	CENTER OF HANDHOLE
5801	N 635,767.4374 E 901,872.0446
4901	N 635,738.1850 E 901,843.7376
5802	N 636,980.8696 E 902,362.6661
4902	N 637,014.1049 E 902,386.4153
5803	N 638,513.2644 E 902,456.9207
4903	N 638,569.6452 E 902,464.8074
5804	N 639,954.8040 E 902,640.8803
4904	N 639,889.8581 E 902,617.8386
5805	N 641,428.8359 E 903,103.1337
4905	N 641,354.1181 E 903,107.7053
5806	N 642,070.6694 E 904,126.1604
4906	N 642,126.1659 E 904,178.6687
5807	N 643,475.3974 E 904,353.6332
4907	N 643,412.1672 E 904,350.4192

STATE OF CONNECTICUT
SCOTT E. NEWLAND
No. 24675
LICENSED
PROFESSIONAL ENGINEER
8/29/06

ISSUED FOR CONSTRUCTION

no.	date	revisions	by	chk
1	8/29/06	ISSUED FOR CONSTRUCTION	CTC	

Burns & McDonnell
SINCE 1898

date 06/19/06
designed C. COURTRIGHT
detailed L. ROWSE
checked S. NEWLAND

MF	NO.	DATE	REVISIONS	BY	CHK	APP	APP

NORTHEAST UTILITIES SERVICE CO.

FOR THE CONNECTICUT LIGHT & POWER COMPANY

TITLE MIDDLETOWN–NORWALK 345kV TRANSMISSION PROJECT

CITY OF MILFORD ROUTE
DATA TABLES

BY SEN-BMCD	CHKD	APP	APP
DATE 06-19-06	DATE	DATE	DATE
SCALE AS NOTED	D	DWG. NO. 01223-10002 PG 002	

COPYRIGHT © 2006 BURNS & McDONNELL ENGINEERING COMPANY, INC.

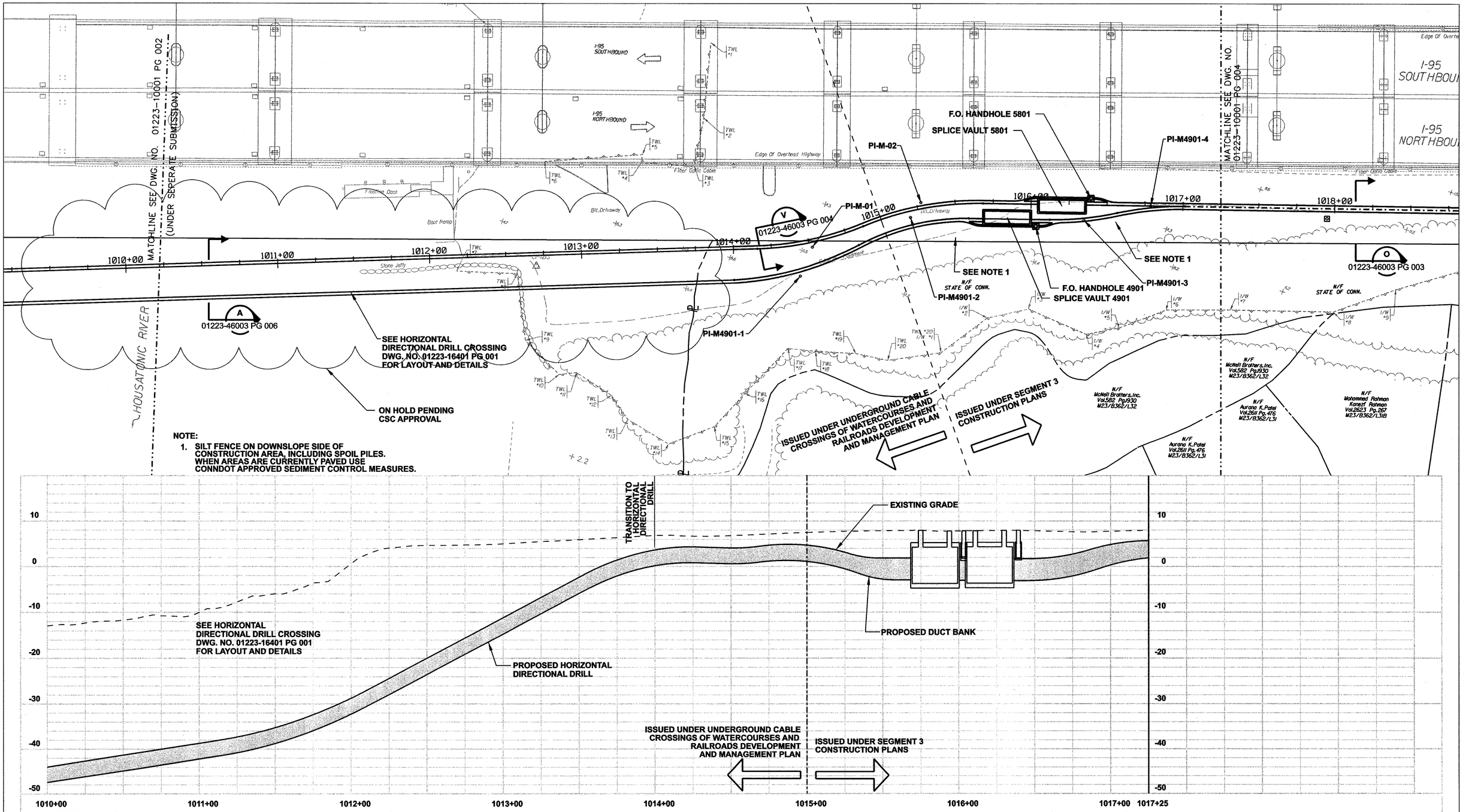

NOTE:

1. SILT FENCE ON DOWNSLOPE SIDE OF CONSTRUCTION AREA, INCLUDING SPOIL PILES. WHEN AREAS ARE CURRENTLY PAVED USE CONNDOT APPROVED SEDIMENT CONTROL MEASURES.

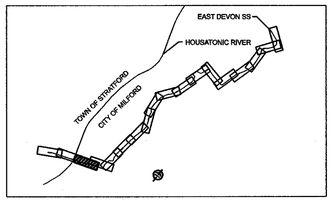

STATE OF CONNECTICUT SCOTT E. NEWLAND No. 24875 LICENSED PROFESSIONAL ENGINEER
8/29/06

NORTH

0 30' 60'
HORIZONTAL SCALE IN FEET
0 10' 20'
VERTICAL SCALE IN FEET

DOCKET No. 272

ISSUED FOR CONSTRUCTION

no.	date	revisions	by	chk
1	8/29/06	ISSUED FOR CONSTRUCTION	CTC	

Burns & McDonnell SINCE 1898

date	detailed
10/11/05	L. ROWSE
designed	checked
C. COURTRIGHT	S. NEWLAND

MF	NO.	DATE	REVISIONS	BY	CHK	APP	APP

NORTHEAST UTILITIES SERVICE CO.

FOR THE CONNECTICUT LIGHT & POWER COMPANY

TITLE MIDDLETOWN-NORWALK 345kV TRANSMISSION PROJECT

CITY OF MILFORD
PLAN AND PROFILE Sta. 1010+00 to 1017+25

BY SEN-BMCD	CHKD	APP	APP
DATE 10-11-05	DATE	DATE	DATE
SCALE AS NOTED	D	DWG. NO. 01223-10001 PG 003	

COPYRIGHT © 2006 BURNS & McDONNELL ENGINEERING COMPANY, INC.

NOTE:

1. SILT FENCE ON DOWNSLOPE SIDE OF CONSTRUCTION AREA, INCLUDING SPOIL PILES. WHEN AREAS ARE CURRENTLY PAVED USE CONNDOT APPROVED SEDIMENT CONTROL MEASURES.

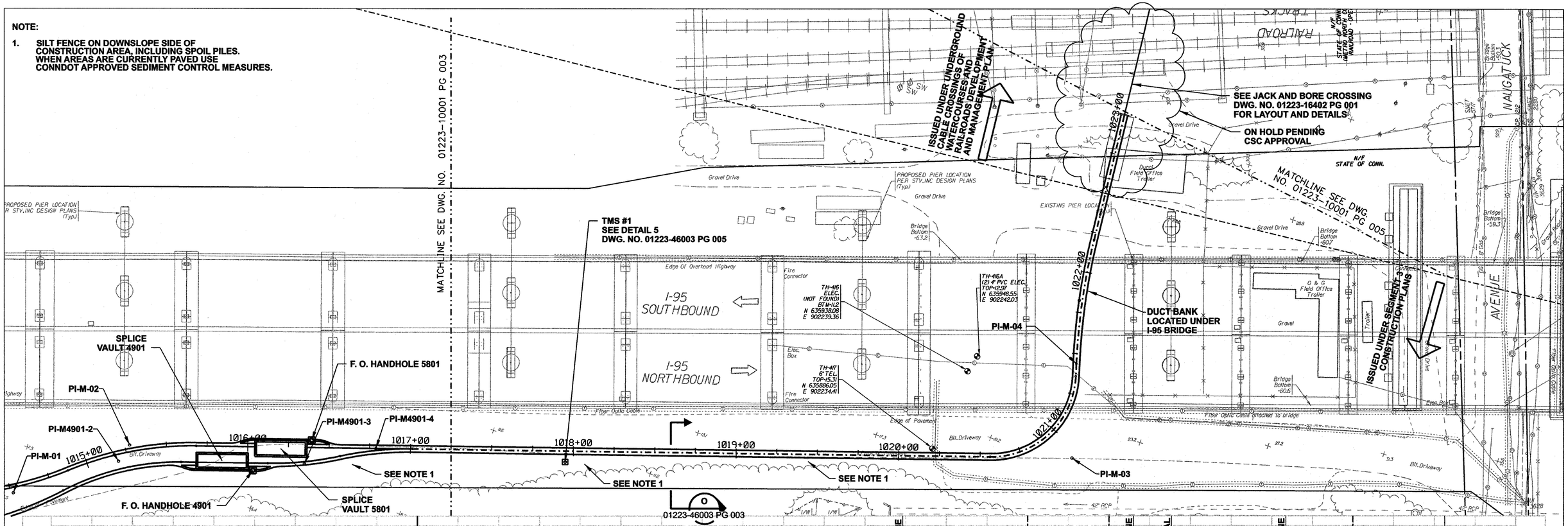

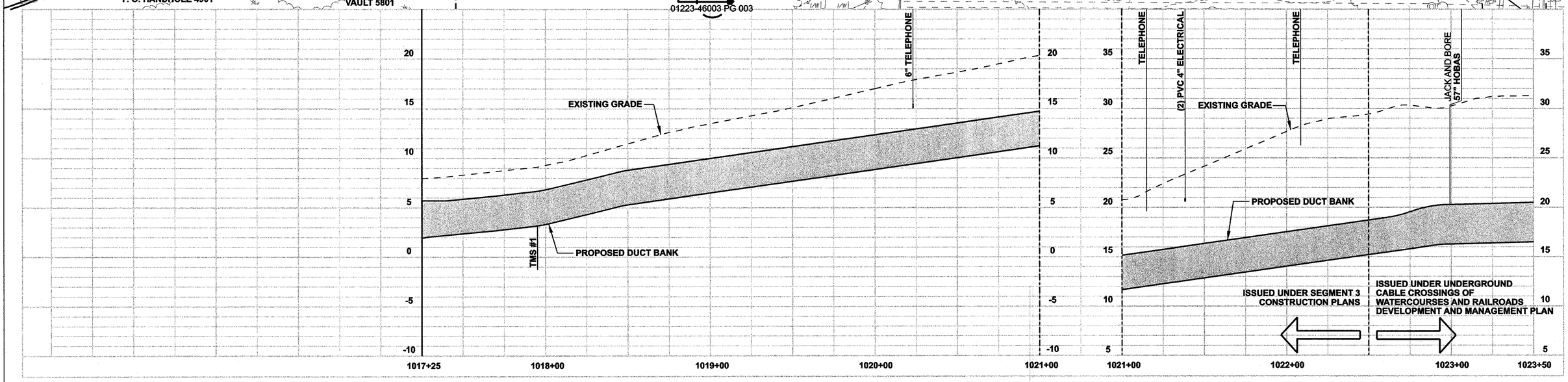

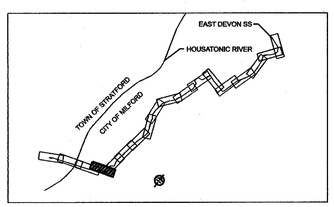

STATE OF CONNECTICUT SCOTT E. NEWLAND No. 24675 LICENSED PROFESSIONAL ENGINEER 8/29/06

NORTH

0 30' 60' HORIZONTAL SCALE IN FEET

0 5' 10' VERTICAL SCALE IN FEET

DOCKET No. 272

ISSUED FOR CONSTRUCTION

no.	date	revisions	by	chk
1	8/29/06	ISSUED FOR CONSTRUCTION	CTC	

Burns & McDonnell SINCE 1898

date 10/11/05 | detailed L. ROWSE

designed C. COURTRIGHT | checked S. NEWLAND

MF	NO.	DATE	REVISIONS	BY	CHK	APP	APP

NORTHEAST UTILITIES SERVICE CO.

FOR THE CONNECTICUT LIGHT & POWER COMPANY

TITLE MIDDLETOWN–NORWALK 345kV TRANSMISSION PROJECT

CITY OF MILFORD
PLAN AND PROFILE Sta. 1017+25 to 1023+50

BY SEN-BMCD	CHKD	APP	APP
DATE 10-11-05	DATE	DATE	DATE
SCALE AS NOTED	D	DWG. NO. 01223–10001 PG 004	

COPYRIGHT © 2006 BURNS & McDONNELL ENGINEERING COMPANY, INC.

NOTE:

1. TREES AND SHRUBBERY SHALL BE REMOVED

ISSUED UNDER UNDERGROUND CABLE CROSSINGS OF WATERCOURSES AND RAILROADS DEVELOPMENT AND MANAGEMENT PLAN

ISSUED UNDER SEGMENT 3 CONSTRUCTION PLANS

SEE JACK AND BORE CROSSING DWG. NO. 01223-16402 PG 001 FOR LAYOUT AND DETAILS ISSUED UNDER UNDERGROUND CABLE CROSSINGS OF WATERCOURSES AND RAILROADS DEVELOPMENT AND MANAGEMENT PLAN

SEE UTILITY BRIDGE CROSSING DWG. NO. 01223-16301 PG 001 THROUGH 01223-16301 PG 011 FOR LAYOUT AND DETAILS ISSUED UNDER UNDERGROUND CABLE CROSSINGS OF WATERCOURSES AND RAILROAD DEVELOPMENT AND MANAGEMENT PLAN

ON HOLD PENDING CSC APPROVAL

SEE NOTE 1

PI-M-03 PI-M-04 PI-M-05 PI-M-06 PI-M-07 PI-M-08 PI-M-09 PI-M-10

01223-46003 PG 006 01223-46003 PG 003 01223-46003 PG 003

MATCHLINE SEE DWG. NO. 01223-10001 PG 004

MATCHLINE SEE DWG. NO. 01223-10001 PG 006

RAILROAD TRACKS

NAUGATUCK AVENUE

KENT STREET

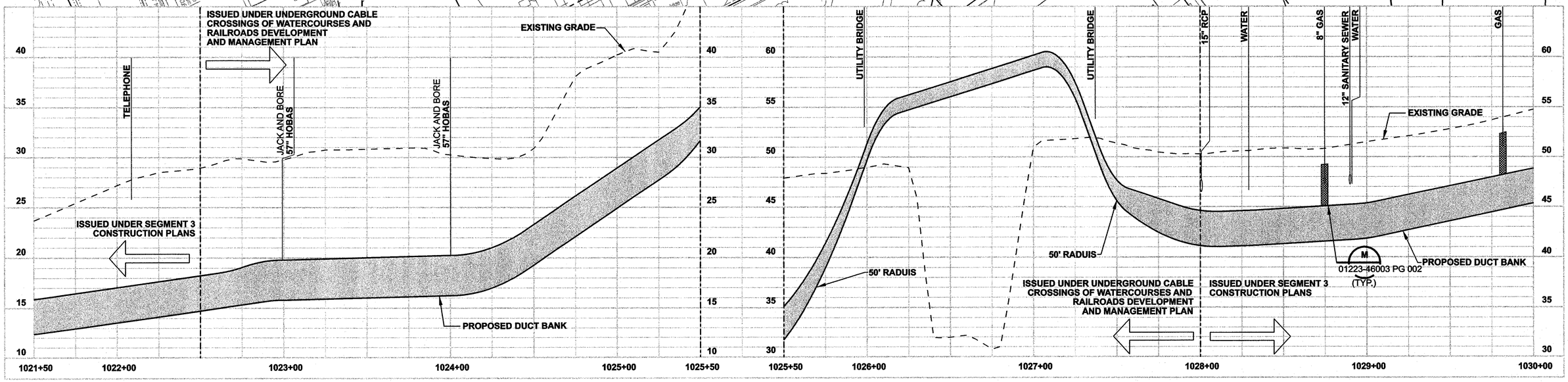

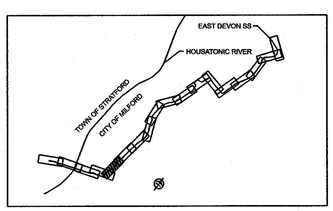

STATE OF CONNECTICUT SCOTT E. NEWLAND No. 24675 LICENSED PROFESSIONAL ENGINEER 8/29/06

DOCKET No. 272

NORTH

0 30' 60' HORIZONTAL SCALE IN FEET

0 5' 10' VERTICAL SCALE IN FEET

ISSUED FOR CONSTRUCTION

no.	date	revisions	by	chk
1	8/29/06	ISSUED FOR CONSTRUCTION	CTC	

Burns & McDonnell SINCE 1898

date	detailed
10/11/05	L. ROWSE
designed	checked
C. COURTRIGHT	S. NEWLAND

MF	NO.	DATE	REVISIONS	BY	CHK	APP	APP

NORTHEAST UTILITIES SERVICE CO.

FOR THE CONNECTICUT LIGHT & POWER COMPANY

TITLE MIDDLETOWN–NORWALK 345kV TRANSMISSION PROJECT

CITY OF MILFORD
PLAN AND PROFILE Sta. 1021+50 to 1030+00

BY SEN-BMCD	CHKD	APP	APP
DATE 10-11-05	DATE	DATE	DATE
SCALE AS NOTED	D	DWG. NO. 01223-10001 PG 005	

COPYRIGHT © 2006 BURNS & McDONNELL ENGINEERING COMPANY, INC.

NOTE:

1. SILT FENCE ON DOWNSLOPE SIDE OF CONSTRUCTION AREA, INCLUDING SPOIL PILES. WHEN AREAS ARE CURRENTLY PAVED USE CONNDOT APPROVED SEDIMENT CONTROL MEASURES.

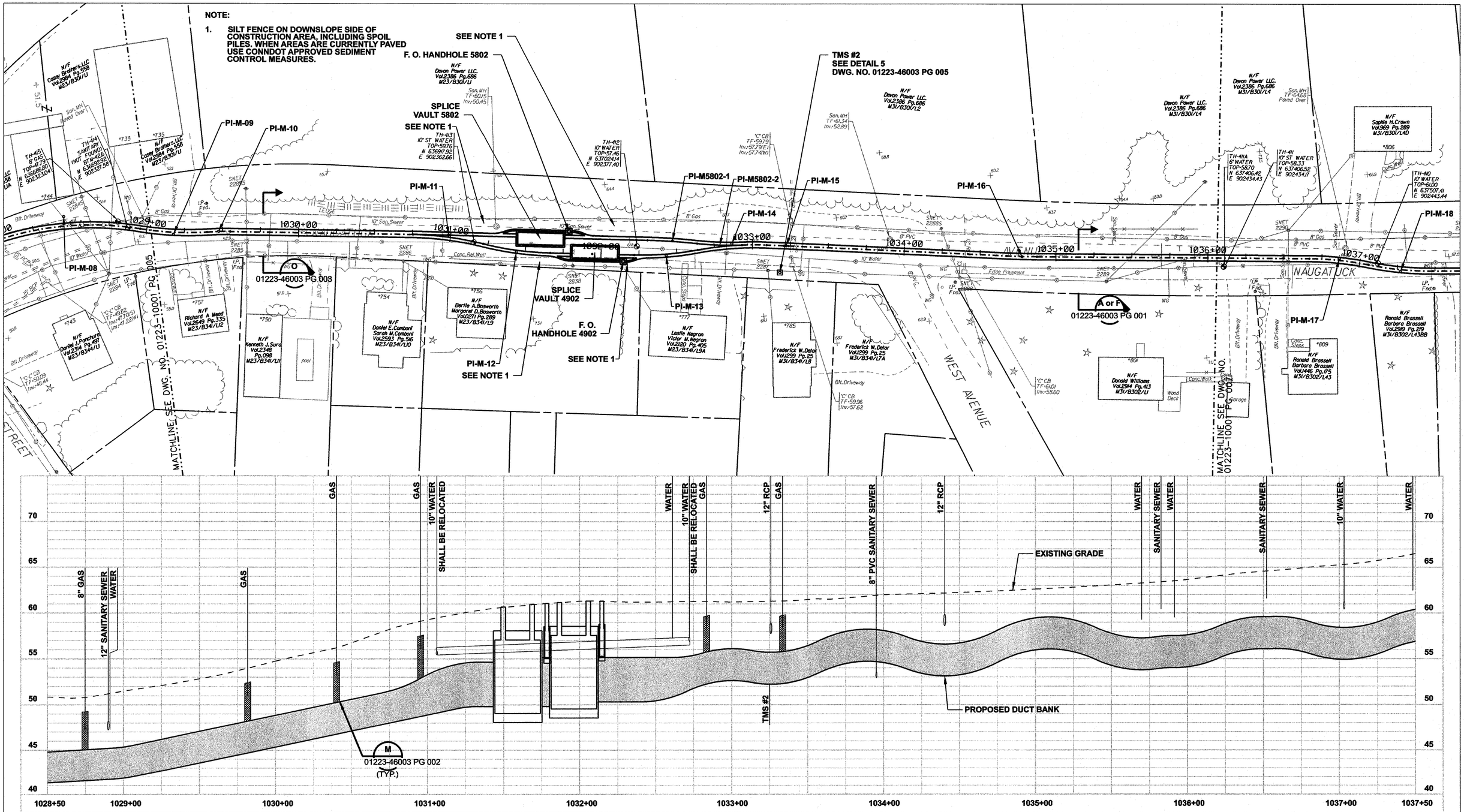

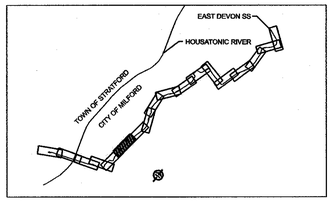

STATE OF CONNECTICUT
SCOTT E. NEWLAND
No. 24675
LICENSED
PROFESSIONAL ENGINEER
8/29/06

NORTH

DOCKET No. 272

0 30' 60'
HORIZONTAL SCALE IN FEET
0 5' 10'
VERTICAL SCALE IN FEET

ISSUED FOR CONSTRUCTION

no.	date	revisions	by	chk
1	8/29/06	ISSUED FOR CONSTRUCTION	CTC	

Burns & McDonnell
SINCE 1898

date 10/11/05
detailed L. ROWSE
designed C. COURTRIGHT
checked S. NEWLAND

MF	NO.	DATE	REVISIONS	BY	CHK	APP	APP

NORTHEAST UTILITIES SERVICE CO.

FOR THE CONNECTICUT LIGHT & POWER COMPANY

TITLE MIDDLETOWN–NORWALK 345kV TRANSMISSION PROJECT

CITY OF MILFORD
PLAN AND PROFILE Sta. 1028+50 to 1037+50

BY SEN-BMCD	CHKD	APP	APP
DATE 10-11-05	DATE	DATE	DATE
SCALE AS NOTED	D	DWG. NO. 01223-10001 PG 006	

COPYRIGHT © 2006 BURNS & McDONNELL ENGINEERING COMPANY, INC.

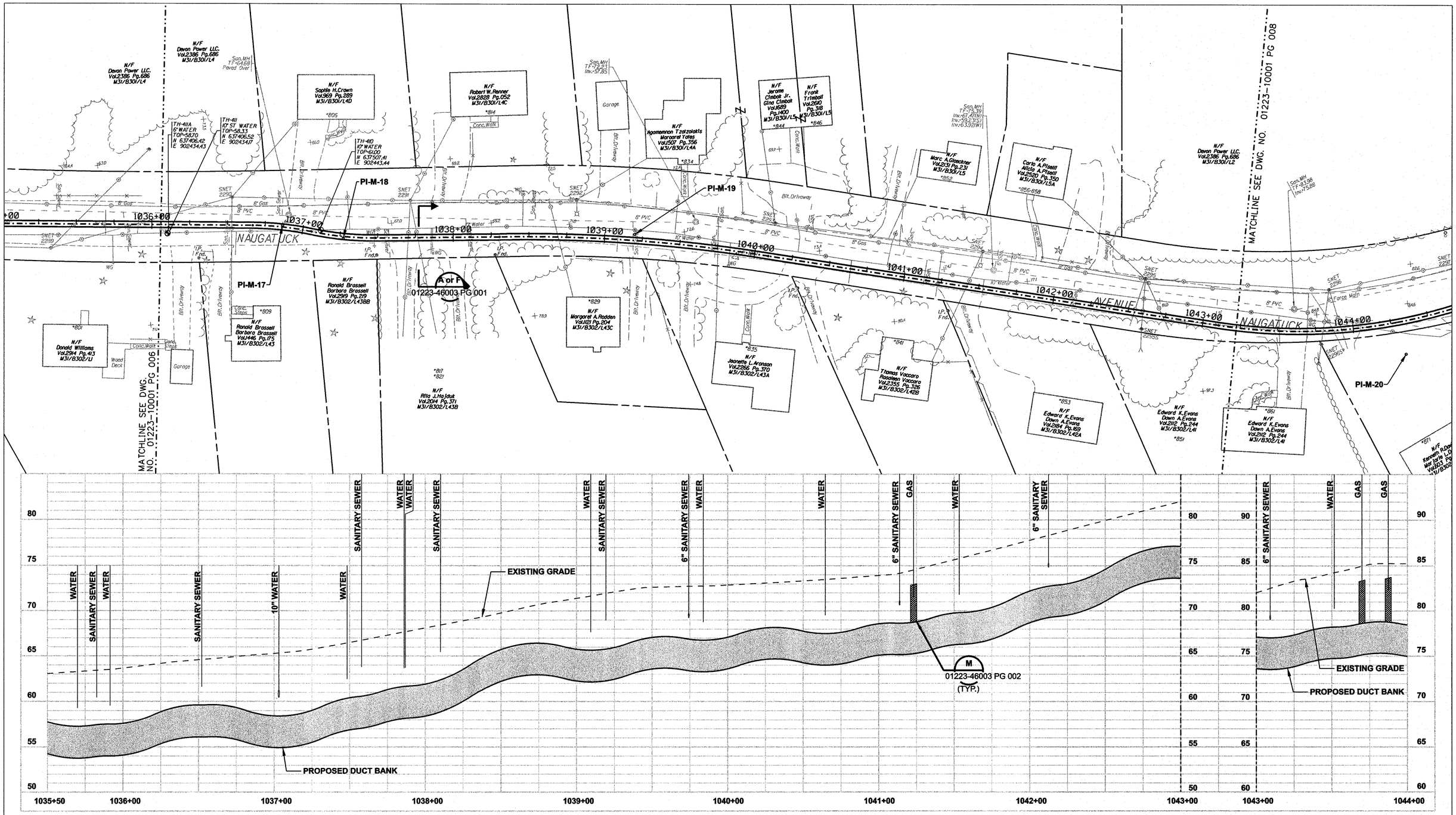

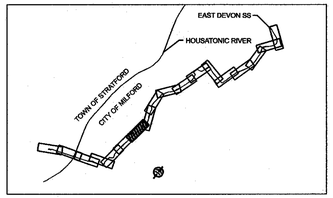

STATE OF CONNECTICUT
SCOTT E. NEWLAND
No. 24675
LICENSED PROFESSIONAL ENGINEER
8/29/06

NORTH

0 30' 60'
HORIZONTAL SCALE IN FEET
0 5' 10'
VERTICAL SCALE IN FEET

DOCKET No. 272

ISSUED FOR CONSTRUCTION

no.	date	revisions	by	chk
1	8/29/06	ISSUED FOR CONSTRUCTION	CTC	

Burns & McDonnell
SINCE 1898

date 10/11/05	detailed L. ROWSE
designed C. COURTRIGHT	checked S. NEWLAND

MF	NO.	DATE	REVISIONS	BY	CHK	APP	APP

NORTHEAST UTILITIES SERVICE CO.

FOR THE CONNECTICUT LIGHT & POWER COMPANY

TITLE MIDDLETOWN–NORWALK 345kV TRANSMISSION PROJECT

CITY OF MILFORD
PLAN AND PROFILE Sta. 1035+50 to 1044+00

BY SEN-BMCD	CHKD	APP	APP
DATE 10-11-05	DATE	DATE	DATE
SCALE AS NOTED	D	DWG. NO. 01223-10001 PG 007	

COPYRIGHT © 2006 BURNS & McDONNELL ENGINEERING COMPANY, INC.

NOTE:

1. SILT FENCE ON DOWNSLOPE SIDE OF CONSTRUCTION AREA, INCLUDING SPOIL PILES. WHEN AREAS ARE CURRENTLY PAVED USE CONNDOT APPROVED SEDIMENT CONTROL MEASURES.

2. TREES AND SHRUBBERY SHALL BE REMOVED

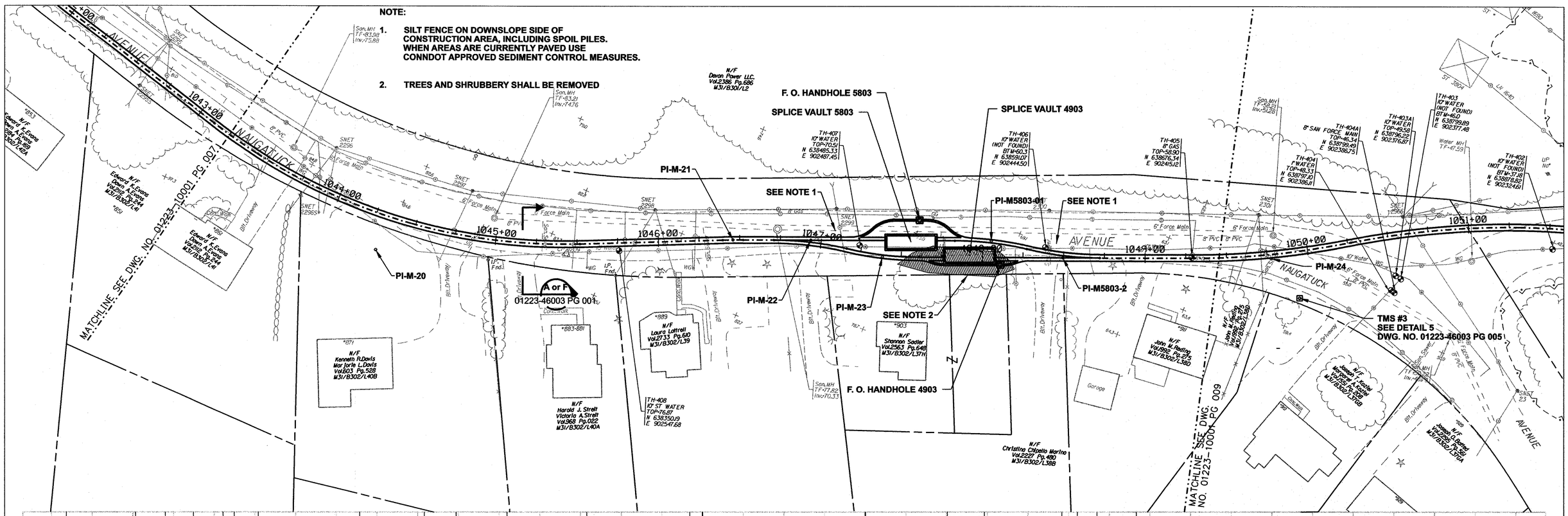

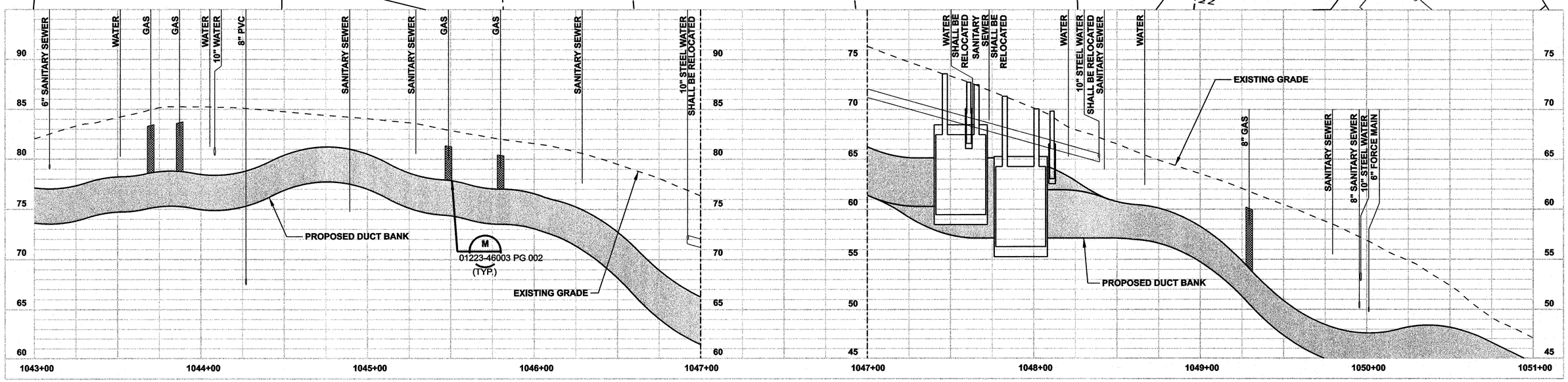

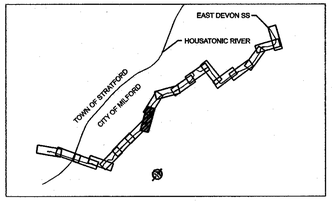

STATE OF CONNECTICUT SCOTT E. NEWLAND No. 24675 LICENSED PROFESSIONAL ENGINEER
8/29/06

NORTH

DOCKET No. 272

HORIZONTAL SCALE IN FEET 0 30' 60'

VERTICAL SCALE IN FEET 0 5' 10'

ISSUED FOR CONSTRUCTION

no.	date	revisions	by	chk
1	8/29/06	ISSUED FOR CONSTRUCTION	CTC	

Burns & McDonnell SINCE 1898

date 10/11/05 | detailed L. ROWSE

designed C. COURTRIGHT | checked S. NEWLAND

MF	NO.	DATE	REVISIONS	BY	CHK	APP	APP

NORTHEAST UTILITIES SERVICE CO.

FOR THE CONNECTICUT LIGHT & POWER COMPANY

TITLE MIDDLETOWN–NORWALK 345kV TRANSMISSION PROJECT

CITY OF MILFORD
PLAN AND PROFILE Sta. 1043+00 to 1051+00

BY SEN-BMCD	CHKD	APP	APP
DATE 10-11-05	DATE	DATE	DATE
SCALE AS NOTED	D	DWG. NO. 01223–10001 PG 008	

COPYRIGHT © 2006 BURNS & McDONNELL ENGINEERING COMPANY, INC.

NOTE:

1. SILT FENCE ON DOWNSLOPE SIDE OF CONSTRUCTION AREA, INCLUDING SPOIL PILES. WHEN AREAS ARE CURRENTLY PAVED USE CONNDOT APPROVED SEDIMENT CONTROL MEASURES.

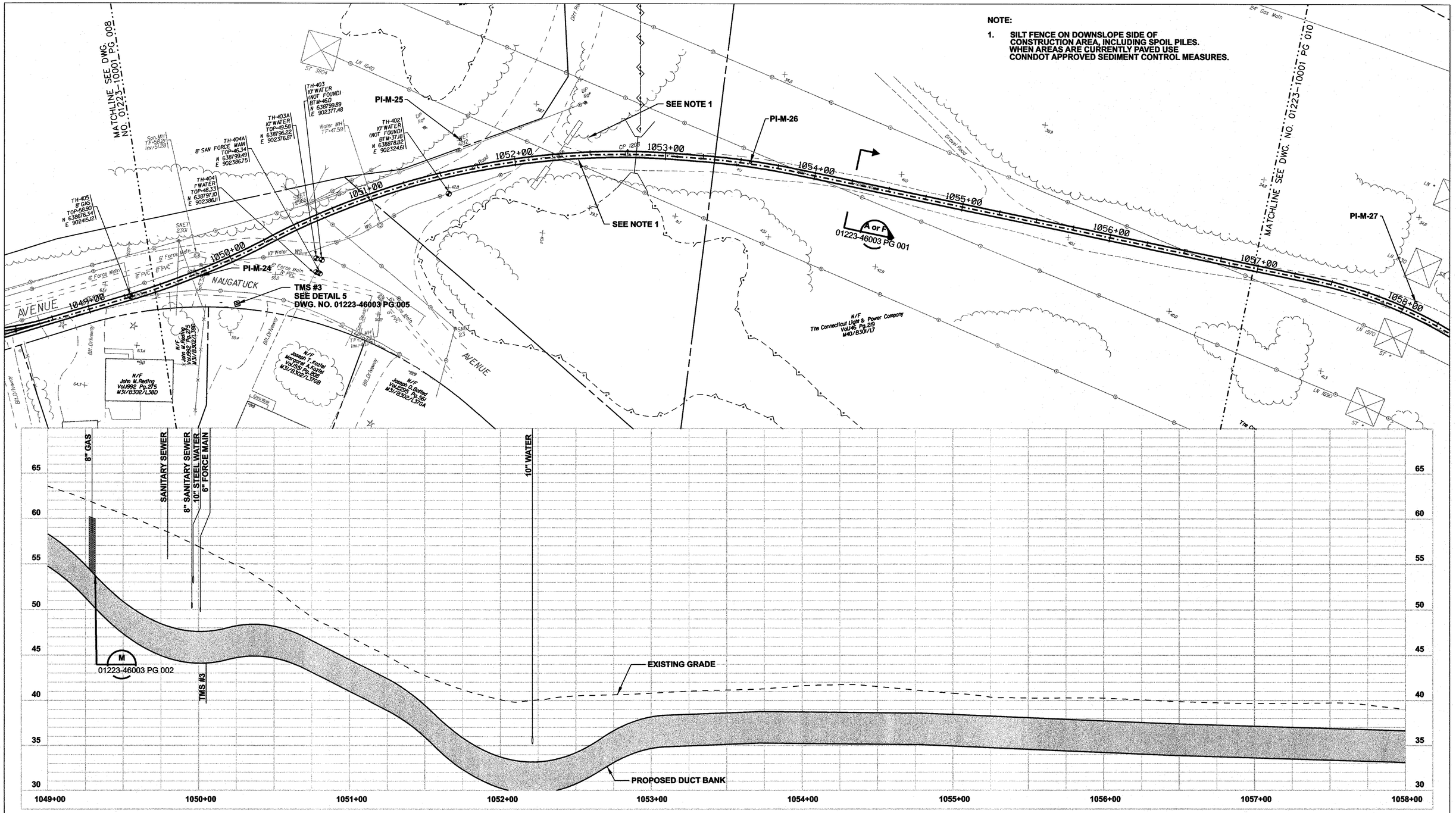

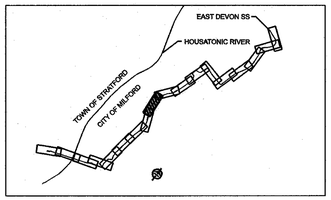

STATE OF CONNECTICUT
SCOTT E. NEWLAND
No. 24675
LICENSED
PROFESSIONAL ENGINEER
8/29/06

NORTH

0 30' 60'
HORIZONTAL SCALE IN FEET
0 5' 10'
VERTICAL SCALE IN FEET

DOCKET No. 272

ISSUED FOR CONSTRUCTION

no.	date	revisions	by	chk
1	8/29/06	ISSUED FOR CONSTRUCTION	CTC	

Burns & McDonnell
SINCE 1898

date 10/11/05
designed C. COURTRIGHT
detailed L. ROWSE
checked S. NEWLAND

MF	NO.	DATE	REVISIONS	BY	CHK	APP	APP

NORTHEAST UTILITIES SERVICE CO.

FOR THE CONNECTICUT LIGHT & POWER COMPANY

TITLE MIDDLETOWN–NORWALK 345kV TRANSMISSION PROJECT

CITY OF MILFORD
PLAN AND PROFILE Sta. 1049+00 to 1058+00

BY SEN-BMCD	CHKD	APP	APP
DATE 10-11-05	DATE	DATE	DATE
SCALE AS NOTED	D	DWG. NO. 01223-10001 PG 009	

COPYRIGHT © 2006 BURNS & McDONNELL ENGINEERING COMPANY, INC.

NOTE:

1. TREES AND SHRUBBERY SHALL BE REMOVED

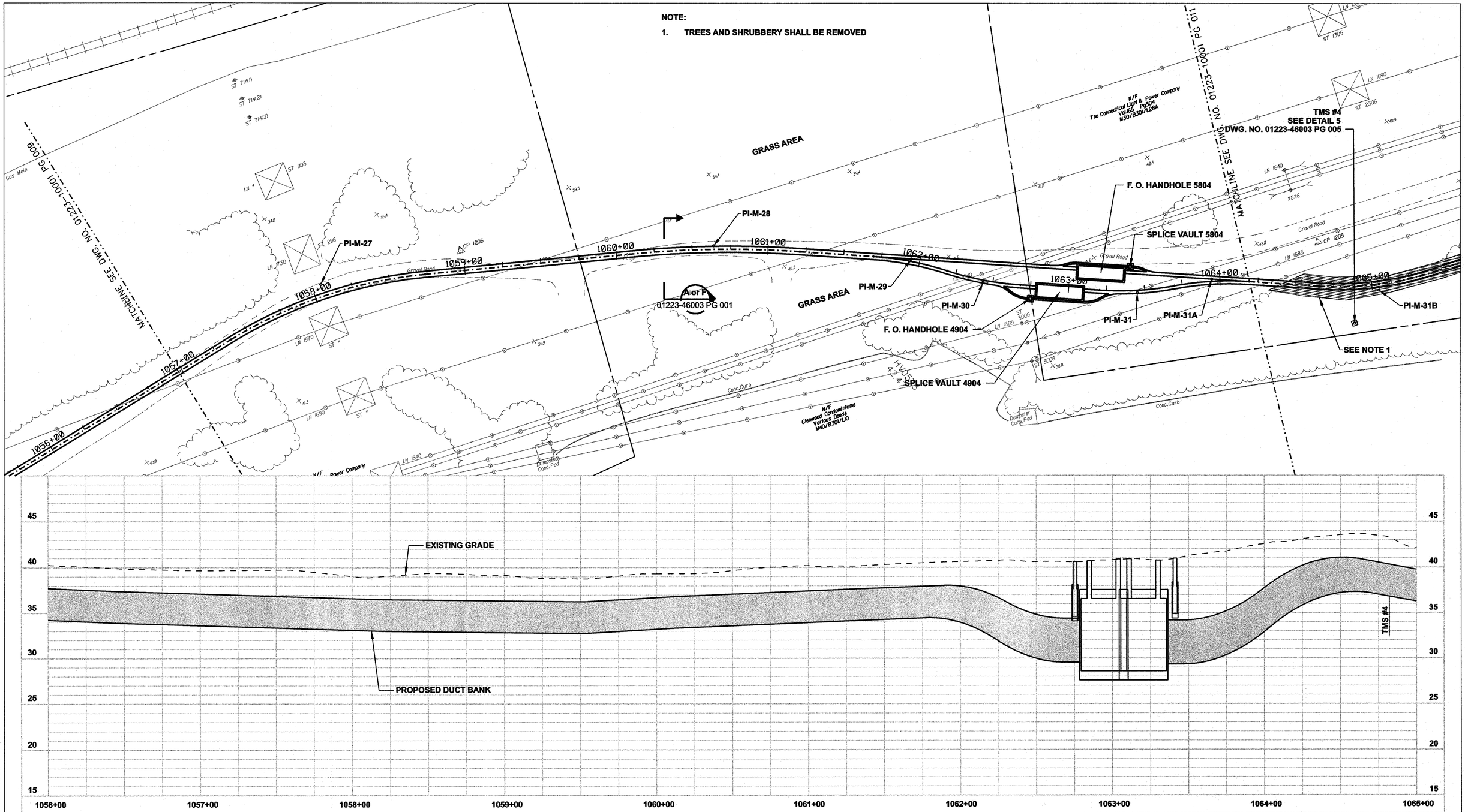

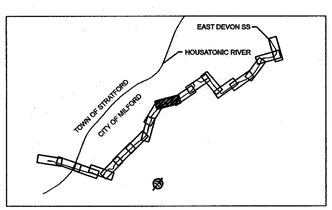

STATE OF CONNECTICUT
SCOTT E. NEWLAND
No. 24675
LICENSED
PROFESSIONAL ENGINEER
8/29/06

NORTH

0 30' 60'
HORIZONTAL SCALE IN FEET
0 5' 10'
VERTICAL SCALE IN FEET

DOCKET No. 272

ISSUED FOR CONSTRUCTION

no.	date	revisions	by	chk
1	8/29/06	ISSUED FOR CONSTRUCTION	CTC	

Burns & McDonnell
SINCE 1898

date 10/11/05	detailed L. ROWSE
designed C. COURTRIGHT	checked S. NEWLAND

MF	NO.	DATE	REVISIONS	BY	CHK	APP	APP

NORTHEAST UTILITIES SERVICE CO.

FOR THE CONNECTICUT LIGHT & POWER COMPANY

TITLE MIDDLETOWN–NORWALK 345kV TRANSMISSION PROJECT

CITY OF MILFORD
PLAN AND PROFILE Sta. 1056+00 to 1065+00

BY SEN-BMCD	CHKD	APP	APP
DATE 10-11-05	DATE	DATE	DATE
SCALE AS NOTED	D	DWG. NO. 01223-10001 PG 010	

COPYRIGHT © 2006 BURNS & McDONNELL ENGINEERING COMPANY, INC.

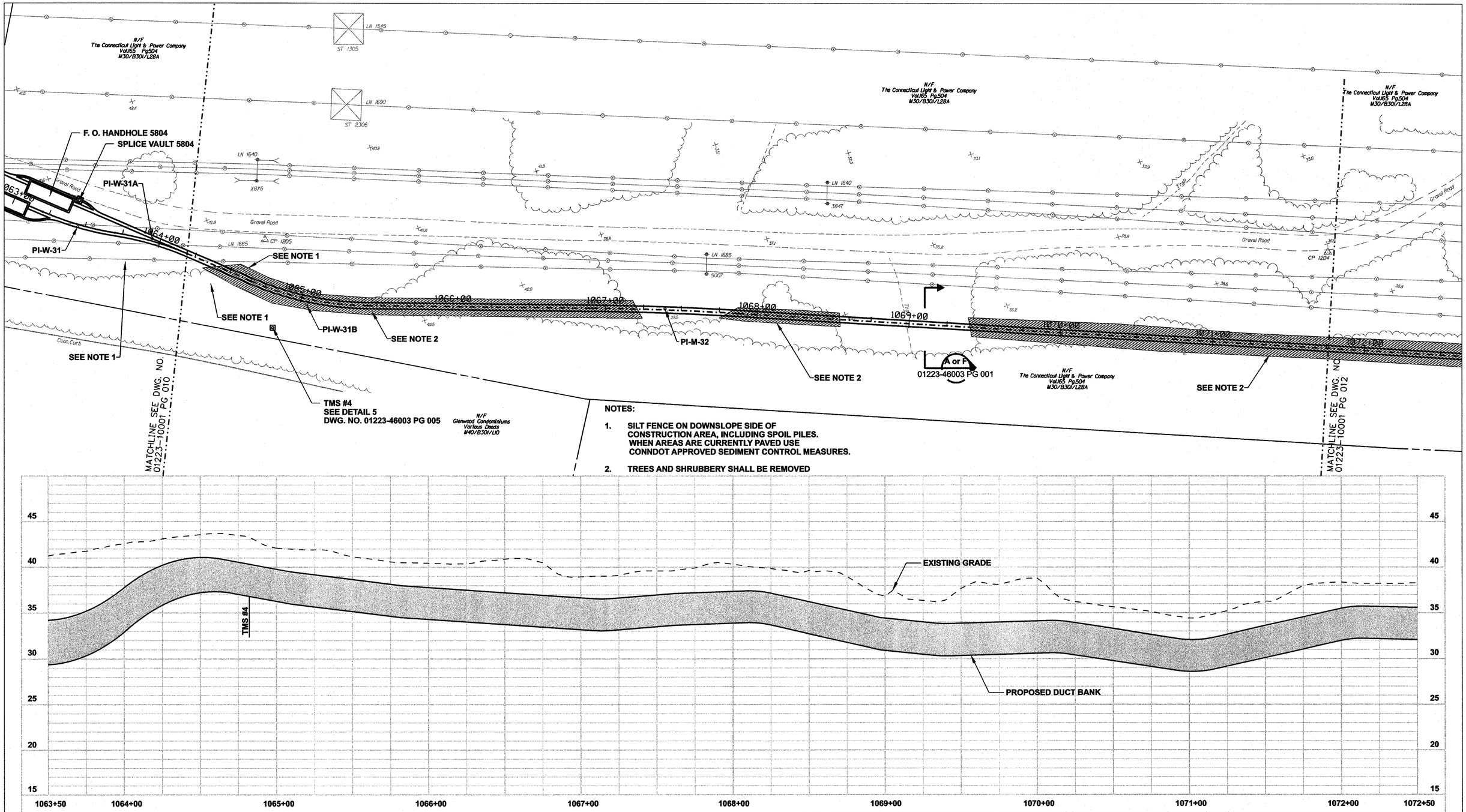

NOTES:

1. SILT FENCE ON DOWNSLOPE SIDE OF CONSTRUCTION AREA, INCLUDING SPOIL PILES. WHEN AREAS ARE CURRENTLY PAVED USE CONNDOT APPROVED SEDIMENT CONTROL MEASURES.
2. TREES AND SHRUBBERY SHALL BE REMOVED

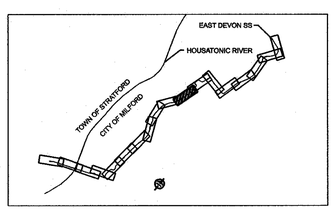

STATE OF CONNECTICUT
SCOTT E. NEWLAND
No. 24675
LICENSED
PROFESSIONAL ENGINEER
8/29/06

DOCKET No. 272

NORTH

0 30' 60'
HORIZONTAL SCALE IN FEET
0 5' 10'
VERTICAL SCALE IN FEET

ISSUED FOR CONSTRUCTION

no.	date	revisions	by	chk
1	8/29/06	ISSUED FOR CONSTRUCTION	CTC	

Burns & McDonnell
SINCE 1898

date 10/11/05
detailed L. ROWSE
designed C. COURTRIGHT
checked S. NEWLAND

MF	NO.	DATE	REVISIONS	BY	CHK	APP	APP

NORTHEAST UTILITIES SERVICE CO.

FOR THE CONNECTICUT LIGHT & POWER COMPANY

TITLE MIDDLETOWN-NORWALK 345kV TRANSMISSION PROJECT

CITY OF MILFORD
PLAN AND PROFILE Sta. 1063+50 to 1072+50

BY SEN-BMCD	CHKD	APP	APP
DATE 10-11-05	DATE	DATE	DATE
SCALE AS NOTED	D	DWG. NO. 01223-10001 PG 011	

COPYRIGHT © 2006 BURNS & McDONNELL ENGINEERING COMPANY, INC.

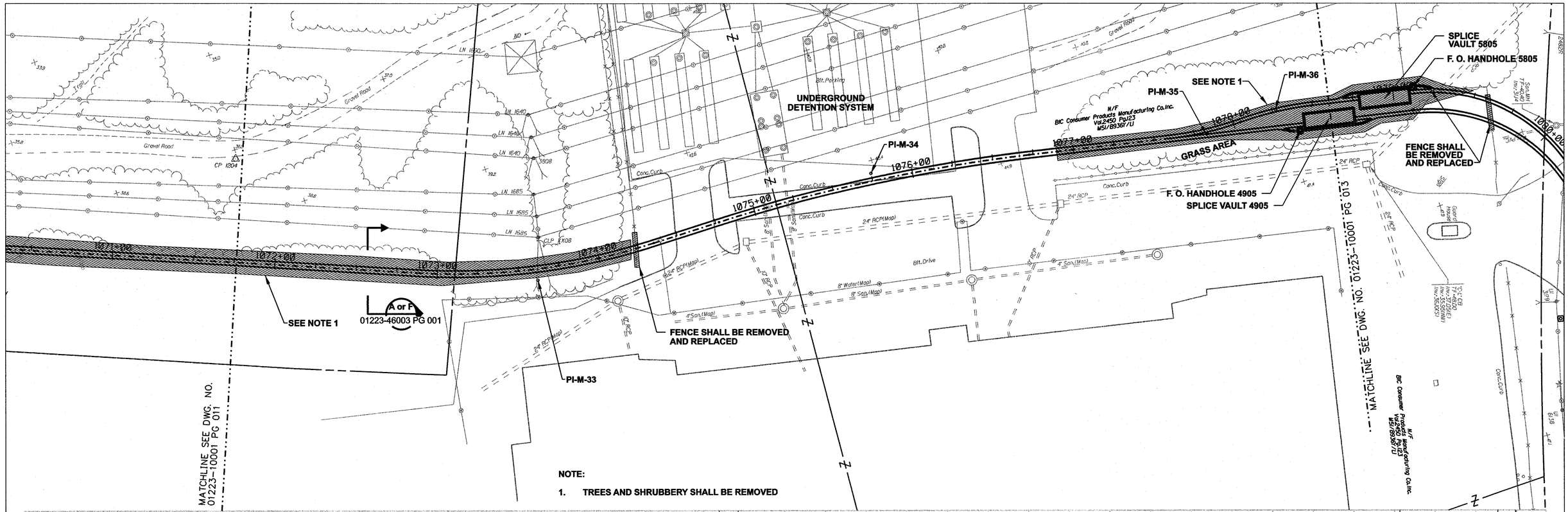

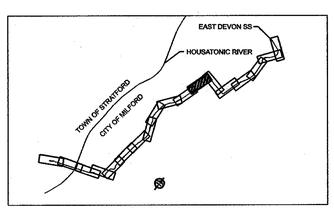

STATE OF CONNECTICUT
SCOTT E. NEWLAND
No. 24675
LICENSED
PROFESSIONAL ENGINEER
8/29/06

DOCKET No. 272

NORTH

0 30' 60'
HORIZONTAL SCALE IN FEET
0 5' 10'
VERTICAL SCALE IN FEET

ISSUED FOR CONSTRUCTION

no.	date	revisions	by	chk
1	8/29/06	ISSUED FOR CONSTRUCTION	CTC	

Burns & McDonnell
SINCE 1898

date 10/11/05
designed C. COURTRIGHT
detailed L. ROWSE
checked S. NEWLAND

MF	NO.	DATE	REVISIONS	BY	CHK	APP	APP

NORTHEAST UTILITIES SERVICE CO.

FOR THE CONNECTICUT LIGHT & POWER COMPANY

TITLE MIDDLETOWN–NORWALK 345kV TRANSMISSION PROJECT

CITY OF MILFORD
PLAN AND PROFILE Sta. 1071+00 to 1080+00

BY SEN-BMCD	CHKD	APP	APP
DATE 10-11-05	DATE	DATE	DATE
SCALE AS NOTED	D	DWG. NO. 01223-10001 PG 012	

COPYRIGHT © 2006 BURNS & McDONNELL ENGINEERING COMPANY, INC.

NOTES:

1. SILT FENCE ON DOWNSLOPE SIDE OF CONSTRUCTION AREA, INCLUDING SPOIL PILES. WHEN AREAS ARE CURRENTLY PAVED USE CONNDOT APPROVED SEDIMENT CONTROL MEASURES.
2. TREES AND SHRUBBERY SHALL BE REMOVED

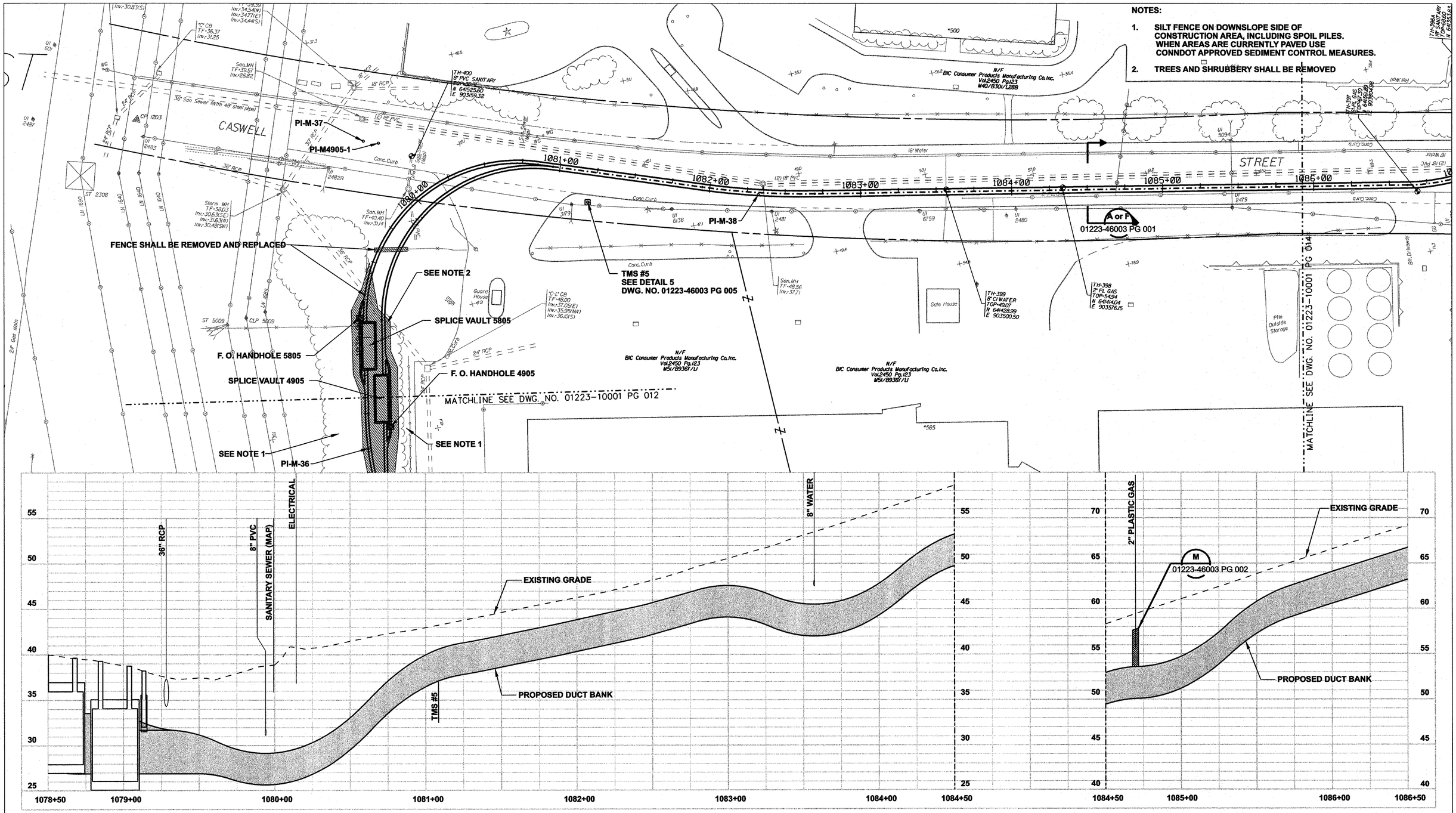

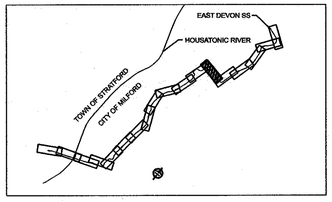

STATE OF CONNECTICUT
SCOTT E. NEWLAND
No. 24675
LICENSED
PROFESSIONAL ENGINEER
8/29/06

NORTH

0 30' 60'
HORIZONTAL SCALE IN FEET
0 5' 10'
VERTICAL SCALE IN FEET

ISSUED FOR CONSTRUCTION

DOCKET No. 272

no.	date	revisions	by	chk
1	8/29/06	ISSUED FOR CONSTRUCTION	CTC	

Burns & McDonnell
SINCE 1898

date 10/11/05
detailed L. ROWSE
designed C. COURTRIGHT
checked S. NEWLAND

MF	NO.	DATE	REVISIONS	BY	CHK	APP	APP

NORTHEAST UTILITIES SERVICE CO.

FOR THE CONNECTICUT LIGHT & POWER COMPANY

TITLE MIDDLETOWN–NORWALK 345kV TRANSMISSION PROJECT

CITY OF MILFORD
PLAN AND PROFILE Sta. 1078+50 to 1086+50

BY SEN-BMCD	CHKD	APP	APP
DATE 10-11-05	DATE	DATE	DATE
SCALE AS NOTED	D	DWG. NO. 01223-10001 PG 013	

COPYRIGHT © 2006 BURNS & McDONNELL ENGINEERING COMPANY, INC.

NOTE:

1. **TREES AND SHRUBBERY SHALL BE REMOVED**

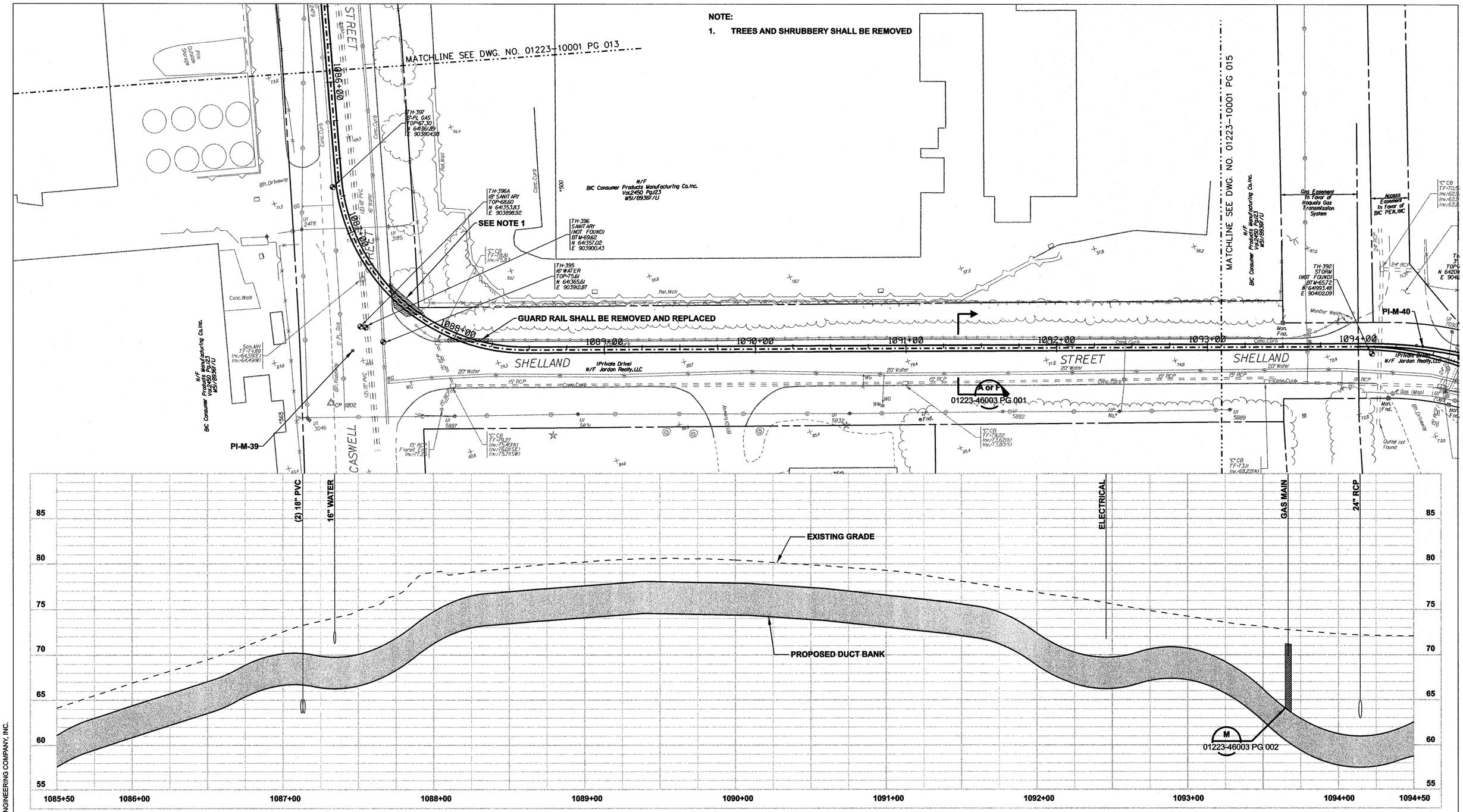

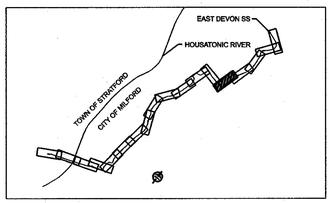

STATE OF CONNECTICUT
SCOTT E. NEWLAND
No. 24675
LICENSED PROFESSIONAL ENGINEER
8/29/06

DOCKET No. 272

NORTH

0 30' 60'
HORIZONTAL SCALE IN FEET
0 5' 10'
VERTICAL SCALE IN FEET

ISSUED FOR CONSTRUCTION

no.	date	revisions	by	chk
1	8/29/06	ISSUED FOR CONSTRUCTION	CTC	

Burns & McDonnell
SINCE 1898

date 10/11/05	detailed L. ROWSE
designed C. COURTRIGHT	checked S. NEWLAND

MF	NO.	DATE	REVISIONS	BY	CHK	APP	APP

NORTHEAST UTILITIES SERVICE CO.

FOR THE CONNECTICUT LIGHT & POWER COMPANY

TITLE MIDDLETOWN–NORWALK 345kV TRANSMISSION PROJECT

CITY OF MILFORD
PLAN AND PROFILE Sta. 1085+50 to 1094+50

BY SEN–BMCD	CHKD	APP	APP
DATE 10–11–05	DATE	DATE	DATE
SCALE AS NOTED	D	DWG. NO. 01223–10001 PG 014	

COPYRIGHT © 2006 BURNS & McDONNELL ENGINEERING COMPANY, INC.

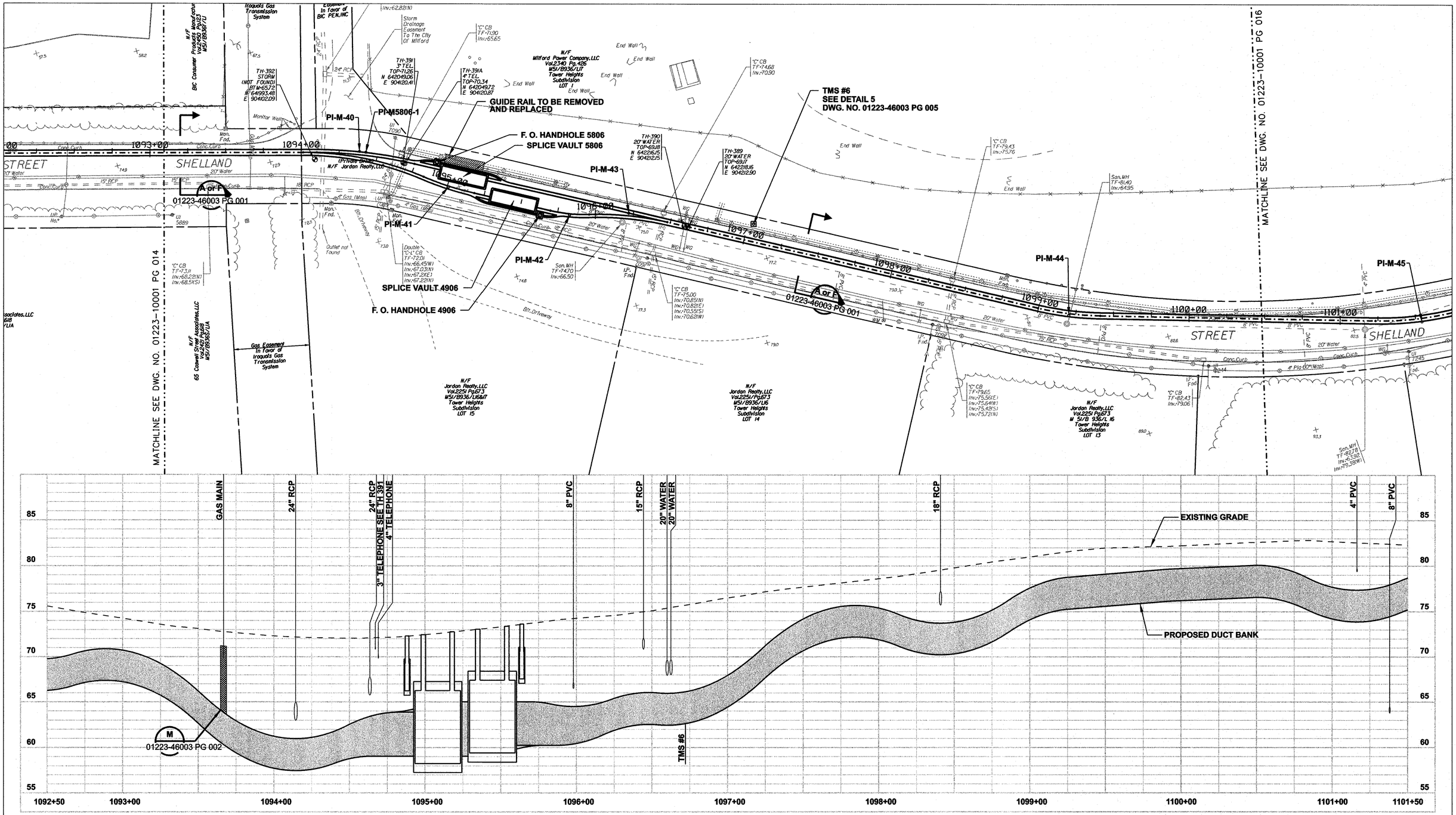

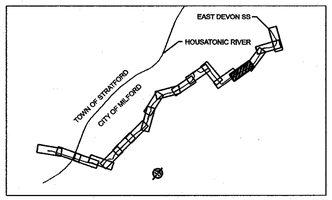

STATE OF CONNECTICUT
SCOTT E. NEWLAND
No. 24675
LICENSED
PROFESSIONAL ENGINEER
8/29/06

DOCKET No. 272

NORTH

HORIZONTAL SCALE IN FEET 0 30' 60'

VERTICAL SCALE IN FEET 0 5' 10'

ISSUED FOR CONSTRUCTION

no.	date	revisions	by	chk
1	8/29/06	ISSUED FOR CONSTRUCTION	CTC	

Burns & McDonnell
SINCE 1898

date 10/11/05
detailed L. ROWSE
designed C. COURTRIGHT
checked S. NEWLAND

MF	NO.	DATE	REVISIONS	BY	CHK	APP	APP

NORTHEAST UTILITIES SERVICE CO.

FOR THE CONNECTICUT LIGHT & POWER COMPANY

TITLE MIDDLETOWN–NORWALK 345kV TRANSMISSION PROJECT

CITY OF MILFORD
PLAN AND PROFILE Sta. 1092+50 to 1101+50

BY SEN-BMCD	CHKD	APP	APP
DATE 10-11-05	DATE	DATE	DATE
SCALE AS NOTED	D	DWG. NO. 01223-10001 PG 015	

COPYRIGHT © 2006 BURNS & McDONNELL ENGINEERING COMPANY, INC.

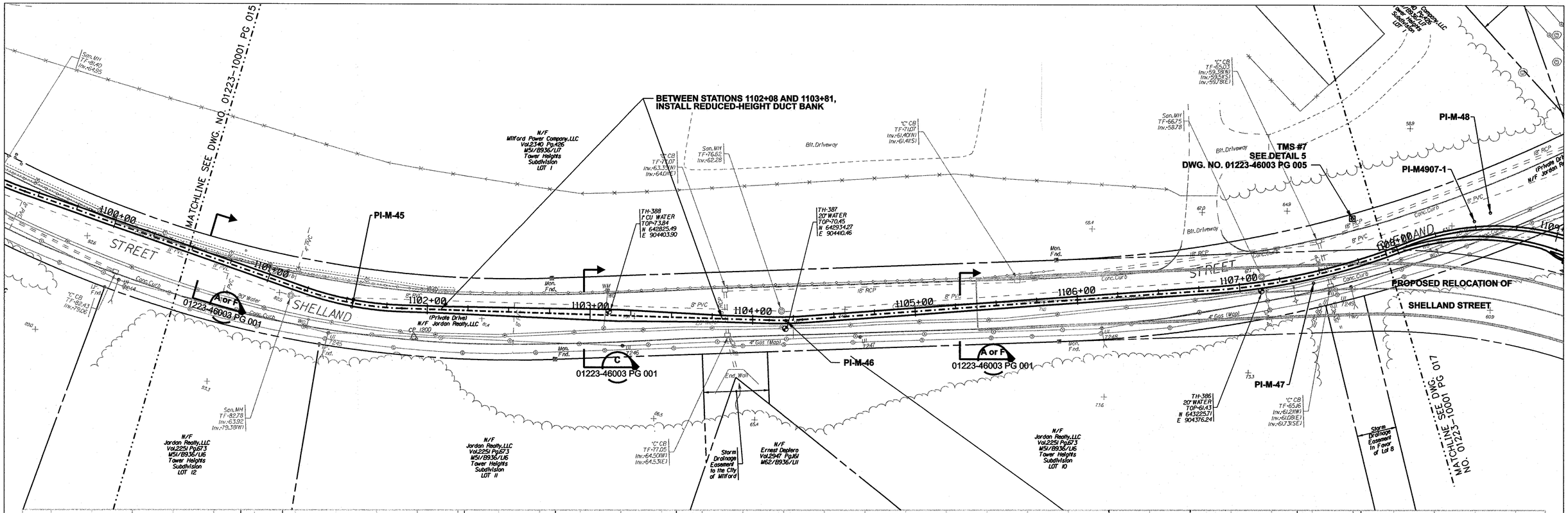

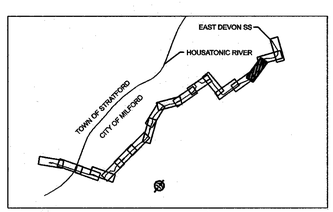

STATE OF CONNECTICUT
SCOTT E. NEWLAND
No. 24675
LICENSED PROFESSIONAL ENGINEER
8/29/06

NORTH

0 30' 60'
HORIZONTAL SCALE IN FEET
0 5' 10'
VERTICAL SCALE IN FEET

DOCKET No. 272

ISSUED FOR CONSTRUCTION

no.	date	revisions	by	chk
1	8/29/06	ISSUED FOR CONSTRUCTION	CTC	

Burns & McDonnell
SINCE 1898

date 10/11/05
detailed L. ROWSE
designed C. COURTRIGHT
checked S. NEWLAND

MF	NO.	DATE	REVISIONS	BY	CHK	APP	APP

NORTHEAST UTILITIES SERVICE CO.

FOR THE CONNECTICUT LIGHT & POWER COMPANY

TITLE MIDDLETOWN–NORWALK 345kV TRANSMISSION PROJECT

CITY OF MILFORD
PLAN AND PROFILE Sta. 1100+00 to 1108+50

BY SEN–BMCD	CHKD	APP	APP
DATE 10–11–05	DATE	DATE	DATE
SCALE AS NOTED	D	DWG. NO. 01223–10001 PG 016	

COPYRIGHT © 2006 BURNS & McDONNELL ENGINEERING COMPANY, INC.

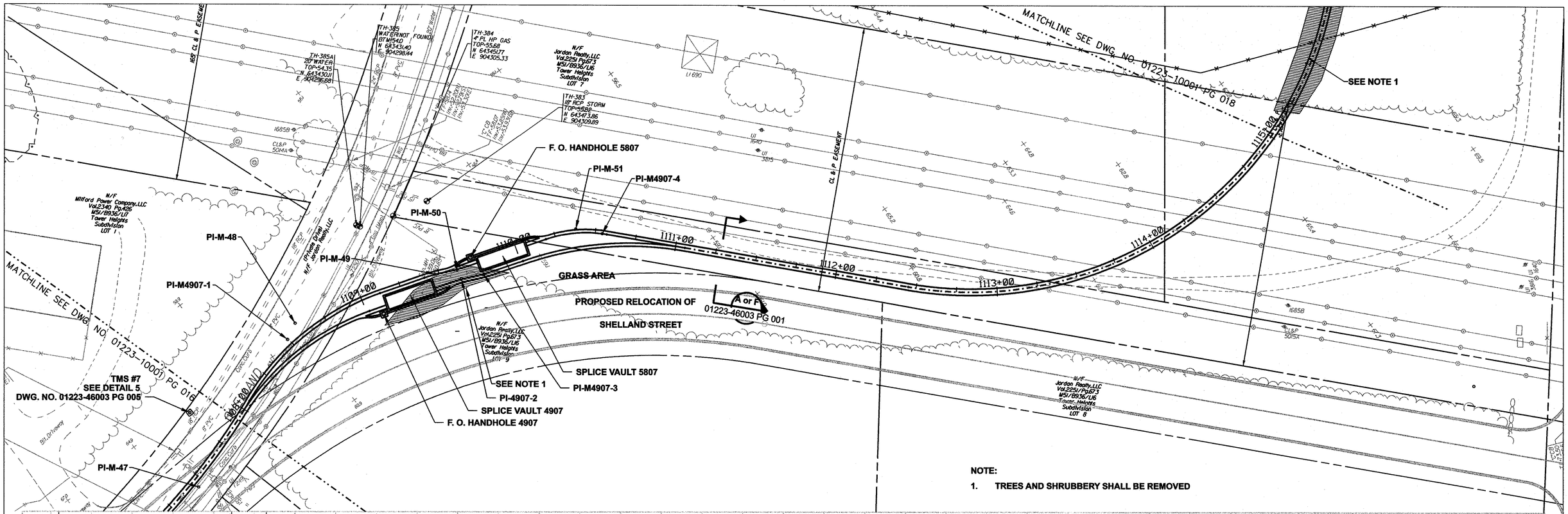

NOTE:

1. TREES AND SHRUBBERY SHALL BE REMOVED

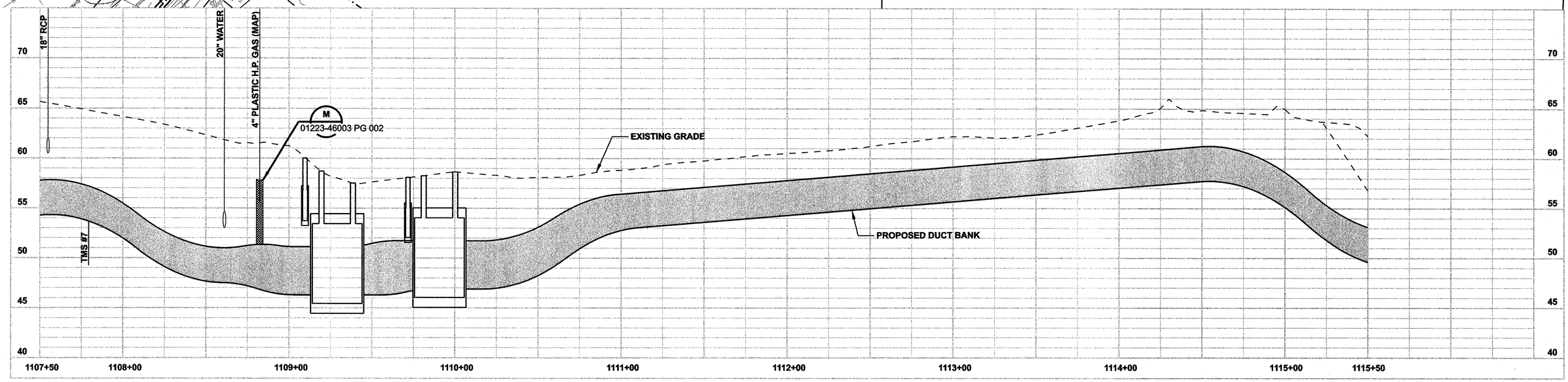

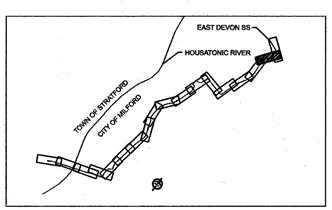

STATE OF CONNECTICUT
SCOTT E. NEWLAND
No. 24675
LICENSED
PROFESSIONAL ENGINEER
8/29/06

NORTH

DOCKET No. 272

0 30' 60'
HORIZONTAL SCALE IN FEET
0 5' 10'
VERTICAL SCALE IN FEET

ISSUED FOR CONSTRUCTION

no.	date	revisions	by	chk
1	8/29/06	ISSUED FOR CONSTRUCTION	CTC	

Burns & McDonnell
SINCE 1898

date	detailed
10/11/05	L. ROWSE
designed	checked
C. COURTRIGHT	S. NEWLAND

MF	NO.	DATE	REVISIONS	BY	CHK	APP	APP

NORTHEAST UTILITIES SERVICE CO.

FOR THE CONNECTICUT LIGHT & POWER COMPANY

TITLE MIDDLETOWN–NORWALK 345kV TRANSMISSION PROJECT

CITY OF MILFORD
PLAN AND PROFILE Sta. 1107+50 to 1115+50

BY SEN–BMCD	CHKD	APP	APP
DATE 10–11–05	DATE	DATE	DATE
SCALE AS NOTED	D	DWG. NO. 01223–10001 PG 017	

COPYRIGHT © 2006 BURNS & McDONNELL ENGINEERING COMPANY, INC.

NOTES:

1. SILT FENCE ON DOWNSLOPE SIDE OF CONSTRUCTION AREA, INCLUDING SPOIL PILES. WHEN AREAS ARE CURRENTLY PAVED USE CONNDOT APPROVED SEDIMENT CONTROL MEASURES.
2. TREES AND SHRUBBERY SHALL BE REMOVED

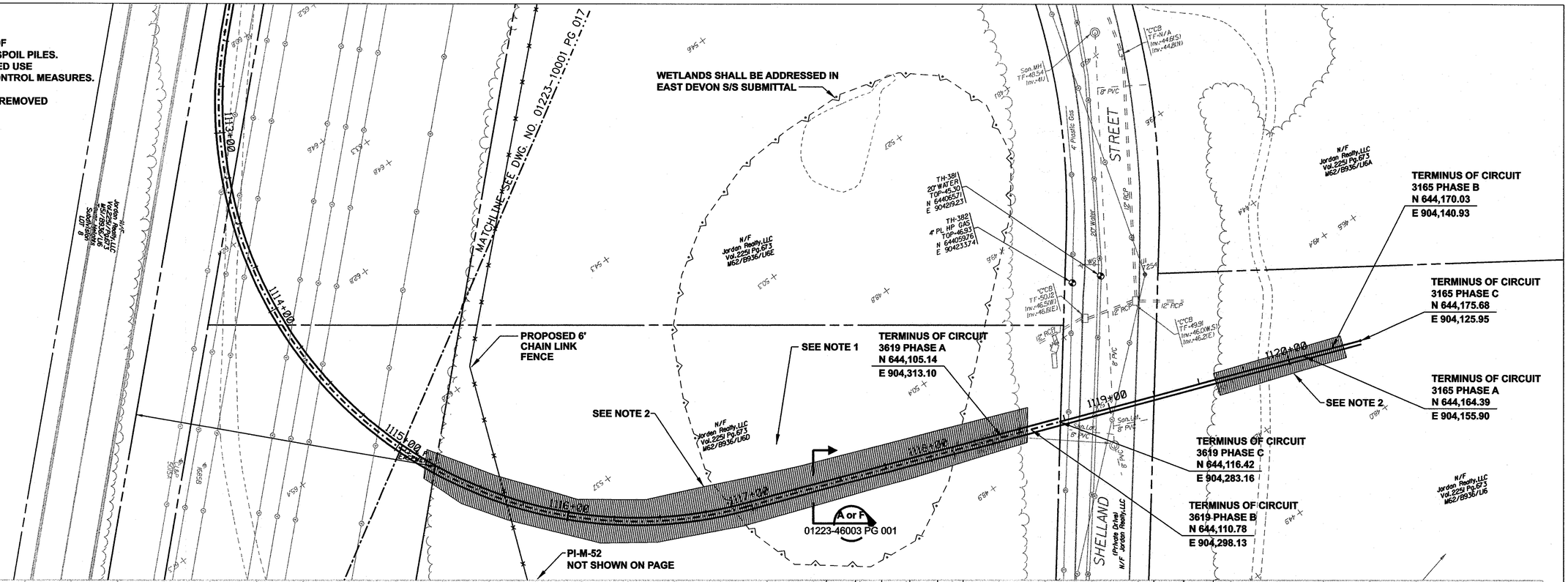

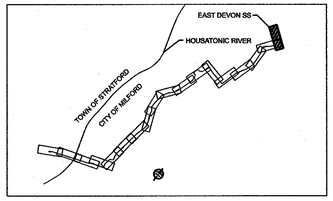

STATE OF CONNECTICUT SCOTT E. NEWLAND No. 24675 LICENSED PROFESSIONAL ENGINEER
8/29/06

NORTH

DOCKET No. 272

0 30' 60' HORIZONTAL SCALE IN FEET
0 5' 10' VERTICAL SCALE IN FEET

ISSUED FOR CONSTRUCTION

no.	date	revisions	by	chk
1	8/29/06	ISSUED FOR CONSTRUCTION	CTC	

Burns & McDonnell SINCE 1898

date 10/11/05 | detailed L. ROWSE
designed C. COURTRIGHT | checked S. NEWLAND

MF	NO.	DATE	REVISIONS	BY	CHK	APP	APP

NORTHEAST UTILITIES SERVICE CO.

FOR THE CONNECTICUT LIGHT & POWER COMPANY

TITLE MIDDLETOWN–NORWALK 345kV TRANSMISSION PROJECT

CITY OF MILFORD
PLAN AND PROFILE Sta. 1113+00 to EAST DEVON SS

BY SEN-BMCD	CHKD	APP	APP
DATE 10-11-05	DATE	DATE	DATE
SCALE AS NOTED	D	DWG. NO. 01223-10001 PG 018	

COPYRIGHT © 2006 BURNS & McDONNELL ENGINEERING COMPANY, INC.

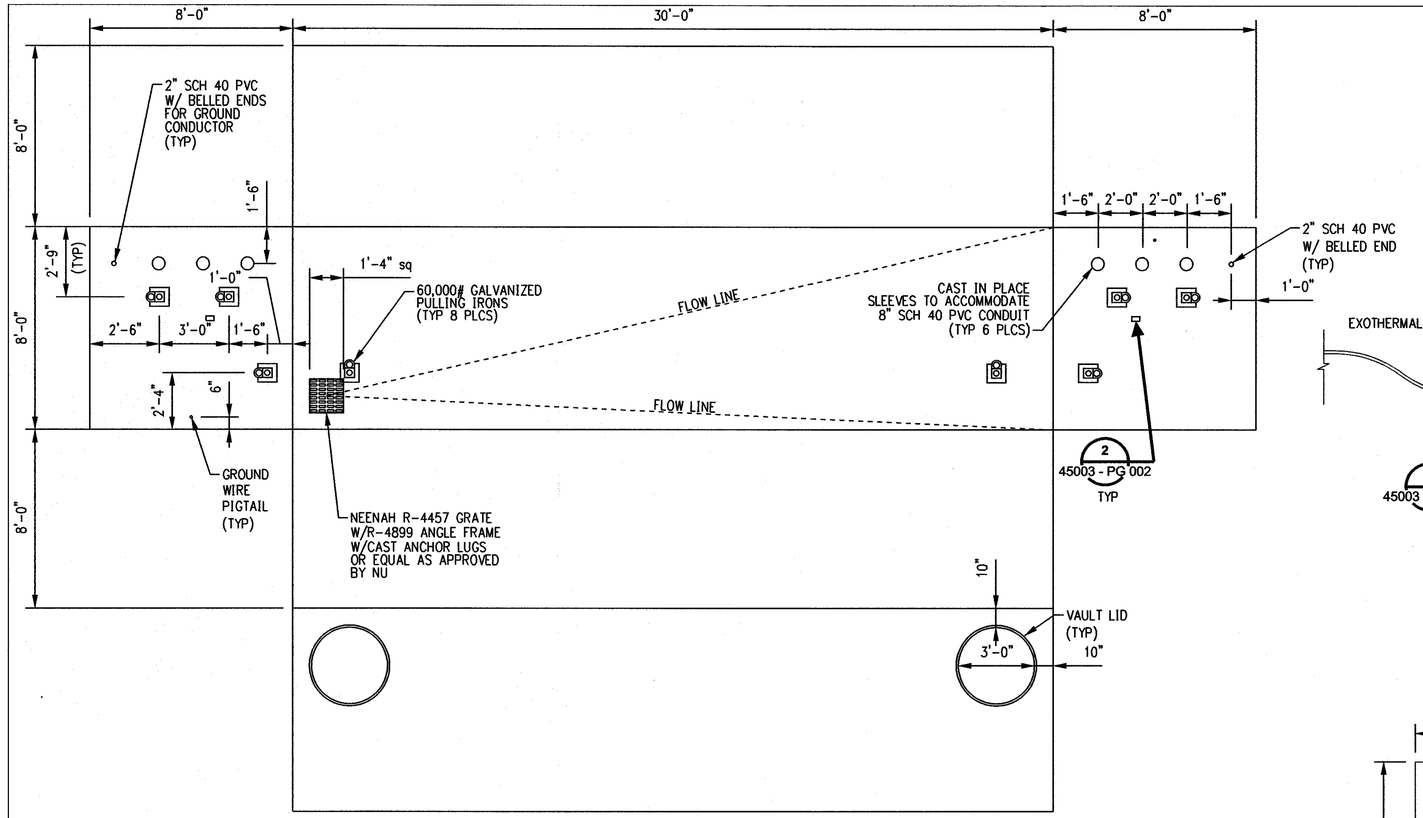

TYPICAL SPLICE VAULT DEVELOPMENT PLAN

DETAIL 5
NTS

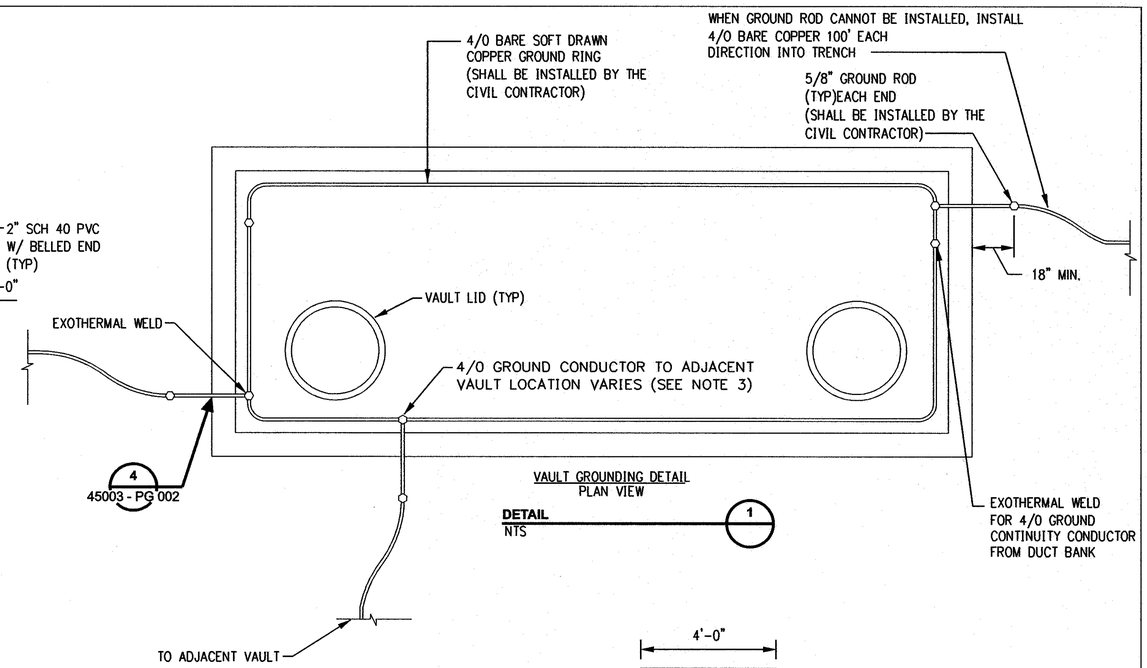

VAULT GROUNDING DETAIL
PLAN VIEW

DETAIL 1
NTS

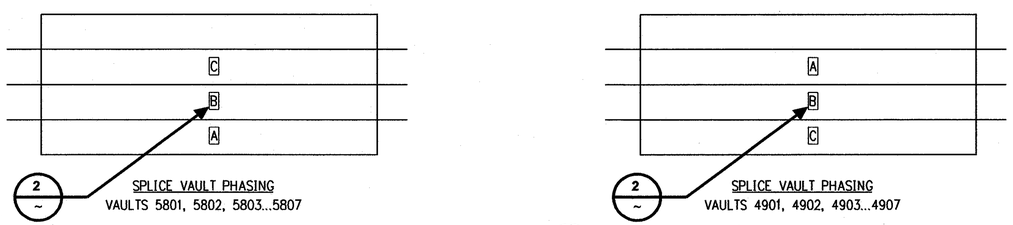

DETAIL 6
NTS

NOTES:

1. GROUND PIGTAILS TO EXTEND A MINIMUM OF 18 INCHES FROM BOTH SIDES OF VAULT WALL PENETRATION.
2. ALL EXTERNAL AREAS OF VAULT SHALL BE SEALED USING SONNEDORN HYDROCIDE 700 OR APPROVED NU EQUIVALENT.
3. EACH VAULT SHALL HAVE AN ADDITIONAL 2" SCHEDULE 40 PVC WITH BELLED ENDS CAST IN PLACE TO CONNECT INTERNAL VAULT GROUNDING AND COMPLETE CONNECTION WITH EXOTHERMAL WELD.

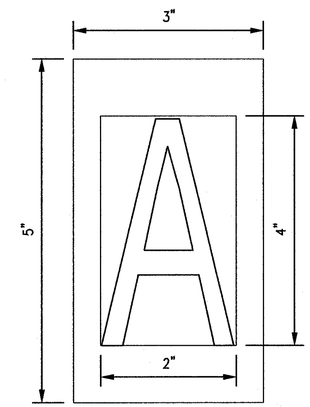

NOTES:

1. CHARACTER SHALL BE 4" HIGH BOLD TYPE.
2. CHARACTER SHALL BE CENTERED ON SIGN.
3. BACKGROUND: WHITE
   LETTERING: BLACK
   CHARACTERS: A, B & C AS SHOWN
4. ELECTRICAL CONTRACTOR SHALL ATTACH TAG TO SPLICE.

DETAIL 2
NTS

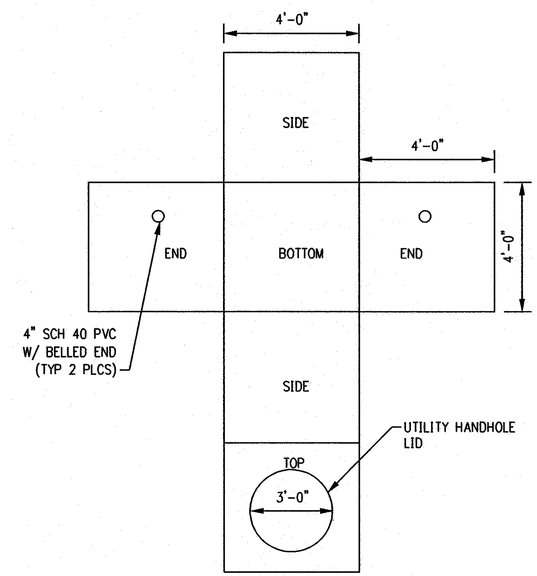

TYPICAL FIBER OPTIC HANDHOLE DEVELOPMENT PLAN

DETAIL 3
NTS

STATE OF CONNECTICUT
ROBERT E. NEWLAND
No. 24675
LICENSED
PROFESSIONAL ENGINEER
8/29/06

ISSUED FOR CONSTRUCTION

DOCKET No. 272

no.	date	revisions	by	chk
1	8/29/06	ISSUED FOR CONSTRUCTION	CTC	

Burns & McDonnell
SINCE 1898

date	detailed
8/15/05	L. ROWSE
designed	checked
C. COURTRIGHT	S. NEWLAND

MF	NO.	DATE	REVISIONS	BY	CHK	APP	APP

NORTHEAST UTILITIES SERVICE CO.

FOR THE CONNECTICUT LIGHT & POWER COMPANY

TITLE MIDDLETOWN-NORWALK 345kV TRANSMISSION PROJECT

VAULT, GROUNDING AND HANDHOLE DETAILS

BY SEN-BMCD	CHKD	APP	APP
DATE 8-15-05	DATE	DATE	DATE
SCALE AS NOTED	D	DWG. NO. 01223-45003 PG 001	

COPYRIGHT © 2006 BURNS & McDONNELL ENGINEERING COMPANY, INC.

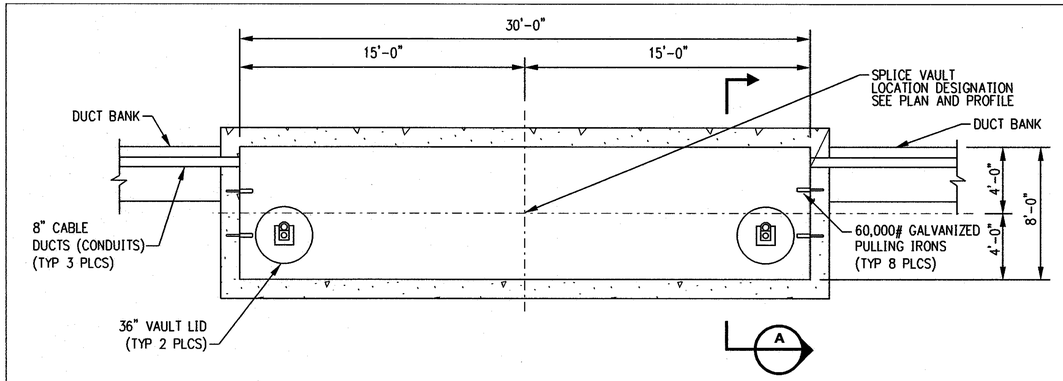

INTERIOR PLAN ELECTRICAL SPLICE VAULT

DETAIL 1
NTS

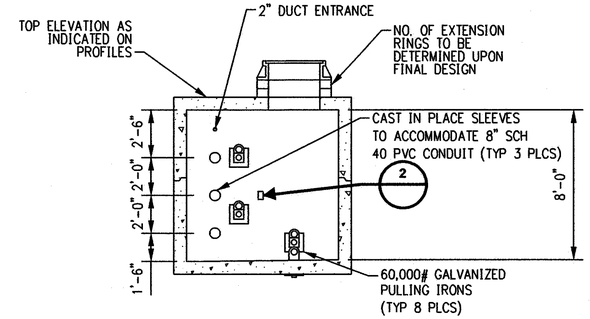

SPLICE VAULT

SECTION A
NTS

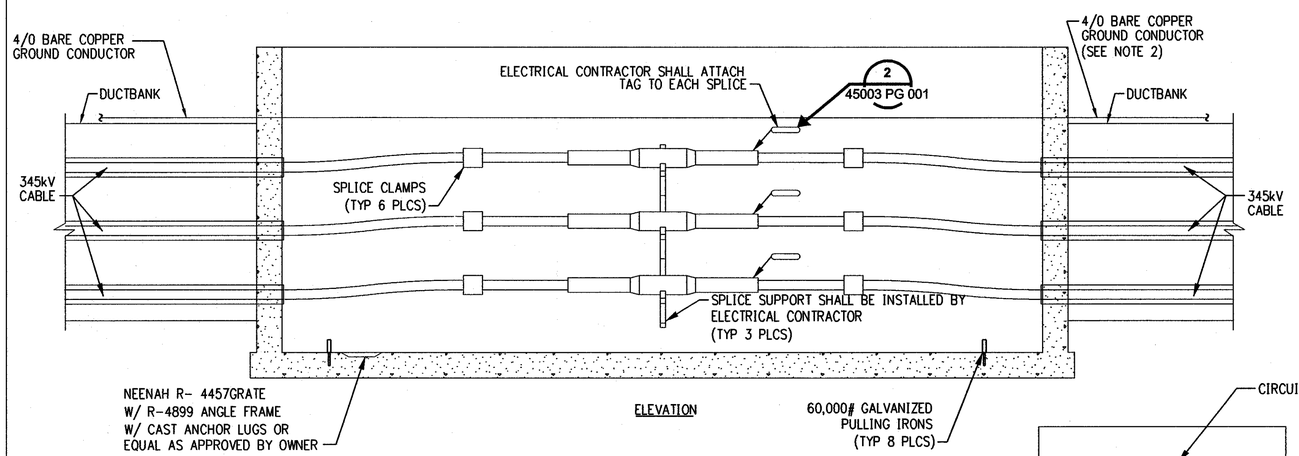

ELEVATION

SPLICE VAULT

DETAIL 3
NTS

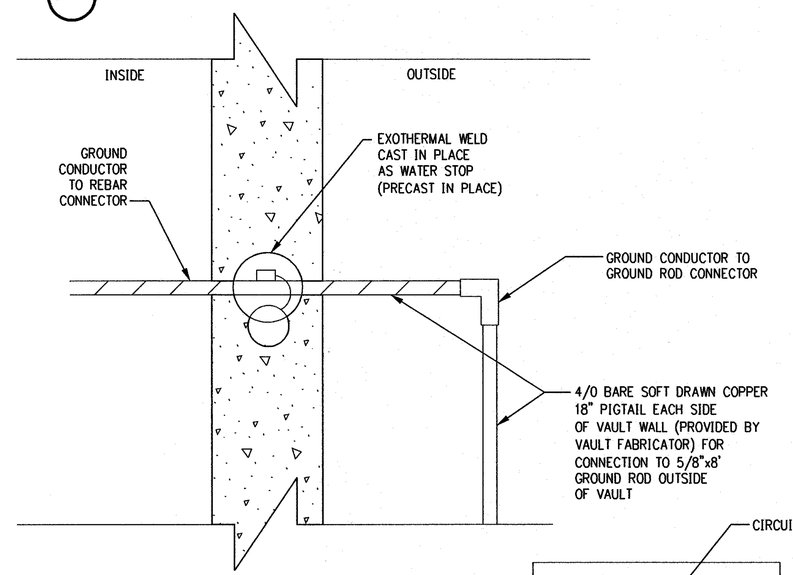

GROUND WIRE DETAIL
PROFILE VIEW

DETAIL 4
NTS

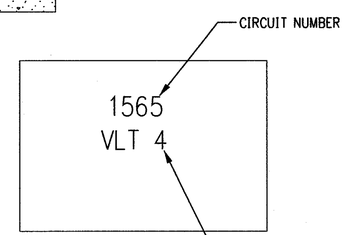

PROFILE VIEW

DETAIL 5
NTS

CIVIL CONTRACTOR SHALL ATTACH TAG 1'-6" BELOW FINISHED GRADE ON THE INSIDE OF THE EXTENSION RINGS AND ON THE VAULT WALL OPPOSITE THE RACKING

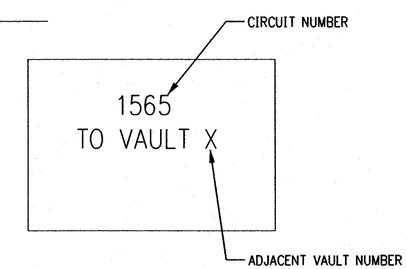

PROFILE VIEW

DETAIL 2
NTS

CIVIL CONTRACTOR SHALL ATTACH TAG TO EACH ENDWALL DESIGNATING NEXT ADJACENT VAULT IN CIRCUIT

NOTES:

1. PASS GROUND CONDUCTOR THROUGH VAULT WALL AND SUPPORT ALONG VAULT WALL.
2. BOND GROUNDS FROM EARTHING TO VAULT/ DUCTBANK GROUND.

STATE OF CONNECTICUT SCOTT E. NEWLAND No. 24675 LICENSED PROFESSIONAL ENGINEER
8/29/06

ISSUED FOR CONSTRUCTION

DOCKET No. 272

no.	date	revisions	by	chk
1	8/29/06	ISSUED FOR CONSTRUCTION	CTC	

Burns & McDonnell SINCE 1898

date 8/15/05 | detailed L. ROWSE
designed C. COURTRIGHT | checked S. NEWLAND

MF	NO.	DATE	REVISIONS	BY	CHK	APP	APP

NORTHEAST UTILITIES SERVICE CO.

FOR THE CONNECTICUT LIGHT & POWER COMPANY

TITLE MIDDLETOWN–NORWALK 345kV TRANSMISSION PROJECT

VAULT AND GROUNDING DETAILS

BY SEN–BMCD	CHKD	APP	APP
DATE 8–15–05	DATE	DATE	DATE
SCALE AS NOTED	D	DWG. NO. 01223–45003 PG 002	

COPYRIGHT © 2006 BURNS & McDONNELL ENGINEERING COMPANY, INC.

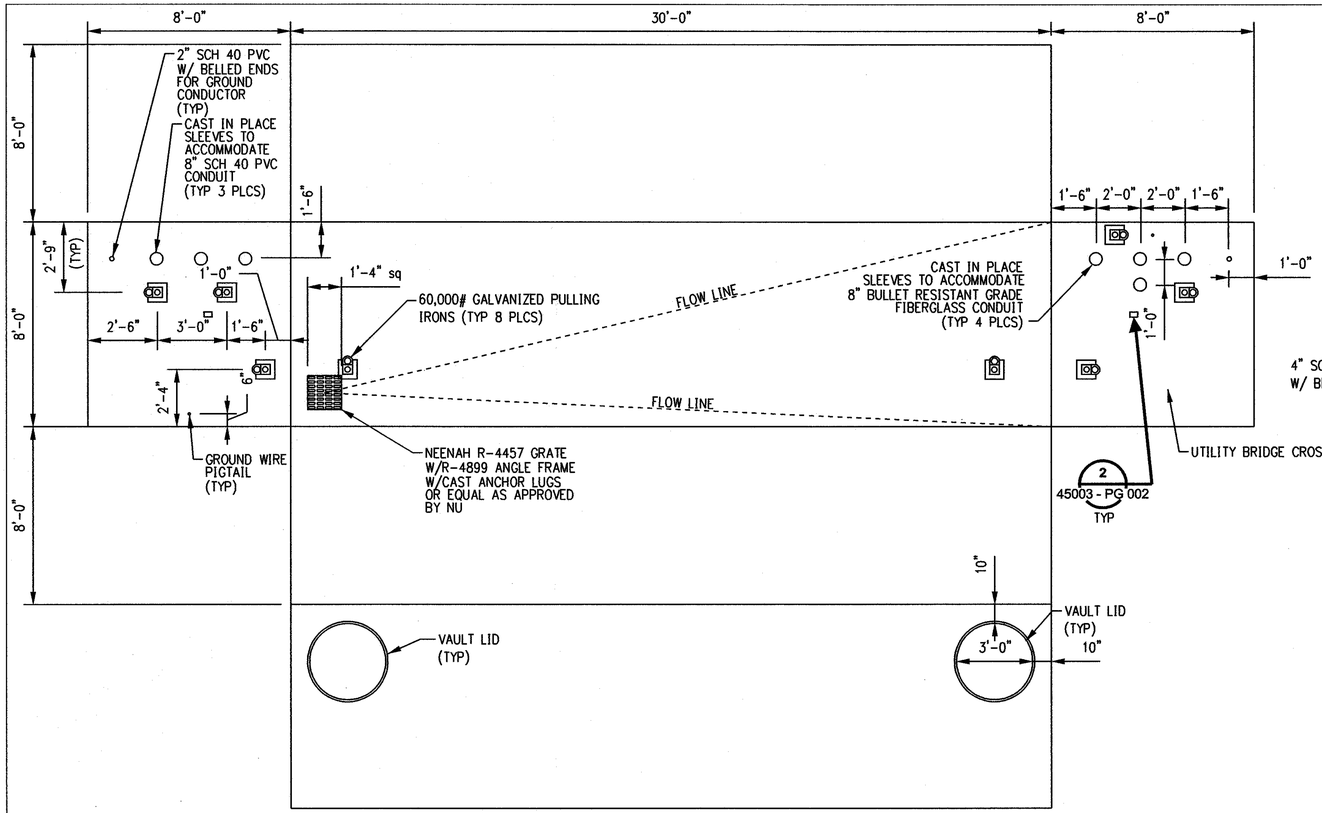

SPLICE VAULT DEVELOPMENT PLAN FOR VAULTS ADJACENT TO UTILITY BRIDGE CROSSINGS

DETAIL 2
NTS

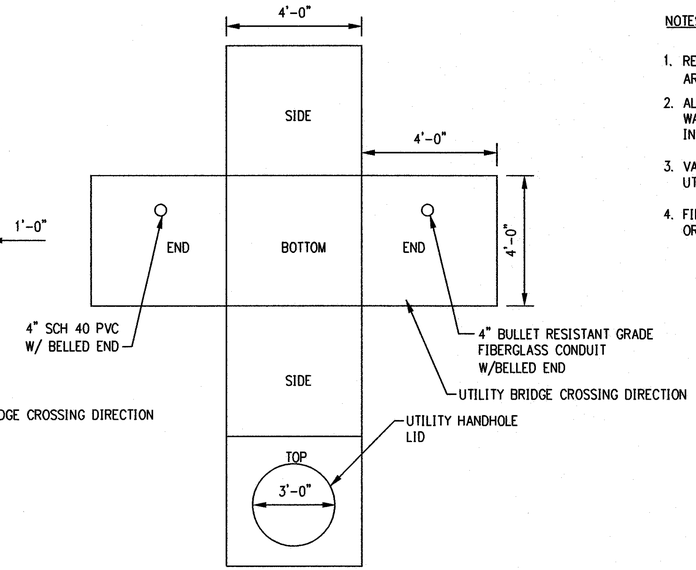

UTILITY BRIDGE FIBER OPTIC HANDHOLE

DETAIL 3
NTS

NOTES:

1. REBAR WITHIN SPLICE CHAMBER WALLS SHALL NOT FORM A LOOP AROUND ANY 8" CONDUIT OPENING.
2. ALL UNUSED CONDUITS SHALL BE PLUGGED AND SEALED USING WATERTIGHT DUCT PLUGS AS MANUFACTURED BY JACKMOON USA, INC. OR ACCEPTABLE EQUAL.
3. VAULT ENDS HAVING FIBERGLASS SPARE DUCTS ARE ORIENTED TOWARD UTILTITY BRIDGES.
4. FIBER OPTIC HANDHOLES HAVING FIBERGLASS BELLED ENDS SHALL BE ORIENTED TOWARD THE UTILITY BRIDGE.

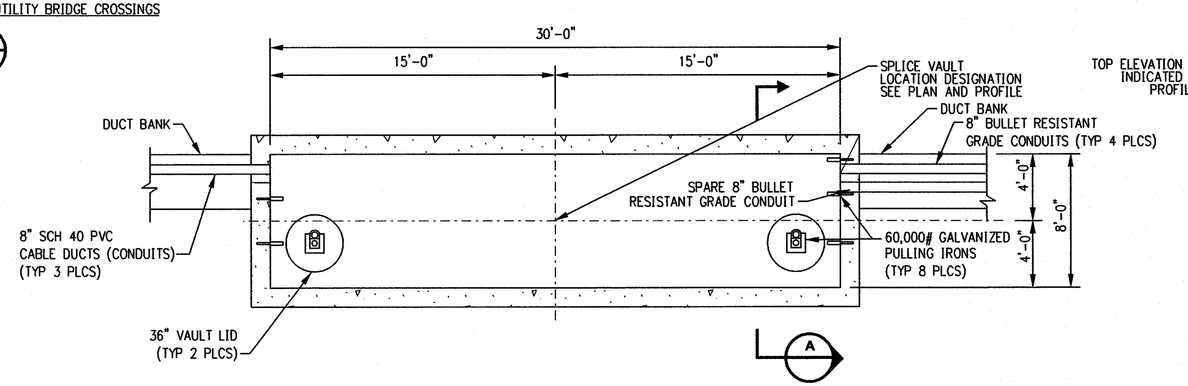

INTERIOR PLAN OF ELECTRICAL SPLICE VAULTS ADJACENT TO UTILITY BRIDGE CROSSINGS

DETAIL 1
NTS

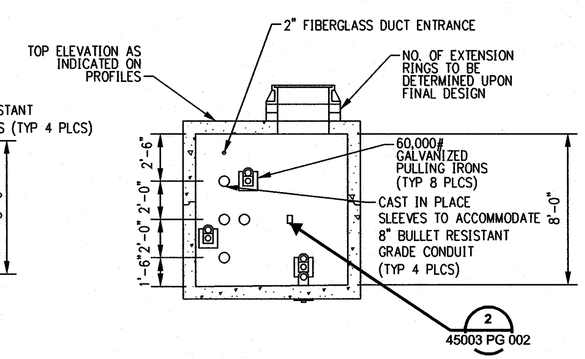

UTILITY BRIDGE SPLICE VAULT

SECTION A
NTS

COPYRIGHT © 2006 BURNS & McDONNELL ENGINEERING COMPANY, INC.

STATE OF CONNECTICUT SCOTT E. NEWLAND No. 24675 LICENSED PROFESSIONAL ENGINEER
8/29/06

ISSUED FOR CONSTRUCTION

DOCKET No. 272

no.	date	revisions	by	chk
1	8/29/06	ISSUED FOR CONSTRUCTION	CTC	

Burns & McDonnell SINCE 1898

date 05/05/06	detailed L. ROWSE
designed C. COURTRIGHT	checked S. NEWLAND

MF	NO.	DATE	REVISIONS	BY	CHK	APP	APP

NORTHEAST UTILITIES SERVICE CO.

FOR THE CONNECTICUT LIGHT & POWER COMPANY

TITLE MIDDLETOWN–NORWALK 345kV TRANSMISSION PROJECT

UTILITY BRIDGE SPLICE VAULT DETAILS

BY SEN-BMCD	CHKD	APP	APP
DATE 5-05-06	DATE	DATE	DATE
SCALE AS NOTED	D	DWG. NO. 01223–45003 PG 003	

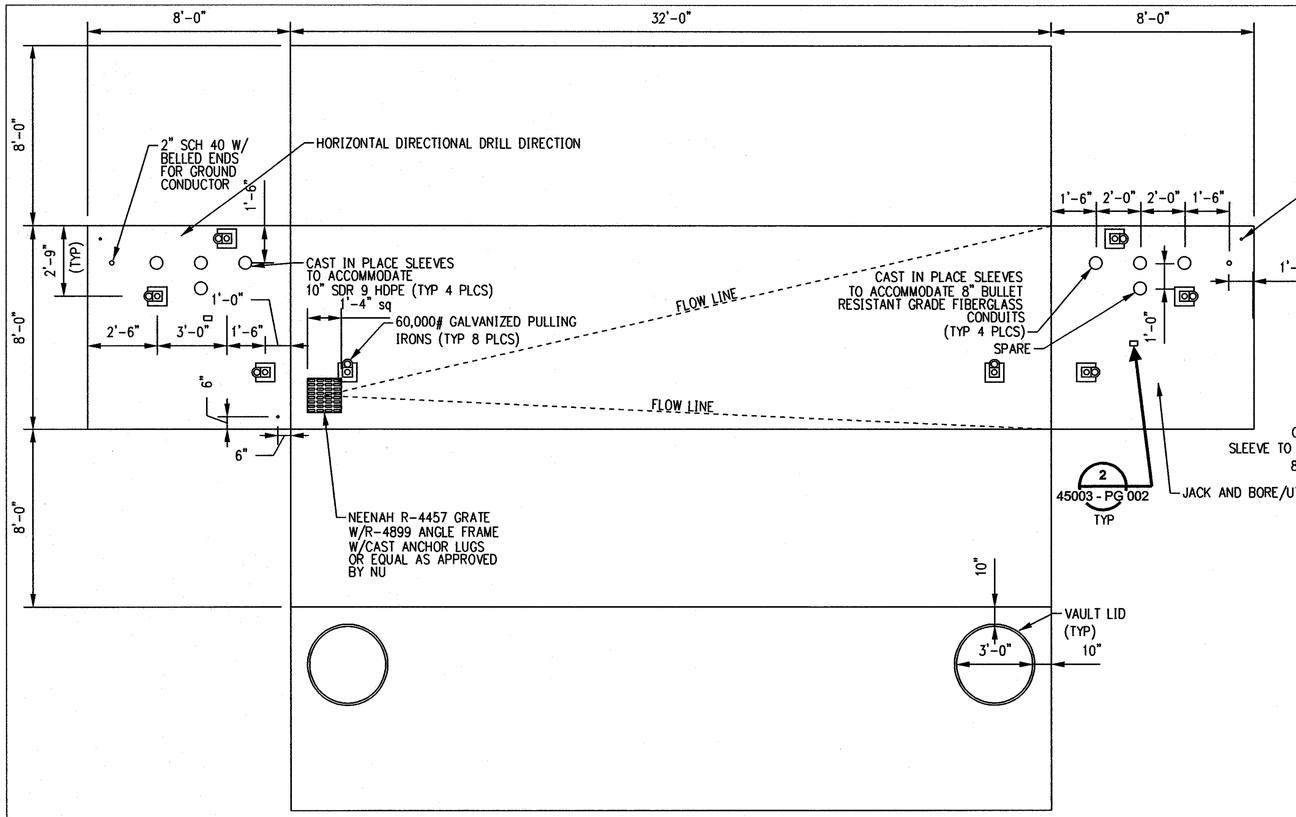

SPLICE VAULT DEVELOPMENT PLAN FOR VAULTS ADJACENT TO HORIZONTAL DIRECTIONAL DRILL/JACK AND BORE-UTILITY BRIDGE CROSSINGS

DETAIL 2
NTS

NOTES:

1. REBAR WITHIN SPLICE CHAMBER WALLS SHALL NOT FORM A LOOP AROUND ANY 8" AND 10" CONDUIT OPENING.
2. ALL UNUSED CONDUITS SHALL BE PLUGGED AND SEALED USING WATERTIGHT DUCT PLUGS AS MANUFACTURED BY JACKMOON USA, INC. OR ACCEPTABLE EQUAL.
3. VAULT ENDS HAVING SPARE DUCTS ARE ORIENTED TOWARD TRENCHLESS CROSSINGS. (JACK AND BORES, UTILTITY BRIDGES, OR HORIZONTAL DIRECTIONAL DRILLS)

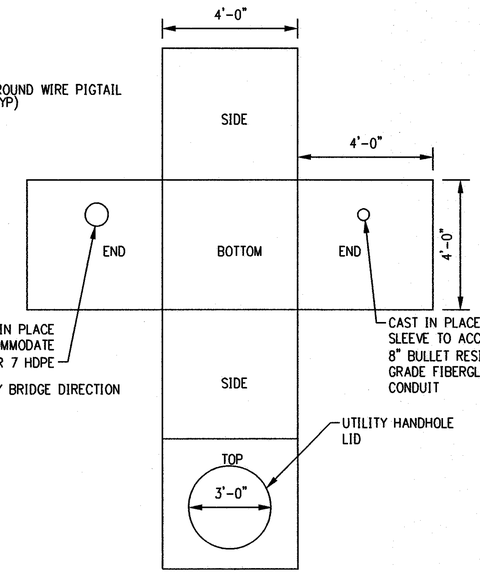

HORIZONTAL DIRECTIONAL DRILL/JACK AND BORE-UTILITY BRIDGE FIBER OPTIC HANDHOLE

DETAIL 3
NTS

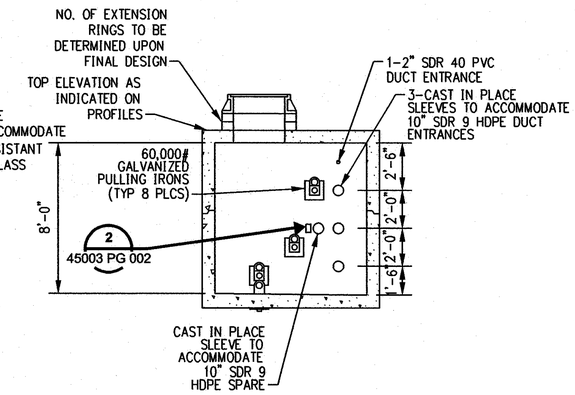

HORIZONTAL DIRECTIONAL DRILL/JACK AND BORE-UTILITY BRIDGE SPLICE VAULT

SECTION A
NTS
45003 PG 004

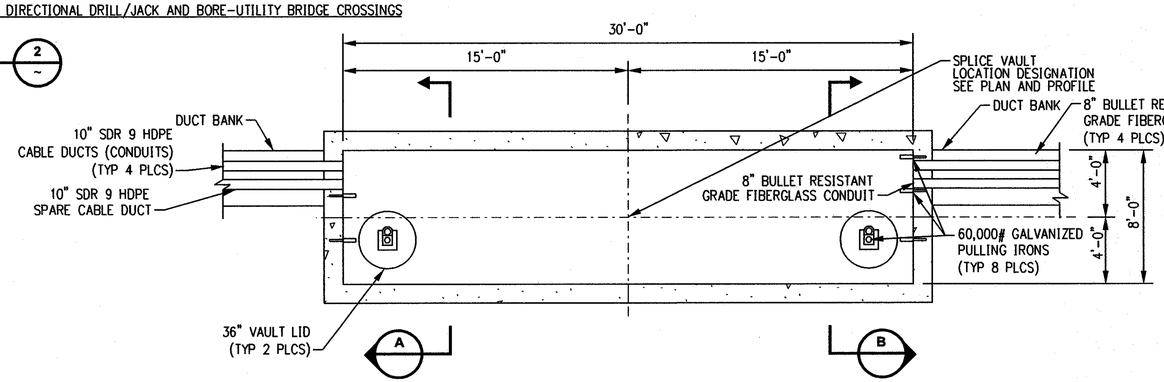

INTERIOR PLAN FOR ELECTRICAL SPLICE VAULTS ADJACENT TO HORIZONTAL DIRECTIONAL DRILL/ JACK AND BORE-UTILITY BRIDGE CROSSINGS

DETAIL 1
NTS

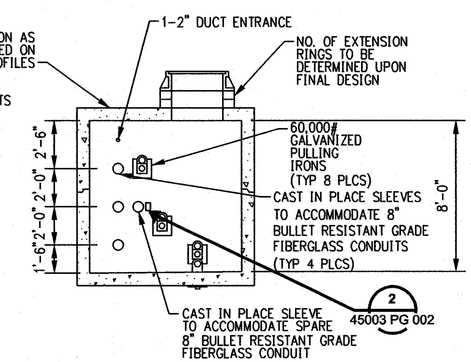

HORIZONTAL DIRECTIONAL DRILL/ JACK AND BORE-UTILITY BRIDGE SPLICE VAULT

SECTION B
NTS
45003 PG 004

STATE OF CONNECTICUT SCOTT E. NEWLAND No. 24675 LICENSED PROFESSIONAL ENGINEER
8/29/06

ISSUED FOR CONSTRUCTION

DOCKET No. 272

no.	date	revisions	by	chk
1	8/29/06	ISSUED FOR CONSTRUCTION	CTC	

Burns & McDonnell SINCE 1898

date 05/05/06 | detailed L. ROWSE
designed C. COURTRIGHT | checked S. NEWLAND

MF	NO.	DATE	REVISIONS	BY	CHK	APP	APP

NORTHEAST UTILITIES SERVICE CO.

FOR THE CONNECTICUT LIGHT & POWER COMPANY

TITLE MIDDLETOWN-NORWALK 345kV TRANSMISSION PROJECT

HORIZONTAL DIRECTIONAL DRILL SPLICE VAULT DETAILS

BY SEN-BMCD	CHKD	APP	APP
DATE 5-05-06	DATE	DATE	DATE
SCALE AS NOTED	D	DWG. NO. 01223-45003 PG 004	

COPYRIGHT © 2006 BURNS & McDONNELL ENGINEERING COMPANY, INC.

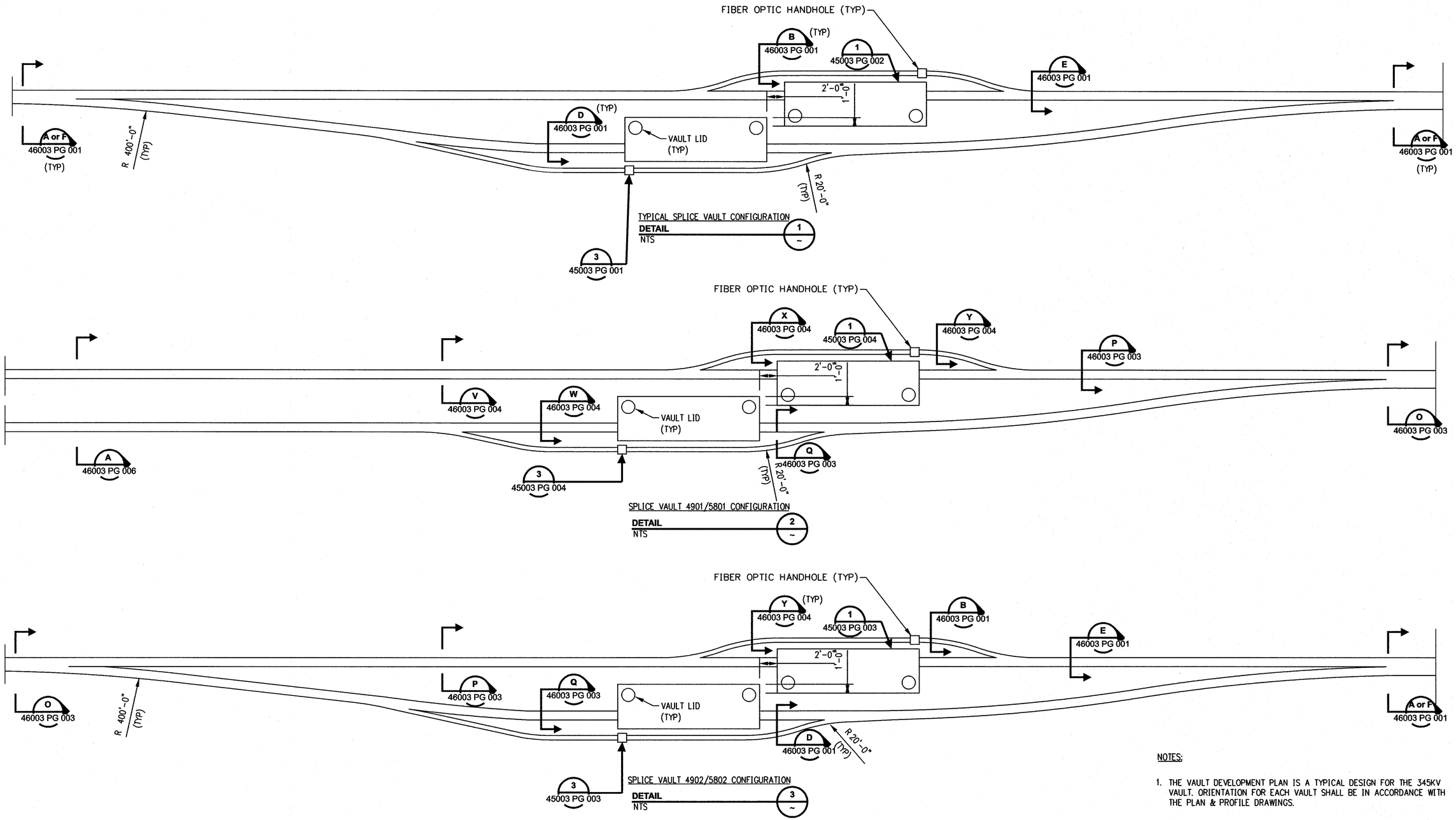

NOTES:

1. THE VAULT DEVELOPMENT PLAN IS A TYPICAL DESIGN FOR THE 345KV VAULT. ORIENTATION FOR EACH VAULT SHALL BE IN ACCORDANCE WITH THE PLAN & PROFILE DRAWINGS.

STATE OF CONNECTICUT
SCOTT E. NEWLAND
No. 24675
LICENSED PROFESSIONAL ENGINEER
8/29/06

ISSUED FOR CONSTRUCTION

DOCKET No. 272

no.	date	revisions	by	chk
1	8/29/06	ISSUED FOR CONSTRUCTION	CTC	

Burns & McDonnell SINCE 1898

date	detailed
06/15/06	L. ROWSE
designed	checked
C. COURTRIGHT	S. NEWLAND

MF	NO.	DATE	REVISIONS	BY	CHK	APP	APP

NORTHEAST UTILITIES SERVICE CO.

FOR THE CONNECTICUT LIGHT & POWER COMPANY

TITLE MIDDLETOWN–NORWALK 345kV TRANSMISSION PROJECT

CROSSING SPLICE VAULT DETAILS

BY SEN–BMCD	CHKD	APP	APP
DATE 6–15–06	DATE	DATE	DATE
SCALE AS NOTED	D	DWG. NO. 01223–45003 PG 005	

COPYRIGHT © 2006 BURNS & McDONNELL ENGINEERING COMPANY, INC.

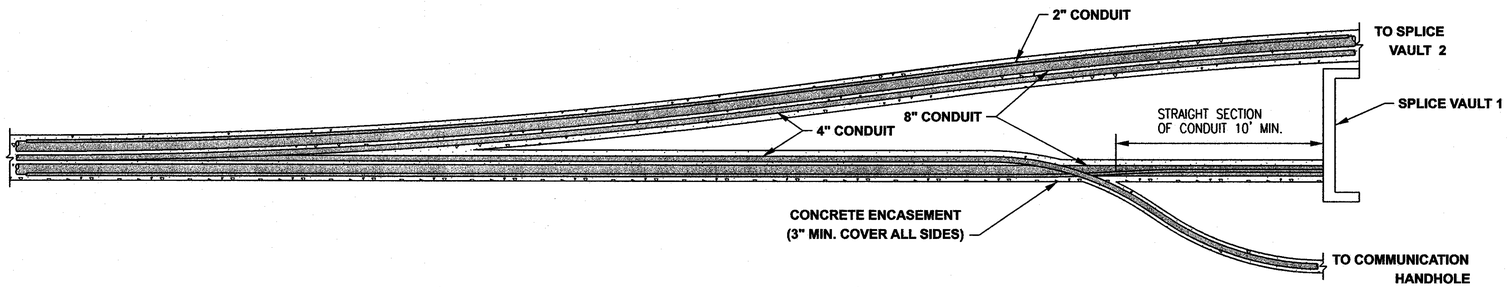

PLAN

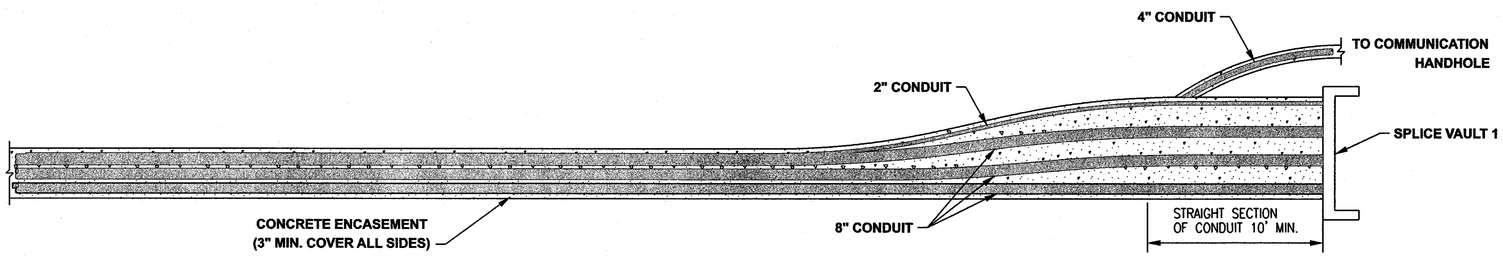

PROFILE

DUCT BANK CONDUIT TRANSITION

DETAIL 1

STATE OF CONNECTICUT
SCOTT E. NEWLAND
No. 24675
LICENSED
PROFESSIONAL ENGINEER
8/29/06

ISSUED FOR CONSTRUCTION

DOCKET No. 272

no.	date	revisions	by	chk
1	8/29/06	ISSUED FOR CONSTRUCTION	CTC	

Burns & McDonnell SINCE 1898

date 07/05/06 | detailed L. ROWSE

designed C. COURTRIGHT | checked S. NEWLAND

MF	NO.	DATE	REVISIONS	BY	CHK	APP	APP

NORTHEAST UTILITIES SERVICE CO.

FOR THE CONNECTICUT LIGHT & POWER COMPANY

TITLE MIDDLETOWN–NORWALK 345kV TRANSMISSION PROJECT

CONDUIT TRANSITIONS

BY SEN-BMCD	CHKD	APP	APP
DATE 7-05-06	DATE	DATE	DATE
SCALE AS NOTED	D	DWG. NO. 01223-45003 PG 006	

COPYRIGHT © 2006 BURNS & McDONNELL ENGINEERING COMPANY, INC.

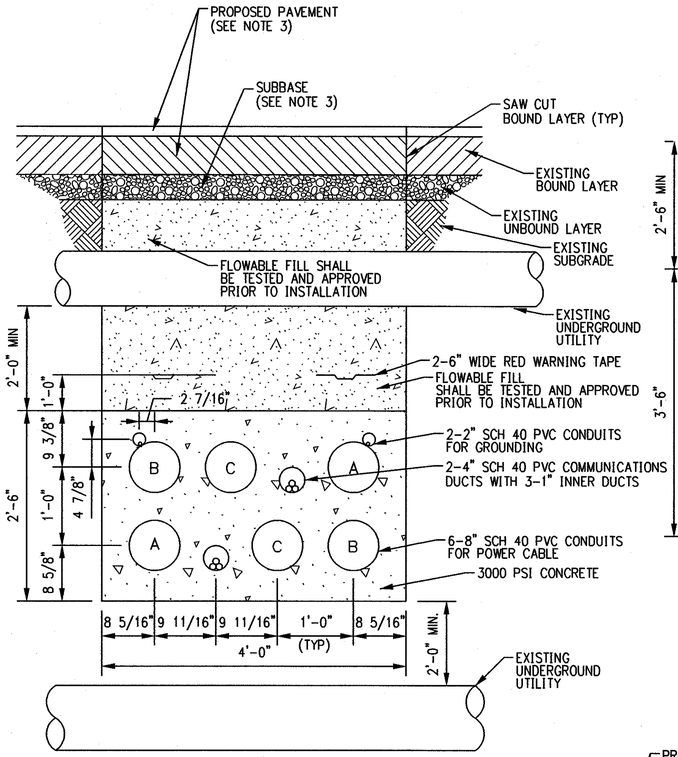

DUCT BANK CONFIGURATION WITH UTILITY CLEARANCE

DETAIL 1
NTS

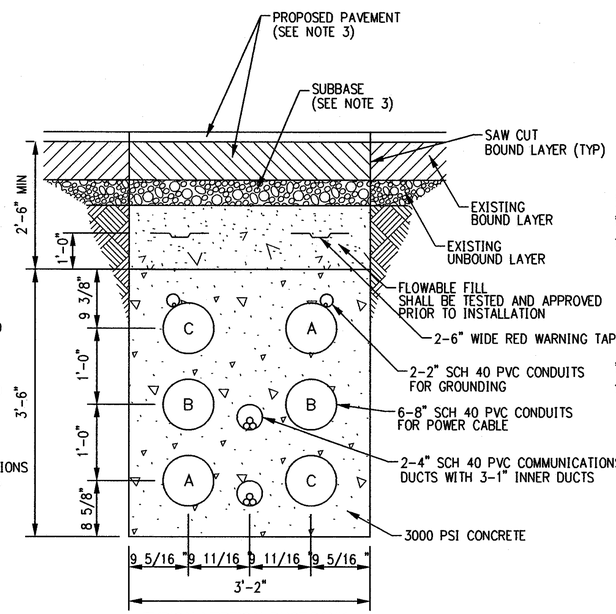

TYPICAL VERTICAL DUCT BANK

SECTION F
NTS

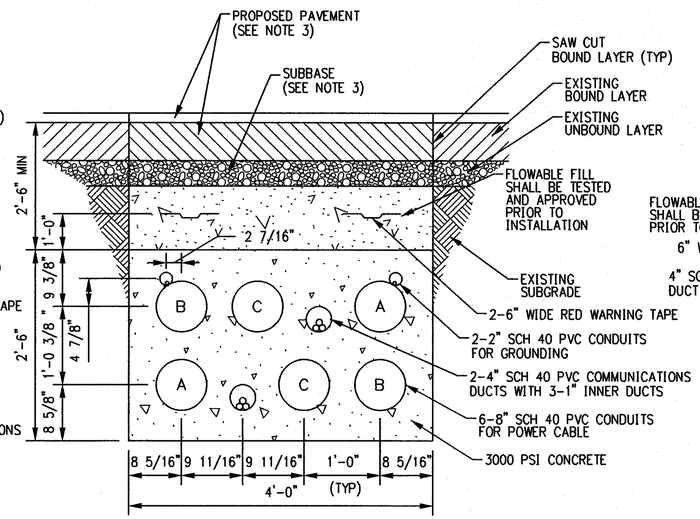

TYPICAL HORIZONTAL DUCT BANK

SECTION A
NTS

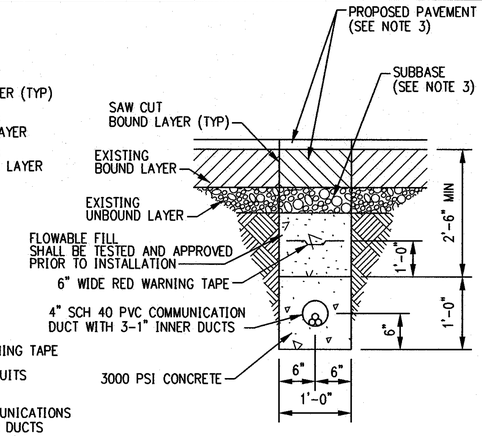

TYPICAL COMMUNICATIONS DUCT BANK

SECTION B
NTS

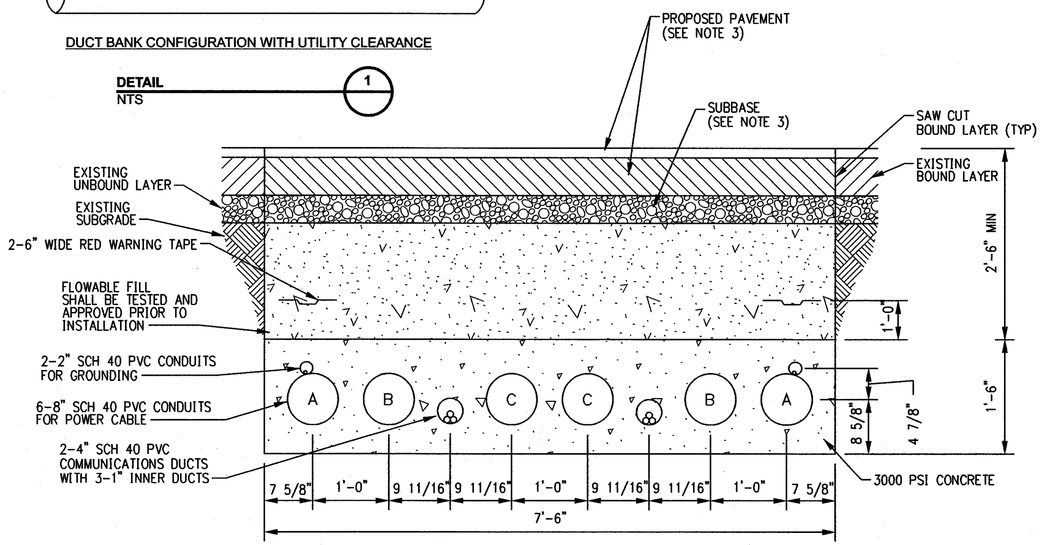

REDUCED-HEIGHT DUCT BANK

SECTION C
NTS

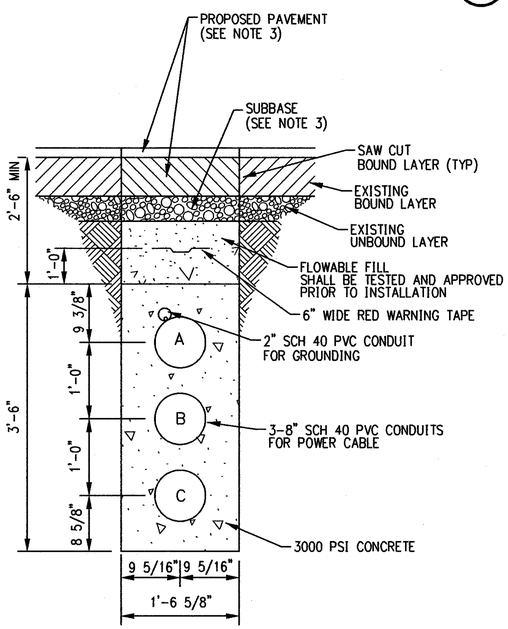

SINGLE CIRCUIT DUCT BANK

SECTION D
NTS

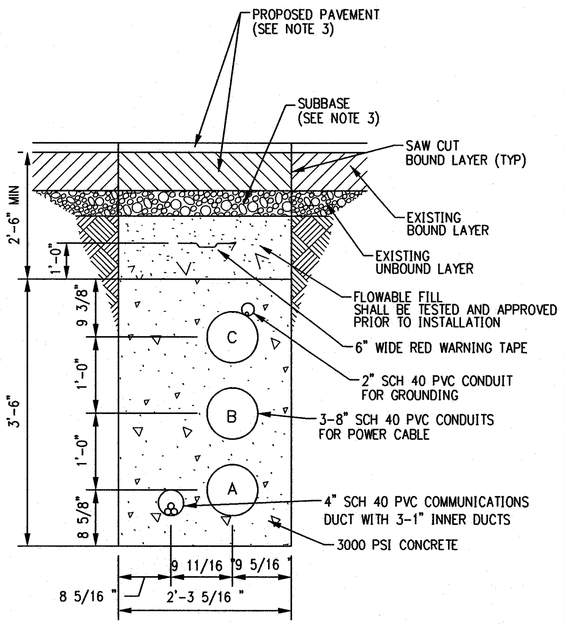

SINGLE CIRCUIT WITH COMMUNICATIONS DUCT BANK

SECTION E
NTS

GENERAL NOTES:

1. STANDARD TRENCH WITH PERMANENT PAVEMENT RESTORATION IN STATE HIGHWAY SHOWN. PAVEMENT RESTORATION REQUIREMENTS SHALL VARY DEPENDENT ON SPECIFIC EXISTING PAVEMENT CROSS SECTIONS AND MATERIALS.
2. OMITTED
3. REFERENCE RESTORATION DRAWINGS FOR PROPOSED PAVEMENT SECTIONS.

DOCKET No. 272

STATE OF CONNECTICUT SCOTT E. NEWLAND No. 24675 LICENSED PROFESSIONAL ENGINEER
8/29/06

ISSUED FOR CONSTRUCTION

no.	date	revisions	by	chk
1	8/29/06	ISSUED FOR CONSTRUCTION	CTC	

Burns & McDonnell SINCE 1898

date 10/11/05 | detailed L. ROWSE
designed BL COMPANIES | checked S. NEWLAND

MF	NO.	DATE	REVISIONS	BY	CHK	APP	APP

NORTHEAST UTILITIES SERVICE CO.

FOR THE CONNECTICUT LIGHT & POWER COMPANY

TITLE MIDDLETOWN-NORWALK 345kV TRANSMISSION PROJECT

TYPICAL DUCT BANK DETAILS

BY SEN-BMCD	CHKD	APP	APP
DATE 10-11-05	DATE	DATE	DATE
SCALE AS NOTED	D	DWG. NO. 01223-46003 PG 001	

COPYRIGHT © 2006 BURNS & McDONNELL ENGINEERING COMPANY, INC.

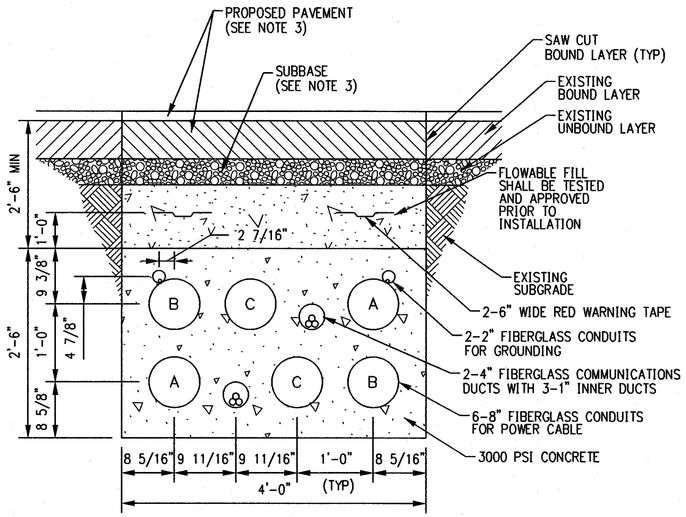

TYPICAL HORIZONTAL UTILITY BRIDGE DUCT BANK

SECTION G
NTS

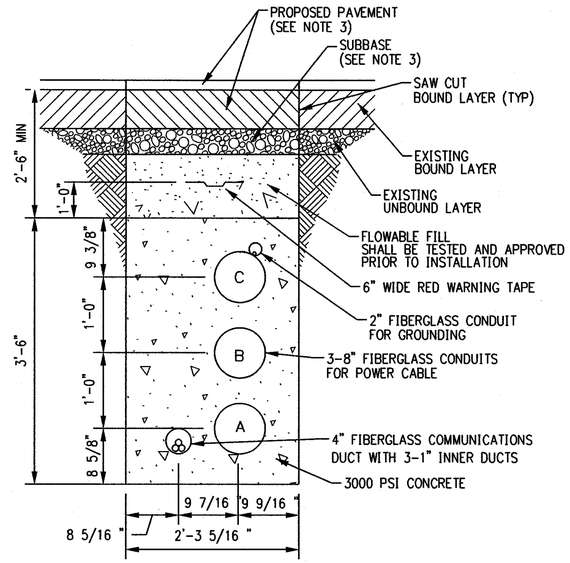

SINGLE CIRCUIT WITH COMMUNICATIONS UTILITY BRIDGE DUCT BANK

SECTION H
NTS

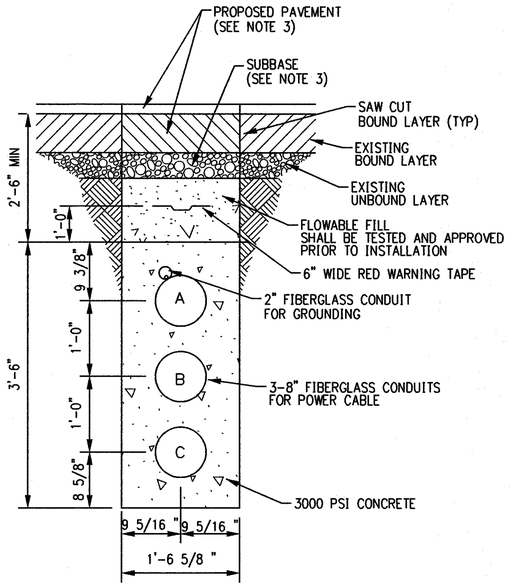

SINGLE CIRCUIT UTILITY BRIDGE DUCT BANK

SECTION J
NTS

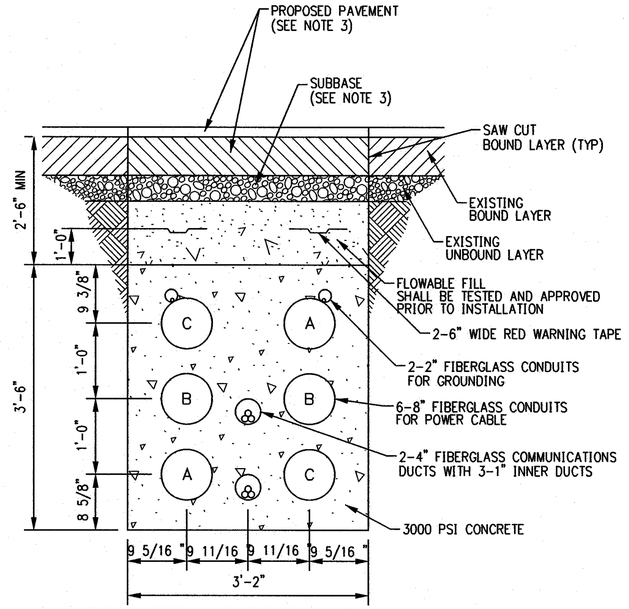

TYPICAL VERTICAL UTILITY BRIDGE DUCT BANK

SECTION K
NTS

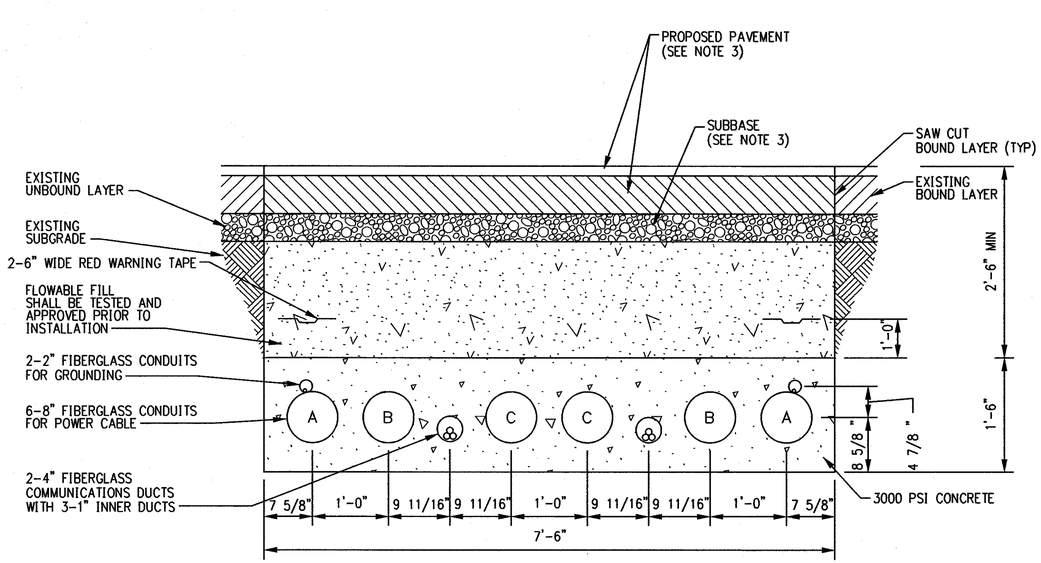

REDUCED-HEIGHT UTILITY BRIDGE DUCT BANK

SECTION L
NTS

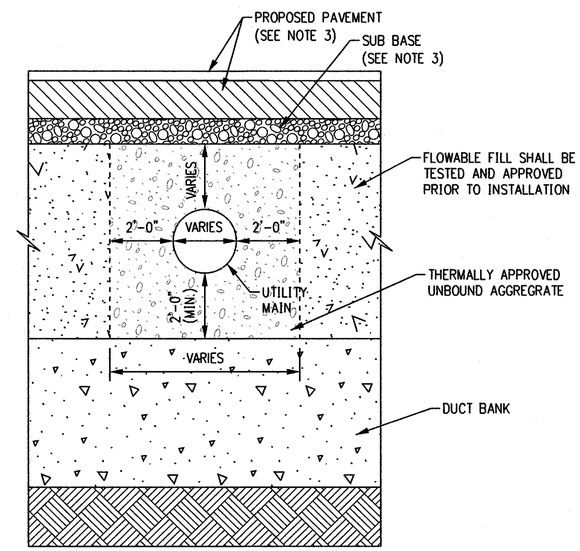

TYPICAL GAS UTILITY CROSSING

SECTION M
NTS

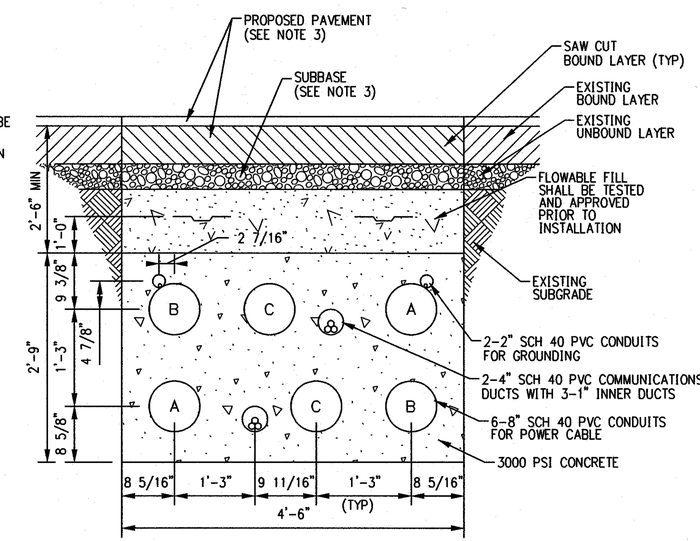

15" PHASE-SPACING DUCT BANK

SECTION N
NTS

GENERAL NOTES:

1. STANDARD TRENCH WITH PERMANENT PAVEMENT RESTORATION IN STATE HIGHWAY SHOWN. PAVEMENT RESTORATION REQUIREMENTS SHALL VARY DEPENDENT ON SPECIFIC EXISTING PAVEMENT CROSS SECTIONS AND MATERIALS.
2. ALL FIBERGLASS CONDUITS SHALL BE OF BULLET-RESISTANT GRADE OR APPROVED OTHER.
3. REFERENCE RESTORATION DRAWINGS FOR PROPOSED PAVEMENT SECTIONS.

STATE OF CONNECTICUT SCOTT E. NEWLAND LICENSED No. 24615 PROFESSIONAL ENGINEER
8/29/06

ISSUED FOR CONSTRUCTION

DOCKET No. 272

no.	date	revisions	by	chk
1	8/29/06	ISSUED FOR CONSTRUCTION	CTC	

Burns & McDonnell SINCE 1898

date 4/15/06 | detailed L. ROWSE
designed C. COURTRIGHT | checked S. NEWLAND

MF	NO.	DATE	REVISIONS	BY	CHK	APP	APP

NORTHEAST UTILITIES SERVICE CO.

FOR THE CONNECTICUT LIGHT & POWER COMPANY

TITLE MIDDLETOWN-NORWALK 345kV TRANSMISSION PROJECT

UTILITY BRIDGE DUCT BANK DETAILS AND UTILITY CROSSING DETAIL

BY SEN-BMCD	CHKD	APP	APP
DATE 4-15-06	DATE	DATE	DATE
SCALE AS NOTED	D	DWG. NO. 01223-46003 PG 002	

COPYRIGHT © 2006 BURNS & McDONNELL ENGINEERING COMPANY, INC.

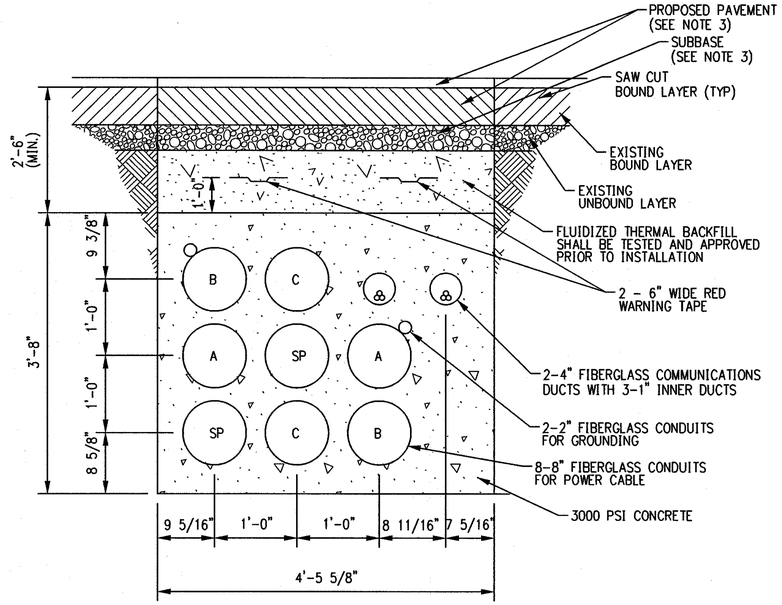

TYPICAL UTILITY BRIDGE DUCT BANK WITH SPARE

SECTION O
NTS

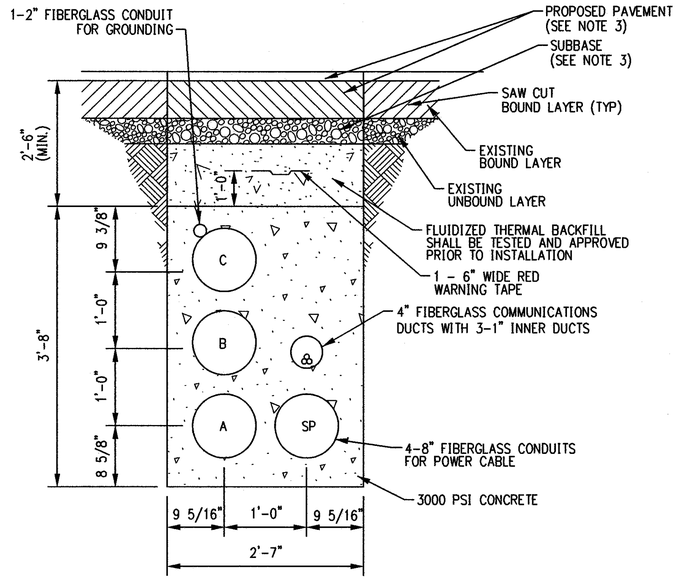

UTILITY BRIDGE SINGLE CIRCUIT WITH COMMUNICATIONS DUCT BANK AND SPARE

SECTION P
NTS

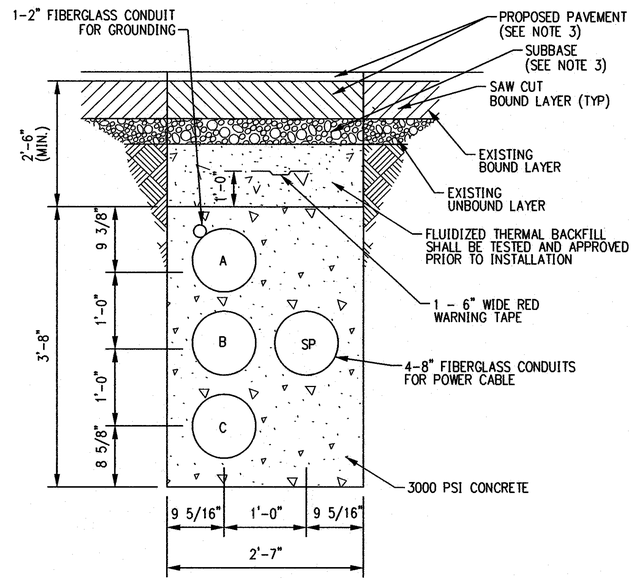

UTILITY BRIDGE SINGLE CIRCUIT DUCT BANK WITH SPARE

SECTION Q
NTS

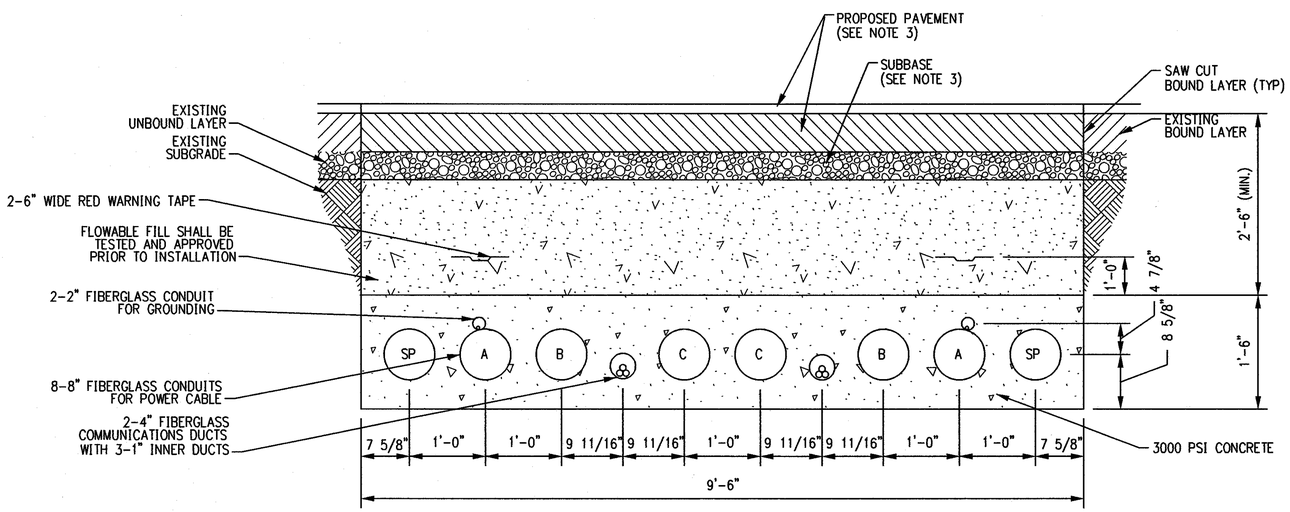

UTILITY BRIDGE REDUCED-HEIGHT DUCT BANK WITH SPARE

SECTION R
NTS

GENERAL NOTES:

1. STANDARD TRENCH WITH PERMANENT PAVEMENT RESTORATION IN STATE HIGHWAY SHOWN. PAVEMENT RESTORATION REQUIREMENTS SHALL VARY DEPENDENT ON SPECIFIC EXISTING PAVEMENT CROSS SECTIONS AND MATERIALS.
2. ALL FIBERGLASS CONDUITS SHALL BE OF BULLET-RESISTANT GRADE OR APPROVED OTHER.
3. REFERENCE RESTORATION DRAWINGS FOR PROPOSED PAVEMENT SECTIONS.

STATE OF CONNECTICUT SCOTT E. NEWLAND No. 24675 LICENSED PROFESSIONAL ENGINEER
8/29/06

DOCKET No. 272

ISSUED FOR CONSTRUCTION

no.	date	revisions	by	chk
1	8/29/06	ISSUED FOR CONSTRUCTION	CTC	

Burns & McDonnell SINCE 1898

date 4/15/06	detailed L. ROWSE
designed C. COURTRIGHT	checked S. NEWLAND

MF	NO.	DATE	REVISIONS	BY	CHK	APP	APP

NORTHEAST UTILITIES SERVICE CO.

FOR THE CONNECTICUT LIGHT & POWER COMPANY

TITLE MIDDLETOWN-NORWALK 345kV TRANSMISSION PROJECT
UTILITY BRIDGE DUCT BANK DETAILS

BY SEN-BMCD	CHKD	APP	APP
DATE 4-15-06	DATE	DATE	DATE
SCALE AS NOTED	D	DWG. NO. 01223-46003 PG 003	

COPYRIGHT © 2006 BURNS & McDONNELL ENGINEERING COMPANY, INC.

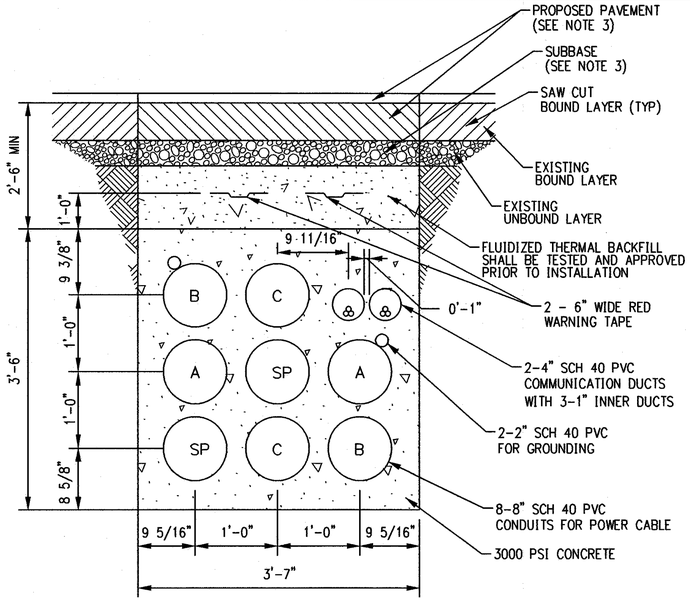

TYPICAL JACK AND BORE DUCT BANK

SECTION S
NTS

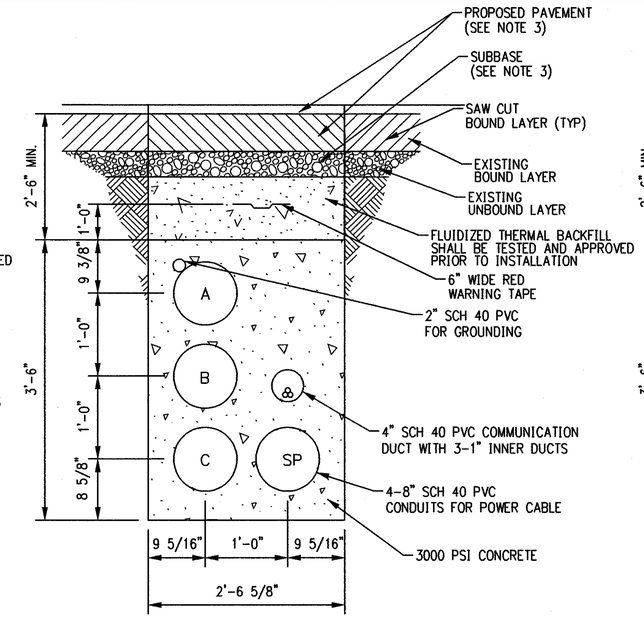

JACK AND BORE SINGLE CIRCUIT WITH COMMUNICATIONS DUCT BANK

SECTION T
NTS

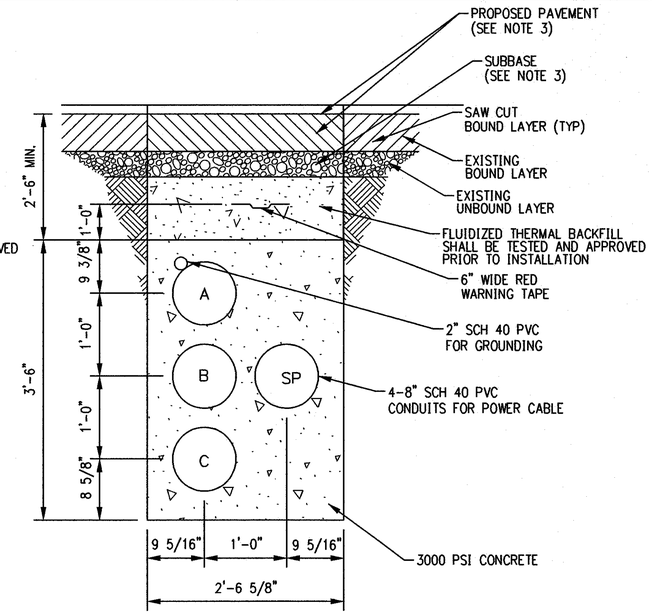

JACK AND BORE SINGLE CIRCUIT DUCT BANK

SECTION U
NTS

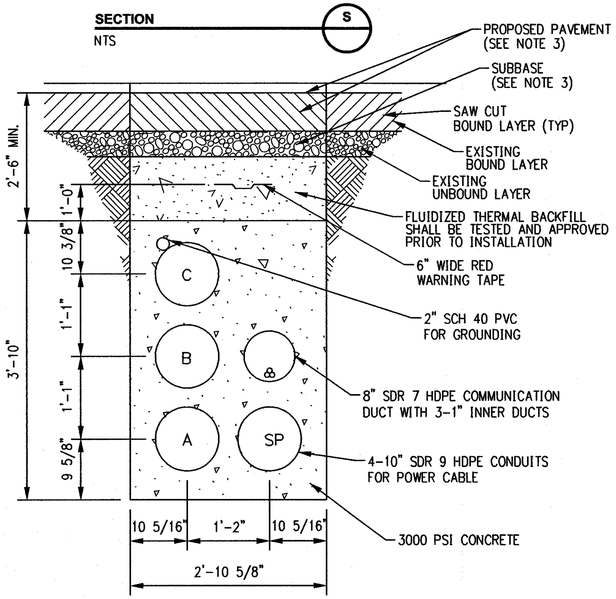

HORIZONTAL DIRECTIONAL DRILL SINGLE CIRCUIT WITH COMMUNICATIONS DUCT BANK

SECTION V
NTS

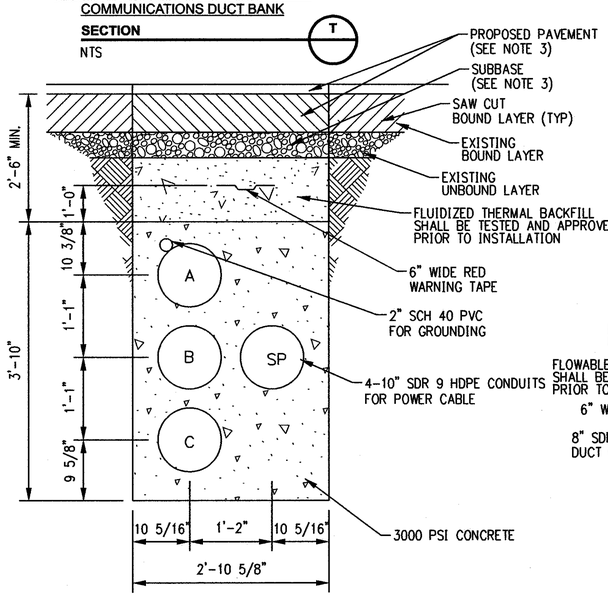

HORIZONTAL DIRECTIONAL DRILL SINGLE CIRCUIT DUCT BANK

SECTION W
NTS

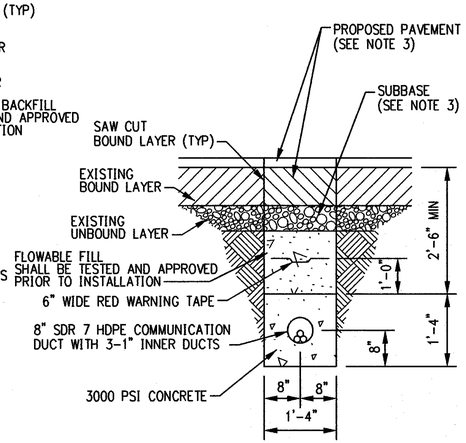

HORIZONTAL DIRECTIONAL DRILL COMMUNICATIONS DUCT BANK

SECTION X
NTS

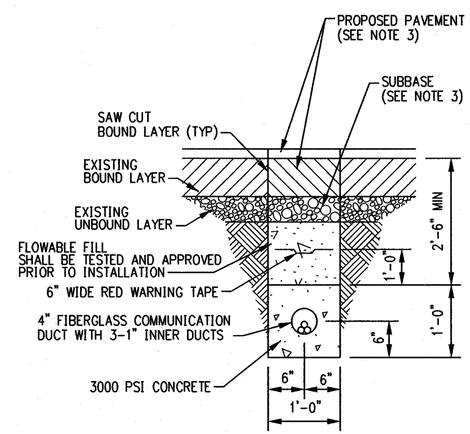

UTILITY BRIDGE COMMUNICATIONS DUCT BANK

SECTION Y
NTS

GENERAL NOTES:

1. STANDARD TRENCH WITH PERMANENT PAVEMENT RESTORATION IN STATE HIGHWAY SHOWN. PAVEMENT RESTORATION REQUIREMENTS SHALL VARY DEPENDENT ON SPECIFIC EXISTING PAVEMENT CROSS SECTIONS AND MATERIALS.
2. ALL FIBERGLASS CONDUITS SHALL BE OF BULLET-RESISTANT GRADE OR APPROVED OTHER.
3. REFERENCE RESTORATION DRAWINGS FOR PROPOSED PAVEMENT SECTIONS.

STATE OF CONNECTICUT SCOTT E. NEWLAND No. 24675 LICENSED PROFESSIONAL ENGINEER
8/29/06

ISSUED FOR CONSTRUCTION

DOCKET No. 272

no.	date	revisions	by	chk
1	8/29/06	ISSUED FOR CONSTRUCTION	CTC	

Burns & McDonnell SINCE 1898

date 4/15/06
detailed L. ROWSE
designed C. COURTRIGHT
checked S. NEWLAND

MF	NO.	DATE	REVISIONS	BY	CHK	APP	APP

NORTHEAST UTILITIES SERVICE CO.

FOR THE CONNECTICUT LIGHT & POWER COMPANY

TITLE MIDDLETOWN-NORWALK 345kV TRANSMISSION PROJECT
JACK AND BORE AND HORIZONTAL DIRECTIONAL DRILL DUCT BANK DETAILS

BY SEN-BMCD	CHKD	APP	APP
DATE 4-15-06	DATE	DATE	DATE
SCALE AS NOTED	D	DWG. NO. 01223-46003 PG 004	

COPYRIGHT © 2006 BURNS & McDONNELL ENGINEERING COMPANY, INC.

Cable Pulling Direction and Tension

Middletown-Norwalk 345-kV Transmission Line Project
Segment 3
Milford, Connecticut

Cable Pulling Direction From Vault	To Vault	Calculated Tension (lb.)	Calculated Maximum Side Wall Pressure (lb/ft.)
SC18 (UI Portion)	1	14,900	70
2	1	19,600	280
2	3	13,200	70
4	3	11,900	30
5	4	12,600	120
6	5	15,900	160
7	6	11,400	110
7	East Devon S/S	8,574	25

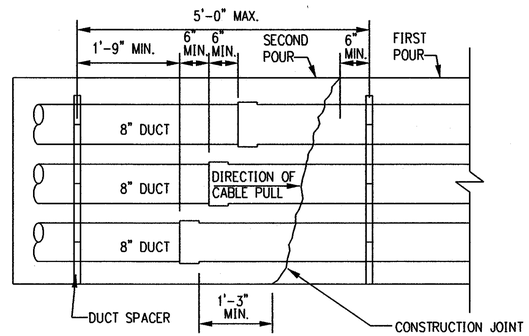

CONSTRUCTION JOINT DETAIL

DETAIL 1
NTS

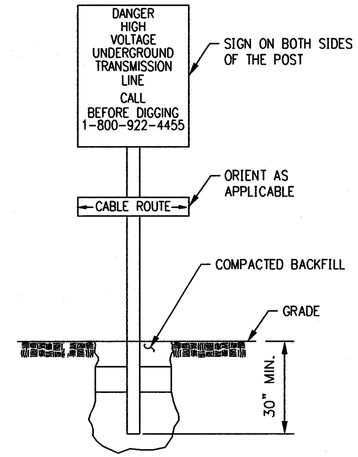

TYPICAL WARNING SIGN

DETAIL 2
NTS

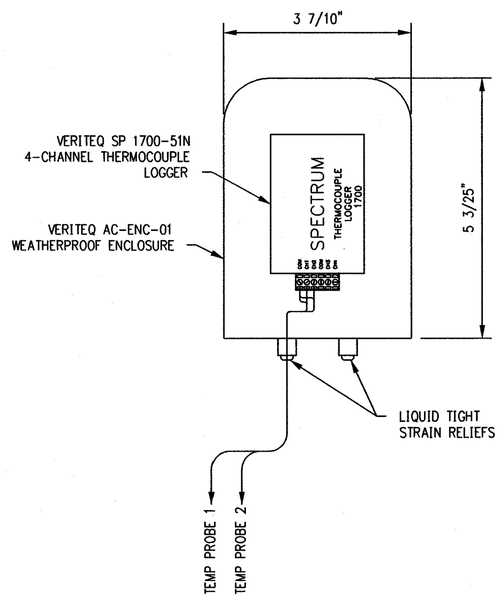

THERMOCOUPLE TEMPERATURE DATA LOGGER

DETAIL 4
NTS

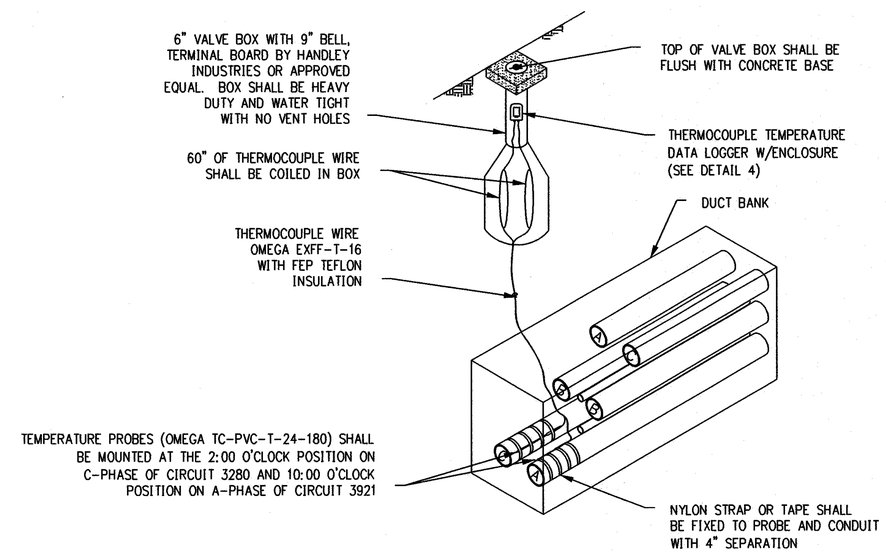

TEMPERATURE MONITORING STATION INSTALLATION

DETAIL 5
NTS

TEMPERATURE MONITORING STATION TABLE

TMS #'S	CENTER OF TMS
TMS #1	N 635,805.2937 E 902,023.4409
TMS #2	N 637,115.6960 E 902,405.3252
TMS #3	N 638,747.1784 E 902,412.4686
TMS #4	N 640,049.9964 E 902,759.6060
TMS #5	N 641,471.2471 E 903,266.6231
TMS #6	N 642,260.5161 E 904,223.2260
TMS #7	N 643,280.0469 E 904,329.8339

STATE OF CONNECTICUT
SCOTT E. NEWLAND
No. 24675
LICENSED
PROFESSIONAL ENGINEER
8/29/06

ISSUED FOR CONSTRUCTION

DOCKET No. 272

no.	date	revisions	by	chk
1	8/29/06	ISSUED FOR CONSTRUCTION	CTC	

Burns & McDonnell
SINCE 1898

date 11/09/05
detailed L. ROWSE
designed C. COURTRIGHT
checked S. NEWLAND

MF	NO.	DATE	REVISIONS	BY	CHK	APP	APP

NORTHEAST UTILITIES SERVICE CO.

FOR THE CONNECTICUT LIGHT & POWER COMPANY

TITLE MIDDLETOWN-NORWALK 345kV TRANSMISSION PROJECT

CABLE AND TEMPERATURE MONITORING DETAILS

BY SEN-BMCD	CHKD	APP	APP
DATE 11-09-05	DATE	DATE	DATE
SCALE AS NOTED	D	DWG. NO. 01223-46003 PG 005	

COPYRIGHT © 2006 BURNS & McDONNELL ENGINEERING COMPANY, INC.

MINIMUM DISTANCE BETWEEN CONDUITS	
CONDUIT SIZE	MIN. DISTANCE
2 & 8	3.000
4 & 4	2.500
4 & 8	3.000
8 & 8	3.000

CTR-TO-CTR DISTANCE BETWEEN CONDUITS	
CONDUIT SIZE	MIN. DISTANCE
2 & 8	8.817
4 & 4	7.152
4 & 8	9.834
8 & 8	12.000

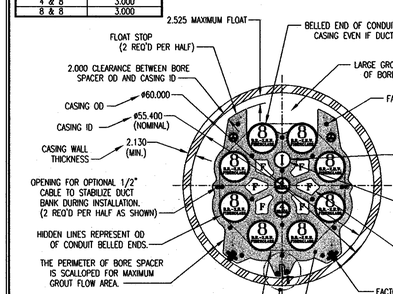

NOTES:
1. USE ONE BORE SPACER FOR EVERY 5 FEET OF DUCT BANK.
2. THE CASING ID MUST BE SMOOTH AND FREE FROM RIDGES, PROJECTIONS AND SEAMS THAT MIGHT IMPEDE THE ROLLING OF WHEELS.
3. A TROUGH OR FEEDER BRIDGE SHOULD BE CONSTRUCTED AT THE LEADING END OF THE CASING TO SUPPORT SECTIONS OF DUCT BANK AS THEY ARE ASSEMBLED AND PULLED INTO THE CASING.
4. THIS BORE SPACER IS DESIGNED FOR A CASING THAT IS STRAIGHT AND TRUE.
5. IT IS POSSIBLE THAT THE DUCT BANK WILL ROTATE (CORKSCREW) AS IT IS PULLED THRU THE CASING UNLESS AN "OFF CENTER WEIGHT TECHNIQUE", "STABILIZATION CABLES" OR "L" ANGLE & SLOT TECHNIQUE IS USED.
6. THIS BORE SPACER WILL ACCOMMODATE THE "SINGLE-END", "FLUSH COUPLED EXTRACTABLE INJECTION PIPE" OR "STATIONARY SACRIFICIAL INJECTION PIPE" METHODS OF GROUT FILLING.
7. IT IS ESSENTIAL THAT THE BORE SPACERS ARE HELD IN PLACE RELATIVE TO THE CONDUIT. REASON: AS THE GROUT IS PUMPED INTO THE CASING, THE COMPARTMENTS FORMED BETWEEN THE BORE SPACERS ARE MORE OR LESS FILLED SEQUENTIALLY, PLACING A TEMPORARY THRUST LOAD ON EACH BORE SPACER.
8. THE DUCT BANK MUST BE HELD IN POSITION AT BOTH ENDS TO ACCOMMODATE POSSIBLE UNEVEN THRUST LOADS THAT MAY BE GENERATED DURING THE GROUTING OPERATION.
9. WHEN FILLING THE AREA BETWEEN THE CONDUITS AND CASING WITH GROUT, TAKE CARE NOT TO EXCEED THE HYDRAULIC COLLAPSE PRESSURE OF THE CONDUITS.
10. DEPENDING ON THE GROUT SPECIFIC GRAVITY AND GROUT FLOW, IT IS POSSIBLE THAT THE DUCT BANK WILL FLOAT TO THE TOP OF THE CASING.
11. ACTUAL QUANTITY OF GROUT USED SHOULD BE MEASURED AND RECORDED.

DOUBLE WALL, FULL COMPLEMENT BORE SPACER With 8 Ea. 8", 2 Ea. 4" & 2 Ea. 2" RTRC-XHW (Bullet-Resistant, Extra Heavy Wall Fiberglass) Conduits Per NEMA TC-2002 In A 60.000' OD X 2.130 Min. Wall HOBAS (Centrifugally Cast Fiberglass Reinforced Polymer Mortar) Casing

THIS BORE SPACER DESIGN IS COVERED BY ONE OR MORE PENDING PATENT APPLICATIONS. FURTHER, THIS DRAWING AND PROPRIETARY DESIGN IS SOLELY THE PROPERTY OF UNDERGROUND DEVICES, INC AND IS SUBMITTED WITH THE UNDERSTANDING THAT IT WILL BE KEPT IN STRICT CONFIDENCE.

THIS INFORMATION IS BASED ON OUR EXPERIENCE TO DATE AND WE BELIEVE IT TO BE RELIABLE. IT IS INTENDED ONLY AS A GUIDE FOR USE AT YOUR DISCRETION AND RISK. WE CANNOT GUARANTEE FAVORABLE RESULTS AND ASSUME NO LIABILITY IN CONNECTION WITH ITS USE OR USE OF THE PRODUCTS DESCRIBED.

UNDERGROUND DEVICES CATALOG NUMBER: BS4150W4

* PATENT PENDING *

SCALE: 1.000

DWN: See At Left | CHKD: Alan Armstrong | APPD: B.Huehlenbeck | DATE: 7-7-06 | DSGN: Don McCoy

1st Designed For BURNS & MCDONNELL
Kansas City, MO - CHRIS COURTRIGHT - Phone: 816-333-9400

UNDERGROUND DEVICES, INC.
NORTHBROOK, ILLINOIS 60062 - PHONE: (847) 205-9000

DRAWING NUMBER 90-4150
PAGE 1 OF 3

© JULY 7, 2006 - ALL RIGHTS RESERVED BY UNDERGROUND DEVICES, INC. (180)

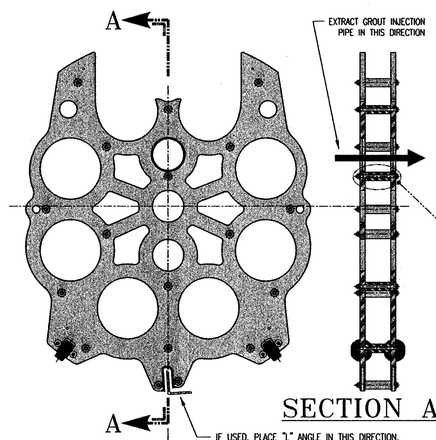

SECTION A-A

BILL OF MATERIAL		
ITEM NUMBER	QTY REQ'D	DESCRIPTION
1	18	3/8-16 HEX NUT (GRADE 2, CENTERLOCK LOCKING NUT, ZINC PLATED STEEL)
2	36	3/8 FLAT WASHER (.438 ID X 1.000 OD X .078 THK, USS STANDARD, ZINC PLATED STEEL)
3	2	UDI 90-4150 BLANK BORE SPACER
4	18	UDI 90-803 SPACER BUSHING (TYPE 1 PVC DARK GRAY)
5	18	3/8-16 X 6" LG HEX HEAD CAP SCREW (GRADE 2, ZINC PLATED LOW CARBON STEEL)

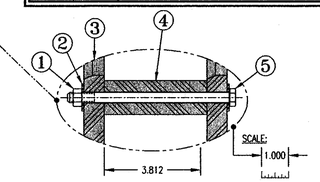

CONDUIT AND HOLE SIZES				
CONDUIT OD		FULL HOLE DIAMETER		PARTIAL HOLE DIAMETER
NOMINAL	ACTUAL	BANDED	NON-BANDED	
2"	2.500	----	2.620	----
4"	4.500	----	4.653	----
8"	8.900	9.015	----	8.920

DOUBLE WALL, FULL COMPLEMENT BORE SPACER With 8 Ea. 8", 2 Ea. 4" & 2 Ea. 2" RTRC-XHW (Bullet-Resistant, Extra Heavy Wall Fiberglass) Conduits Per NEMA TC-2002 In A 60.000' OD X 2.130 Min. Wall HOBAS (Centrifugally Cast Fiberglass Reinforced Polymer Mortar) Casing

THIS BORE SPACER DESIGN IS COVERED BY ONE OR MORE PENDING PATENT APPLICATIONS. FURTHER, THIS DRAWING AND PROPRIETARY DESIGN IS SOLELY THE PROPERTY OF UNDERGROUND DEVICES, INC AND IS SUBMITTED WITH THE UNDERSTANDING THAT IT WILL BE KEPT IN STRICT CONFIDENCE.

THIS INFORMATION IS BASED ON OUR EXPERIENCE TO DATE AND WE BELIEVE IT TO BE RELIABLE. IT IS INTENDED ONLY AS A GUIDE FOR USE AT YOUR DISCRETION AND RISK. WE CANNOT GUARANTEE FAVORABLE RESULTS AND ASSUME NO LIABILITY IN CONNECTION WITH ITS USE OR USE OF THE PRODUCTS DESCRIBED.

UNDERGROUND DEVICES CATALOG NUMBER: BS4150W4

* PATENT PENDING *

SCALE: 1.000

DWN: See At Left | CHKD: Alan Armstrong | APPD: B.Huehlenbeck | DATE: 7-7-06 | DSGN: Don McCoy

1st Designed For BURNS & MCDONNELL
Kansas City, MO - CHRIS COURTRIGHT - Phone: 816-333-9400

UNDERGROUND DEVICES, INC.
NORTHBROOK, ILLINOIS 60062 - PHONE: (847) 205-9000

DRAWING NUMBER 90-4150
PAGE 2 OF 3

© JULY 7, 2006 - ALL RIGHTS RESERVED BY UNDERGROUND DEVICES, INC.

DETAIL No.1

SCALE @ 4X

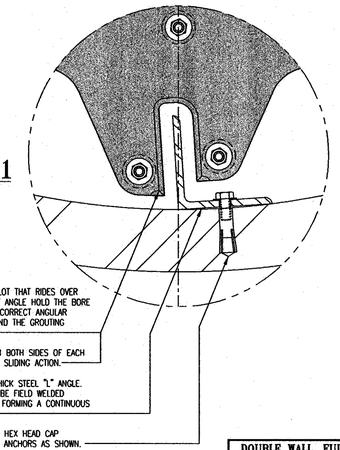

NOTE THAT BORE SPACER HAS A SLOT THAT RIDES OVER THE "L" ANGLE. THIS SLOT & "L" ANGLE HOLD THE BORE SPACERS AND CONDUITS IN THE CORRECT ANGULAR POSITION DURING INSTALLATION AND THE GROUTING OPERATION.

SLOT IS CHAMFERED .094 X 45° ON BOTH SIDES OF EACH BORE SPACER WALL TO ENHANCE SLIDING ACTION.

OPTIONAL 3.500 X 3.500 X .250 THICK STEEL "L" ANGLE. LENGTHS OF "L" ANGLE SHOULD BE FIELD WELDED TOGETHER AND GROUND SMOOTH FORMING A CONTINUOUS RAIL IN THE CASING AS SHOWN.

SECURE "L" ANGLE TO CASING WITH HEX HEAD CAP SCREWS, WASHERS AND DROP-IN ANCHORS AS SHOWN.

DOUBLE WALL, FULL COMPLEMENT BORE SPACER With 8 Ea. 8", 2 Ea. 4" & 2 Ea. 2" RTRC-XHW (Bullet-Resistant, Extra Heavy Wall Fiberglass) Conduits Per NEMA TC-2002 In A 60.000' OD X 2.130 Min. Wall HOBAS (Centrifugally Cast Fiberglass Reinforced Polymer Mortar) Casing

THIS BORE SPACER DESIGN IS COVERED BY ONE OR MORE PENDING PATENT APPLICATIONS. FURTHER, THIS DRAWING AND PROPRIETARY DESIGN IS SOLELY THE PROPERTY OF UNDERGROUND DEVICES, INC AND IS SUBMITTED WITH THE UNDERSTANDING THAT IT WILL BE KEPT IN STRICT CONFIDENCE.

THIS INFORMATION IS BASED ON OUR EXPERIENCE TO DATE AND WE BELIEVE IT TO BE RELIABLE. IT IS INTENDED ONLY AS A GUIDE FOR USE AT YOUR DISCRETION AND RISK. WE CANNOT GUARANTEE FAVORABLE RESULTS AND ASSUME NO LIABILITY IN CONNECTION WITH ITS USE OR USE OF THE PRODUCTS DESCRIBED.

UNDERGROUND DEVICES CATALOG NUMBER: BS4150W4

* PATENT PENDING *

SCALE: 1.000

DWN: See At Left | CHKD: Alan Armstrong | APPD: B.Huehlenbeck | DATE: 7-7-06 | DSGN: Don McCoy

1st Designed For BURNS & MCDONNELL
Kansas City, MO - CHRIS COURTRIGHT - Phone: 816-333-9400

UNDERGROUND DEVICES, INC.
NORTHBROOK, ILLINOIS 60062 - PHONE: (847) 205-9000

DRAWING NUMBER 90-4150
PAGE 3 OF 3

© JULY 7, 2006 - ALL RIGHTS RESERVED BY UNDERGROUND DEVICES, INC.

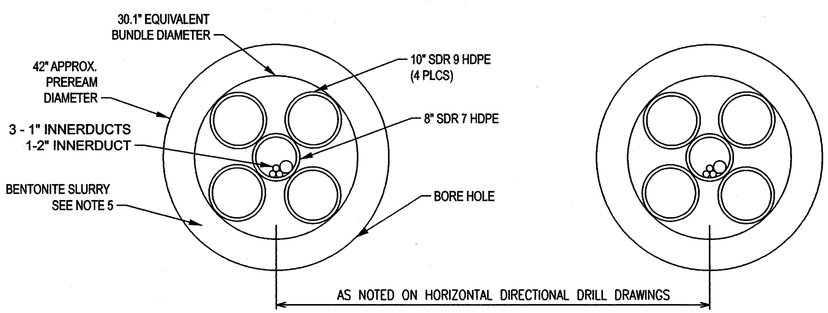

HORIZONTAL DIRECTIONAL DRILL

SECTION A
NTS

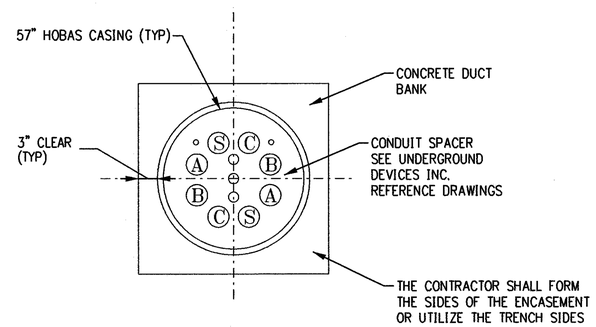

JACK AND BORE

SECTION B
NTS

NOTES:

1. ALL CASING SHALL BE COMPLETELY FILLED WITH A THERMALLY ACCEPTABLE GROUT. GROUT MIX DESIGN SHALL MEET PROJECT SPECIFICATIONS.
2. GROUT SAMPLES SHALL BE SUBMITTED TO THE TEST COMPANY (CONTACT TEST COMPANY FOR APPROPRIATE SIZE & METHOD OF TRANSPORTATION) IN ACCORDANCE WITH THE SPECIFICATIONS.
3. CONTRACTOR SHALL FURNISH AND INSTALL CASING PIPE SPACER. SPACERS SHALL BE INSTALLED A MAXIMUM DISTANCE OF 5 FEET APART. SPACERS SHALL BE INSTALLED PER MANUFACTURES RECOMMENDATIONS.
4. CONTRACTOR SHALL SUBMIT DETAILED DESIGN OF EACH BORED CROSSING FOR REVIEW, INCLUDING AS A MINIMUM WORK PLAN, EQUIPMENT AND MATERIALS TO BE USED, WORK AREAS, BORE PIT SIZES AND LOCATIONS.
5. BENTONITE SLURRY SAMPLES SHALL BE SUBMITTED TO THE TEST COMPANY (CONTACT TEST COMPANY FOR APPROPRIATE SIZE & METHOD OF TRANSPORTATION) IN ACCORDANCE WITH THE SPECIFICATIONS.

STATE OF CONNECTICUT
SCOTT E. NEWLAND
No. 24675
LICENSED
PROFESSIONAL ENGINEER
8/29/06

ISSUED FOR CONSTRUCTION

DOCKET No. 272

no.	date	revisions	by	chk
1	8/29/06	ISSUED FOR CONSTRUCTION	CTC	

Burns & McDonnell SINCE 1898

date 6/15/06 | detailed L. ROWSE
designed C. COURTRIGHT | checked S. NEWLAND

MF	NO.	DATE	REVISIONS	BY	CHK	APP	APP

NORTHEAST UTILITIES SERVICE CO.

FOR THE CONNECTICUT LIGHT & POWER COMPANY

TITLE MIDDLETOWN-NORWALK 345kV TRANSMISSION PROJECT

HORIZONTAL DIRECTIONAL DRILL AND JACK AND BORE SECTIONS

BY SEN-BMCD	CHKD	APP	APP
DATE 6/15/06	DATE	DATE	DATE
SCALE AS NOTED	D	DWG. NO. 01223-46003 PG 006	

COPYRIGHT © 2006 BURNS & McDONNELL ENGINEERING COMPANY, INC.

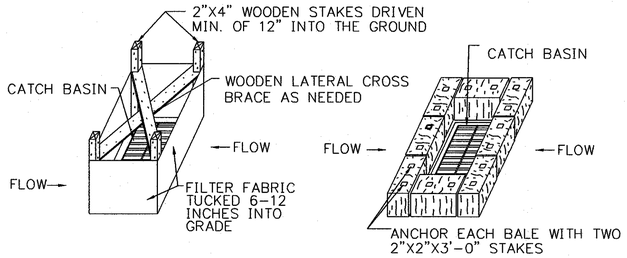

SILT FENCE INSTALLATION AT CATCH BASINS AT LOW POINTS

HAY BALE FILTER INSTALLATION AT CATCH BASIN AT LOW POINTS

STORMWATER INLETS WHICH DO NOT DISCHARGE TO SEDIMENT TRAPS OR BASINS, SHALL BE PROTECTED UNTIL THE TRIBUTARY AREAS ARE STABILIZED.
SEDIMENT SHALL BE REMOVED FROM INLET PROTECTION AFTER EACH STORM EVENT.

CATCH BASIN EROSION CONTROL

DETAIL 1 / ~
NTS

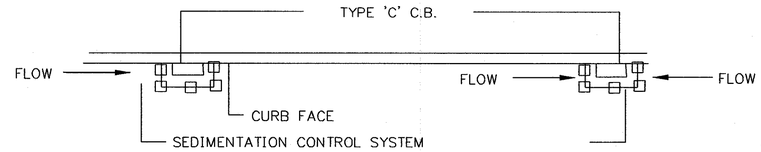

PLAN
FOR TYPE 'C' C.B
(ON GRADE)

PLAN
FOR TYPE 'C' CB
(AT LOW POINT)

NOTE:
SEDIMENTATION CONTROL SYSTEMS SHALL BE LOCATED AT ALL EXISTING OR PROPOSED BASINS WHICH ACCEPT FLOW FROM THE CONSTRUCTION AREA UNTIL TURF ESTABLISHMENT OR AS DIRECTED BY THE ENGINEER.

DETAIL 2 / ~
NTS

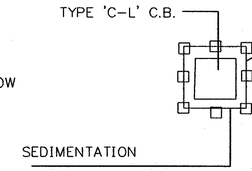

PLAN
FOR TYPE 'C-L' C.B.

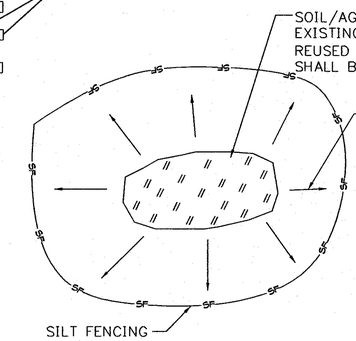

NOTES:
1. ALL EXISTING EXCAVATED MATERIAL THAT IS NOT BEING REUSED IN THE WORK SHALL BE IMMEDIATELY REMOVED FROM THE SITE AND PROPERLY DISPOSED OF.

2. RESTORE STOCKPILE SITES TO PRE-EXISTING PROJECT CONDITION AND RESEED AS REQUIRED.

3. STOCKPILE HEIGHTS SHALL NOT EXCEED 35'. STOCKPILE SLOPES SHALL BE 2:1 OR FLATTER.

MATERIALS STOCKPILE

DETAIL 3 / ~
NTS

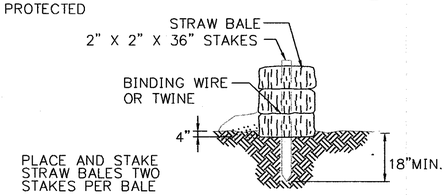

STRAW BALE BARRIERS SHALL NOT BE USED FOR MORE THAN 3 MONTHS

SEDIMENT SHALL BE REMOVED WHEN ACCUMULATIONS REACH 1/3 THE ABOVE GROUND HEIGHT OF THE BARRIER.

ANY SECTION OF STRAW BALE BARRIER WHICH HAS BEEN UNDERMINED OR TOPPED SHALL BE IMMEDIATELY REPLACED WITH A ROCK FILTER OUTLET.

HAYBALE BARRIER

DETAIL 4 / ~
NTS

NOTE:
USE FOR IN-STREAM OR SWALE SEDIMENT INTERCEPTION. LOCATE NOT TO BACKWATER ONTO WORK AREA.

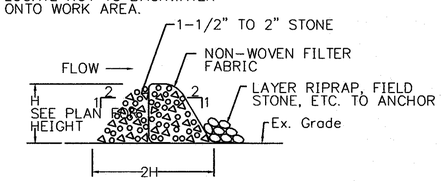

CROSS SECTION

STONE FILTER BERM W/ FILTER FABRIC

DETAIL 5 / ~
NTS

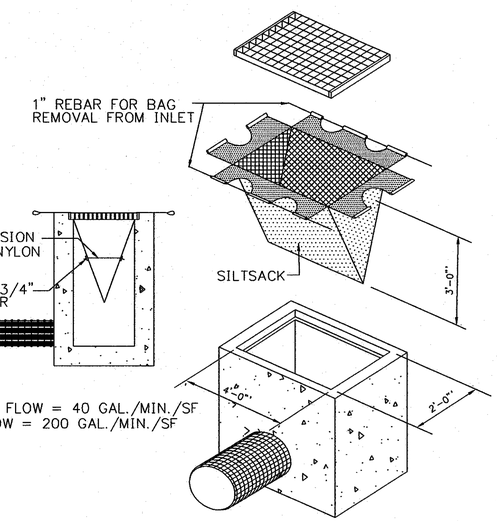

NOTE: REGULAR FLOW = 40 GAL./MIN./SF
HIGH FLOW = 200 GAL./MIN./SF

SILTSACK

DETAIL 9 / ~
NTS

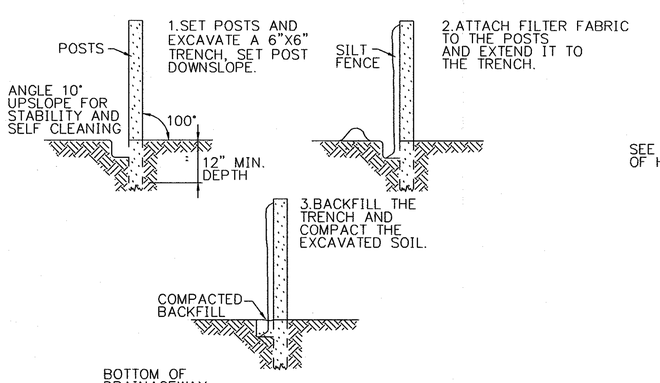

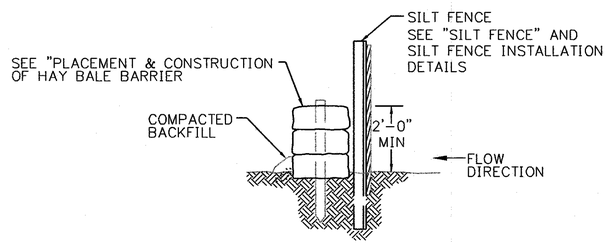

BACKFILL AND COMPACT THE EXCAVATED SOIL AS SHOWN ON THE UPHILL SIDE OF THE BARRIER TO PREVENT PIPING

GEOTEXTILE SILT FENCE BARRIER W/ HAYBALES

DETAIL 7 / ~
NTS

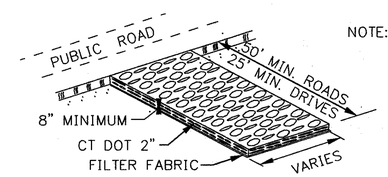

CONSTRUCTION ENTRANCE

DETAIL 8 / ~
NTS

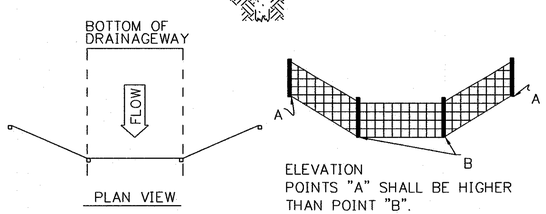

GEOTEXTILE SILT FENCE BARRIER W/OUT HAYBALES

DETAIL 6 / ~
NTS

STATE OF CONNECTICUT
SCOTT E. NEWLAND
No. 24675
LICENSED
PROFESSIONAL ENGINEER
8/29/06

ISSUED FOR CONSTRUCTION

DOCKET No. 272

no.	date	revisions	by	chk
1	8/29/06	ISSUED FOR CONSTRUCTION	CTC	

Burns & McDonnell
SINCE 1898

date 10/11/05
designed BL COMPANIES
detailed BL COMPANIES
checked S. NEWLAND

MF	NO.	DATE	REVISIONS	BY	CHK	APP	APP

NORTHEAST UTILITIES SERVICE CO.

FOR THE CONNECTICUT LIGHT & POWER COMPANY

TITLE MIDDLETOWN-NORWALK 345kV TRANSMISSION PROJECT

EROSION CONTROL DETAILS

BY SEN-BMCD	CHKD	APP	APP
DATE 10-11-05	DATE	DATE	DATE
SCALE AS NOTED	D	DWG. NO. 01223-15003 PG 001	

COPYRIGHT © 2006 BURNS & McDONNELL ENGINEERING COMPANY, INC.

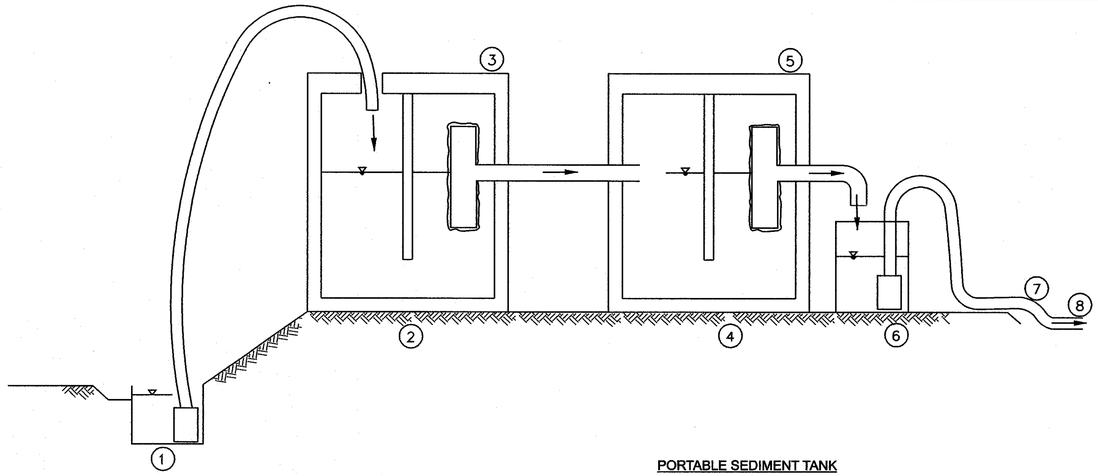

NOTES

1. 20 GPM TRASH PUMP DEWATERS FOUNDATION EXCAVATION
2. MUDDY WATER DISCHARGES TO 1,250 GAL SEPTIC TANK (OR DET. OUTLET STRUCTURE)
3. 4" TEE OUTLET WRAPPED W/ FILTER FABRIC
4. 1,250 GAL CLEAR WELL
5. 2ND 4" TEE OUTLET WRAPPED W/ FILTER FABRIC
6. 2ND PUMP IN 55 GAL DRUM (OR GRAVITY HOSE) DRAINS SYSTEM
7. TEMP. OUTLET TO CATCH BASIN IN STREET
8. 2-1,250 GAL. TANKS = 2,500 GAL. CAPACITY TOTAL

PORTABLE SEDIMENT TANK

DETAIL 1
NTS

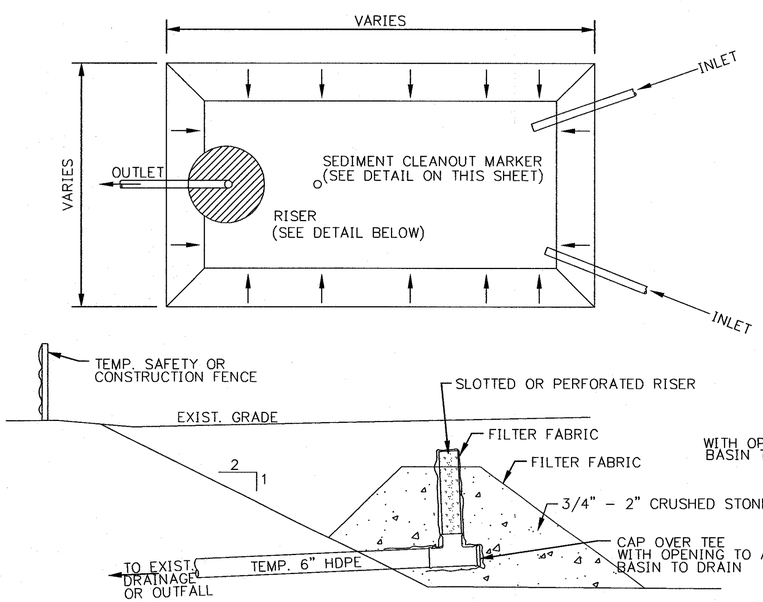

TEMPORARY SEDIMENT TRAP

DETAIL 2
NTS

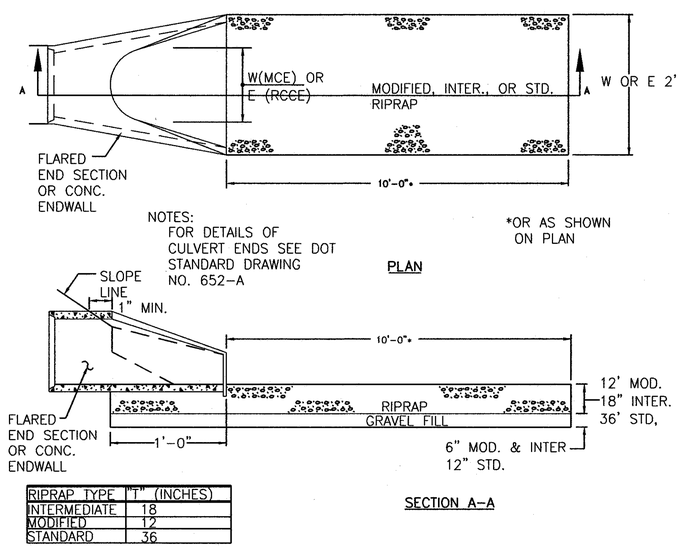

RIPRAP TYPE	"T" (INCHES)
INTERMEDIATE	18
MODIFIED	12
STANDARD	36

LEVEL SPREADER

DETAIL 3
NTS

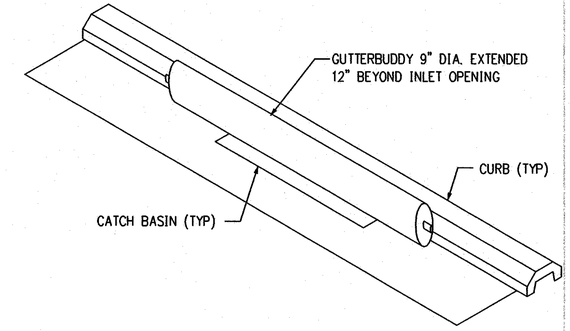

GUTTERBUDDY STORM DRAIN

DETAIL 4
NTS

STATE OF CONNECTICUT
SCOTT E. NEWLAND
No. 24675
LICENSED
PROFESSIONAL ENGINEER
8/24/06

ISSUED FOR CONSTRUCTION

DOCKET No. 272

no.	date	revisions	by	chk
1	8/29/06	ISSUED FOR CONSTRUCTION	CTC	

Burns & McDonnell
SINCE 1898

date 10/11/05
detailed BL COMPANIES
designed BL COMPANIES
checked S. NEWLAND

MF	NO.	DATE	REVISIONS	BY	CHK	APP	APP

NORTHEAST UTILITIES SERVICE CO.

FOR THE CONNECTICUT LIGHT & POWER COMPANY

TITLE MIDDLETOWN-NORWALK 345kV TRANSMISSION PROJECT

EROSION CONTROL DETAILS

BY SEN-BMCD	CHKD	APP	APP
DATE 10-11-05	DATE	DATE	DATE
SCALE AS NOTED	D	DWG. NO. 01223-15003 PG 002	

COPYRIGHT © 2006 BURNS & McDONNELL ENGINEERING COMPANY, INC.

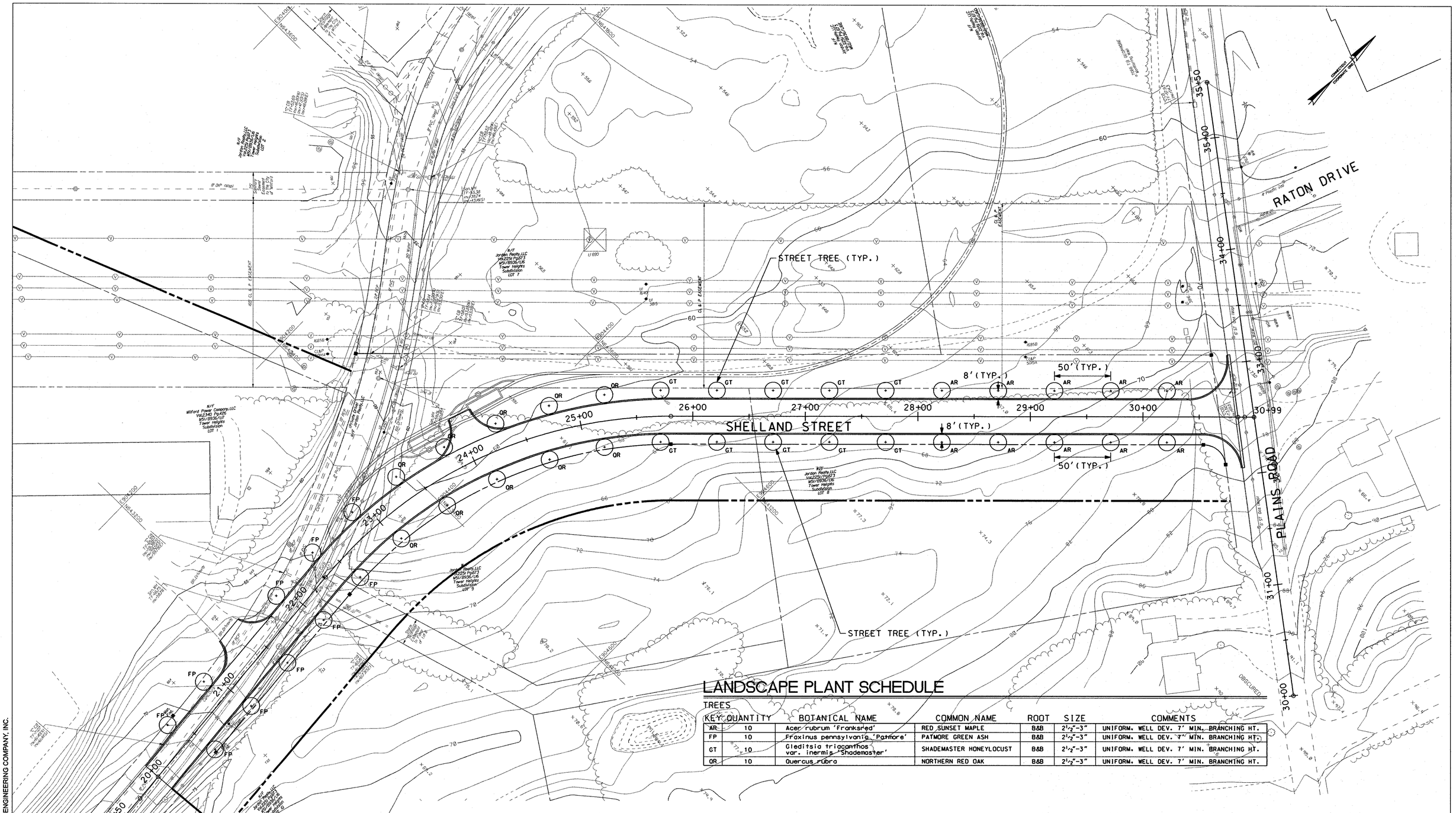

LANDSCAPE PLANT SCHEDULE

TREES

KEY	QUANTITY	BOTANICAL NAME	COMMON NAME	ROOT	SIZE	COMMENTS
AR	10	Acer rubrum 'Franksred'	RED SUNSET MAPLE	B&B	2½"-3"	UNIFORM, WELL DEV. 7' MIN. BRANCHING HT.
FP	10	Fraxinus pennsylvanica 'Patmore'	PATMORE GREEN ASH	B&B	2½"-3"	UNIFORM, WELL DEV. 7' MIN. BRANCHING HT.
GT	10	Gleditsia triacanthos var. inermis 'Shademaster'	SHADEMASTER HONEYLOCUST	B&B	2½"-3"	UNIFORM, WELL DEV. 7' MIN. BRANCHING HT.
OR	10	Quercus rubra	NORTHERN RED OAK	B&B	2½"-3"	UNIFORM, WELL DEV. 7' MIN. BRANCHING HT.

0 40' 80'
SCALE IN FEET

FOR REFERENCE ONLY
NOT FOR CONSTRUCTION

no.	date	revisions	by	chk
1.	8/29/06	ISSUED FOR CONSTRUCTION	B.P.	B.K.

BL Companies
ARCHITECTURE
ENGINEERING
PLANNING
LANDSCAPE ARCHITECTURE
LAND SURVEYING
ENVIRONMENTAL SCIENCES
355 Research Parkway
Meriden, CT 06450
800.301.3077
www.blcompanies.com

date 08/08/06
designed
detailed
checked

MF	NO.	DATE	REVISIONS	BY	CHK	APP	APP

NORTHEAST UTILITIES SERVICE CO.

FOR THE CONNECTICUT LIGHT & POWER COMPANY

TITLE MIDDLETOWN–NORWALK 345kV TRANSMISSION PROJECT

CITY OF MILFORD
LANDSCAPE PLAN

BY B.J.P.-BL	CHKD	APP	APP
DATE 08/08/06	DATE	DATE	DATE
SCALE AS NOTED	D	DWG. NO. LL-01	

COPYRIGHT © 2006 BURNS & McDONNELL ENGINEERING COMPANY, INC.

GENERAL NOTES

1. A) THIS MAP HAS BEEN PREPARED IN ACCORDANCE WITH THE REGULATIONS OF CONNECTICUT STATE AGENCIES, SECTIONS 20-300b-1 THROUGH 20-300b-20 AND THE "STANDARDS FOR SURVEYS AND MAPS IN THE STATE OF CONNECTICUT" AS ADOPTED BY THE CONNECTICUT ASSOCIATION OF LAND SURVEYORS, INC. ON SEPTEMBER 26, 1996.

   B) THIS PLAN CONFORMS TO HORIZONTAL ACCURACY CLASS A-2.

   C) BOUNDARY DETERMINATION OF THE NEW LOT LINES IS BASED UPON AN ORIGINAL SURVEY. BOUNDARY DETERMINATION OF THE EXISTING RIGHT OF WAY AND PERIMETER PROPERTY LINES BASED UPON A DEPENDENT RESURVEY OF MAP REFERENCE 4A.

   D) THE TYPE OF SURVEY PERFORMED IS A RESUBDIVISION MAP AND IS INTENDED TO DEPICT THE POSITION OF THE NEW BOUNDARIES WITH RESPECT TO MONUMENTATION FOUND, EASEMENTS, ENCROACHMENTS, STRUCTURES AND ROADWAYS.

2. NORTH ARROW AND BEARINGS BASED ON MAP REFERENCE 4A AND REFER TO NAD 83.

3. THE UNDERGROUND UTILITIES SHOWN HAVE BEEN LOCATED FROM FIELD SURVEY INFORMATION AND EXISTING DRAWINGS. THE SURVEYOR MAKES NO GUARANTEES THAT THE UNDERGROUND UTILITIES SHOWN COMPRISE ALL SUCH UTILITIES IN THE AREA, EITHER IN SERVICE OR ABANDONED. THE SURVEYOR FURTHER DOES NOT WARRANT THAT THE UNDERGROUND UTILITIES SHOWN ARE IN THE EXACT LOCATION INDICATED THOUGH THEY ARE LOCATED AS ACCURATELY AS POSSIBLE FROM INFORMATION AVAILABLE. THE SURVEYOR HAS NOT PHYSICALLY LOCATED THE UNDERGROUND UTILITIES. THE CONTRACTOR SHALL CONFIRM THE LOCATION OF ALL UTILITIES PRIOR TO THE COMMENCEMENT OF EXCAVATION.

4. REFERENCE IS MADE TO THE FOLLOWING MAP:
   A. "SUBDIVISION MAP TOWER HEIGHTS SUBDIVISION PREPARED FOR JORDAN REALTY, LLC SHELLAND STREET MILFORD, CONNECTICUT" DATE 2/13/98 REV. 2/5/99 SCALE 1"=100' SHEET 2 PREPARED BY CODESPOTI & ASSOCIATES P.C. AND RECORDED IN THE MILFORD CLERKS OFFICE AS MAP #AB2472.

LEGEND

- Proposed R.O.W. Line
- Existing Property Line
- Easement Line
- Utility Pole
- Utility Pole W/ Light

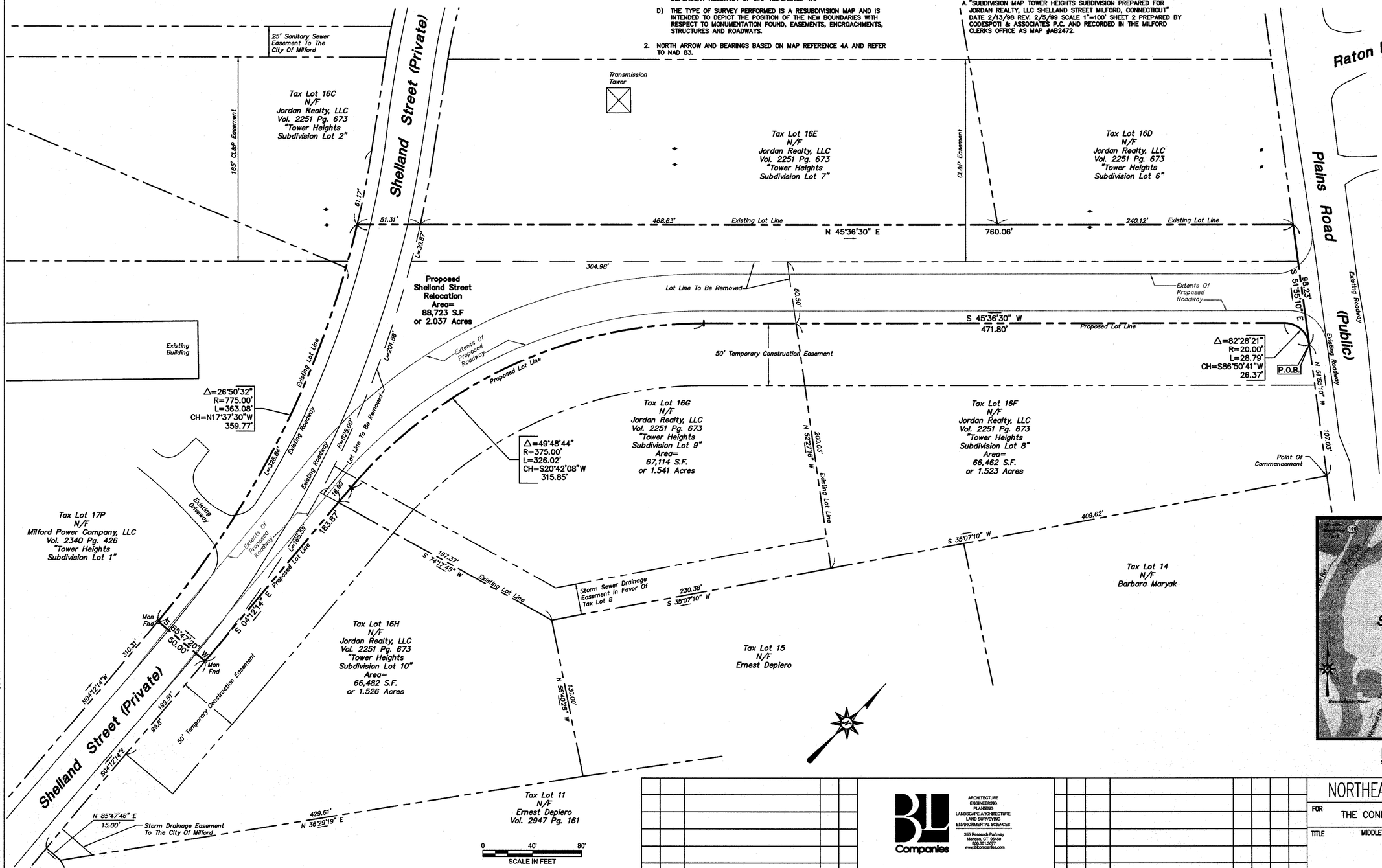

FOR REFERENCE ONLY
NOT FOR CONSTRUCTION

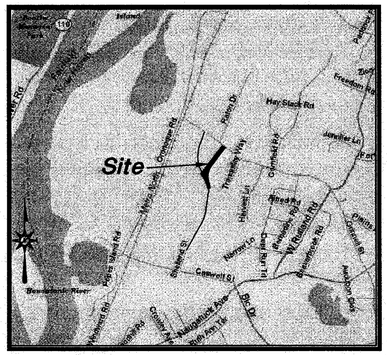
Site
Hay Stack Rd
Jennifer Ln
Freedom Rd
Gulf Rd
Bryan Dr
Thompson Rd
Oakhill Rd
Hillside Ln
Ridge Rd
Pleasant Rd
W Rutland Rd
Harper Ln
Carroll Rd
Bailey Dr
Cherry St
Naugatuck River
Naugatuck Ave
Bridgeport Ave
Boston Post Rd
Milford Rd
Plains Road
Raton Drive
Shelland Rd
Oronoque Rd
Melba St
Merwin Ave
Wheelers Farms Rd
Gulf St
Cherry St
Bridgeport Ave
Naugatuck

NOTES

1. THE PROPOSED SANITARY SEWER SYSTEM SHALL BE CONSTRUCTED TO THE LIMITS AND DEPTHS AS SHOWN ON THE PLANS. IF, DURING CONSTRUCTION, CONFLICTS ARISE BETWEEN EXISTING AND PROPOSED INVERTS, EXISTING INVERTS SHALL BE HELD UNLESS OTHERWISE DIRECTED BY THE ENGINEER.

2. SEE SHEET NO. DRN-01 AND PRO-02 FOR TRUNKLINE LAYOUT PLAN AND PROFILE RESPECTIVELY.

100'-24" RCP @ S=0.50%

MANHOLE STA. 23+50.00 12' LT RIM = 61.16 INV.= 54.08 (IN) INV.= 53.58 (OUT)

128'-18" RCP @ S=0.50%

RESET MANHOLE (SAN. SEWER) STA. 23+64.50 105.1' LT RIM = 59.80 INV.= 50.85 (IN)

88'-8" PVC (SAN. SEWER) @ S=0.50%

SEE NOTE 2

MANHOLE (SAN. SEWER) STA. 25+00.00 56.9' LT RIM = 62.80 INV.= 51.29 (IN & OUT)

54'-8" PVC (SAN. SEWER) @ S=0.50%

MANHOLE (SAN. SEWER) STA. 23+00.00 RIM = 62.78 INV.= 51.56 (IN & OUT)

TYPE "C" C.B. OVER 10' DEEP STA. 22+50.00 15' LT T.F.= 63.90 INV.= 59.20 (E) INV.= 53.08 (N) INV.= 53.08 (W)

122'-8" PVC (SAN. SEWER) @ S=5.92%

CONVERT C.B. TO M.H. T.F.= 65.50

RESET TYPE "C" C.B. T.F.= 71.07 INV.= 66.58 (PROP.)

TYPE "C" C.B. STA. 20+25.50 15' RT T.F.= 71.07 INV.= 66.82 (OUT)

28'-12" RCP @ S=1.00%

MANHOLE (SAN. SEWER) STA. 24+00.00 RIM = 60.47 INV.= 52.04 (IN & OUT)

TYPE "C" C.B. DOUBLE GRATE - TYPE II STA. 24+80.47 15' LT T.F.= 59.41 INV.= 55.22 (NE) INV.= 54.97 (SE) INV.= 54.97 (SW)

168'-15" RCP @ S=1.50%

96'-8" PVC (SAN. SEWER) @ S=0.50%

28'-18" RCP @ S=1.00%

TYPE "C" C.B. STA. 22+50.00 15' RT T.F.= 63.90 INV.= 59.44 (IN & OUT)

28'-15" RCP @ S=1.00%

MANHOLE STA. 22+25.00 32' RT RIM = 67.50 INV.= 61.24± (EXIST.) INV.= 59.72 (OUT)

RESET MANHOLE (SAN. SEWER) STA. 21+76.00 9.6' LT RIM = 66.55 PROP. INV.= 58.78 (OUT)

TYPE "C" C.B. STA. 26+50.00 15' LT T.F.= 61.96 INV.= 57.71 (IN & OUT)

196'-8" PVC (SAN. SEWER) @ S=1.50%

MANHOLE (SAN. SEWER) STA. 27+50.00 RIM = 65.44 INV.= 55.73 (IN & OUT)

296'-15" RCP @ S=3.00%

MANHOLE (SAN. SEWER) STA. 25+50.00 2' LT RIM = 60.33 INV.= 52.77 (IN & OUT)

TYPE "C" C.B. STA. 26+50.00 15' RT T.F.= 61.96 INV.= 57.95 (OUT)

28'-18" RCP @ S=1.00%

TYPE "C" C.B. DOUBLE GRATE - TYPE II STA. 24+80.47 15' RT T.F.= 59.41 INV.= 55.21 (OUT)

146'-8" PVC (SAN. SEWER) @ S=0.50%

28'-12" RCP @ S=1.00%

TYPE "C" C.B. STA. 29+50.00 15' LT T.F.= 70.96 INV.= 66.59 (IN) INV.= 66.34 (OUT)

68'-12" RCP (EXTEND @ EXISTING SLOPE)

TYPE "C" C.B. STA. 32+10.00 16.6' LT T.F.= 78.83 INV.= 73.48± (OUT)

28'-12" RCP @ S=1.00%

TYPE "C" C.B. STA. 29+50.00 15' RT T.F.= 70.96 INV.= 66.83 (OUT)

296'-8" PVC (SAN. SEWER) @ S=3.00%

MANHOLE (SAN. SEWER) STA. 30+50.00 RIM = 74.44 INV.= 64.64 (OUT)

SHELLAND STREET

RATON DRIVE

PLAINS ROAD

19+50 20+00 21+00 22+00 24+00 25+00 26+00 27+00 28+00 29+00 30+00 30+99 31+00 32+00 33+00 34+00 35+00 35+50

0 40' 80'
SCALE IN FEET

FOR REFERENCE ONLY
NOT FOR CONSTRUCTION

LEGEND

- SEDIMENTATION CONTROL SYSTEM AT CATCH BASIN
- SEDIMENTATION CONTROL SYSTEM
- UTILITY POLE (BY OTHERS)
- OVERHEAD ELECTRIC LINE (BY OTHERS)
- 20" WATER MAIN (BY OTHERS)
- 4" GAS MAIN (BY OTHERS)

no.	date	revisions	by	chk
1.	8/29/06	ISSUED FOR CONSTRUCTION	B.P.	B.K.

BL Companies
ARCHITECTURE ENGINEERING PLANNING LANDSCAPE ARCHITECTURE LAND SURVEYING ENVIRONMENTAL SCIENCES
355 Research Parkway Meriden, CT 06450 800.301.3077 www.blcompanies.com

date 08/08/06 | detailed
designed | checked

MF	NO.	DATE	REVISIONS	BY	CHK	APP	APP

NORTHEAST UTILITIES SERVICE CO.

FOR THE CONNECTICUT LIGHT & POWER COMPANY

TITLE MIDDLETOWN-NORWALK 345kV TRANSMISSION PROJECT

CITY OF MILFORD
UTILITY PLAN

BY B.J.P.-BL	CHKD	APP	APP
DATE 08/08/06	DATE	DATE	DATE
SCALE AS NOTED	D	DWG. NO. UTL-01	

COPYRIGHT © 2006 BURNS & McDONNELL ENGINEERING COMPANY, INC.